This is a digital copy of a book that was preserved for generations on library shelves before it was carefully scanned by Google as part of a project to make the world's books discoverable online.

It has survived long enough for the copyright to expire and the book to enter the public domain. A public domain book is one that was never subject to copyright or whose legal copyright term has expired. Whether a book is in the public domain may vary country to country. Public domain books are our gateways to the past, representing a wealth of history, culture and knowledge that's often difficult to discover.

Marks, notations and other marginalia present in the original volume will appear in this file - a reminder of this book's long journey from the publisher to a library and finally to you.

Usage guidelines

Google is proud to partner with libraries to digitize public domain materials and make them widely accessible. Public domain books belong to the public and we are merely their custodians. Nevertheless, this work is expensive, so in order to keep providing this resource, we have taken steps to prevent abuse by commercial parties, including placing technical restrictions on automated querying.

We also ask that you:

+ *Make non-commercial use of the files* We designed Google Book Search for use by individuals, and we request that you use these files for personal, non-commercial purposes.

+ *Refrain from automated querying* Do not send automated queries of any sort to Google's system: If you are conducting research on machine translation, optical character recognition or other areas where access to a large amount of text is helpful, please contact us. We encourage the use of public domain materials for these purposes and may be able to help.

+ *Maintain attribution* The Google "watermark" you see on each file is essential for informing people about this project and helping them find additional materials through Google Book Search. Please do not remove it.

+ *Keep it legal* Whatever your use, remember that you are responsible for ensuring that what you are doing is legal. Do not assume that just because we believe a book is in the public domain for users in the United States, that the work is also in the public domain for users in other countries. Whether a book is still in copyright varies from country to country, and we can't offer guidance on whether any specific use of any specific book is allowed. Please do not assume that a book's appearance in Google Book Search means it can be used in any manner anywhere in the world. Copyright infringement liability can be quite severe.

About Google Book Search

Google's mission is to organize the world's information and to make it universally accessible and useful. Google Book Search helps readers discover the world's books while helping authors and publishers reach new audiences. You can search through the full text of this book on the web at `http://books.google.com/`

Digitized by Google

HARVARD UNIVERSITY
GRADUATE SCHOOL
OF BUSINESS
ADMINISTRATION
BAKER LIBRARY

Digitized by Google

Digitized by Google

Digitized by Google

DICTIONARY

OF

ARTS, MANUFACTURES, AND MINES.

VOL. I.

Digitized by Google

LONDON
PRINTED BY SPOTTISWOODE AND CO.
NEW-STREET SQUARE

Digitized by Google

URE'S DICTIONARY

OF

ARTS, MANUFACTURES, AND MINES

CONTAINING A

CLEAR EXPOSITION OF THEIR PRINCIPLES AND PRACTICE

EDITED BY ROBERT HUNT, F.R.S.

Keeper of Mining Records
Formerly Professor of Physics, Royal School of Mines, &c. &c.

ASSISTED BY NUMEROUS CONTRIBUTORS EMINENT IN SCIENCE AND FAMILIAR WITH MANUFACTURES

Illustrated with nearly 2,000 Engravings on Wood

Andrew Ure

SIXTH EDITION, CHIEFLY REWRITTEN AND GREATLY ENLARGED

IN THREE VOLUMES—VOL. I.

LONDON
LONGMANS, GREEN, AND CO.
1867

The right of translation is reserved

Digitized by Google

Oct. 30, 1924

R.22
475
1867
v.1

3 vols
Dixie
Aug 24

Digitized by Google

PREFACE

TO

THE SIXTH EDITION.

SINCE the publication of the fifth edition of this DICTIONARY in 1860, many additions have been made to our knowledge, and some very important applications of Science have taken their place amongst the established manufactures of this and other countries. The beautiful series of Aniline Dyes have, since that date, been fully developed. Several other tinctorial agents have also, by the industry of chemists, been introduced and adopted by the manufacturer. The production of Paraffine Oils from the cannel coal and bituminous shales of the North Wales and other coal fields, may be regarded as almost a new industry. Machinery has been introduced to relieve man from the terrible labour of puddling iron, and in many Iron works is now in successful operation. The labour of "getting" coal, which is, under many conditions, of the most trying nature, has also been assisted by "Coal-cutting Machines" of great ingenuity, many of which are now used in our collieries. Attention has been forcibly directed to the importance of providing a means for determining the presence of, and the quantity accumulating in any part of a coal mine of, the destructive fire-damp. The "Fire-damp Indicator" has been invented, and it must be regarded as one of the most interesting of the applications of Science—as it promises to be one of the most valuable.

All these and many other equally important discoveries and inventions, will be found fully described in this edition. The articles on Artillery and Fire Arms have been rearranged, and much new matter added to them.

The utmost care has been taken to learn of any improvements in any of the Arts and Manufactures, or in the operations of Mining. The article on the Dressing of Ores has been rendered very complete; especial attention has been given to every variety of Mining machinery; and every change introduced, the value of which has been proved, will be, it is believed, found described in the following pages.

The experience gained since the publication of the last edition of this Dictionary, has taught me more thoroughly the requirements of

Digitized by Google

those who have adopted it as a general book of reference. In preparing, therefore, this edition, it has been thought desirable to include some sufficient notice of every material known to enter into any process of manufacture; and of some, which although not at present employed, appear likely to prove valuable within a short time. Some hundreds of articles are described in this, which were not noticed in the previous editions.

Beyond these few remarks it is only necessary to state that great care has been observed in correcting these volumes; the original articles having been, in nearly every case, submitted to the authors of them, and in many instances subjected to rearrangement. The latest authorities have been consulted on each subject, and thus, it is hoped, the most recent and the best information secured. No labour has therefore been spared to render the articles in these volumes strictly reliable and generally useful.

In concluding my labours, I have the satisfaction of feeling, whatever may be the verdict of the public as it regards the general merits of the Dictionary, that I have conscientiously sought to secure the means necessary for rendering it a useful work of reference to all who are concerned or interested in the ARTS, MANUFACTURES, or MINES.

ROBERT HUNT.

9th April 1867.

Digitized by Google

PREFACE

TO

THE FIFTH EDITION.

It may appear to those who are familiar with the former Editions of Dr. Andrew Ure's Dictionary of Arts, Manufactures, and Mines, that but few words are necessary for the Introduction to a new issue of a work which is so well known to the public. If the present Edition appeared under the ordinary circumstances of a reprint,—with modern discoveries, and new applications added,—little would have been required in the way of preface. Such, however, is not the case, for, although this Dictionary is based on, bears the name of, and is in style and intention similar to, the production by Dr. Ure, it cannot but be regarded, from the extent of original matter which has been introduced, as a new publication.

Dr. Andrew Ure's Dictionary of Arts, Manufactures, and Mines, has, during many years, occupied a very important position in, what may be termed, the Commercial Literature of England.

There were few men more familiar with the applications of Science, and the details of all those Arts and Manufactures which involved the discoveries of Chemistry, than the late Dr. Ure. Perhaps no man was more frequently consulted upon questions of patent right, or concerned in experiments which had for their objects the removal of difficulties in the processes which the laboratory had given to the manufactory. With these advantages, superadded to such as naturally belong to a comprehensive mind, trained with much industry in habits of close observation, it could scarcely be otherwise than that a work of a technological character produced by such a man should reach a high standard of excellence.

Many of the most eminent amongst the living men of science, look back with feelings of affection to the days when, commencing their studies, they were guided by the clear light shed upon their paths by Ure's *Dictionary of Chemistry*. This science, since the fourth Edition of that work (the Edition now before me) was published in 1831, has completely changed its character. One vast division — that of organic chemistry — having been indeed created within the thirty years which have elapsed, and the theory of chemical combination having been

Digitized by Google

established upon a more philosophic basis. Consequently the features of any new Edition of that work must present an entire change, and to the young chemist of the modern school the original must necessarily wear an unsatisfactory aspect. There is, however, one feature in connexion with the original Dictionary of Chemistry of Ure, which it is desirable to see repeated in all our modern works on that, or any other, branch of science. A peculiarly lucid style distinguished all the articles which proceeded from the pen of Dr. Ure in those days, and many of the essays, devoted to physico-chemical science, are worthy of preservation, as examples, from which writers on similar subjects might learn to reach that clearness of expression united with elegance of diction which distinguishes them, but which is exceedingly rare in this class of literature at present.

The *Dictionary of Chemistry* slid by degrees into the more comprehensive book, the *Dictionary of Arts, Manufactures, and Mines*, which became the original of several similar works in this country, in France, and in Germany. During the lifetime of Dr. Ure the latter book passed through four editions, all of which have been found to be eminently useful to the manufacturer, the man of business, and the student of technology. In consequence of an arrangement made with Messrs. Newton and Son, of Chancery Lane, we are enabled to retain much valuable matter extracted by Dr. Ure for his last edition from a Series of Essays first published in 'Newton's London Journal of Arts.' The extracts, relating in great part to novelties of an interesting and useful nature displayed in the Great Exhibition of the Industry of all Nations, will be found included under the following heads, viz.: Alum, Beer, Citric Acid, Clay, Envelopes, Glass, Knife-cleaning Machines, Matting, Meats Preserved, Nickel, Oxalic Acid, Paging Machines, Printing and Numbering Cards, Sand, Soap, Sulphuric Acid, Tartaric Acid, and White Lead.

A careful examination of this work, after the death of Dr. Ure, proved that the shackles of age had, to some extent, prevented his embracing all those applications of science which have been made with most rapid strides within the last few years. Consequently, the publishers, resolved to spare nothing which should contribute towards maintaining the usefulness of this work, committed it to my care, fully entertaining the view that competent writers should be engaged, to furnish articles on those special industries which they have made the subject of their particular study.

From an examination of the list of contributors it will be seen, that in many instances the highest authorities—men whose original investigations have contributed to support the dignity of British science—have written articles for the present Edition. Indeed, it has been my earnest endeavour to obtain, upon every branch in each of the three divisions of this Dictionary, the most efficient aid, and to gather information upon every subject, from the most reliable sources.

Digitized by Google

For the zealous and really kind manner in which assistance has been afforded I am bound to express my obligations. But for this friendly cooperation the task of producing the present work would have been infinitely more laborious than it has proved to be. To the living I can only use general terms of thanks, since any selection would be unjust, where all have shown so large an amount of earnestness.

Death has, however, removed from the list of our fellow labourers, while the printers have been engaged on this work, three friends to whose names a few words may be allowed, and to whose memory some tribute is due.

There was no one from whom I counted for more assistance in all that related to the applications of chemical science, than from Henry M. Witt. A few articles from the pen of that young chemist appear in these volumes, and had not his too sensitive mind given way under the unfortunate circumstances in which it had pleased Providence to place him, there can be no doubt but he would have achieved honours in the path he had chosen. T. H. Henry, whom we have also lost, and whose loss is deeply regretted, was a chemist of longer standing, and consequently better known — especially for the correctness of his analytical investigations, and his perfect knowledge of metallurgical chemistry. Herbert Mackworth, one of Her Majesty's Inspectors of Collieries, came to his early end, no doubt, from the zeal which led him, in the practice of his professional duties, into badly-ventilated mines. He was a man ever anxious to improve the condition of the working miner, and to relieve him, as far as possible, from those disastrous accidents which are so fatal to this industrious class. From him I obtained valuable assistance,—beyond that which is indicated by his initials,—on various points connected with engineering as applied to our subterranean operations.

A few words on the plan of the present work. As in the former editions, the mere handicrafts were not included, so in this, they have, unless where they possess more than ordinary interest, been omitted, as it was not possible without greatly extending the work to comprehend them.

The objects which have been steadily kept in view are the following:—To furnish a work of reference on all points connected with the subjects included in its design, which should be of the most reliable character. To give to the scientific student and the public the most exact details of those manufactures which involve the application of the discoveries of either physics or chemistry. To include so much of science as may render the philosophy of manufacture at once intelligible, and enable the technical man to appreciate the value of abstruse research. To include such commercial information as may guide the manufacturer, and fairly represent the history and the value of such Foreign and Colonial productions as are imported in the raw condition. To present to the public, without much elaboration, a sufficiently copious description of the Arts we cultivate, of the Manufactures for which we are distin-

Digitized by Google

guished, and of those Mining and metallurgical operations which are so preeminently of native growth, including at the same time a sufficiently detailed account of the industries of other states.

The greatest care has been taken to render all the cross-references as complete as possible, without putting the reader to the vexatious process of hunting to and fro amongst the pages, for the information for which he seeks. It is hoped that the Dictionary will be found to answer the great end of such a work, and that the facts in which it deals may be found with facility. For all those articles which have not initial letters indicating the authors' names, I am entirely responsible. Of these, a few have been reprinted without much alteration from the former edition; but by far the larger number have been written by me, after having obtained the fullest information from the best authorities. I have never hesitated to take fresh knowledge from any source, — but if I have omitted to acknowledge the source, the neglect is unintentional.

I commenced the New Edition of Ure's Dictionary with an earnest determination to render the work as complete and as correct as it was possible for me to make it. I soon became conscious of my imperfect knowledge of many subjects embraced within the scheme, — and even after having laboured to acquire that knowledge from books, I often found there was still a want. In my necessities I have asked the aid of the manufacturer, and the advice of the man of science — and never having been refused the information solicited, I am led to hope that those who may possess these volumes will find in them more practical knowledge than exists in any work of a similar character. For this they are indebted to the liberal feeling which marks the great manufacturers of England, and distinguishes her men of science. With these remarks my labours are committed to the public — trusting that their verdict will be, that I have used my abilities and my industry so as to produce a Dictionary of Arts, Manufactures, and Mines which will be found practically useful to all who are engaged in these special divisions of human industry, and prove valuable as a book of reference to every inquirer.

ROBERT HUNT.

Mining Record Office, Museum of Practical Geology:
August 1860.

Digitized by Google

LIST OF THE CONTRIBUTORS.

General Editor.—ROBERT HUNT, F.R.S. F.S.S.

KEEPER OF MINING RECORDS, ETC.

W. C. AITKIN, Esq.
Birmingham.

G. ANSELL, Esq., Royal Mint.

H. K. BAMBER, Esq., F.C.S., &c.

H. BAUERMANN, Esq., F.G.S.
Author of the Catalogue of Mining Models, &c., Museum of Practical Geology.

E. W. BINNEY, Esq., F.G.S., &c.,
Manchester.

H. W. BONE, Esq.
Enameller.

HENRY. W. BRISTOW, Esq., F.G.S.
Author of *Glossary of Mineralogy*. Geological Survey of Great Britain.

R. J. COURTNEY, Esq.
Superintendent of Messrs. Spottiswoode and Co.'s Printing Office.

JAMES DAFFORNE, Esq.
Assistant Editor of the *Art Journal*.

JOHN DARLINGTON, Esq.
Mining Engineer, Author of *Miner's Handbook*.

(*The late*) F. W. FAIRHOLT, Esq.,
F.R.A.S., Author of *Costume in England, Dictionary of Terms in Art*, &c.

E. FRANKLAND, Esq., Ph.D., F.R.S.,
and C.S. Professor of Chemistry at Royal School of Mines, and Lecturer on Chemistry at the Royal Indian Military College, Addiscombe.

ALFRED FRYER, Esq.
Sugar Refiner, Manchester.

(*The late*) T. H. HENRY, Esq., F.R.S.
and C.S.

R. HERRING, Esq.
Author of *History of Paper Manufacture*.

JAMES HIGGINS, Esq.
Calico Printer, &c, Manchester.

W. HERAPATH, Esq., M.D., &c.

SAMUEL HOCKING, Esq., C.E.
Camborne, Cornwall.

RICHARD W. HUNT, Esq.
Brewer, Leeds.

T. B. JORDAN, Esq.
Engineer, Inventor of Wood Carving Machinery.

JAMES JORDAN, Esq.
Assistant in Mining Record Office, Museum of Practical Geology.

(*The late*) WILLIAM LINTON, Esq.
Artist, Author of *Ancient and Modern Colours*.

JAMES Mc ADAM, Jun., Esq.
Late Secretary of the Royal Society for the Cultivation of Flax in Ireland.

(*The late*) HERBERT MACKWORTH,
Esq., C.E., F.G.S., one of H.M. Inspectors of Coal Mines.

HENRY MARLES, Esq. L.R.C.P.
Author of *English Grammar*; *Currying and Leather*.

DAVID MORRIS, Esq., of Manchester.
Author of *Cottonopolis*, &c.

JAMES NAPIER, Esq., F.C.S.
Author of *Manual of Dyeing, Electro-Metallurgy, Ancient Works in Metal*, &c.

D. NAPIER, Esq., C.E. &c.

(*The late*) A NORMANDY, Esq., M.D.,
F.C.S. Author of *Handbook of Commercial Chemistry*.

HENRY M. NOAD, Esq., Ph.D., F.R.S.
Author of *A Manual of Electricity*, &c.

AUGST. B. NORTHCOTE, Esq., F.C.S.
Assistant Chemist, University of Oxford.

ROBERT OXLAND Esq., F.C.S.
One of the Authors of *Metals and their Alloys*.

THOMAS JOHN PEARSALL, Esq.,
F.C.S. Secretary to London Mechanics' Institution.

SEPTIMUS PIESSE, Esq
Author of *Treatise on Art of Perfumery*, &c.

Digitized by Google

JOHN ARTHUR PHILIPS, Esq.
Graduate of the Imperial School of Mines, Paris, Author of *Manual of Metallurgy*.

ANDREW CROMBIE RAMSAY, Esq.
F.R.S. and G.S., Professor of Geology, Government School of Mines, Local Director of the Geological Survey of Great Britain.

T. A. READWIN Esq., F.G.S.
Salford, Manchester.

(*The late*) EBENEZER ROGERS, C.E.,
F.G.S., late President of the South Wales Institute of Engineers.

F. W. RUDLER, Esq.
Assistant Curator, Museum of Practical Geology.

CHARLES SANDERSON, Esq., Sheffield, Author of Papers on *Steel and Iron*.

E. SCHUNK, Esq., Ph.D., F.R.S. and C.S.

R. ANGUS SMITH, Esq., Ph.D., F.R.S.
Author of various Papers on *Air and Water*, *Life of Dalton*, and *History of Atomic Theory*, &c.

WARINGTON W. SMYTH, Esq., M.A.,
F.R.S., and G.S., Professor of Mining and Mineralogy, Government School of Mines, and Inspector of Crown Mines.

THOMAS SOPWITH, Esq, C.E., F.R.S.,
and G.S., Author of *Isometrical Drawing*, &c.

(*The late*) ROBERT DUNDAS THOMSON, Esq., M.D., F.R.S. Professor of Chemistry in St. Thomas's Hospital College.

ALFRED TYLOR Esq., F.G.S.
Author of *Treatise on Metal Work*.

A. VOELCKER, Esq., Ph.D., F.C.S.
Professor of Chemistry, Agricultural College, Cirencester, and Consulting Chemist to the Royal Agricultural Society of England.

CHARLES V. WALKER, Esq., F.R.S.,
F.R.A.S., Engineer of Telegraphs and Time to the South Eastern Railway Company, Author of *Electrotype Manipulation*, Translator of *Kæmtz' Meteorology*, *De la Rive's Electricity*, &c.

C. GREVILLE WILLIAMS, Esq.
Author of *A Handbook of Chemical Manipulation*, &c.

WM. MATTIEU WILLIAMS, Esq.
Caergwrle, North Wales.

(*The late*) HENRY M. WITT, Esq, F.C.S.
Assistant Chemist, Government School of Mines.

With special assistance and information from the late Sir Wm. Reid. C.B., Governor of Malta; Sir Wm. Armstrong, C.E., &c.; Robert Mallet, Esq., C.E., F.R.S., &c.; Captain Drayson, Royal Artillery; George W. Lenox, Esq.; and many others.

Digitized by Google

A

DICTIONARY

OF

ARTS, MANUFACTURES, AND MINES.

A

ABA. A woollen stuff manufactured in Turkey.

ABACA. A species of fibre obtained in the Philippine Islands in abundance. Some authorities refer those fibres to the palm-tree known as the Abaca, or *Anisa textilis*. There seem, indeed, several well-known varieties of fibre under this name, some so fine that they are used in the most delicate and costly textures, mixed with fibres of the pine-apple, forming Pina muslins and textures equal to the best muslins of Bengal. Of the coarser fibres, mats, cordage, and sail-cloth are made. M. Duchesne states, that the well-known fibrous manufactures of Manilla have led to the manufacture of the fibres themselves, at Paris, into many articles of furniture and dress. Their brilliancy and strength give remarkable fitness for bonnets, tapestry, carpets, network, hammocks, &c. The only manufactured articles exported from the Philippine Islands, enumerated by Thomas de Comyn, Madrid, 1820 (transl. by Walton), besides a few tanned buffalo hides and skins, are 8000 to 12,000 pieces of light sail-cloth, and 200,000 lbs. of assorted abaca cordage.

ABIES (*in Botany*), the fir, a genus of trees which belong to the coniferous tribe. These trees are well known from their ornamental character, and for the valuable timber which they produce. They yield several resins or gum-resins, which are useful in the arts.

ABIES BALSAMEA (the Balm of Gilead fir) produces the Canadian balsam. This tree grows most abundantly in the colder regions of North America.

ABIES CANADENSIS (the hemlock spruce fir). A considerable quantity of the essence of spruce is extracted from the shoots of this tree; it is, however, also obtained from other varieties of the spruce fir. See SPRUCE ESSENCE.

ABIES PICEA of Linnæus (*Abies pectinata* of De Candole). The Silver fir, producing the Burgundy pitch and the Strasburg turpentine. See TURPENTINE.

ABIETINE. A pale yellow, transparent, viscid exudation from the *Abies pectinata*, a variety of the silver fir, growing in the neighbourhood of Strasburg, is commonly called Strasburg turpentine. It contains 35 per cent. of a volatile oil of an agreeable smell, combined with a resin, and a small quantity of the acid of amber, as well as the peculiar body called *abietin*, a resin of an acid kind, styled therefore by some abietic acid. If the ordinary resin be removed by absolute alcohol, and the remainder digested with carbonate of potash, an abietate of potash is obtained from which the crystalline *Abietine* can be procured. This peculiar substance dissolves in petroleum and crystallises out of it. Strasburg turpentine resembles Canadian balsam, and is used for attaching microscopic objects to glass slips.

ABLETTE, or ABLE, is a name given to several species of fish, but particularly to the Bleak, the scales of which are employed for making the *pearl essence* which is used in the manufacture of artificial pearls. See PEARLS, ARTIFICIAL.

ABRASION. The figuration of materials by wearing down the surface. In general, the abrasive tool or grinder is exactly a counterpart of the form to be produced; thus, for plane surfaces a flat grinder is employed, and for concave surfaces a convex grinder. GRINDSTONE; FILE.

ACACIA. (*L. acacia*, a thorn; Gr. ἀκή, a point.) The acacia is a very extensive genus of trees, or shrubby plants, inhabiting the tropical regions generally, but extending in some few instances into the temperate zone; being found, for example, in Australia and the neighbouring islands. Botanists are acquainted with nearly 300

Digitized by Google

species of the acacia, some of them yielding *gum arabic*, *catechu*, and other gums known in commerce; while others give a large quantity of *tannin*, especially a variety which grows in Van Diemen's Land or Tasmania. The *Acacia vera* is a native of Arabia and of Africa from Senegal to Egypt; the *A. Arabica* is found in the same countries and in India; the *A. Karoo* belongs to the Cape of Good Hope, producing the Cape gum; *A. Gummifera* is chiefly found in Africa near Mogadore; *A. Scyal* in Senegambia; *A. tortilis* grows in the Desert, as does also *A. Ehrenbergii*, their gums being collected by the Bedouin Arabs; and *A. senegal* grows in Arabia and Africa, from Senegal to the Cape of Good Hope. From these plants the different varieties of gum. See ARABIC, GUM; GUM.

ACACIA CATECHU. The catechu acacia (*Mimosa catechu* of Linnæus) is a tree with a moderately high and stout stem, growing in mountainous places in Bengal and Coromandel, and in other parts of Asia. Its unripe pods and wood, by decoction, yield the catechu, or *terra Japonica* of the shops. See CATECHU.

ACAJOU (BOIS D'). The French name for mahogany, *which see.*

ACESCENT. Substances which have a *tendency* to pass into an acid state; as an infusion of malt, &c.

ACETAL. ($C^{12}H^{14}O^4$.) One of the products of the oxidation of alcohol under the influence of oxygen condensed in platinum-black. Pieces of well-cleaned pumice-stone are moistened with nearly absolute alcohol, and placed at the bottom of a wide-mouthed flask, which is then filled with capsules containing platinum-black, and exposed to a temperature of 20° cent. (67° Fahr.) till the whole of the alcohol is acidified. It is a colourless, mobile, ethereal liquid, boiling at 221° F. Its density in the fluid state is 0·821 at 72°. The specific gravity of its vapour 4·138 *Stas.* (mean of three experiments): calculation gives 4·083 for four volumes of vapour.—For the description of the modes of determining vapour volume, see the article EQUIVALENTS, CHEMICAL.—The recent researches of Wurtz render it evident that the constitution of acetal is quite different to what has generally been supposed, and that it is in fact glycodiethyline; that is to say, glycole in which two equivalents of hydrogen are replaced by two equivalents of ethyle.—C. G. W.

ACETATE. (*Acétate*, Fr.; *Essigsaure*, Germ.) Any saline compound in which the acid constituent is acetic acid. All acetates are soluble in water: the least soluble being the acetates of tungsten, molybdenum, silver, and mercury. The acetates, especially those of lead and alumina, are of great importance in the arts. The acetates are all described under their respective bases;—a rule which will be adopted with all the acids. See ACID.

ACETIC ACID. (*Acide acétique*, Fr.; *Essigsaure*, Germ.; *Acidum aceticum*, Lat.; *Eisel*, Sax.) The word "acetic" is derived from the Latin *acetum*, applied to vinegar; probably the earliest known body possessing the sour taste and other properties which characterise acids; hence the term ACID, now become generic; both the Latin word and also the Saxon *acid* being from the root *acies* (Greek ἀκή), an edge or point, in reference to the *sharpness* of the taste.

Vinegar must have been known from the most remote periods of antiquity. It is mentioned by Moses.* Hippocrates employed it in medicine under the name ὄξος.† Hannibal, in his passage over the Alps, is said to have softened the rocks by fire and vinegar.‡ It was known to the alchemists in the more concentrated state in which it is obtained by the distillation of acetate of copper (verdigris); being mentioned both by Geber § and Stahl.

Crystallised acetic acid was first obtained by Westendorf ‖ and Lowitz.¶

Acetic acid exists in nature only in the organised kingdoms, or as a product of the oxidation of organic bodies. According to Vauquelin and Morin it is found in the juices of certain plants, and it probably exists in certain animal fluids.

Gmelin and Geiger state that it has been found in mineral waters, which is quite possible, having been derived from the decay of organic matter originally present.

Acetic acid is produced either by the oxidation, or the destructive distillation, of organic bodies containing its elements — carbon, hydrogen, and oxygen.

The oxidation of organic bodies, in order to convert them into acetic acid, may be effected either,— 1, by exposing them in a finely divided state to the action of air or oxygen gas; 2, by submitting them to the action of ferments in the presence of a free supply of atmospheric air; or, 3, by the action of chemical oxidising agents.

When acetic acid is procured by the *oxidation* of organic bodies, it is generally alcohol that is employed; but by whatever process alcohol is transformed into acetic acid, it is always first converted into an intermediate compound, aldehyde; and this

* Numbers, vi. 3.
‡ Livy.
‖ Westendorf, Diss. de opt. acet. conc. &c. Gottenburg, 1772.
¶ Lowitz, Allgem. Journal von Likerer, III. 600.
† De natura mulierbri.
§ Investigation of Perfection.

Digitized by Google

being a very volatile body, it is desirable always to effect the oxidation as completely and rapidly as possible, to avoid the loss of alcohol by the evaporation of this aldehyde.

Alcohol contains	$C^4 H^6 O^2$
Aldehyde „	$C^4 H^4 O^2$
Acetic acid „	$C^4 H^4 O^4$

The process, therefore, consists first in the removal of two equivalents of hydrogen from alcohol, which are converted into water,—aldehyde being produced,—and then the further union of this aldehyde with two equivalents of oxygen to convert it into acetic acid. See ALDEHYDE.

By the oxidation of alcohol, pure acetic acid is obtained: but the vinegars of commerce are mixtures of the pure acetic acid with water; with saccharine, gummy, and colouring matters; with certain ethers (especially the acetic ether), upon which their agreeable aromatic flavour depends; with empyreumatic oils, &c.

The pure acetic acid (free from water and other impurities) may be obtained most advantageously, according to Melsens*, by distilling pure acetate of potash with an excess of acetic acid (which has been obtained by the redistillation of ordinary acetic acid, procured either by oxidising alcohol, or by the destructive distillation of wood): the acid which first passes over contains water; but finally it is obtained free.

Properties of pure Acetic Acid. — When absolutely pure, acetic acid is a colourless liquid of specific gravity 1·064, which at temperatures below 62° F. (17° C.) solidifies into a colourless crystalline mass. It has strongly acid properties, being as powerfully corrosive as many mineral acids, causing vesication when applied to the skin; and it possesses a peculiarly pungent, though not a disagreeable smell.

The vapour of the boiling acid is highly combustible, and burns with a blue flame. Hydrated acetic acid dissolves camphor, gliadine, resins, the fibrine of blood, and several organic compounds. When its vapour is conducted through a slightly ignited porcelain tube, it is converted entirely into carbonic acid and acetone, an atom of the acid being resolved into an atom of each of the resultants. At a white heat the acid vapour is converted into carbonic acid, carburetted hydrogen, and water.

It attracts water with great avidity, mixing with it in all proportions. Its solution in water increases in density with the increase of acetic acid up to a certain point; but beyond this point its density again diminishes. Its maximum density being 1·073, and corresponding to an acid containing $C^4 H^4 O^4 + 2Aq.$, which may be extemporaneously produced by mixing 77·2 parts of crystallised acetic acid with 22·8 parts of water. This hydrate boils at 104° C. (219° F.), whilst the crystallised acid boils only at 120° C. (248° F.)†

The proportion of acetic acid in aqueous mixtures may therefore be ascertained, within certain limits, by determination of the specific gravity. See ACETIMETRY.

The following Table, by Mohr, indicates the per-centage of acetic acid in mixtures of different specific gravities; but of course this is only applicable in cases where no sugar or other bodies are present which increase the specific gravity.

Abstract of Mohr's Table of the Specific Gravity of Mixtures of Acetic Acid and Water.‡

Per-centage of Acetic Acid, $C^4 H^4 O^4$.	Density.	Per-centage of Acetic Acid, $C^4 H^4 O^4$.	Density.
100	1·0635	45	1·055
95	1·070	40	1·051
90	1·073	35	1·046
85	1·073	30	1·040
80	1·0735	25	1·034
75	1·072	20	1·027
70	1·070	15	1·022
65	1·068	10	1·015
60	1·067	5	1·0067
55	1·064	1	1·001
50	1·060		

* Comptes rendus, xix. 611.
‡ Mohr, Ann. der Chem. und Phar. xxxi. 227.
† Gerhardt, Chimie Organique i. 718.

Digitized by Google

Which numbers closely agree with those obtained by Dr. Ure.—

Acid.	Sp. Gr.	Acid.	Sp. Gr.	Acid.	Sp. Gr.
100	1·0620	76	1·0743	52	1·0617
98	1·0650	74	1·0740	50	1·0603
96	1·0680	72	1·0733	45	1·0558
94	1·0700	70	1·0725	40	1·0512
92	1·0715	68	1·0716	35	1·0459
90	1·0728	66	1·0712	30	1·0405
88	1·0730	64	1·0701	25	1·0342
86	1·0735	62	1·0687	20	1·0282
84	1·0738	60	1·0675	15	1·0213
82	1·0740	58	1·0665	10	1·0147
80	1·0750	56	1·0647	5	1·0075
78	1·0748	54	1·0634		

Acetic acid was formerly (and is still by some chemists) viewed as the hydrated teroxide of a radical, Acetyl.

$$\underbrace{(C^4 H^3)}_{\text{Acetyl.}} O^3, HO$$

And therefore an anhydrous acetic acid, $C^4 H^3 O^3$, was supposed to exist. Many attempts have been made to isolate this anhydrous acetic acid $C^4 H^3 O^3$; and a body which has received this name has been quite recently obtained by Gerhardt*, by the double decomposition of chloride of acetyl and an alkaline acetate, thus—

$$\underbrace{C^4 H^3 (O^2 Cl)}_{\text{Chloride of acetyl.}} + \underbrace{KO, C^4 H^3 O^3}_{\text{Acetate of potash.}} = \underbrace{C^8 H^6 O^6}_{\text{(So-called) Anhydrous acetic acid.}} + \underbrace{K Cl}_{\text{Chloride of potassium.}}$$

This body Gerhardt describes as a colourless liquid having a strong smell of acetic acid, but associated with the flavour of hawthorn blossom, having a specific gravity of 1·073, and boiling at 137° C. (278° F.); falling in water in the form of oily drops, only dissolving on gently heating that fluid. It is, however, not anhydrous acetic acid, but a compound isomeric with the hypothetical anhydrous acetic acid $C^4 H^3 O^3$, containing, in fact, double the amount of matter, its formula being $C^8 H^6 O^6$. See ISOMERISM.

The impure varieties of acetic acid known as vinegar, pyroligneous acid, &c., are the products met with in commerce, and therefore those require more minute description in this work.

Before describing the manufacture of these commercial articles, it may be interesting to allude to a method of oxidising alcohol by means of spongy platinum; which may yet meet with extensive practical application. It is a well-known fact that spongy platinum (*e.g.* platinum black), from its minute state of division, condenses the oxygen of the air within its pores; consequently, when the vapour of alcohol comes in contact with this body, a supply of oxygen in a concentrated state is presented to it, and the platinum, without losing any of its properties, effects the combination between the oxygen and the alcohol, converting the latter into acetic acid.

This may be illustrated by a very simple experiment. Place recently ignited spongy platinum, loosely distributed on a platinum-gauze, at a short distance over a saucer containing warm alcohol, the whole standing under a bell-glass supported by wedges on a glass dish, so that on removing the stopper from the bell-glass a slow current of air circulates through the apparatus; the spongy platinum soon begins to glow, in consequence of the combustion going on upon its surface, and acetic acid vapours are abundantly produced, which condense and run down the sides of the glass. The simultaneous formation of aldehyde is, at the same time, abundantly proved by its peculiar odour.

In Germany this method has been actually carried out on the large scale, and, if it were not for the high price of platinum and the heavy duty on alcohol, it might be

* Comptes rendus. xxxiv. 755.

Digitized by Google

extensively employed in this country, on account of its elegance and extreme simplicity. See ACETAL.

MANUFACTURE OF VINEGAR

A.—*By acetous Fermentation.*

All liquids which are susceptible of the vinous fermentation are capable of yielding vinegar. A solution of sugar is the essential ingredient, which is converted first into alcohol, and subsequently into acetic acid. The liquids employed vary according to circumstances. In this country the vinegar of commerce is obtained from an infusion of malt, and in wine countries from inferior wines.

The oxidation of alcohol is remarkably facilitated by the presence of nitrogenised organic bodies in a state of change, called *ferments*, hence the process is frequently termed *acetous fermentation*. Now, although in most cases the presence of these ferments curiously promotes the process, yet they have no specific action of this kind; for we have already seen that, by exposure to air in a condensed state, alcohol, even when pure, is converted into acetic acid; and, moreover, the action of oxidising agents, such as chromic and nitric acid, &c., is capable of effecting this change.

However, in the presence of a ferment, with a free supply of air, and at a temperature of from 60° to 90° F., alcohol is abundantly converted into acetic acid.

At the same time that the alcohol is converted into acetic acid, the nitrogenised and other organic matters undergo peculiar changes, and often a white gelatinous mass is deposited,—which contains Vibriones and other of the lower forms of organised beings,—and which has received the name of *mother of vinegar**, from the supposition that the formation and development of this body, instead of being a secondary result of the process, was really its exciting cause.

1. WINE VINEGAR. (*Vinaigre*, Fr.; *Weinessig*, Germ.) Wine vinegar is made of the best quality, and on the greatest scale, at Orleans in France, out of wines which have become more or less acidulous, and are, therefore, of inferior value. When the vinegar is made from well-flavoured wines, it is preferable to every other for the use of the table. The old method pursued in the *vinaigreries* consists merely in partially filling a series of large casks placed in three or four ranges over each other, in a cellar warmed with a stove to the temperature of 85° F., with the wine mixed with a certain proportion of ready-made vinegar as a ferment. Low-roofed apartments are the most suitable; when there is a high ceiling it is necessary to elevate the "mothers," in order that they may occupy the higher strata of warm air. This trouble is dispensed with when the roofs are low. Experience has proved that in high-roofed apartments, where the tuns are placed at different levels, the uppermost work off quicker and better than the others. More wine is added, in successive small portions, as fast as the first has become acetified, taking care that a free ventilation be maintained, in order to replace the carbonic acid produced by fresh atmospheric oxygen. In summer, under a favourable exposure of the windows and walls of the fermenting room to the sun, artificial heat is not needed. Each cask is of about 60 gallons' capacity, and into each cask of the set is poured $\frac{1}{3}$rd its capacity of vinegar, to which 2 galls. of wine are added, and weekly, afterwards, 2 galls. more. About 8 galls. are drawn off at the end of four weeks as vinegar, and then successive additions of wine are made as before to the casks. These are laid horizontally in rows upon their gawntrees, and are pierced at the upper surface of the front end with two holes: one, called the *eye*, is two inches in diameter, and serves for pouring in the charges through a funnel; the other is a small air-hole alongside. The casks should never be more than $\frac{3}{4}$rds full, otherwise a sufficient body of air is not present in them for favouring rapid acetification. At the end of a certain period, the deposit of tartar and lees becomes so great that the casks must be cleared out. This renovation usually takes place every 10 years; but the casks, when made of well-seasoned oak and bound with iron hoops, will last 25 years. The wine, as well the vinegar produced, should be clarified by being slowly filtered through beech chips, closely packed in a large open tun. When wines are new, and somewhat saccharine or too alcoholic, they acetify reluctantly, and need the addition of a little yeast, or even water, to the mixture; and when they are too weak, they should be enriched by the addition of some sugar or stronger wine, so as to bring them to a uniform state for producing vinegar of normal strength. To favour the renewal of fresh air into the upper part of the hogsheads, it would be advisable to pierce a two-inch hole near to the upper level of the liquid when the cask is fullest, by which means the heavy carbonic acid would fall out, and be replaced by the atmospheric air at the superior apertures.

* This substance has been supposed by some to be a fungus, and has been described by Mulder under the name of Mycoderma Aceti, or Vini.

Digitized by Google

Wine vinegar is of two kinds, *white* and *red*, according as it is prepared from white or red wine. *White wine vinegar* is usually preferred, and that made at Orleans is regarded as the best.

Dr. Ure found its average specific gravity to be 1·019, and to contain from 6½ to 7 per cent. of real acid; according to the Edinburgh Pharmacopœia, its specific gravity varies from 1·014 to 1·022.

2 MALT VINEGAR. (*British Vinegar*; in Germany called *Malz-Getreide* or *Bier-essig*.) In England vinegar is chiefly made from an infusion of malt, by first exciting in it the alcoholic fermentation, and subsequently inducing the oxidation of the alcohol into acetic acid.

For details of the processes of *malting* and *brewing* the alcoholic liquor, we must refer to the special articles on these subjects, confining our attention here more especially to the latter stages of the operation.

From 6 bushels of malt, properly crushed, 100 gallons of wort may be extracted by due mashing, the first water of infusion being of the temperature of 160° F., and the next two progressively hotter, for exhausting the soluble saccharine matter. When the wort is cooled to 75°, from 3 to 4 gallons of good yeast are stirred into it in the fermenting tun, and when it has been in brisk fermentation for about 40 hours, it is ready for transference into the vessels in which the acetification is to be accomplished.

The transformation of the fermented wort into vinegar was formerly effected in two ways, which were entirely opposite in their manner of operation. In one case the casks containing the fermented malt infusion (or *gyle*) were placed in close rooms, maintained at a uniform temperature, as already described in the preparation of wine vinegar; in the other, they were arranged in rows in an open field, where they remained many months. As regards the convenience and interests of the manufacturer, it appears that each method had its respective advantages, but both are now almost entirely abandoned for the more modern processes to be described — a short notice of the fielding process is, however, retained.

When *fielding* is resorted to, it must be commenced in the spring months, and then left to complete itself during the warm season. The *fielding* method requires a much larger extent of space and utensils than the stoving process. The casks are placed in several parallel tiers, with their bung side upwards and left open. Beneath some of the paths which separate the rows of cask are pipes communicating with the "*back*" at the top of the brewhouse; and in the centre of each is a valve, opening into a concealed pipe. When the casks are about to be filled, a flexible hose is screwed on to this opening, the other end being inserted into the bung-hole of the cask, and the liquor in the "*gyle back*" at the brewhouse, by its hydrostatic pressure, flows through the underlying pipe and hose into the cask. The hose is so long as to admit of reaching all the casks in the same row, and is guided by a workman.

After some months the vinegar is made, and is drawn off by the following operation: a long trough or sluice is laid by the side of one of the rows of casks, into which the vinegar is transferred by means of a syphon, whose shorter limb is inserted into the bung-hole of the cask. The trough inclines a little from one end to the other, and its lower end rests on a kind of travelling tank or cistern, wherein the vinegar from several casks is collected. A hose descends from the tank to the open valve of an underground pipe, which terminates in one of the buildings or stores, and, by the agency of a steam boiler and machinery, the pipe is exhausted of its air, and this causes the vinegar to flow through the hose into the valve of the pipe, and thence into the factory buildings. By this arrangement the whole of the vinegar is speedily drawn off. From the storehouse, where the vinegar is received, it is pumped into the *refining* or *rape* vessels.

These rape vessels are generally filled with the stalks and skins of grapes or raisins (the refuse of the British wine manufacture is generally used), and the liquor being admitted at the top, is allowed slowly to filter through them; after passing through, it is pumped up again to the top, and this process is repeated until the acetification is complete. Sometimes wood shavings, straw, or spent tan, are substituted for the grape refuse, but the latter is generally preferred.

By this process, not only is the oxidation of the alcohol completed, but coagulable nitrogenous and mucilaginous matter is separated, and thus the vinegar rendered *bright*. It is finally pumped into store vats, where it is kept until put into casks for sale.

3. SUGAR, CIDER, FRUIT, AND BEET VINEGARS. An excellent vinegar may be made for domestic purposes by adding, to a syrup consisting of one pound and a quarter of sugar for every gallon of water, a quarter of a pint of good yeast. The liquor being maintained at a heat of from 75° to 80° F., acetification will proceed so well that

Digitized by Google

in 2 or 3 days it may be racked off from the sediment into the ripening cask, where it is to be mixed with 1 oz. of cream of tartar and 1 oz. of crushed raisins. When completely freed from the sweet taste, it should be drawn off clear into bottles, and closely corked up. The juices of currants, gooseberries, and many other indigenous fruits, may be acetified either alone or in combination with syrup. Vinegar made by the above process from sugar should have fully the Revenue strength. It will keep much better than malt vinegar, on account of the absence of gluten, and at the present low price of sugar will not cost more, when fined upon beech chips, than 1s. per gallon.

The sugar solution may likewise be replaced by honey, cider, or any other alcoholic or saccharine liquid. An endless number of prescriptions exist, of which the following example may suffice:—100 parts of water to 13 of brandy, 4 of honey, and 1 of tartar.

Messrs. Neale and Duyck, of London, patented a process, in 1841, for the manufacture of vinegar from *beet-root*.

The saccharine juice is pressed out of the beet, previously rasped to a pulp, then mixed with water and boiled; this solution is fermented with yeast, and finally acetified in the usual way, the process being accelerated by blowing air up through the liquid, which is placed in a cylindrical vessel with fine holes at the bottom.

In some factories large quantities of sour ale and beer are converted into vinegar; but it is usually of an inferior quality, in consequence of being liable to further fermentation.

Dr. Stenhouse has shown that when *sea-weed* is subjected to fermentation, at a temperature of 96° F., in the presence of lime, acetate of lime is formed, from which acetic acid may be liberated by the processes described under the head of Pyroligneous Acid. Although such large quantities of sea-weed are found on all our coasts, it does not yet appear that they have yet been utilised in this way, although they would still be, to a certain extent, valuable as manure after having been subjected to this process.

4. The German or Quick-Vinegar Process. (*Schnellessigbereitung.*)—In the manufacture of vinegar it is highly important that as free a supply of air should be admitted to the liquid as possible, since if the oxidation take place but slowly, a considerable loss may be sustained from much of the alcohol, instead of being completely oxidised to acetic acid, being only converted into aldehyde, which, on account of its volatility, passes off in the state of vapour. This is secured in the German process by greatly enlarging the surface exposed to the air; which, however, not only diminishes or prevents the formation of aldehyde, but also greatly curtails the time necessary for the whole process. In fact, when this method was first introduced, from the supply of air being insufficient, very great loss was sustained from this cause, which was, however, easily remedied by increasing the number of air-holes in the apparatus.

This *quick-vinegar process* consists in passing the fermented liquor (which generally contains about 50 gallons of brandy of 60 per cent., and 37 gallons of beer or malt-wort, with $\frac{1}{1000}$ of ferment,) two or three times through an apparatus called the Vinegar Generator (*essigbilder*).

This apparatus consists of an oaken tub, narrower at the bottom than at the top, furnished with a loose lid, A, with a funnel, through which the liquids for charging the graduator are supplied; below this is a perforated shelf, B, having a number of small holes, loosely filled with packthread, about six inches long, and prevented from falling through by a knot at the upper end. Through this lid there likewise pass some glass tubes, open at both ends, C, which, having their apertures above and below the shelf, act as air vents. At a distance of about eighteen inches from the bottom is placed another perforated diaphragm, at D; and two inches above this the tub is perforated with eight or ten equidistant holes, E E, an inch to an inch and a half in diameter, which serve to admit atmospheric air. The space, F, between the diaphragm and the perforated lid, is filled with shavings of beechwood; by percolating through which, the solution is exposed, over a very considerable surface, to the oxidising influence of the air, which passes in a current upwards through the apparatus. One inch above the bottom is a syphon-shaped discharge

1

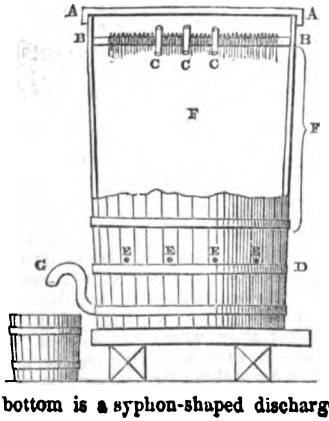

Digitized by Google

pipe, a, the upper curvature of which stands one inch below the air-holes in the side of the tub; so that when the liquid in the bottom of the generator, which has passed through the shavings, collects up to this level, it runs off into any vessel placed beneath to receive it.

The analogy between acetification and ordinary processes of decay, and even combustion, is well seen in this process; for as the oxidation proceeds, the temperature of the liquid rises to 100° or even 104° F.; but if the temperature generated by the process itself be not sufficient, the temperature of the room in which the tuns are placed should be artificially raised.

By this method 150 gallons of vinegar can be manufactured daily in ten tuns, which one man can superintend; and the vinegar, in purity and clearness, resembles distilled vinegar.

It is better to avoid using liquors containing much suspended mucilaginous matter, which, collecting on the chips, quickly chokes up the apparatus, and not only impedes the process, but contaminates the product.

The chips and shavings may with advantage be replaced by charcoal in fragments, which, by the oxygen it contains condensed in its pores, still further accelerates the process. The charcoal would of course require re-igniting from time to time.

Processes for the rapid formation of vinegar have likewise been adopted in this country. So long ago as the year 1824, Mr. Ham obtained a patent for the following method, which is still in operation at several works:—

The apparatus consists of a large vat, in the centre of which is placed a revolving pump, having two or more shoots pierced with holes, so as to cause a constant shower of wash—fermented wort—to descend. The lower part of the vat is charged with wash, the upper part with birch twigs, piled as high as possible, but without interfering with the revolution of the shoots. Between the surface of the wash and the joist which supports the birch twigs, a space of three or four inches is unoccupied, and holes are perforated in it, to admit a current of air, either from the atmosphere or from a blowing apparatus.

If the wash be maintained at a temperature of from 90 to 100° F., and the supply of liquid duly proportioned to the mass of the twigs, a charge is generally acetified in about a fortnight. The acetification can of course be arrested at any moment, and the current of air increased or diminished at will.

Generally in England much larger tuns are used than in Germany, the larger mass of matter thus undergoing oxidation generating so much heat that no artificial elevation of temperature is required; and in consequence of the promotion of the process in this way, one of these large tuns, fifteen feet wide at the bottom, fourteen at the top, and thirteen high, turns out as much vinegar as is in Germany obtained from six tubs eighteen feet high and four feet wide.

B.—*By destructive Distillation of Wood. Pyroligneous Acid.*

The general nature of the process of destructive distillation will be found detailed under the head of DISTILLLATION, DESTRUCTIVE; as well as a list of products of the rearrangement of the molecules of organic bodies under the influence of heat in closed vessels. We shall, therefore, at once proceed to the details of the process as specially applied in the manufacture of acetic acid from wood.

The forms of apparatus very generally employed on the Continent for obtaining at the same time crude acetic acid, charcoal, and tar, are those of Schwartz and Reichenbach; but in France the process is carried out with special reference to the production of acetic acid alone.

The following is a description of that in use at Nuits and Rouen:—

Into large cylindrical vessels (*fig.* 2) made of rivetted sheet iron, and having at their top and side a small sheet-iron cylinder, the wood intended for making charcoal is introduced. To the upper part of this vessel a cover of sheet iron, B, is adapted, which is fixed with bolts. This vessel, thus closed, represents, as we see, a vast retort. When it is prepared, as we have said, it is lifted by means of a swing crane, C, and placed in a furnace, D (*fig.* 3), of a form relative to that of the vessel, and the opening of the furnace is covered with a dome, E, made of masonry or brickwork. The whole being thus arranged, heat is applied in the furnace at the bottom. The moisture of the wood is first dissipated, but by degrees the liquor ceases to be transparent, and becomes sooty. An adapter tube, A, is then fitted to the lateral cylinder. This adapter enters into another tube at the same degree of inclination which commences the condensing apparatus. The means of condensation vary according to the localities. In certain works they cool by means of air, by making the vapour pass through a long series of cylinders, or sometimes, even, through a series of casks connected together; but most usually water is used for condensing, when it can be easily procured in abundance. The most

Digitized by Google

simple apparatus employed for this purpose consists of two cylinders, F F (*fig.* 3), the one within the other, and which leave between them a sufficient space to allow a considerable body of water to circulate along and cool the vapours. This double cylinder is adapted to the distilling vessel, and placed at a certain inclination. To the first double tube, F F, a second, and sometimes a third, entirely similar, are connected, which, to save space, return upon themselves in a zigzag fashion. The water is set in circulation by an ingenious means now adopted in many different manufactories. From the lower extremity, G, of the system of condensers, a perpendicular tube rises, whose length should be a little more than the most elevated point of the system. The water, furnished by a

2

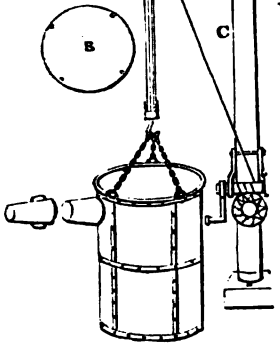

3.

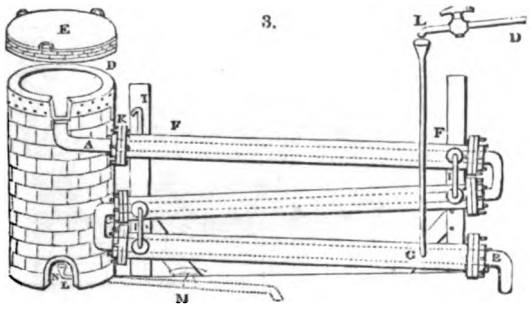

reservoir, L, enters by means of the perpendicular tube through the lower part of the system, and fills the whole space between the double cylinders. When the apparatus is in action, the vapours, as they condense, raise the temperature of the water, which, by the column in L G, is pressed to the upper part of the cylinders, and runs over by the spout R. To this point a very short tube is attached, which is bent towards the ground, and serves as an overflow.

The condensing apparatus is terminated by a conduit in bricks covered and sunk in the ground. At the extremity of this species of gutter is a bent tube, E, which, discharges the liquid product into the first cistern. When it is full, it empties itself, by means of an overflow pipe, into a great reservoir; the tube which terminates the gutter plunges into the liquid, and thus intercepts communication with the inside of the apparatus. The disengaged gas is brought back, by means of pipes M L, from one of the sides of the conduit to the under part of the ashpit of the furnace. These pipes are furnished with stopcocks, M, at some distance in front of the furnace, for the purpose of regulating the jet of the gas, and interrupting, at pleasure, communication with the inside of the apparatus. The part of the pipes which terminates in the furnace rises perpendicularly several inches above the ground, and is expanded like the rose of a watering-can, N. The gas, by means of this disposition, can distribute itself uniformly under the vessel, without suffering the pipe which conducts it to be obstructed by the fuel or the ashes.

The temperature necessary to effect the carbonisation is not at first considerable: however, at the last, it is raised so high as to make the vessels red hot; and the duration of the process is necessarily proportional to the quantity of wood carbonised. For a vessel which shall contain about 5 meters cube (nearly 6 cubic yards), 8 hours of fire is sufficient. It is known that the carbonisation is complete by the colour of the flame of the gas: it is first of a yellowish red; it becomes afterwards blue, when more carbonic oxide than carburetted hydrogen is evolved; and towards the end it becomes entirely white, — a circumstance owing, probably, to the furnace being more heated at this period, and the combustion therefore more complete. There is still another means of knowing the state of the process, to which recourse is more frequently had; that is the cooling of the first tubes, which are not surrounded with water: a few drops of this fluid are thrown upon their surface, and if they evaporate quietly, it is judged that the calcination is sufficient. The adapter tube is then unluted, and is slid into its junction pipe; the orifices are immediately stopped with plates of iron and plaster loam. The brick cover, E, of the furnace is first removed by means of the swing crane. then the cylinder itself is lifted out and replaced immediately by another one previously charged. When the cylinder which has been

Digitized by Google

taken out of the furnace is entirely cooled, its cover is removed, and the charcoal is emptied. Five cubic meters of wood furnish about 7 chaldrons and a half of charcoal.

The carbonisers of Reichenbach and Schwartz are usually employed with special reference to the manufacture of wood-charcoal, the condensation of the volatile products being only a secondary consideration.

In England the distillation of wood, with especial reference to the manufacture of pyroligneous acid, is generally carried out in large iron retorts, placed horizontally in the furnace; the process, in fact, closely resembling the distillation of coal in the manufacture of coal gas, excepting that the retorts are generally larger, being sometimes 4 feet in diameter, and 6 or 8 feet long. Generally two, or even three, are placed in each furnace, as shown in *fig.* 4, so that the fire of the single furnace, *a*, plays all round them. The doors for charging the retorts are at one end, *b* (*fig.* 5), and the pipe for carrying off the volatile products at the other, *c*, by which they are conducted, first to the tar condenser, *d*, and finally through a worm in a large tub, *e*, where the crude acetic acid is collected.

4

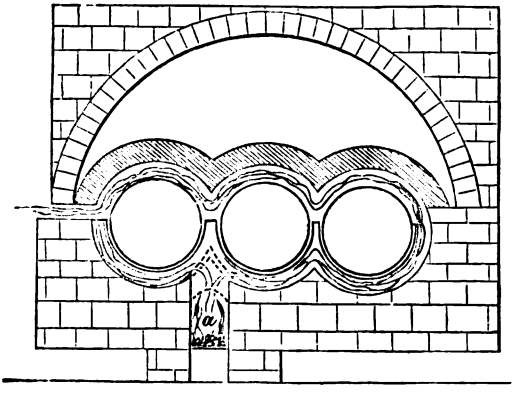

5

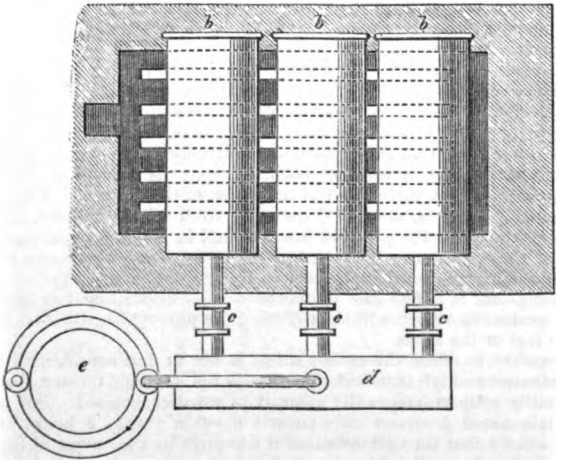

Of course, in different localities an endless variety of modifications of the process are employed.

In the Forest of Dean, instead of cylindrical retorts, square sheet-iron boxes are used, 4 ft. 6 in. by 2 ft. 9 in., which are heated in large square ovens.

Dr. Ure gives the following description of special works in Glasgow:—

The cylinders here employed are 6 feet long, and both ends project a little beyond the brickwork. One end has a disc, or round plate of cast-iron, well fitted and firmly bolted to it, from the centre of which an iron tube, about 6 inches in diameter, proceeds, and enters at a right angle the main tube of refrigeration. The diameter of this tube may be from 9 to 14 inches, according to the number of cylinders. The other end of the cylinder is called the mouth of the retort; this is closed by a disc of iron, smeared round its edge with clay-lute, and secured in its place by iron wedges. The charge of wood for such a cylinder is about 8 cwt. The hard woods — oak, ash, birch, and beech — are alone used in this manufactory, fir not being found to answer. The heat is kept up during the day, and the furnace allowed to cool during

Digitized by Google

the night. Next morning the door is opened, the charcoal removed, and a new charge of wood introduced. The average product of crude vinegar is 35 gallons. It is much contaminated with tar, is of a deep brown colour, and has a specific gravity of 1·025. Its total weight is therefore about 300 lbs.; but the residuary charcoal is found to weigh no more than one-fifth of the wood employed; hence nearly one-half of the ponderable matter of the wood is dissipated in incondensable gases.

With regard to the relative advantages of cylindrical retorts or square boxes, it should be remarked, that the cylinders are more adapted for the distillation of the large billets of Gloucestershire and the refuse ship timber of Glasgow, Newcastle, and Liverpool; but, on the other hand, where light wood is used, such as that generally carbonised in the Welsh factories, the square ovens answer better.

6

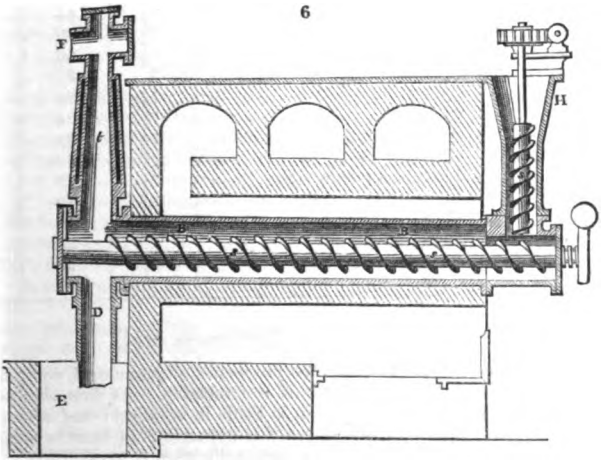

The most recent and ingenious improvement in the manufacture of pyroligneous acid is that patented by the late Mr. A. G. Halliday, of Manchester, and adopted by several large manufacturers. The process consists in effecting the destructive distillation of waste materials, such as sawdust and spent dyewoods, by causing them to pass in continuous motion through heated retorts. For this purpose the materials, which are almost in a state of powder, are introduced into a hopper, H (*fig.* 6), whence they descend into the retort, B, being kept all the while in constant agitation, and at the same time moved forward to the other end of the retort by means of an endless screw, *s*. By the time they arrive there, the charge has been completely carbonised, and all the pyroligneous acid evolved at the exit tube, *t*. The residuary charcoal falls through the pipe D into a vessel of water, E, whilst the volatile products escape at F, and are condensed in the usual way.

Several of these retorts are generally set in a furnace side by side, the retorts are only 14 inches in diameter, and eight of these retorts produce in 24 hours as much acid as 16 retorts 3 feet in diameter upon the old system. In the manufacturing districts of Lancashire and Yorkshire, where such immense quantities of spent dyewoods accumulate, and have proved a source of annoyance and expense for their removal, this process has afforded a most important means of economically converting them into valuable products — charcoal and acetic acid.

Mention should also be made of Messrs. Solomons and Azulay's patent for employing superheated steam to effect the carbonisation of the wood, which is passed directly into the mass of materials. Since the steam accompanies the volatile products, it necessarily dilutes the acid; but this is in a great degree compensated for by employing these vapours to concentrate the distilled products, by causing them to traverse a coil of tubing placed in a pan of the distillates.

As regards the yield of acetic acid from the different kinds of wood, some valuable facts have been collected and tabulated by Stolze, in his work on Pyroligneous Acid:—

Digitized by Google

One Pound of Wood.		Weight of Acid.	Carbonate of Potassa neutralised by One Ounce of Acid.	Weight of Charcoal.
		ozs.	grs.	ozs.
White birch	Betula alba	7⅛	55	3⅞
Red beech	Fagus sylvatica	7	54	3⅞
Large-leaved linden	Tilia pataphylla	6⅞	52	3⅝
Oak	Quercus robur	6⅞	50	4⅛
Ash	Fraxinus excelsior	7⅛	44	3¾
Horse chestnut	Esculus hippocastanus	7⅛	41	3½
Lombardy poplar	Populus dilatata	7⅜	40	3¾
White poplar	Populus alba	7⅜	39	3¾
Bird cherry	Prunus padus	7	37	3½
Basket willow	Salix	7⅜	35	3½
Buckthorn	Rhamnus	7½	34	3¼
Logwood	Hematoxylon campechianum	7⅛	35	2
Alder	Alnus	7⅜	30	3½
Juniper	Juniperus communis	7¼	29	3⅝
White fir	Pinus abies	6⅝	29	3⅜
Common pine	Pinus sylvestris	6¾	28	3½
Common savine	Juniperus sabina	7	27	3⅝
Red fir	Abies pectinata	6⅞	25	3¾

Properties of the crude Pyroligneous Acid.

The crude pyroligneous acid possesses the properties of acetic acid, combined with those of the pyrogenous bodies with which it is associated. As first obtained, it is black, from the large quantity of tar which it holds in solution; and although certain resins are removed by redistillation, yet it is impossible to remove some of the empyreumatic oils by this process, and a special purification is necessary.

In consequence of the presence of creosote, and other antiseptic hydrocarbons, in the crude pyroligneous acid, it possesses, in a very eminent degree, anti-putrescent properties. Flesh steeped in it for a few hours may be afterwards dried in the air without corrupting; but it becomes hard, and somewhat leather-like: so that this mode of preservation does not answer well for butcher's meat. Fish are sometimes cured with it.

Purification of Pyroligneous Acid.

This is effected either, 1st, by converting it into an acetate, — acetate of lime or soda, — and then, after the purification of these salts by exposure to heat sufficient to destroy the tar, and repeated recrystallisation, liberating the acid again by distilling with a stronger acid, *e.g.* sulphuric.

Or, 2nd, by destroying the pyrogenous impurities by oxidising agents, such as binoxide of manganese in the presence of sulphuric acid, &c.

The former is the method generally adopted.

After the naphtha has been expelled, the acid liquor is run off into tanks to deposit part of its impurities; it is then syphoned off into another vessel, in which is either milk of lime, quicklime, or chalk; the mixture is boiled for a short time, and then allowed to stand for 24 hours to deposit the excess of lime with any impurities which the latter will carry down with it. The supernatant liquor is then pumped into the evaporating pans.

The evaporation is effected either by the heat of a fire applied beneath the evaporating pans, or more frequently by a coil of pipe in the liquor through which steam is passed — the liquor being kept constantly stirred, and the impurities which rise to the surface during the process carefully skimmed off.

From time to time, as the evaporation advances, the acetate of lime which separates is removed by ladles, and placed in baskets to drain; and the residual mother-liquor is evaporated to dryness. This mass, by ignition, is converted into carbonate of lime and acetone.

If the acetate of lime have been procured by directly saturating the crude acid, it is called *brown acetate*; if from the acid once purified by redistillation, it is called *grey acetate*.

Digitized by Google

From this grey acetate of lime acetate of soda is now prepared, by adding sulphate of soda to the filtered solution of the acetate of lime. In performing this operation, it is highly important to remember that, for every equivalent of acetate of lime, it is necessary to add two equivalents of sulphate of soda, on account of the formation of a double sulphate of soda and lime. The equation representing the change being:—

$$\underbrace{CaO, C^4H^3O^3}_{\text{Acetate of lime.}} + 2(NaO, SO^3) = \underbrace{NaO, C^4H^3O^3}_{\text{Acetate of soda.}} + \underbrace{CaO, SO^3. \ NaO, SO^3}_{\text{Double salt.}}$$

Or, if sulphuric acid be considered as a bibasic acid, which this very re-action so strongly justifies—

$$\underbrace{C^4H^3(Ca)O^4}_{\text{Acetate of lime.}} + \underbrace{Na^2S^2O^8}_{\text{Sulphate of soda.}} = \underbrace{C^4H^3(Na)O^4}_{\text{Acetate of soda.}} + \underbrace{\left.\begin{matrix}Ca\\Na\end{matrix}\right\rangle S^2O^8}_{\text{Double salt.}}$$

If this point be neglected, and only one equivalent of sulphate of soda be used, one-half of the acetate of lime may escape decomposition, and thus be lost.

After the separation of the double salt, the solution of acetate of soda is drawn off, any impurities allowed to subside, and then concentrated by evaporation until it has a density of 4·3 — when the acetate of soda crystallises out, and may be further purified, if requisite, by another re-solution and re-crystallisation. The contents of the mother liquors are converted into acetone and carbonate of soda, as before.

The crystallised acetate of soda is now fused in an iron pot, at a temperature of about 400°, to drive off the water of crystallisation, the mass being kept constantly stirred. A stronger heat must not be applied, or we should effect the decomposition of the salt.

For the production of the acetic acid from this salt, a quantity of it is put into a stout copper still, and a deep cavity made in the centre of the mass, into which sulphuric acid of specific gravity 1·84 is poured in the proportion of 35 per cent. of the weight of the salt; the walls of the cavity are thrown in upon the acid, the whole briskly agitated with a wooden spatula. The head of the still is then luted, and connected with the condensing worm, and the distillation carried on at a very gentle heat. The worm should be of silver or porcelain, as also the still head; and even silver solder should be used to connect the joinings in the body of the still. The still is now generally heated by a steam "jacket." See DISTILLATION.

The acid which passes over is nearly colourless, and has a specific gravity of 1·05. That which collects at the latter part of the operation is liable to be somewhat empyreumatic, and therefore before this point is reached the receiver should be changed; and throughout the entire operation, care should be taken to avoid applying too high a temperature, as the flavour and purity of the acid will invariably suffer.

Any trace of empyreuma may be removed from the acid by digestion with animal charcoal and redistillation.

A considerable portion of this acid crystallises at a temperature of from 40° to 50° F., constituting what is called *glacial acetic acid*, which is the compound $C^4H^4O^4$ (or $C^4H^3O^3$, HO).

For culinary purposes, pickling, &c., the acid of specific gravity 1·05 is diluted with five times its weight of water, which renders it of the same strength as Revenue proof vinegar.

Several modifications and improvements of this process have recently been introduced, which require to be noticed.

The following process depends upon the difficult solubility of sulphate of soda in strong acetic acids:—100 lbs. of the pulverised salt being put into a hard glazed stoneware receiver, or deep pan, from 35 to 36 lbs. of concentrated sulphuric acid are poured in one stream upon the powder, so as to flow under it. The mixture of the salt and acid is to be made very slowly, in order to moderate the action and the heat generated, as much as possible. After the materials have been in intimate contact for a few hours, the decomposition is effected; sulphate of soda in crystalline grains will occupy the bottom of the vessel, and acetic acid the upper portion, partly liquid and partly in crystals. A small portion of pure acetate of lime added to the acid will free it from any remainder of sulphate of soda, leaving only a little acetate in its place; and though a small portion of sulphate of soda may still remain, it is unimportant, whereas the presence of any free sulphuric acid would be very injurious. This is easily detected by evaporating a little of the liquid, at a moderate heat, to dryness, when that mineral acid can be distinguished from the neutral soda sulphate. This plan of superseding a troublesome distillation, which is due to M. Mollerat, is one of the greatest improvements in this process, and depends upon the insolubility of the

Digitized by Google

sulphate of soda in acetic acid. The sulphate of soda thus recovered, and well drained, serves anew to decompose acetate of lime; so that nothing but this cheap earth is consumed in carrying on the manufacture. To obtain absolutely pure acetic acid, the above acid has to be distilled in a glass retort.

Völckel recommends the use of hydrochloric instead of sulphuric acid for decomposing the acetate.

The following is his description of the details of the process:—

"The crude acetate of lime is separated from the tarry bodies which are deposited on neutralisation, and evaporated to about one-half its bulk in an iron pan. Hydrochloric acid is then added until a distinctly acid reaction is produced on cooling; by this means the resinous bodies are separated, and come to the surface of the boiling liquid in a melted state, whence they can be removed by skimming, while the compounds of lime, with creosote, and other volatile bodies, are likewise decomposed, and expelled on further evaporation. From 4 to 6 lbs. of hydrochloric acid for every 33 gallons of wood vinegar is the average quantity required for this purpose. The acetate having been dried at a high temperature on iron plates, to char and drive off the remainder of the tar and resinous bodies, is then decomposed, by hydrochloric acid, in a still with a copper head and leaden condensing tube. To every 100 lbs. of salt about 90 to 95 lbs. of hydrochloric acid of specific gravity 1·16 are required. The acid comes over at a temperature of from 100° to 120° C. (212° to 248° F.), and is very slightly impregnated with empyreumatic products, while a mere cloud is produced in it by nitrate of silver. The specific gravity of the product varies from 1·058 to 1·061, and contains more than 40 per cent. of real acid; but as it is seldom required of this strength, it is well to dilute the 90 parts of hydrochloric acid with 25 parts of water. These proportions then yield from 95 to 100 parts of acetic acid of specific gravity 1·015.

This process is recommended on the score of economy and greater purity of product. The volatile empyreumatic bodies are said to be more easily separated by the use of hydrochloric than sulphuric acid; moreover, the chloride of calcium being a more easily fusible salt than the sulphate of lime, or even than the double sulphate of lime and soda, the acetic acid is more freely evolved from the mixture. The resinous bodies also decompose sulphuric acid towards the end of the operation, giving rise to sulphurous acid, sulphuretted hydrogen, &c., which contaminate the product.

The decomposition of acetate of lime or lead by means of sulphuric acid has many inconveniences, and there is danger of the product being contaminated with sulphuric acid. Christl* was therefore induced to employ hydrochloric acid as a decomposing agent, and has found that when this acid is not used in excess, the distillate contains scarcely an appreciable trace of chlorine. A mixture of 100 lbs. of raw acetate of lime, obtained from the distillation of wood, and containing 90 per cent. of neutral acetate, with 120 lbs. of hydrochloric acid (20° Baumé) is allowed to stand during a night, and then distilled in a copper vessel. The application of heat requires to be gradual, in order to prevent the somewhat thick liquor from running over. The product of acetic acid amounts to about 100 lbs. of 8° B.; it has a faint yellow colour and empyreumatic odour, which may be perfectly removed by treatment with wood charcoal and subsequent rectification.

In order to obtain the acetate of lime sufficiently pure, Völckel† adopts the following process:—The raw pyroligneous acid is saturated with lime without previous distillation. A part of the resinous substances dissolved in the acid are thus separated in combination with lime. The solution of impure acetate of lime is allowed to stand until it becomes clear, or it is filtered, then evaporated in an iron pan to about one-half, and hydrochloric acid added until a drop of the cooled liquid distinctly reddens litmus-paper. A part is sometimes distilled off in a copper still, in order to obtain wood-spirit. The addition of acid serves to separate a great part of the resin still held in solution, which collects together in the boiling liquid, and may be skimmed off, and likewise decomposes the compounds of lime with creosote, and some other imperfectly-known volatile substances which are driven off by further evaporation. As these volatile substances have little or no action upon litmus-paper, its being reddened by the liquor is a sign, that not only are the lime compounds of these substances decomposed, but also a small quantity of acetate of lime. The quantity of acid necessary for this purpose varies, and depends upon the nature of the pyroligneous acid, which is again dependent upon the quantity of the water in the wood from which it is obtained. Three hundred pints of wood-liquor will require from 4 to 6 lbs. of hydrochloric acid.

The solution of acetate of lime is evaporated to dryness, and a tolerably strong heat applied at last, in order to remove all volatile substances. Both operations may be

* Dingler's Polytech. Journ. † Ann. der Chem. und Pharm.

Digitized by Google

performed in the same iron pans; but when the quantity of salt is large, the latter may be more advantageously effected upon cast-iron plates. The drying of the salt requires very great care, for the empyreumatic substances adhere very strongly to the acetate of lime, as well as to the compound of resin and acetic acid mixed with it, and when not perfectly separated, pass over with the acetic acid in the subsequent distillation with an acid, communicating to it a disagreeable odour. The drying must therefore be continued until, upon cooling, the acetate does not smell at all, or but very slightly. It then has a dirty brown colour. The acetic acid is obtained by distillation with hydrochloric acid, in a still with a copper head and leaden condenser; and when proper precautions are taken, the acetic acid does nor contain a trace of either metal. The quantity of hydrochloric acid required cannot be exactly stated, because the acetate of lime is mixed with resin, and already formed chloride of calcium. In most instances 90 or 95 parts by weight of acid, 1·16 specific gravity, are sufficient to decompose completely 100 parts of the salt, without introducing much hydrochloric acid into the distillate.

The distilled acetic acid possesses only a very faint empyreumatic odour, very different from that of the raw pyroligneous acid; it is perfectly colourless, and should only become slightly turbid on the addition of nitrate of silver. If the acid has a yellowish colour, this is owing to resin having been spirted over in the distillation. It is therefore advisable to remove the resin,—which is separated on the addition of hydrochloric acid, and floats upon the surface of the liquid,—either by skimming or filtration through a linen cloth. The distilled acid has a specific gravity ranging between 1·058 and 1·061, containing upwards of 40 per cent. of anhydrous acetic acid. It is rarely that acid of this strength is required; and as the distillation is easier when the mixture is less concentrated, water may be added before or towards the end of the distillation. Völckel recommends as convenient proportions—

100 parts of acetate of lime,
90 to 95 hydrochloric acid,
25 parts water,

which yield from 95 to 100 parts of acetic acid of 1·105 specific gravity; 150 litres of raw pyroligneous acid yield about 50 lbs. of acetic acid of the above specific gravity.

The acid prepared in this way may be still further purified by adding a small quantity of carbonate of soda and redistilling; it is thus rendered quite free from chlorine, and any remaining trace of colour is likewise removed. The slight empyreumatic smell may be removed by distilling the acid with about 2 or 3 per cent. of acid chromate of potash. Oxide of manganese is less efficacious as a purifying agent.

Although pure acetic acid may be procured by the distillation of vinegar, the whole of the acid cannot be obtained except by distilling to dryness, by which means the extractive substances are burnt, and the distillate rendered impure. In order to obviate this difficulty, Stein* proposes to add 30 lbs. of salt to every 100 lbs. of vinegar; the boiling-point is thus raised, and the acid passes over completely.

By the Quick Process of Ham, when the fermentation is finished, the greatest care ought to be taken that all access of air is excluded from the wash, and that its temperature be reduced to, and maintained at, a heat below the point where acetification commences. Those who, like Messrs. Hill, Evans, and Co., of Worcester, attach great importance to the fabrication of the best keeping vinegars, are in the habit of filtering the fermented wash, and also of storing it away for many months in a cool situation ere it is passed through the acetifier; and there cannot be a moment's doubt concerning the great value of this practice, not only as regards the appearance and flavour of the resulting vinegar, but also in respect to its dietetic and sanitary properties.

All recently fermented wash contains a quantity of partially decomposed gluten, some of which is mechanically suspended merely, but by far the larger portion exists in a state of solution through the agency of carbonic acid gas.

A filter will remove the former, but time alone can dissipate the carbonic acid and lead to the deposition of the soluble gluten. At all events, time is the only available remedy, for though heat would expel the carbonic acid, yet it would at the same time drive off the alcohol; and agitation in contact with air, though it removed the carbonic acid, would tend to the formation of acetic acid, by which the gluten would be kept in solution more decidedly than before, and thus lead to the production of a turbid, ropy, and impure vinegar, extremely liable to decompose and undergo the putrefactive fermentation. It is obvious, therefore, that the theoretical conditions needed in the treatment of fermented wort by the vinegar-maker are precisely those which we have shown to be in use at Worcester. That is to say, the gluten, when insoluble, should

* Polytech. Centralblat, 1852, p. 305.

Digitized by Google

be removed by a filter, and when held in solution by carbonic acid, this must be slowly expelled by keeping at a temperature too low for acetification to take place, and which may be assumed at less than 55° F. Fermented wort stored away at this temperature for six months will flow to the acetifier perfectly limpid and bright; it will cause no deposition of gluten upon the birch twigs, and thus secure complete oxidation; it will rapidly take on the grateful flavour of acetic ether, and never become tainted by the formation of that noxious product aldehyde, which so frequently contaminates ill-made vinegar.

Presuming, however, that all the necessary precautions, with respect to care in washing, fermenting, and keeping the wort, have been attended to, we may now pass on to the acetifier, that is to say, Ham's acetifier.

This is a wooden vat or vessel (*fig.* 7) about 12 feet in height, and from 7 to

7

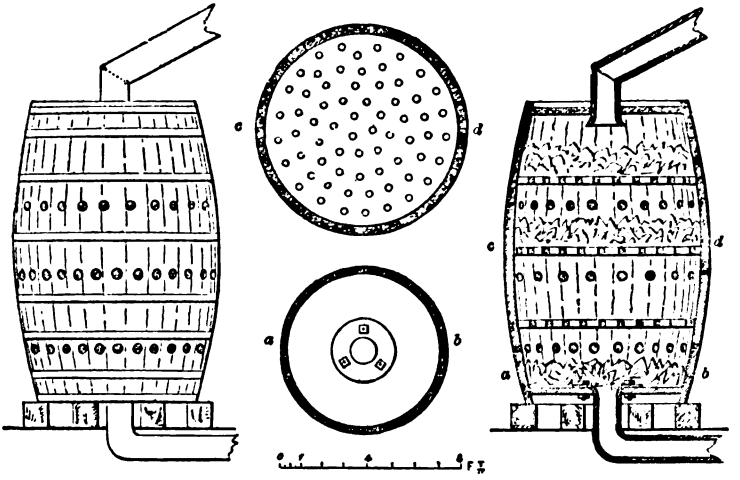

8 feet in diameter, closed at top and bottom, except at the opening for the introduction of the wash and the exit of the vinegar. The sides are perforated by a few small holes for the admission of air, and within are three floors or partitions perforated with numerous holes for the passage of the wash through them. Upon these floors are laid bundles of birch twigs, to favour the dispersion and division of the fluid which passes through the acetifier, and is thus brought into the most immediate contact with the oxygen contained in the vessel, or admitted through the openings in its sides. The fluid or wash is admitted at the top of the acetifier, and suffered to trickle slowly through the masses of birch twigs and through the partitions, thus causing a rapid absorption of oxygen, and consequent production of vinegar, which with any undecomposed wash flows out at the bottom of the vessel, and is again pumped up to the top, and so on until the process is finished. If we examine the circumstances connected with the formation of vinegar in this way, we shall perceive, that it is a case of partial combustion, or, in other words, an example in which an organic compound undergoes oxidation at a temperature and under conditions which prevent the completion of the change.

Every one must have observed that when common coals are thrown upon a fire, a volatile portion immediately bursts into flame, while copious particles of soot or carbon are thrown off unburnt; though of the other constituent of the coal, that is to say, the hydrogen gas, no particle escapes unoxidised. This arises from the fact, that, except at very high temperatures, hydrogen has a greater affinity for oxygen than carbon has; consequently, as the supply of oxygen from atmospheric air in the immediate neighbourhood is limited, the hydrogen seizes upon its equivalent to the exclusion of the carbon, which, therefore, remains and constitutes soot. Exactly in the same way the hydrogen of the alcohol in the wash oxidises to the exclusion of the carbon, and vinegar is formed from the remaining or carbonaceous element, which becomes itself slightly oxidised. Thus 2 atoms of alcohol are composed of: —

Carbon	-	4 atoms.
Hydrogen	-	6 „
Oxygen	-	2 „

Digitized by Google

whilst acetic acid acid or pure radical vinegar contains of—

Carbon	4	atoms.
Hydrogen	3	„
Oxygen	3	„

If, therefore, we suppose the contact of air with alcohol to have led to the absorption of oxygen, so as to have oxidised three atoms of hydrogen, and thus produced three atoms of water, we have left —

Carbon	4	atoms.
Hydrogen	3	„
Oxygen	2	„

which, by the mere absorption of another atom of oxygen, becomes—

Carbon	4	atoms.
Hydrogen	3	„
Oxygen	3	„

or pure acetic acid, with which the water produced from the hydrogen remains in union and forms vinegar. From the above it follows that, as the oxidisation of the hydrogen generates heat, there ought to be a very appreciable rise in the temperature during the passage of the wort through the acetifier. And, in practice, this is found to be the case; so that precautions are needed to prevent the heat from rising so high as to vaporise the remaining alcohol of the wash. The temperature sought to be obtained is about 90° to 92° F., at which oxidation goes on freely, and the loss of alcohol is moderate. In using the word moderate, we speak practically rather than chemically; for in reality the loss is very serious with strong worts. From practical results, conducted with more than ordinary care, it has been ascertained that about one-third of all the extractive matter of the malt and grain is lost or dissipated during the processes of fermentation and acetification. Thus, a wort having a specific gravity of 1·072, or, in technical language, weighing about 26 lbs. per barrel, affords vinegar containing 5·4 per cent. of pure acetic acid, and a residuary extract of 10 lbs. from 36 gallons. The former of these would indicate 35 lbs. of sugar, or 13·7 lbs. per barrel of gravity; whilst the latter shows 3·8 lbs. per barrel; the two united being only 17·5 lbs. instead of 26, the original weight. The loss, therefore, has been 8·5 lbs., or from a specific gravity of 1·072 to less than 1·050. This prodigious destruction of extract seems to imply that great improvements may yet take place in the manufacture of vinegar.

The manufacture of vinegar, by Ham's process, is an extremely interesting operation, and when conducted with proper care furnishes results of the most satisfactory and uniform character. These, however, are not to be obtained without a vast amount of experience and the most vigilant attention on the part of the manufacturer. Thus a difference in the water, in the malt, in the mode of washing, in the cooling of the wort, or in the fermentation of the wort, will each give rise to modifications in the acetifying process which no subsequent skill or labour can rectify. There seems no doubt that the most important points in Ham's method are the cooling and fermentation of the wort; though, where perfection is sought for, no one of the other conditions can be omitted or neglected with impunity. We shall, therefore, proceed to treat of these conditions *seriatim*, rather than in the order of their importance. At first sight it might be supposed that the purer the water the better; that is to say, the less the amount of earthy or saline constituents the more valuable the water would be for making vinegar. Experience, however, teaches us the contrary; and science confirms the truth of this teaching, by pointing out the real nature of the operation. When pure water is made to act at a high temperature upon the ordinary ingredients of a vinegar-maker's mash tun, it is not alone the sugar, gum, and starch of the grain which enters into solution, for under such circumstances the gluten is also dissolved; but this gluten is composed of vegetable albumen and vegetable gelatine, the former of which, as is well known, is capable of being decomposed and precipitated by many earthy and metallic salts, of which the sulphate of lime is one. If, therefore, this salt exists in the water employed for the fabrication of vinegar, or of ale or beer, the wort will contain little or no vegetable albumen; consequently, the vinegar or beer made with such water never becomes cloudy or ropy, as happens when pure water is used, for these defects arise from an excess of albuminous matter. The water used for making the celebrated Burton ale contains a great deal of sulphate of lime; and the spring water of Worcester, which is employed by the extensive firm of Hill, Evans, and Co., in that city, vinegar-makers, contains also a very large amount of sulphate of lime, and no doubt contributes much towards maintaining the well-established reputation of that firm. Whenever, therefore, much

Digitized by Google

sulphate of lime exists in water, without the presence of any noxious ingredient, such water may always be relied upon as favourable for the production of good beer and vinegar.

As regards the malt, or rather the mixture of malt and grain, employed for the production of wort, the common Scotch distillers' formula is the best, containing, as it always does, a considerable per-centage of oats, for the long husk of the oat greatly facilitates the operation of draining, and thus secures the thorough separation of the wort from the spent grains.

In practice it is found necessary to ferment only two gravities, a high and a low, all the other qualities of vinegar being made by mixing or diluting these after acetification. The most common, and unquestionably the best, gravity for fermentation is that which in technical language weighs about 20 lbs., or has a specific gravity of 1·056 ; the other, or that intended for strong or proof vinegar, being of specific gravity 1·072 : this latter affords a vinegar containing about 5½ per cent. of anhydrous acetic acid.

In every instance the fermentation must be carried to its utmost limit, or to zero at least; and in cooling the wort prior to fermentation, great care must be used to prevent the accession of the acetous fermentation before the yeast is added; for if this happens to any considerable extent, the nitrogenised matter of the yeast is then permanently retained in solution by the acetic acid, and this may give rise to the inconvenience called the "mother." To secure a perfect vinegar by Ham's process, as much attention is required during the cooling and fermentation as for the finest ale; and this axiom cannot be too strongly inculcated into the minds of vinegar-makers. The heat of the fermenting tun should not exceed 75° F., as the alcohol formed by the process is apt at higher temperatures to pass off in considerable quantity with the carbonic acid, and thus give rise to a loss of vinegar. Presuming that the fermentation has been well conducted, and that the specific gravity of the wash is as low as water, or 1·000, the next step is to pass it through that apparatus which constitutes the great peculiarity of Ham's process. This apparatus is called the acetifier.—*Ure.*

C. — *Manufacture of Acetic Acid from Acetate of Copper.*

Before the process for pyroligneous acid, or wood vinegar, was known, there was only one method of obtaining strong vinegar practised by chemists; and it is still followed by some operators, to prepare what is called radical or aromatic vinegar. This consists in decomposing, by heat alone, the crystallised binacetate of copper, commonly, but improperly, called distilled verdigris. With this view, we take a stoneware retort (*fig.* 8), of a size suited to the quantity we wish to operate upon, and coat it with a mixture of fireclay and horsedung, to make it stand the heat better. When this coating is dry, we introduce into the retort the crystallised acetate slightly bruised, but very dry; we fill it as far as it will hold without spilling when the beak is considerably inclined. We then set it in a proper furnace. We attach to its neck an adopter pipe, and two or three globes with opposite tubulures, and a last globe with a vertical tubulure. The apparatus is terminated by a Welter's tube, with a double branch; the shorter issues from the last globe, and the other dips into a flask filled with distilled vinegar. Every thing being thus arranged, we lute the joinings with a putty made of pipeclay and linseed oil, and cover them with glue paper. Each globe is placed in a separate basin of cold water, or the whole may be put into an oblong trough, through which a constant stream of cold water is made to flow. The tubes must be allowed a day to dry. Next day we proceed to the distillation, tempering the heat very nicely at the beginning, and increasing it by very slow degrees till we see the drops follow each other pretty rapidly from the neck of the retort, or the end of the adopter tube. The vapours which pass over are very hot, whence a series of globes are necessary to condense them. We should renew, from time to time, the water of the basins, and keep moist pieces of cloth upon the globes; but this demands great care, especially if the fire be a little too brisk, for the vessels become, in that case, so hot, that they would infallibly be broken if touched suddenly with cold water. It is always easy for us to regulate this operation according to the emission of gas from the extremity

8

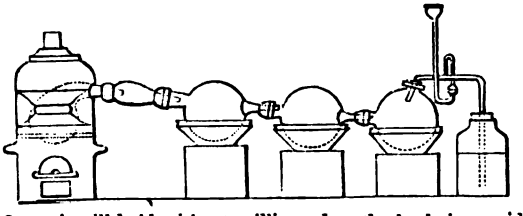

Digitized by Google

of the apparatus. When the air bubbles succeed each other with great rapidity, we must damp the fire.

The liquor which passes in the first half hour is weakest; it proceeds, in some measure, from a little water sometimes left in the crystals, which, when well made, however, ought to be anhydrous. A period arrives towards the middle of the process when we see the extremity of the beak of the retort, and of the adopter, covered with crystals of a lamellar or needle shape, and of a pale green tint. By degrees these crystals are carried into the condensed liquid by the acid vapours, and give a colour to the product. These crystals are merely some of the cupreous salt forced over by the heat. As the process approaches its conclusion, we find more difficulty in raising the vapours; and we must then augment the intensity of the heat, in order to continue their disengagement. Finally, we judge that the process is altogether finished, when the globes become cold, notwithstanding the furnace is at the hottest, and when no more vapours are evolved. The fire may then be allowed to go out, and the retort to cool.

As the acid thus obtained is slightly tinged with copper, it must be rectified before bringing it into the market. For this purpose we may make use of the same apparatus, only substituting for the stoneware retort a glass one, placed in a sand-bath. All the globes ought to be perfectly clean and dry. The distillation is to be conducted in the usual way. If we divide the product into thirds, the first yields the feeblest acid, and the third the strongest. We could not push the process quite to dryness, because there remain in the last portions certain impurities which would injure the flavour of the acid.

The total acid thus obtained forms nearly one-half of the weight of the acetate employed, and the residuum forms three-tenths; so that about two-tenths of the acid have been decomposed by the heat, and are lost.—*Ure.*

Other metallic acetates may be used instead of the acetate of copper, but with variable results as to the amount of acetic acid which they yield. Acetates which have easily reducible oxides—as those of copper, silver, mercury, lead, &c.—afford a larger proportion of acetic acid; but acetone marsh gas, as well as carbonic oxide and carbonic acid, invariably accompany it. The acetate of silver gives no acetone; whilst those of the alkaline earths yield chiefly acetone or marsh gas, being converted into carbonates. See ACETONE.

Anhydrous Acetic Acid, as made by Gerhardt, is obtained by mixing perfectly dry fused acetate of potash with about half its weight of chloride of benzoyle, and applying a gentle heat; when a liquid distils over, which, after being rectified, has a constant boiling point of 279° F., and is heavier than water, with which it does not mix until after it has been agitated with it for some time. It dissolves at once in hot water forming acetic acid.

Impurities and Adulterations.

In order to prevent the putrefactive change which often takes place in vinegar, when carelessly prepared by the fermentation of malt wine, &c., it was at one time supposed to be necessary to add a small quantity of sulphuric acid. This notion has long since been shown to be false; nevertheless, since the addition of 1 part of sulphuric acid to 1000 of vinegar was permitted by an Excise regulation, and thus the practice has received legal sanction, it is still continued by many manufacturers. So long as the quantity is retained within these limits, and if pure sulphuric acid be used (great care being taken that there is no arsenic present in such oil of vitriol, as is not unfrequently the case in inferior varieties), no danger can ensue from the habit; but occasionally the quantity is much overpassed by dishonest dealers, of whom it is to be hoped there are but few.

Dr. Ure mentions having found by analysis in a sample of vinegar, made by one of the most eminent London manufacturers, with which he supplied the public, no less than 175 grains of the strongest oil of vitriol per gallon, added to vinegar containing only $3\frac{4}{10}$ per cent. of real acetic acid, giving it an apparent strength after all of only 4 per cent., whereas standard commercial vinegar is rated at 5 per cent.

The methods of determining sulphuric acid will be given, once for all, under the head of ACIDIMETRY, and therefore need not be described in every case where it occurs: the same remark applies to hydrochloric acid and others.

Hydrochloric acid is rarely intentionally added to vinegar; but it may accidentally be present when the pyroligneous acid has been purified by Völckel's process. It is detected by the precipitate which it gives with solution of nitrate of silver in the presence of nitric acid.

Nitric acid is rarely found in vinegar. For its method of detection, see NITRIC ACID.

Wine vinegar generally contains tartaric acid and tartrates; but it is purified from them by distillation.

Digitized by Google

Sulphurous acid is occasionally met with in pyroligneous acid. This is recognised by its bleaching action on delicate vegetable colours, and by its conversion, under the influence of nitric acid, into sulphuric acid, which is detected by chloride of barium.

Sulphuretted hydrogen is detected by acetate of lead giving a black colouration or precipitate.

Metallic Salts.—If care be not taken in constructing the worm of the still of silver or earthenware, distilled acetic acid is frequently contaminated with small quantities of metal from the still, copper, lead, tin, &c. These metals are detected by the addition of sulphuretted hydrogen, as is fully discussed under the head of the individual metals. Copper is the most commonly found, and it may be detected in very minute quantities by the blue colour which the solution assumes on being supersaturated with ammonia.

It is not uncommon to add to pyroligneous acid, a little colouring matter and acetic ether, to give it the colour and flavour of wine or malt vinegar; but this can hardly be called an adulteration.

The presence of the products of acetification of cider may be detected by neutralising the vinegar with ammonia, and then adding solution of acetate of lime. Tartrate of lime is, of course, precipitated from the wine vinegar, while the pearly malic acid of the cider affords no precipitate with the lime, but may be detected by acetate of lead, by the glistening pearly scales of malate of lead, hardly soluble in the cold.

Uses of Acetic Acid.

Acetic acid is extensively employed in the arts, in the manufacture of the various acetates, especially those of alumina and iron, so extensively employed in calico printing as mordants, sugar of lead, &c. It is likewise used in the preparation of varnishes, for dissolving gums and albuminous bodies; in the culinary arts, especially in the manufacture of pickles and other condiments; in medicine, externally, as a local irritant, and internally, to allay fever, &c.

For the treatment in cases of poisoning, we refer to Taylor, Pereira, and other medical authorities.—H. M. W.

At present there are about fifty manufacturers of vinegar on the large scale in this country. There was, until 1842, a duty on vinegar of 2*d.* a gallon. This produced 23,842*l.*, showing that nearly 2,900,000 gallons had been charged with the duty. Since the withdrawal of the duty it has not been possible to determine with any degree of exactness the quantity of vinegar which is made annually. It has been computed—and the computation is probably not far from the truth—that 4,000,000 gallons are now made, and one half of this is made by the five principal vinegar-makers who have their works in London.

The imports of vinegar in 1863, were—

	Gallons.	Computed real Value.
From France - - -	42,809	£4,284
Other parts - - - -	7,268	549
Total Imports - -	50,077	£4,833

The average price fixed for the value has been 2*s.* for the French vinegar and 1*s.* 6*d.* for the other sorts. Since July 6, 1856 the duty on all vinegar imported has been 3*d.* per gallon.

That the importation of this article varies considerably is shown by the following statement:—

In 1843 we imported 21,784 gallons; in 1845, 195,967 gallons; and in 1856, 35,516 gallons.

Of the vinegar made in the United Kingdom, the exports to the end of the year 1863, for the previous six years, were—

	Tons.	Declared Value.		Tons.	Declared Value.
1858 - -	1,029	£23,384	1861 - -	1,383	£29,796
1859 - -	1,101	25,674	1862 - -	856	21,733
1860 - -	1,638	34,762	1863 - -	1,599	29,118

ACETIC ETHERS. (*Acetate of Ethyl. Essigäther. Essignaptha. Essigsaures. Æthyloxyd.*)

These are compounds of acetic acid with the alcohol radicals. See ALCOHOL RADICALS and RADICALS CHEMICAL.

ACETIMETER. An apparatus used for determining the strength of vinegar.

ACETIMETRY. *Determination of the Strength of Vinegar.*—If in vinegars we were dealing with mixtures of pure acetic acid and water, the determination of the density might to a certain extent afford a criterion of the strength of the solution; but vinegar, especially that obtained from wine and malt, invariably contains gluten, saccharine, and mucilaginous matters, which increase its density and render this method altogether fallacious.

Digitized by Google

The only accurate means of determining the strength of vinegar is by ascertaining the quantity of carbonate of soda or potash neutralised by a given weight of the vinegar under examination. This is performed by adding to the vinegar a standard solution of the alkaline carbonate of known strength from a bruette, until, after boiling to expel the carbonic acid, a solution of litmus previously introduced into the liquid is distinctly reddened.

The details of this process, which is equally applicable to mineral and other organic acids, will be found fully described under the head of ACIDIMETRY.

Roughly, it may be stated that every 53 grains of the pure anhydrous carbonate of soda, or every 69 grains of carbonate of potassa (*i. e.* one equivalent), correspond to 60 grains of acetic acid ($C^4 H^4 O^4$).*

It is obvious that preliminary examinations should be made to ascertain if sulphuric, hydrochloric, or other mineral acids are present; and, if so, their amount determined, otherwise they will be reckoned as acetic acid.

The British malt vinegar is stated in the London Pharmacopœia to require a drachm (60 grains) of crystallised carbonate of soda (which contains 10 equivalents of water of crystallisation) for saturating a fluid ounce, or 4·46 grains; it contains, in fact, from 4·6 to 5 per cent. of real acetic acid.

The same authorities consider that the purified pyroligneous acid should require 87 grains of carbonate of soda for saturating 100 grains of the acid.

Dr. Ure suggests the use of the bicarbonate of potash. Its atomic weight, referred to hydrogeo as unity, is 100·584, while the atomic weight of acetic acid is 51·563; if we estimate 2 grains of the bicarbonate as equivalent to 1 of the real acid, we shall commit no appreciable error. Hence a solution of the carbonate containing 200 grains in 100 measures will form an acetimeter of the most perfect and convenient kind; for the measures of test liquid expended in saturating any measure—for instance, an ounce or 1000 grains of acid—will indicate the number of grains of real acetic acid in that quantity. Thus, 1000 grains of the above proof would require 50 measures of the acetimetrical alkaline solution, showing that it contains 50 grains of real acetic acid in 1000, or 5 per cent.

Although the bicarbonate of potash of the shops is not absolutely constant in composition, yet the method is no doubt accurate enough for all practical purposes.

The acetimetrical method employed by the Excise is that recommended by Messrs. J. and P. Taylor†, and consists in estimating the strength of the acid by the specific gravity which it acquires when saturated by hydrate of lime. Acid which contains 5 per cent. of real acid is equal in strength to the best malt vinegar, called by the makers No. 24, and is assumed as the standard of vinegar strength, under the denomination of "proof vinegar."‡ Acid which contains 40 per cent. of real acetic acid is, therefore, in the language of the Revenue, 35 per cent. *over proof;* it is the strongest acid on which duty is charged by the acetimeter. In the case of vinegars which have not been distilled, an allowance is made for the increase of weight due to the mucilage present; hence, in the acetimeter sold by Bate, a weight, marked M, is provided, and is used in trying such vinegars. As the hydrate of lime employed causes the precipitation of part of the mucilaginous matter in the vinegar, it serves to remove this difficulty to a certain extent. (*Pereira.*)—H. M. W.

ACETONE, *syn. pyroacetic spirit, mesitic alcohol, pyroacetic ether.* $C^6 H^6 O^2$. A volatile fluid usually obtained by the distillation of the acetates of the alkaline earths. It is also obtained in a variety of operations where organic matters are exposed to high temperature. Tartaric and citric acids yield it when distilled. Sugar, gum, or starch, when mixed with lime and distilled, afford acetone. If crude acetate of lime be distilled, the acetone is accompanied by a small quantity of ammonia and traces of methylamine. The latter is due to the nitrogen contained in the wood; the distillate from which was used in the preparation of the acetate of lime. Crude acetone may be purified by redistilling it in a water-bath. A small quantity of slaked lime should be added previous to distillation, to combine with any acid that may be present. When pure, it forms a colourless mobile fluid, boiling at 133° F. Its density at 18° is 0·7921, at 32° it is 0·8140. The density of its vapour was found by experiment to be 2·00; theory requires 2·01, supposing six volumes of carbon vapour, twelve volumes of hydrogen, and two volumes of oxygen to be condensed to four volumes. When acetone is procured from acetate of lime, two equivalents of the latter are decomposed, yielding one equivalent of acetone, and two equivalents of carbonate of lime. It has been found that a great number of organic acids, when distilled under similar cir-

* In most cases where, in commercial language, mention is made of *real acetic acid*, the hypothetical compound $C^4H^3O^3$ is meant; but it would be better in future always to give the per-centage of acetic acid $C^4H^4O^4$—for the body $C^4H^3O^3$ is altogether hypothetical—never having yet been discovered. See the remarks on Anhydrous Acetic Acid at the commencement of this article.—H. M. W.

† Quarterly Journal of Science, vi. 255.

‡ 58 Geo. III., c. 65.

Digitized by Google

cumstances, yield bodies bearing the same relation to the parent acid that acetone does to acetic acid: this fact has caused the word acetone to be used of late in a more extended sense than formerly. The word ketone is now generally used to express a neutral substance derived by destructive distillation from an acid, the latter losing the elements of an equivalent of carbonic acid during the decomposition. Theoretical chemists are somewhat divided with regard to the rational formulæ of the ketones. An overwhelming weight of evidence has been brought by Gerhardt and his followers, to prove that they should be regarded as aldehydes in which an equivalent of hydrogen is replaced by the radical of an alcohol. Thus common acetone ($C^6 H^6 O^2$) is aldehyde ($C^4 H^4 O^2$), in which one equivalent of hydrogen is replaced by methyle, $C^2 H^3$.

Acetone dissolves several gums and resins, amongst others sandarach. Wood spirit, which sometimes, owing to the presence of impurities, refuses to dissolve sandarach, may be made to do so by the addition of a small quantity of acetone.

When treated with sulphuric acid and distilled, acetone yields a hydrocarbon called mesitylene or mesitylole, $C^{18} H^{12}$.—C. G. W.

ACETYL. Two radicals are known by this name, namely, $C^4 H^3$ and $C^4 H^3 O^2$. Their nomenclature has not, as yet, been definitely settled. Some chemists (following Berzelius, who denied the existence of oxidised radicals) regard acetyl $C^4 H^3$ as a radical, the teroxide of which constituted acetic acid. The followers of Gerhardt, on the other hand, consider acetic acid to contain a radical of the formula $C^4 H^3 O^2$. The latter is generally known as acetyl. Dr. Williamson proposes to call it othyl. The hydrocarbon $C^4 H^3$ is now assumed to exists in aldehyde, which can be regarded as formed on the type two atoms of water, thus:—

$$O^2 \left\{ \begin{matrix} C^4 H^3 \\ H. \end{matrix} \right.$$

In the above formula we have 2 atoms of water, in which 1 equivalent of hydrogen is replaced by the non-oxidised radical $C^4 H^3$, which may very conveniently be named aldyle, to recall its existence in aldehyde.—C. G. W.

ACETYLAMINE. ($C^4 H^5 N$.) An oily alkaloid, produced by acting with the oil of olefiant gas (Dutch liquid, or chloride of ethylene) on an alcoholic solution of ammonia. According to M. Natanson, its discoverer, it boils at 424° F. Its density at 59° is 0·975.—C. G. W.

ACHROMATIC, *destitute of colour*. White light consists, as is shown by its decomposition by a prism, of several coloured rays, having different degrees of refrangibility. (See LIGHT.) When, therefore, white light passes through any transparent body, such as a lens, it is liable to this decomposition to a greater or a less extent, and hence colour is produced. This is termed *chromatic aberration*. Many, especially old-fashioned, telescopes exhibit objects surrounded by beautifully coloured fringes. Now the means which have been devised to prevent this are termed achromatic, signifying the *deprivation of colour*.

ACHROMATIC LENS. Hale, in 1733, constructed lenses which did not produce chromatic dispersion. In 1757 Dolland arrived, by a perfectly independent examination, at the same discovery, and published it.

A lens may be regarded as a number of prisms united round a centre; therefore a ray of light falling on a lenticular glass is decomposed, and the rays being of unequal refrangibility, they have on its axis as many foci as there are colours. The images, therefore, of objects which are produced at these points are superimposed, more or less, and the edges fringed with indistinct colours. The least refrangible rays unite at foci further away than the more refrangible; and the object sought for, and attained, by both Hale and Dolland, was the means of uniting these rays at one focal point. They combined flint-glass with crown-glass, and found that, by a suitable curvature given to the object-glasses, the images seen through them were distinct, and free from these adventitious colours.

Telescopes, microscopes, &c., fitted up with such combinations of lenses as those described, are called achromatic telescopes.

ACID. (*Acidus*, sour, *L.*) The term acid was formerly applied to bodies which were sour to the taste, and in popular language the word is still so used. It is to be regretted that the necessities of science have led to the extension of this word to any bodies combining with bases to form salts, whether such combining body is sour or otherwise. Had not the term *acid* been established in language as expressing a sour body, there would have been no objection to its use; but chemists now apply the term to substances which are not sour, and which do not change blue vegetable colours; and consequently they fail to convey a correct idea to the *popular* mind.

Hobbes, in his "Computation or Logic," says, "A name is a word taken at pleasure to serve for a mark which may raise in our mind a thought like to some thought we had before, and which, being pronounced to others, may be to them a sign of what thought the speaker had, or had not, before in his mind." This philosopher thus truly

Digitized by Google

expresses the purpose of a name; and this purpose is not fulfilled by the term, *acid*, as now employed.

Mr. John Stuart Mill, in his "System of Logic," thus, as it appears not very happily, endeavours to show that the word *acid*, as a scientific term, is not inappropriate or incorrect.

"Scientific definitions, whether they are definitions of scientific terms, *or of common terms used in a scientific sense*, are almost always of the kind last spoken of: their main purpose is to serve as the landmarks of scientific classification. And, since the classifications in any science are continually modified as scientific knowledge advances, the definitions in the sciences are also constantly varying. A striking instance is afforded by the words acid and alkali, especially the former. As experimental discovery advanced, the substances classed with acids have been constantly multiplying; and, by a natural consequence, the attributes connoted by the word have receded and become fewer. At first it connoted the attributes of combining with an alkali to form a neutral substance (called a salt), being compounded of a base and oxygen, causticity to the taste and touch, fluidity, &c. The true analysis of muriatic acid into chlorine and hydrogen caused the second property, composition from a base and oxygen, to be excluded from the connotation. The same discovery fixed the attention of chemists upon hydrogen as an important element in acids; and more recent discoveries having led to the recognition of its presence in sulphuric, nitric, and many other acids, where its existence was not previously suspected, there is now a tendency to include the presence of this element in the connotation of the word. But carbonic acid, silica, sulphurous acid, have no hydrogen in their composition; that property cannot, therefore, be connoted by the term, unless those substances are no longer to be considered acids. Causticity and fluidity have long since been excluded from the characteristics of the class by the inclusion of silica and many other substances in it; and the formation of neutral bodies by combination with alkalis, together with such electro-chemical peculiarities as this is supposed to imply, are now the only *differentia* which form the fixed connotation of the word acid as a term of chemical science."

The term ALKALI, though it is included by Mr. J. S. Mill in connection with *acid* in his remarks, does not stand, even as a scientific term, in the objectional position in which we find acid. *Alkali* is not, strictly speaking, a common name to which any definite idea is attached. *Acid*, on the contrary, is a word *commonly* employed to signify sour. The highest chemical authorities, following Gerhardt, now define ACIDS to be *Salts of Hydrogen*. An acid must now be defined to be a body which has the power of destroying more or less completely the characteristic properties of alkalis—at the same time losing their own distinguishing peculiarities. See ALKALI; ANHYDRIDES.

In this Dictionary all the acids named will be found under their respective heads, as ACETIC, NITRIC, SULPHURIC Acids, &c.

ACIDIFIER. Any body whose presence appears to be necessary for the production of an acid.

ACIDIMETER. An instrument for measuring the strength or quantity of real acid contained in a free state in liquids. The construction of that instrument is founded on the principle that the quantity of real acid present in any sample is proportional to the quantity of alkali which a given weight of it can neutralise. The instrument, like the alkalimeter (see ALKALIMETER), is made to contain 1000 grains in weight of pure distilled water, and is divided accurately into 100 divisions, each of which therefore represents 10 grains of pure distilled water; but as the specific gravity of the liquids which it serves to measure may be heavier or lighter than pure water, 100 divisions of such liquids are often called 1000 grains' measure, irrespectively of their weight (specific gravity), and accordingly 10—20 &c. divisions of the acidimeter are spoken of as 100—200 &c. grains' measure; that is to say, as a quantity or measure which, if filled with pure water, would have weighed that number of grains.

ACIDIMETRY. Acidimetry is the name of a chemical process of analysis by means of which the strength of acids — that is to say, the quantity of pure free acid contained in a liquid — can be ascertained or estimated. The principle of the method based upon Dalton's law of chemical combinations; or, in other words, upon the fact that, in order to produce a complete reaction, a certain definite weight of reagent is required.

If, for example, we take 1 equivalent, or 49 parts in weight, of pure oil of vitriol of specific gravity 1·8485, dilute it (of course within limits) with no matter what quantity of water, and add thereto either soda, potash, magnesia, ammonia, or their carbonates, or in fact any other base, until the acid is neutralised — that is to say, until blue litmus-paper is no longer, or only very faintly, reddened when moistened with a drop of the acid liquid under examination,—it will be found that the respective weights of

Digitized by Google

each base required to produce that effect will greatly differ, and that with respect to the bases just mentioned these weights will be as follows: —

Soda (caustic)	1 equiv.	= 31 parts in weight	} Saturate or neutralise 1 eqv. = 49 parts in weight of pure oil of vitriol (sp. gr. 1·8485), or 1 equiv. of any other acid.
Potash (caustic)	„	= 47 „	
Ammonia	„	= 17 „	
Carbonate of soda	„	= 53 „	
Carbonate of potash	„	= 69 „	

This being the case, it is evident that if we wish to ascertain by such a method the quantity of sulphuric acid or of any other acid contained in a liquid, it will be necessary, on the one hand, to weigh or measure accurately a given quantity of that liquid to be examined, and, on the other hand, to dissolve in a known *volume* of water the *weight* above mentioned of any one of the bases just alluded to, and to pour that solution gradually into that of the acid until neutralisation is obtained; the number of volumes of the basic solution which will have been required for the purpose will evidently indicate the amount in weight of acid which existed in the liquid under examination. Acidimetry is therefore exactly the reverse of alkalimetry, since in principle it depends on the number of volumes of a solution of a base diluted with water to a definite strength, which are required to neutralise a known weight or measure of the different samples of acids.

The solution containing the *known weight* of base, and capable therefore of saturating a *known weight* of acid, is called a "test-liquor;" and an aqueous solution of ammonia, of a standard strength, as first proposed by Dr. Ure, affords a most exact and convenient means of effecting the purpose, when gradually poured from a graduated dropping-tube or acidimeter into the sample of acid to be examined.

The strength of the water of ammonia used for the experiment should be so adjusted that 1000 grains' measure of it (that is, 100 divisions of the alkalimeter) really contain one equivalent (17 grains) of ammonia, and consequently neutralise one equivalent of any one real acid. The specific gravity of the pure water of ammonia employed as a test for that purpose should be exactly 0·992, and when so adjusted, 1000 grains' measure (100 divisions of the acidimeter) will then neutralise exactly

40	grains,	or one	equivalent,	of sulphuric acid (dry).
49	„	„	„	oil of vitriol, sp. gr. 1·8485.
37·5	„	„	„	hydrochloric acid (gas, dry).
54	„	„	„	nitric acid (dry).
60	„	„	„	crystallised acetic acid.
45	„	„	„	oxalic acid.
150	„	„	„	tartaric acid.
51	„	„	„	acetic acid.

And so forth with the other acids.

A standard liquor of ammonia of that strength becomes, therefore, a universal acidimeter, since the number of measures or divisions used to effect the neutralisation of 10 or of 100 grains of any one acid, being multiplied by the atomic weight or equivalent number of the acid under examination, the product, divided by 10 or by 100, will indicate the per-centage of real acid contained in the sample. The proportion of free acid being thus determined with precision, even to $\frac{1}{50}$th of a grain, in the course of five minutes, as will be shown presently.

The most convenient method of preparing the standard liquor of ammonia of that specific gravity is by means of a glass bead, not but that specific-gravity bottles and hydrometers may, of course, be employed; but Dr. Ure remarks, with reason, that they furnish incomparably more tedious and less delicate means of adjustment. The glass bead, of the gravity which the test-liquor of ammonia should have, floats, of course, in the middle of such a liquor at the temperature of 60° F.; but if the strength of the liquor becomes attenuated by evaporation, or its temperature increased, the attention of the operator is immediately called to the fact, since the difference of a single degree of heat, or the loss of a single hundredth part of a grain of ammonia per cent., will cause the bead to sink to the bottom—a degree of precision which no hydrometer can rival, and which could not otherwise be obtained, except by the troublesome operation of accurate weighing. Whether the solution remains uniform in strength is best ascertained by introducing into the bottle containing the ammonia test-liquor two glass beads, so adjusted that one, being very slightly heavier than the liquid, may remain at the bottom; whilst the other, being very slightly lighter, reaches the top, and remains just under the surface as long as the liquor is in the normal state; but when, by the evaporation of some ammonia, the liquor becomes weaker, and consequently its specific gravity greater, the bead at the bottom rises towards the surface, in which case a few drops of strong ammonia should be added to restore the balance.

Digitized by Google

An aqueous solution of ammonia, of the above strength and gravity, being prepared, the acidimetrical process is in every way similar to that practised in alkalimetry; that is to say, a known weight, for example, 10 or 100 grains of the sample of acid to be examined are poured into a sufficiently large glass vessel, and diluted, if need be, with water, and a little tincture of litmus is poured into it, in order to impart a distinct red colour to it; 100 divisions, or 1000 grains' measure, of the standard ammonia test-liquor above alluded to, are then poured into an alkalimeter (which, in the present case, is used as an acidimeter), and the operator proceeds to pour the ammonia test-liquor from the alkalimeter into the vessel containing the acid under examination, in the same manner, and with the same precautions used in alkalimetry (see ALKALIMETRY), until the change of colour, from red to blue, of the acid liquor in the vessel indicates that the neutralisation is complete and the operation finished.

Let us suppose that 100 grains in weight of a sample of sulphuric acid, for example, have required 61 divisions (610 water-grains' measure) of the acidimeter for their complete neutralisation, since 100 divisions (that is to say, a whole acidimeter full) of the test-liquor of ammonia is capable of neutralising exactly 49 grains — one equivalent — of oil of vitriol, of specific gravity 1·8485, it is clear that the 61 divisions employed will have neutralised 29·89 of that acid, and, consequently, the sample of sulphuric acid examined contained that quantity per cent. of pure oil of vitriol, representing 24·4 per cent. of pure anhydrous sulphuric acid: thus —

Divisions. Oil of Vitriol.

100 : 49 :: 61 : x = 29·89.

Anhydrous Acid.

100 : 40 :: 61 : x = 24·4.

The specific gravity of an acid of that strength is 1·2178.

In the same manner, suppose that 100 grains in weight of hydrochloric acid have required 90 divisions (900 grains' measure) of the acidimeter for their complete neutralisation, the equivalent of dry hydrochloric acid gas being 36·5, it is clear that since 90 divisions only of the ammonia test-liquor have been employed, the sample operated upon must have contained per cent. a quantity of acid equal to 33·30 of dry hydrochloric acid gas in solution, as shown by the proportion:—

Divis. Hydrochloric acid.

100 : 36·5 :: 90 : x = 32·85.

The specific gravity of such a sample would be 1·1646.

Instead of the ammonia test-liquor just alluded to, it is clear that a solution containing one equivalent of any other base — such as, for example, carbonate of soda, or carbonate of potash, caustic lime, &c. — may be used for the purpose of neutralising the acid under examination. The quantity of these salts required for saturation will of course indicate the quantity of real acid, and, by calculation, the per-centage thereof in the sample, thus: — The equivalent of pure carbonate of soda 53, and that of carbonate of potash 69, either of these weights will represent one equivalent, and consequently 49 grains of pure oil of vitriol, 36·5 of dry hydrochloric acid, 60 of crystallised, or 51 of anhydrous acetic acid, and so on. The acidimetrical assay is performed as follows:—

If with *carbonate of soda*, take 530 grains of pure and dry carbonate of soda, obtained by igniting the bicarbonate of that base (see ALKALIMETRY), and dissolve them in 10,000 water-grains' measure (1000 acidimetrical divisions) of distilled water. It is evident that each acidimeter full (100 divisions) of such a solution will then correspond to one equivalent of any acid, and accordingly if the test-liquor of carbonate of soda be poured from the acidimeter into a weighed quantity of any acid, with the same precautions as before, until the neutralisation is complete, the number of divisions employed in the operation will, by a simple rule of proportion, indicate the quantity of acid present in the sample as before. Pure carbonate of soda is easily obtained by recrystallising once or twice the crystals of carbonate of soda of commerce, and carefully washing them. By heating them gradually they melt, and at a very low red heat entirely lose their water of crystallisation and become converted into pulverulent anhydrous neutral carbonate of soda, which should be kept in well closed bottles.

When *carbonate of potash* is used, then, since the equivalent of carbonate of potash is 69, the operator should dissolve 690 grains of it in the 10,000 grains of pure distilled water, and the acidimeter being now filled with this test-liquor, the assay is carried on again precisely in the same manner as before. Neutral carbonate of potash for acidimetrical use is prepared by heating the bicarbonate of that base to redness, in order to expel one equivalent of its carbonic acid; the residue left is pure neutral carbonate of potash; and in order to prevent its absorbing moisture, it should be put,

Digitized by Google

whilst still hot, on a slab placed over concentrated sulphuric acid, or chloride of calcium, under a glass bell, and, when sufficiently cool to be handled, transferred to bottles carefully closed.

To adapt the above methods to the French weights and measures, now used also generally by the German chemist, we need only substitute 100 decigrammes for 100 grains, and proceed with the graduations as already described.

A solution of *caustic lime* in cane sugar has likewise been proposed by M. Peligot for acidimetrical purposes. To prepare such a solution, take pure caustic lime, obtained by heating Carara marble among charcoal in a furnace; when sufficiently roasted to convert it into quicklime, slake it with water, and pour upon the slaked lime as much water as is necessary to produce a milky liquor; put this milky liquor in a bottle, and add thereto, *in the cold*, a certain quantity of pulverised sugar-candy; close the bottle with a good cork, and shake the whole mass well. After a certain time it will be observed that the milky liquid has become very much clearer, and perhaps quite limpid; filter it, and the filtrate will be found to contain about 50 parts of lime for every 100 of sugar employed. The liquor should not be heated, because saccharate of lime is much more soluble in cold than in hot water, and if heat were applied it would become turbid or thick, though on cooling it would become clear again.*

A concentrated solution of lime in sugar being thus obtained, it should now be diluted to such a degree that 1000 water-grains' measure of it may be capable of saturating exactly one equivalent of any acid, which is done as follows:—Take 100 grains of hydrochloric acid of specific gravity 1·1812, that weight of acid contains exactly one equivalent = 36·5 of pure hydrochloric acid gas; on the other hand, fill the acidimeter up to 0 (zero) with the solution of caustic lime in sugar prepared as abovesaid, and pour the contents into the acid until exact neutralisation is obtained, which is known by testing with litmus-paper in the usual manner already described. If the whole of the 100 divisions of the acidimeter had been required exactly to neutralise the 100 grains' weight of hydrochloric acid of the specific gravity mentioned, it would have been a proof that it was of the right strength; but suppose, on the contrary, that only 50 divisions of the lime solution in the acidimeter have been sufficient for the purpose, it is evident that it is half too strong, or, in other words, one equivalent of lime (=28) is contained in those 50 divisions instead of in 100. Pour, therefore, at once, 50 divisions or measures of that lime-liquor into a glass cylinder accurately divided into 100 divisions, and fill up the remaining 50 divisions with water; stir the whole well, and 100 divisions of the lime-liquor will, of course, now contain as much lime as was contained before in the 50; or, in other words, 100 acidimetrical divisions will now contain 1 equivalent of lime, and therefore will be capable of exactly neutralising 1 equivalent of any acid.

When, however, saccharate of lime is used for the determination of sulphuric acid, it is necessary to dilute it considerably, for otherwise a precipitate of sulphate of lime would be produced. This reagent, moreover, is evidently applicable only to the determination of such acids the lime salts of which are soluble in water.

Instead of a solution of caustic lime in sugar, a clean dry piece of white Carara marble may be used. Suppose, for example, that the acid to be assayed is acetic acid, the instructions given by Brande are as follows:—A clean dry piece of marble is selected and accurately weighed; it is then suspended by a silk thread into a known quantity of the vinegar or acetic acid to be examined, and which is cautiously stirred with a glass rod, so as to mix its parts, but without detaching any splinters from the weighed marble, till the whole of the acid is saturated, and no further action on the marble is observed. The marble is then taken out, washed with distilled water, and weighed; the loss in weight which it has sustained may be considered as equal to the quantity of acetic acid present, since the atomic weight of carbonate of lime (=50) is very nearly the same as that of acetic acid (=51). Such a process, however, is obviously less exact than those already described.

But, whichever base is employed to prepare the test-liquor, it is clear that the acid tested with it must be so far pure as not to contain any other free acid than that for which it is tested, for in that case the results arrived at would be perfectly fallacious. Unless, therefore, the operator has reason to know that the acid, the strength of which has to be examined by that process, is genuine of its kind, he must make a qualitative analysis to satisfy himself that it is so; for in the contrary case the acid would not be in a fit state to be submitted to an acidimetrical assay.

The strength of acids may also be ascertained by determining either the *volumes* or the *weight* of carbonic acid gas disengaged from pure bicarbonate of soda by a given weight of any acid.

For *measuring* exactly the volumes of carbonic acid thus expelled, Dr. Ure's appa-

* The directions given by M. Violette for the preparation of Saccharate of Lime are as follow:—Digest in the cold 50 grammes of slaked caustic lime in 1 litre of water containing 100 grammes of sugar.

Digitized by Google

ratus, represented in the figure, may be used. As it is absolutely requisite, for the success of the experiment, that the whole of the acid taken for examination should be completely saturated, the operator must accordingly take care to use a little more bicarbonate than is necessary for the purpose.

Now the equivalent number of bicarbonate of soda is 75, and the carbonic acid contained therein = 44; that of oil of vitriol is 49; wherefore by mixing together 75 grains of pure bicarbonate of soda with 49 grains of pure oil of vitriol, 44 grains of carbonic acid gas will be expelled, equal in bulk or volume to 2381 acidimetrical divisions (23,810 water-grains' measure). These proportions, however, would be inconvenient, the more especially as the acidimeter in question should contain exactly 10,000 water-grains' measure, marked in series of 10 divisions from 0 (zero) at the top down to 100, such an arrangement at once enabling the operator to read off the amount of real acid *per cents.*; and accordingly a weight, or proportion of acid capable of disengaging exactly 10,000 water-grains' measure of carbonic acid from a quantity of bicarbonate more than sufficient to supersaturate it is used. That weight or portion varies, of course, with each kind of acid, thus:—

For anhydrous sulphuric acid it is	- -	16·80 grains.
„ Oil of vitriol - - - -	-	20·58 „
„ Anhydrous nitric acid - - -	-	22·67 „
„ „ hydrochloric acid	- -	15·33 „
„ „ acetic acid - -	-	21·42 „
„ Crystallised citric acid - -	-	80·64 „
„ „ tartaric acid - -	-	63·00 „

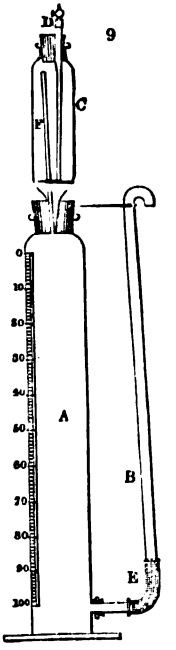

Therefore by taking, of any sample of acid to be examined, the exact number of grains corresponding to each of the above-mentioned acids, we shall obtain a volume of carbonic acid gas proportioned to the strength and purity of the sample of each of them respectively. The *modus operandi* is as follows:—Charge the glass cylinder A with water, and pour upon the surface of the latter a layer of olive oil, about 1 inch in thickness, so that the level corresponds exactly to the 0 (zero) of the graduated scale etched on the glass cylinder. Through the cork in the mouth of the cylinder, push the taper tail of the flask, C, air-tight; introduce into this flask C about 50 grains of bicarbonate of soda, in powder, and pour upon them a little more water than is sufficient to cover the powder; and if, for example, the object is to determine the amount of pure oil of vitriol contained in a given sample of that acid, weigh now accurately 20·58 grains of that sample, dilute it with water, and suck it up into the taper dropping-glass tube, D; shut the stopcock, introduce the dropping-tube, pushing it air-tight through the perforated cork until its extremity plunges into the mixture of bicarbonate of soda and water in the flask, C. On opening now slightly the stopcock of the dropping-tube, the acid contained therein coming in contact with the bicarbonate will cause the evolution of a volume of carbonic acid proportioned to its strength. Supposing the same sample of sulphuric acid which was found by the acidimetrical process first described to contain 29·89 of oil of vitriol, or 24·4 of anhydrous sulphuric acid, per cent., to be now examined by the present method, it will be found that the 20·58 grains of that acid taken for the experiment have disengaged a volume of carbonic acid gas corresponding nearly to the number 30 of the graduated scale of the glass cylinder, thereby indicating nearly 30 per cent. of pure oil of vitriol in the sample under consideration.

In the same manner the sample of hydrochloric acid, which by the former process was found to contain 32·85 per cent. of pure hydrochloric acid, would now disengage a volume of carbonic acid gas which would depress the level of the water in the glass cylinder nearly to the point marked 33, and therefore the operator would at once know that the quantity of pure hydrochloric acid gas contained in the sample was a little less than 33 per cent., a degree of accuracy quite sufficient for all commercial purposes, and which might besides be rendered still more accurate by lengthening the glass cylinder and diminishing its bore, so that the divisions may be sufficiently distant as to admit of being subdivided into fractions.

The principal objection to this form of acidimeter, however, is its expense, and also the difficulty or trouble of introducing into it *the whole* of the accurately weighed quantity of acid, a circumstance which renders it less applicable to acidimetry than to alkalimetry. By suppressing, however, the top flask, C, and using instead of it a

Digitized by Google

common Florence flask, connected with the cylinder, the cost is considerably reduced, and the operator is at once enabled to secure the complete reaction of the whole of the accurately weighed acid upon the bicarbonate of soda. The arrangement has, besides, several other advantages, which the simple inspection of the annexed figure renders apparent. It consists of a 10,000 water-grains'-measure glass cylinder, A, graduated in the same manner, and provided with a discharge tube, B, as before; but the mouth of the cylinder need not be larger than that of an ordinary wine bottle, which allows of its being corked air-tight with greater ease and certainty. This cork is perforated, and provided with a tube passing air-tight through it, and connected — by a length of vulcanised india-rubber, C — with the disengagement tube of an ordinary Florence flask, into which the bicarbonate of soda and a certain quantity of water has been previously introduced, and likewise a small test-tube, E, containing the exactly weighed quantity of acid to be examined. All the joints being perfectly air-tight, if the Florence flask be now carefully tilted on one side, a portion of the acid in the test-tube will, of course, flow down upon the bicarbonate of soda, and a corresponding quantity of carbonic acid gas being evolved will depress the water in the glass cylinder, causing an overflow from the tube B, which should be held over a basin, and progressively lowered so as to keep the discharging aperture on a level with the descending water in the cylinder. The operation is terminated when, all the acid in the test-tube having been completely upset and all effervescence being entirely at an end, the level of the water in the cylinder A remains stationary; the number of divisions of the scale corresponding to that level are then read off; they indicate the per-centage strength of the sample.

10

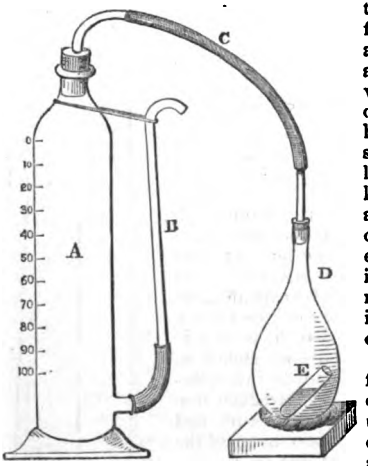

The bicarbonate of soda of commerce frequently contains some neutral carbonate of soda, which should be removed before using it for that and for the following process; this is easily done by washing it with a moderate quantity of *cold* water, which dissolves the neutral carbonate, but leaves the greater portion of the bicarbonate in an undissolved state; it should then be dried spontaneously by spreading it in the air, and then kept in stoppered bottles; for though bicarbonate of soda does not undergo decomposition by exposure to dry air, a moist atmosphere converts a portion of it into a neutral carbonate, with 5 equivalents of water (NaO, CO^2 5HO).

11 12

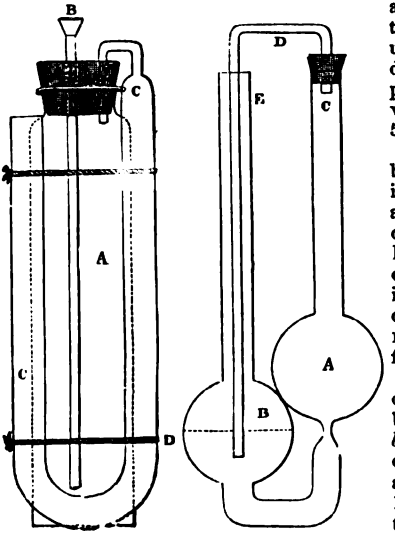

Acidimetrical operations may likewise be performed by determining the *weight* instead of the volumes of the carbonic acid expelled from bicarbonate of potash, or of soda, by a given quantity of acid. For this purpose either of the apparatus contrived by Dr. Ure, and represented in the margin, may be used. The details of their construction are given in ALKALIMETRY, to which the reader is referred.

Since 1 equivalent of any acid will disengage 2 equivalents (= 44) of carbonic acid from 1 equivalent (= 75) of *bicarbonate* of soda, it is evident that by determining what quantity of any pure acid is capable of disengaging or expelling 10 grains of carbonic acid gas, then taking that quantity of the acid to be

Digitized by Google

examined, and causing it to react upon a mass of bicarbonate of soda more than sufficient to saturate or neutralise it (in order to make sure that the acid has produced all its effect), the loss sustained after the operation from the carbonic gas expelled, multiplied by ten, will at once indicate the exact per-centage of real acid contained in the sample examined. Of course the weight of acid capable of disengaging exactly 10 grains of carbonic acid gas varies with each kind of acid; and that weight is found by dividing 10 times the atomic weight of the acid, whatever it may be, by 44; that is to say, by the atomic weight of the two equivalents of carbonic acid gas contained in the bicarbonate of soda.

For sulphuric acid, for example, the proportion would be as follows: —

$$2\,CO^2 \quad SO^3$$
$$44 : 40 :: 10 : x$$
$$x = 9{\cdot}09 \text{ (or more correctly, } 9{\cdot}1).$$

Applying this rule, the weights to be taken are as follows, in reference to —

Dry sulphuric acid - - - - -	9·1
„ nitric acid - - - - -	12·27
„ hydrochloric acid - - -	8·29
„ acetic (dry) - - - -	11·59
Crystallised tartaric acid - - -	34·09
„ citric acid - - -	43·64

Each of these quantities of real acid, with 25 or 26 grains of bicarbonate of soda, will give off 10 grains of carbonic acid gas; and hence, by adding a cypher, that is, multiplying by ten, whatever weight the apparatus loses denotes the per-centage of acid in the sample under trial, without the necessity of any arithmetical reduction. Let us suppose, for example, that the apparatus, being charged with 9·1 grains of a sample of sulphuric acid, is found, after the experiment, to have lost 7·5 grains; this multiplied by 10 = 75·0; therefore the sample contained 75 per cent. of dry sulphuric acid. If the apparatus had lost 2·44 grains thus, it would have indicated 24·4 per cent. of dry or anhydrous acid. Persons accustomed to the French metrical system may use decigrammes instead of grains, and they will arrive at the same per-centage results.

Another apparatus for ascertaining the weight of carbonic expelled for the purposes of either acidimetry or alkalimetry, and which the operator himself may readily construct, is represented in *fig.* 13.

13

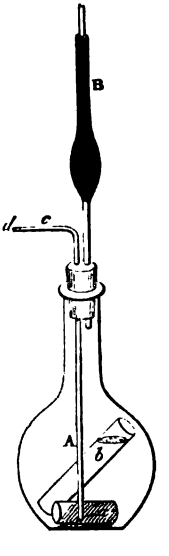

A is a small matrass, with a somewhat wide mouth, capable, however, of being hermetically closed by a cork perforated with two holes, through one of which a bulbous tube, B, passes filled with fragments of chloride of calcium; through the other hole a tube, *c*, is introduced, sufficiently long to reach the bottom of the matrass A.

A certain quantity (say 25 grains) of bicarbonate of soda, greater than is required for saturation, is then introduced into the matrass A, and likewise enough water to cover it. A small glass test-tube is next charged with the proper quantity of the acid to be examined, namely, 9·1 if for sulphuric acid, 12·27 if for nitric acid, &c. &c., as before-mentioned, and it is carefully introduced into the matrass A, taking care that the acid does not come in contact with the bicarbonate of soda, which is easily avoided by lowering the tube containing the acid into the matrass with a thread, or by carefully sliding it down, and keeping it nearly in an upright position, leaning against the sides of the matrass, as shown by the letter *b*. The matrass is then to be closed with the cork provided with its tubes, as above directed, and the whole is accurately weighed. This done, the apparatus is gently jerked, or tilted, on one side, so as to cause a portion of the acid in the tube *b* to flow among the bicarbonate of soda on which it is resting. A disengagement of carbonic acid gas immediately takes place from the decomposition of the carbonate of soda by the acid. When the violent effervescence has subsided, a fresh quantity of acid is again jerked, or spilled, out of the tube, until the whole of the acid is emptied, the tube occupying now a horizontal position, as represented by letter A. The water, which is mechanically carried off by the carbonic acid, is arrested by the chloride of calcium of the bulbous tube B. When all disengagement of carbonic acid gas has ceased, even after shaking the apparatus, the residuary

Digitized by Google

gas is sucked up through the bulbous tube B, while the atmospheric air enters at the orifice, *d*, of the bent tube, *c*, to replace it. If the apparatus has become warm during the reaction, it should be allowed to cool completely, and it is then weighed again accurately. The difference between the first and second weighing, the loss represents, of course, the weight of the carbonic acid gas expelled, and consequently the per-centage of real acid contained in the sample.

Instead of the preceding arrangement, the apparatus contrived by Drs. Fresenius and Will may be used. The figure in the margin at once renders the construction

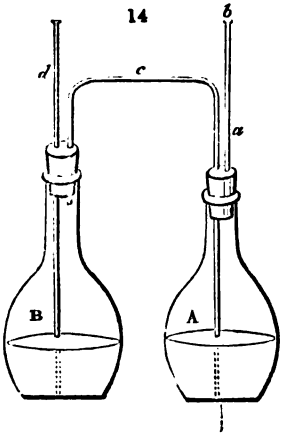

of that apparatus intelligible, and as a full description of it is given in the article on ALKALIMETRY, the reader is accordingly referred thereto. When that contrivance is used for acidimetrical purposes, proceed as follows:—Fill bottle A with ordinary oil of vitriol to about one-half of its capacity, and pour into bottle B the accurately weighed quantity of acid to be examined, namely, 9·1 grains for sulphuric acid, 12·27 for nitric acid, &c. &c., according to the rule and table given (page 29), and dilute it with water, so that bottle B may be one-third full. Put now into a test-tube a quantity of bicarbonate of soda sufficient to saturate the weight of acid contained in bottle B, and suspend it into that bottle by means of a thread, kept tight by the pressure of the cork. Weigh now the whole apparatus accurately; this done, carefully loosen the thread, so that the test-tube charged with bicarbonate of soda may fall into the acid, and the cork being instantly adjusted air-tight, the whole of the carbonic acid gas disengaged is led by tube *c* into the concentrated sulphuric acid of bottle A, which absorbs all its moisture before it finally escapes through the tube *a*. When all effervescence has ceased, the operator, by applying his lips to that tube *a*, sucks out all the residuary carbonic acid gas contained in the apparatus, and replaces it by atmospheric air, which enters at *d*. The apparatus, if it have become warm, should be allowed to cool completely, and on weighing it again the loss indicates the per-centage of real acid present in the sample.

The balance used in these methods should, of course, be sufficiently delicate to indicate small weights when heavily laden.

We shall terminate this article by a description of Liebig's acidimetrical method of determining the amount of prussic acid contained in solutions; for example, in medicinal prussic acid, in laurel and bitter-almond water, essence of bitter almonds, and cyanide of potassium. The process is based upon the following reaction:—When an excess of caustic potash is poured in a solution which contains prussic acid, cyanide of potassium is, of course, formed; and if nitrate of silver be then poured in such a liquor, a precipitate of cyanide of silver is produced, but it is immediately redissolved by shaking, because a double cyanide of silver and of potassium (Ag Cy + K Cy) is formed, which dissolves, without alteration, in the excess of potash employed. The addition of a fresh quantity of nitrate of silver produces again a precipitate which agitation causes to disappear as before; and this reaction goes on until *half* the amount of prussic acid present in the liquor has been taken up to produce cyanide of silver, the other *half* being engaged with the potassium in the formation of a double cyanide of silver and of potassium, as just said. As soon, however, as this point is reached, any new quantity of nitrate of silver poured in the liquor causes the cyanide of potassium to react upon the silver of the nitrate, to produce a *permanent* precipitate of cyanide of silver, which indicates that the reaction is complete, and that the assay is terminated. The presence of chlorides, far from interfering, is desirable, and a certain quantity of common salt is accordingly added, the reaction of chloride of silver being analogous to that of the cyanide of the same metal.

To determine the strength of prussic acid according to the above process, a test or normal solution should be first prepared, which is as follows:—

Since 1 equivalent of nitrate of silver (=170) represents, as we have seen, 2 equivalents of prussic acid (=54), dissolve, therefore, 170 grains of pure fused nitrate of silver in 10,000 water-grains' measure of pure water; 1000 water-grains' measure (1 acidimeter full) of such solution will therefore contain 17 grains of nitrate of silver, and will therefore represent 5·4 grains of prussic acid; and consequently each acidimetrical division 0·054 grain of pure prussic acid.

Digitized by Google

Take now a given weight or measure of the sample of prussic acid, or cyanide of potassium, or laurel, or bitter-almond water, or essence of bitter almonds; dilute it with three or four times its volume of water, add caustic potash until the whole is rendered alkaline, and carefully pour into it a certain quantity of the normal silver solution from the acidimeter until a slight precipitate begins to appear which cannot be redissolved by agitation; observe the number of acidimetrical divisions of the test silver solution employed, and that number multiplied by 0·054 will, of course, indicate the proportion of prussic acid present in the quantity of the sample operated upon.

For such liquids which, like laurel-water, contain very little prussic acid, it is advisable to dilute the test silver liquor with nine times its bulk of water; a decimal solution is thus obtained, each acidimetrical division of which will only represent 0·0054 of prussic acid, by which figure the number of divisions employed should then be multiplied.

As the essence of bitter almonds mixed with water is turbid, it is absolutely necessary to add and shake it with a sufficient quantity of water to dissolve the particles of oil to which the milkiness is due, and render it quite clear.

Instead of an acidimeter, an ordinary balance may be used as follows:—Take 63 grains of fused nitrate of silver, and dissolve them in 5937 grains weight of pure distilled water, making altogether 6000 grains weight of test silver solution. Weigh off now in a beaker any quantity, say 100, or, if very weak, 1000 grains' weight of the sample of prussic acid to be examined, dilute it with three or four times its bulk of water, mix with it a certain quantity of a solution of common salt, and a few drops of caustic potash over and above the quantity necessary to make it alkaline. Pour now carefully into the liquor so prepared a portion of the test solution of silver alluded to, until a turbidness or milkiness begins to be formed which does not disappear by agitation, and which indicates that the reaction is complete. Every 300 grains of the test silver solution employed represents 1 grain weight of pure anhydrous prussic acid.

The rationale of these numbers is evident: since 1 equiv. = 170 of nitrate of silver correspond to 2 equiv. = 54 of prussic acid; 63 of nitrate of silver correspond to 20 of prussic acid, and consequently 300 of a solution containing 63 of nitrate of silver in 6000 correspond to 1 of prussic acid thus:—

170 : 54 :. 63 : 20
6000 : 20 :: 300 : 1

Lastly, the strength of prussic acid may also be determined with an ordinary balance by a method proposed by Dr. Ure, which method, however, is much less convenient than that of Liebig; it consists in adding peroxide of mercury, in fine powder, to the liquor which contains prussic acid, until it ceases to be dissolved. As the equivalent of peroxide of mercury = 108, is exactly four times that of prussic acid = 27, the weight of peroxide of mercury employed divided by four will give the quantity of prussic acid present.*—A. N. See SULPHYDROMETRY.

ACIPENSER. A genus of cartilaginous fishes, to which the Sturgeon belongs, and from which isinglass is obtained. See ISINGLASS.

ACONITINE. $C^{60}\,H^{47}\,NO^{14}$. A poisonous alkaloid constituting the active principle of the Aconite, *Aconitum Napellus*.—C. G. W.

ACONITUM. (*ἀκόνιτον*.) The Greek name for the Hemlock, a genus of plants belonging to the *Ranunculaceæ*, nearly all the species being remarkable for their poisonous properties.

ACORNS. The seed of the oak (*quercus*). These possess some of the properties of the bark, but in a very diluted degree. Acorns are now rarely used. Pigs are sometimes fed upon them.

ACORUS CALAMUS. The common sweet flag. This plant is a native of England, growing abundantly in the rivers of Norfolk, from which county the London market is chiefly supplied. The *radix calami aromatica* of the shops occurs in flattened pieces about one inch wide and four or five inches long. It is employed medicinally as an aromatic, and it is said to be used by some distillers to flavour gin. The essential oil (*oleum acori calami*) of the sweet flag is used by snuff-makers for scenting snuff, and it sometimes enters as one of the aromatic ingredients of aromatic vinegar.—*Pereira.*

ACROSPIRE. (*Plumule*, Fr.; *Blattkeim*, Germ.). The sprout at the end of seeds when they begin to germinate. Malsters use the name to express the growing of the barley. "The first leaves that appear when corn sprouts."—*Lindley.*

ACRYLAMINE, or ALLYLAMINE. ($C^6\,H^7\,N$.) A new alkaloid obtained by

* The methods of estimating the amount of hydrosulphuric acid (sulphuretted hydrogen) and of metallic sulphurets in mineral waters, &c, will be found under the head SULPHYDROMETRY.

Digitized by Google

Hofmann and Cahorns, by boiling cyanate of allyle with a strong solution of potash. It boils at about 365°.—C. G. W.

ACTINISM. (From ἀκτὶν, a ray; signifying merely the *power* of a ray, without defining what character of ray is intended.)

As early as 1812, M. Berard (in a communication to the Academy of Sciences, on some observations made by him of the phenomena of solar action) drew attention to the fact, that three very distinct sets of physical powers were manifested. Luminous power, Heat-producing power, and Chemical power. Chaptal, Berthollet, and Biot reported on this paper by M. Berard; and, as showing the extent to which this very important inquiry had proceeded in the hands of this philosoper, the following quotation is given from their report.

"M. Berard found that the chemical intensity was greatest at the violet end of the spectrum, and that it extended, as Ritter and Wollaston had observed, a little beyond that extremity. When he left substances exposed for a certain time to the action of each ray, he observed sensible effects, though with an intensity continually decreasing, in the indigo and blue rays. Hence we must consider it as extremely probable, that if he had been able to employ reactions still more sensible, he would have observed analogous effects, but still more feeble, even in the other rays. To show clearly the great disproportion which exists in this respect between the energies of different rays, M. Berard concentrated, by means of a lens, all that part of the spectrum which extends from *the green to the extreme violet*, and he concentrated, by another lens, all that portion which extends from the *green to the extremity of the red ray*. This last pencil formed a white point, so brilliant that the eyes were scarcely able to endure it, yet the muriate of silver remained exposed more than two hours to this brilliant point of light, without undergoing any sensible alteration. On the other hand, when exposed to the other pencil, which was much less bright and less hot, it was blackened in less than six minutes. * * * * * If we wish to consider solar light as composed of three distinct substances, one which occasions *light*, another *heat*, and the third *chemical combinations*, it will follow that each of those substances is separable by the prism into an infinity of different modifications, like Light itself; since we find, by experiment, that each of the three properties, *chemical*, *calorific*, and *colourific*, is spread, though unequally, over a certain extent of the spectrum. Hence we must suppose, on that hypothesis, that there exists *three spectrums* one above another; namely, a calorific, a colourific, and a chemical spectrum."

This was the earliest indication of the probable existence of a physical force, in the solar rays, distinct from Light and Heat. A large number of philosophers still hold to the idea that the chemical changes produced by the sunbeam are due to *light*, and this idea is confirmed in the public mind by the universal adoption of the term *photography* (light-drawings) to indicate the production of pictures by the agency of the sunbeam. See PHOTOGRAPHY.

The actual conditions of the sunbeam will be understood by reference to the annexed woodcut, and attention to the following description, *fig.* 15: *a b* represents the prismatic spectrum—as obtained by the decomposition of white light by the prism—or Newtonian luminous spectrum, consisting of certain bands of colour. Newton determined those rays to be seven in number; red, orange, yellow, green, blue, indigo, and violet; recent researches, by Sir John Herschel and others, have proved the existence of two other rays; one, the extreme red or crimson ray *c*, found at the least refrangible end of the spectrum, the other occurring at the most frangible end, or beyond the violet rays, which is a lavender or grey ray. Beyond this point up to *f*, Professor Stokes has discovered a new set of rays, which are only brought into view when the light is received upon the surfaces of bodies which possess the property of altering the refrangibility of the rays. Those rays have been called the *fluorescent rays*, from the circumstance that some of the varieties of Fluor Spar exhibit this phenomenon in a remarkable manner. (See FLUORESCENCE.) The curved line L from *a* to *c* indicates the full extent of the luminous spectrum, the point marked L showing the maximum of illuminating power, which exists in the yellow ray.

15

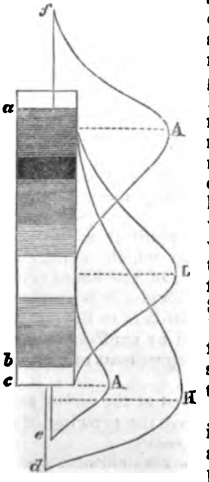

Sir William Herschel and Sir Henry Englefield determined, in the first instance, the maximum point for the calorific rays, and Sir John Herschel subsequently confirmed their results, proving that the greatest heat was found below the red ray, and that it gradually diminished in power with the increase of refrangibility in the

Digitized by Google

rays, ceasing entirely in the violet ray. Heat rays have been detected down to the point *d*, and the curved line H indicates the extent of their action.

Now, if any substance capable of undergoing chemical change be exposed to this spectrum, the result will be found to be such as is represented in the accompanying figure and *fig.* 16. Over the space upon which the greatest amount of light falls, *i.e.* the region of the yellow and orange rays L, no chemical change is effected: by prolonged action a slight change is brought about where the red ray falls, *r*, but from the mean green ray G up to the point *f*, a certain amount of chemical action is maintained; the maximum of action being in the blue and violet rays A. Thus the curve line (*fig.* 15) from *e* to *f* represents the extent and degree of chemical power as manifested in the solar spectrum. Two maxima are marked A A, differing widely however in their degree.

16

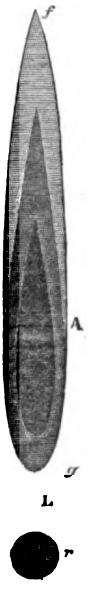

Here, as in Berard's experiments, we see that where the *light* is the strongest, there is no chemical action, and that as the luminous power diminishes the chemical force is more decidedly manifested.

Again, we find that if we take a piece of yellow glass, stained with oxide of silver, we have a medium which entirely prevents the permeation of the chemical rays, though it obstructs no Light. But, if a very dark blue glass is taken, we find that ninety per cent. of the luminous rays are obstructed, while the chemical rays permeate it most freely. Numerous experiments of an analogous character appear to prove that the chemical and luminous powers of the sunbeam are balanced against each other (see Hunt's "Researches on Light"), that they are indeed antagonistic principles or powers. That there are three very distinct sets of phenomena, every one admits.

Light (*luminous power*), to which belongs the phenomena of vision and the production of colour.

Heat (*calorific power*), the function of which appears to be the determining the physical condition of all matter, as regards its solid, fluid, or gaseous condition.

Actinism (*chemical power*), to which all the phenomena of photography are due, and many of the more remarkable changes observed in the vegetable kingdom.

ACTINOGRAPH. A name given to an instrument for recording the variations in the chemical (*actinic*) power of the solar beams. The name signifies *ray writer*.

ACTINOMETER. (*Ray measurer.*) The name of various forms of instruments, the objects of which are to measure the direct heat radiations from the sun. The term has also been applied to instruments employed to measure the varying intensities of Light.

ADDITIONS. Such articles as are added to the fermenting wash of the distiller, were of old distinguished by this trivial name.

ADHESION (*sticking together*). The union of two surfaces. With the phenomena which are dependent upon bringing two surfaces so closely together that the influence of *cohesion* is exerted we have not to deal. In arts and manufactures, adhesion is effected by interposing between the surfaces to be united, some body possessing peculiar properties, such as gum, plaster, resin, marine or ordinary glue, and various kinds of cement. *Adhesion* should be restricted to mean, sticking together by means of some interposed substance; *cohesion*, the state of union effected by natural attraction.

Not only is adhesion exhibited in works of art or manufacture; we find it very strikingly displayed in nature. Fragments of rocks which have been shattered by convulsion are found to be cemented together by silica, lime, oxide of iron, and the like; and broken parts of mineral lodes are frequently reunited by the earthy minerals.

ADIPIC ACID. (C^{12} H^{10} O^{8}.) One of the fixed fatty acids produced by the action of nitric acid on oleic acid, suet, spermaceti, and other fatty bodies. See Watts' "Dictionary of Chemistry."

ADIPOCIRE. From *adeps*, fat; *cera*, wax. (*Adipocire*, Fr.; *Fettwachs*, Germ.) The fatty matter supposed to be generated in dead bodies buried under peculiar circumstances. It is chiefly *margarate of ammonia*. In 1786 and 1787, when the churchyard of the *Innocents*, at Paris, was cleaned out, and the bones transported to the Catacombs, it was discovered that not a few of the *cadavres* were converted into a saponaceous white substance, more especially many of those which had been interred for fifteen years in one pit, to the amount of 1500, in coffins closely packed together. These bodies were flattened in consequence of their mutual pressure; and, though they generally retained their shape, there was deposited round the bones of several a

Digitized by Google

greyish white, somewhat soft, flexible substance. Fourcroy presented to the Academy of Sciences, in 1789, a memoir which appeared to prove that the fatty body was an ammoniacal soap containing phosphate of lime; that the fat was similar to spermaceti, as it assumed, on slow cooling, a foliated crystalline structure; as also to wax, as, when rapidly cooled, it became granular; hence he called it *adipocire*. Its melting point was 52·5° C. (126·5° F.)

This substance was again examined by Chevreul, in 1812, and was found by him to contain margaric acid, oleic acid, combined with a yellow colouring odorous matter, besides ammonia, a little lime, potash, oxide of iron, salts of lactic acid, an azotised substance; and was therefore considered as a combination of margaric and oleic acids, in variable proportions. These fat acids are obviously generated by the reaction of the ammonia upon the margarine and oléine, though they eventually lose the greater part of that volatile alkali. It is sometimes confounded with chlorestine. See FAT and FATTY BODIES.

Bog butter is said to be a similar substance; and ADIPOCIRE is a synonyme of Hatchettine, or rock fat.

ADIPOSE SUBSTANCE or ADIPOSE TISSUE. (*Tissu graisseux*, Fr.) An animal oil, resembling in its essential properties the vegetable oils. During life, it appears to exist in a fluid or semi-fluid state; but, in the dead animal, it is frequently found in a solid form, constituting *suet*, which, when divested of the membrane in which it is contained, is called *tallow*. See TALLOW, OILS, &c.

ADIT, or ADIT LEVEL. The horizontal entrance to a mine; a passage or level driven into the hill-side. The accompanying section gives, for the purpose of distinctness, an exaggerated section of a portion of the subterranean workings of a metalliferous mine. It should be understood that *d* represents a minerallode, upon which the *shaft*, *a*, has been sunk. At a certain depth from the surface of the hill the miners would be inconvenienced by water, consequently a level is *driven* in from the side of the hill, *b*, through which the water flows off, and through which also the miner can bring out the broken rock, or any ores which he may obtain. Proceeding still deeper, supposing the workings to have commenced, as is commonly the case, at a certain elevation above the sea-level, similar conditions to those described again arising, another level is driven so as to intersect the shaft or shafts, as shown at *c*. In this case, *b* would be called the *shallow*, and *c* the *deep* adit. The economy of such works as these is great, saving the cost of expensive pumping machinery, and, in many cases, saving also considerable labour in the removal of ores or other matter from the mine.

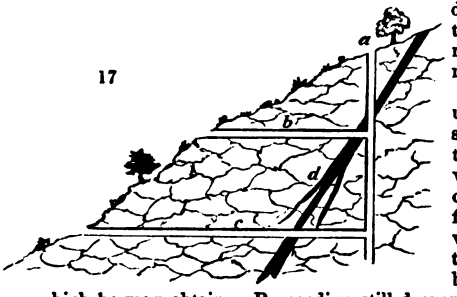

The great Gwennap Adit, in Cornwall, with its branches, was cut through the solid rock for nearly 30 miles; through it numerous mines are drained to a certain depth, and the water pumped from greater depths discharged. The Nentforce Level, or Adit, in Alston Moor, has been wrought under the course of the river Nent, and it extends about 3¼ miles into that important mining district. See MINING.

ADULTERATION. The practice of debasing any product of manufacture by the introduction of cheap and often injurious materials.

The extent to which the adulteration of almost every useful article is carried, is at once a disgrace to the trading community, and a standing reflection on an age which boasts of its high moral character.

ADZE. A cutting instrument; differing from the axe by the edge being placed at nearly right angles to the handle, and being slightly curved up or inflected towards it. The instrument is held in both hands, whilst the operator stands upon his work in a stooping position; the handle being from twenty-four to thirty inches long, and the weight of the blade from two to four pounds. The adze is swung in a circular path almost of the same curvature as the blade, the shoulder joint being the centre of motion, and the entire arm and tool forming, as it were, one inflexible radius; the tool, therefore, makes a succession of small arcs, and in each blow the arm of the workman is brought in contact with the thigh, which serves as a stop to prevent accident. In coarse preparatory works, the workman directs his adze through the space between his two feet; he thus surprises us by the quantity of wood removed; in fine works he frequently places his toes over the spot to be wrought, and the adze penetrates two or three inches beneath the sole of the shoe; and he thus surprises us

Digitized by Google

by the apparent danger, yet perfect working of the instrument, which, in the hands of a shipwright in particular, almost rivals the joiner's plane; it is with him the nearly universal paring instrument, and is used upon works in all positions. — *Holtzapffel.*

ÆOLIAN HARP. A musical instrument; the invention of Kircher; although it was probably indicated by Hero of Alexandria. The musical sounds are produced by the action of a current of air upon strings placed above a long box of thin deal. The wires of the electric telegraph on the sides of our railroads are frequently set in such a state of vibration by the wind, that they become gigantic Æolian harps.

AERATED WATER. The common commercial name of water artificially impregnated with carbonic acid or oxygen.

AEROLITES. Meteoric stones. It cannot be denied that masses of solid matter have fallen from the atmosphere upon this earth. Various hypotheses have been proposed to account for them; amongst others the following may be named:—

1. That they are aggregations of solid matter which take place in the higher regions of the air. When we remember that hydrogen gas will *dissolve*, and carry off in an invisible state many of our metals, and that all known metals are volatile under certain conditions of heat, it will be evident that such combinations might take place.

2. That they are projected from volcanoes in the moon. The researches of Nasmyth, Smyth, and others appear to prove that our satellite, whatever may have been her condition at one period, is now in a state of repose; nothing like an active volcano has been discovered on the moon's surface.

3. That belts composed of fragments of matter circulate in certain fixed orbits around the sun, and that these fragments, sometimes entering our atmosphere, are involved in the Earth's influences, and fall in obedience to the law of gravitation. The flights of "shooting stars" which are observed at particular periods appear to favour this view.

It is evident that meteoric stones are of cosmical origin; and the composition, therefore, of such as have been examined, shows us the composition of masses of matter existing beyond the earth. A few analyses of meteoric stones will exhibit the chemical character of these extraordinary masses.

	(1)	(2)	(3)	(4)
Iron	89·78	90·88	88·98	86·64
Nickel	8·88	8·45	10·35	13·04
Cobalt	0·66	0·65	—	—
Copper	—	0·02	0·21	0·27
Tin	—	—	0·34	—
Phosphorus	—	—	0·10	0·05

—*Brook and Miller.*

A meteorite fell at Dharwar, in the East Indies, on the 15th February, 1848, which gave 58·3 per cent. of silicates insoluble in *aqua regia*; 2·5 of sulphur, 6·76 of nickel, and 22·18 of iron. Another stone from Singhur, near Ponna, in the Deccan, gave earthy silicate, 19·5; iron, 69·16; and nickel, 4·24. Ehrenberg examined a black inky rain-water which fell in Ireland on the 15th of April, 1849, and found the black colour to consist of minute particles of decayed plants, which had probably been brought by the trade winds, and, floating in clouds of aqueous vapour, had decayed.

AËROSTATION; AËRONAUTICS. The ascent into the atmosphere by means of balloons.

The Montgolfier balloon is a bag filled with air which is rarefied by the action of fire; and thus the whole mass is rendered specifically lighter than the surrounding medium.

The investigations of Cavendish led to the use of hydrogen gas—the lightest of known bodies—to inflate silken bags; and since his time our balloons have been inflated with either pure hydrogen, or with common coal gas—carburetted hydrogen.

Notwithstanding the numerous attempts which have been made to navigate the air, nothing has been done to enable the aëronaut to steer his balloon. In whatever current of air he may be, with that current he moves; until this difficulty is overcome, we cannot expect any satisfactory results from aëronautics. Some interesting and useful experiments have been made by using captive balloons, by which we have arrived at some facts connected with the upper regions of the air, which could not be obtained by any other means. See BALLOONS.

ÆRUGO. (*Verdigris; carbonate of copper*, which see.) The name formerly given to the bright green rust, produced by the oxygen of the air and carbonic acid, upon copper, and its alloys bronze and brass. The Romans gave this name; they considered that the ærugo added much to the beauty of their statues; and

Digitized by Google

adjusted the composition of their alloys with the view of producing the finest green colour. This was frequently effected artificially; and to distinguish the real from the artificial they used the term *ærugo nobilis*. This is the *patina* of the Italians; it is the same as verdigris.

ÆTHER. See ETHER.

AFFINITY. The term used by chemists to denote the peculiar attractive Force which produces the combination of dissimilar substances,—as an acid with an alkali, or of sulphur with a metal. See Watts' "Dictionary of Chemistry."

AGAR-AGAR. A seaweed forming a large article of commerce in the East. It is frequently called Bengal Isinglass, from the fact of its being found largely in the Bengal market. It is used for making jellies and for stiffening purposes. See ALGÆ.

AGARICUS. A genus of the order Fungi. Many of this genus—the mushrooms—are used for food. See FUNGI.

AGARIC *of the oak;* called also *surgeon's agaric, spunk, touchwood.* A fungus found growing on the oak, birch, willow, and other trees. See AMADOU.

AGATE. An instrument used by gold-wire drawers, so called from the agate fixed in the middle of it.

AGATE. (*Agate*, Fr.; *Achat*, Gr.; *Achates*, Lat.) A siliceous mineral; a variegated variety of chalcedony.

This stone is the Ἀχάτης of the Greeks, by whom it was so called after the river in Sicily of that name, whence, according to Theophrastus, agates were first procured. Bochart, with much probability, deduces the name from the Punic and Hebrew, *nakad*, spotted.

The colours of agate are either arranged in parallel or concentric bands, or assume the form of clouds or spots, or arborescent and moss-like stains. These colours are due to the presence of metallic oxides, and when indistinct, they are frequently artificially developed or produced. By boiling the colourless stone in oil, and afterwards in sulphuric acid, the oil is absorbed by the more porous layers of the stone; it subsequently becomes carbonised, and thus the contrast of the various colours is heightened. The red varieties, also, are artificially produced by boiling them in a solution of proto-sulphate of iron; after which, upon exposing the stones to heat, peroxide of iron is formed, and thus red bands, or rings, of varying intensities, are produced. Cornelians are thus very commonly formed; the colouring matter of the true stone being a peroxide of iron.

Agates never occur in a crystalline form, but in the form of rounded pebbles; they are translucent by transmitted light, but are not transparent, have a wax-like fracture, and they are susceptible of a brilliant polish.

Agates are used in the arts for inlaying, and for burnishing gold and silver: they are also made into mortars for chemical purposes; and when cut and polished, they are converted, in considerable quantities, into brooches, bracelets, and other ornamental articles.

Agates are brought to this country from Arabia, India, and Oberstein, in Saxony: they are also found in Perthshire, and other parts of Scotland. The Scotch Pebble is a variety of the agate, known by its zigzag pattern as the *Fortification Agate.*

Agates are found frequently in the amygdaloid rocks of Galgenburg, near Oberstein. They are usually ground into form, cut, and polished, at water-mills in the neighbourhood, where a considerable trade in them is carried on.

Moss Agate, or *Mocha Stone*, is a chalcedony, containing within it dendritic or moss-like delineations, of an opaque brownish-yellow colour, which are due to oxide of manganese, or of iron.—H. W. B.

Agates are found in the Canton markets, as articles of commerce, in abundance, and of the following varieties: The white-veined agate, called also Mocha Stone, varies from 1 to 8 inches in diameter. The dull milky agate, not so valuable, occurs in sizes of 1 to 10 inches.

Lead-coloured agate, sometimes uniform, and sometimes spotted, occurs of large size, and is used for cups and boxes. Flesh-coloured. Blood-coloured. This is sometimes variegated with pale-blue and brown; the blue always surrounds the red; the brown has the tint of horn.

Clouded and spotted flesh-coloured agate is found subject to many flaws.

Red agate, with yellow, is of 1 to 4 inches in diameter.

The yellow has various tints. Sometimes the pebbles are 7 inches in length. The yellow agate is used for knife-handles.

The pale-yellow agate is very scarce; it is called also Leonina, being variegated with white, black, and green, and bearing some resembance to a lion's skin.

Blackish-veined brown agate, in pieces from 2 to 7 inches in diameter, is very

Digitized by Google

hard, and is cut into seals, buttons, and heads of canes, &c., with natural veins, or fictitious colours, sunk into the stone. It appears to be of much value, especially when it is found sufficiently large to be formed into mortars for chemical purposes. "The royal collection at Dresden contains a table-service of German agate, and at Vienna, in the Imperial cabinet, there is an oval dish twenty-two inches in length, formed of a single stone."—*Dana.*

Agates, as already stated, may be stained artificially. This is effected sometimes by soaking the stone in a solution of nitrate of silver, and then exposing it to the sun. This colour disappears on laying the stone for a few hours in nitric acid. A knowledge of the practicability of thus staining agates naturally leads to the suspicion that many of the colours are not the work of nature but of art.

The total importations of agates were valued in 1855 at 5,196*l.*, and in 1856 at 7,534*l.* In these returns agates and cornelians in their natural states—as also manufactured but not set - and such as were mounted as jewels, were included. Of late years they have been included under the head of "Precious Stones of the inferior class unset," the computed real value of the importations of these in 1863 being 12,380*l.*

AIR. The gaseous envelope which surrounds this Earth is emphatically so called; it consists of the gases nitrogen and oxygen.

About 79 measures of nitrogen, or azote, and 21 of oxygen, with $\frac{1}{100}$th of carbonic acid, constitute the air we breathe. The term *air* is applied to any permanently gaseous body. And we express different conditions of the air, as *good air*, *bad air*, *foul air*, &c.

AIR, COMPRESSED. For its employment in some mining operations, see MINING.

AIR-ENGINE. The considerable expansibility of air by heat naturally suggested its use as a motive power long before theoretical investigation demonstrated its actual value. The great advance made during the last few years in our knowledge of the mechanical action of heat, has enabled us to determine with certainty the practical result which may be obtained by the use of any contrivance for employing heat as a prime mover of machinery. We are indebted to Professor Wm. Thomson for the fundamental theorem which decides the economy of any thermo-dynamic engine. It is — that in any perfectly constructed engine the fraction of heat converted into work is equal to the range of temperature from the highest to the lowest point, divided by the highest temperature reckoned from the zero of absolute temperature. Thus, if we have a perfect engine in which the highest temperature is 280° and the lowest 80° F., the fraction of heat converted into force will be $\frac{280-80,}{280+460,}$ or rather more than one quarter. So that, if we use a coal of which one pound in combustion gives out heat equivalent to 10,380,000 foot pounds, such an engine as we have just described would produce work equal to 28,05,405 foot pounds for each pound of coal consumed in the furnace. From the above formula of Professor Thomson, it will appear that the economy of any perfect thermo-dynamic engine depends upon the range of temperature we can obtain in it. And as the lowest temperature is generally nearly constant, being ruled by the temperature of the surface of the earth, it follows that the higher we can raise the highest temperature, the more economical will be the engine. The question is thus reduced to this: — In what class of engine can we practically use the highest temperature? In the steam-engine worked with saturated vapour, the limit is obviously determined by the amount of pressure which can be safely employed. In the steam-engine worked with super-heated vapour—*i.e.* in which the vapour, after passing from the boiler, receives an additional charge of heat without being allowed to take up more water—and also in the air-engine, the limit will depend upon the temperature at which steam or air acts chemically upon the metals employed, as well as upon the power of the metals themselves to resist the destructive action of heat. It thus appears that the steam-engine worked with superheated steam possesses most of the economical advantages of the air-engine. But when we consider that an air-engine may be made available where a plentiful supply of water cannot be readily obtained, the importance of this kind of thermo-dynamic engine is incontestable. The merit of first constructing a practical air-engine belongs to Mr. Stirling. Mr. Ericsson has subsequently introduced various refinements, such as the respirator—a reticulated mass of metal, which, by its extensive conducting surface, is able, almost instantaneously, to give its own temperature to the air which passes through it. But various practical difficulties attend these refinements, which, at best, only apply to engines worked between particular temperatures. The least complex engine, and that which would probably prove most effectual in practice, is that described in the "Philosophical Transactions," 1852, Part I. It

Digitized by Google

consists of a pump, which compresses air into a receiver, in which it receives an additional charge of heat; and a cylinder, the piston of which is worked by the heated air as it escapes. The difference between the work produced by the cylinder and that absorbed by the pump constitutes the force of the engine; which, being compared with the heat communicated to the receiver, gives results exactly conformable with the law of Professor Thomson above described.—J. P. J.

Dr. Joule has proposed various engines to be worked at temperatures below redness, which, if no loss occurred by friction or radiation, would realise about one-half the work due to the heat of combustion; or about four times the economical duty which has, as yet, been attained by the most perfect steam-engine.

A detailed account of Ericsson's Calorific Engine may be useful, especially as a certain amount of success has attended his efforts in applying the expansive power of heat to move machinery. It is stated in Hunt's "Merchant's Magazine" that Ericsson's engines are at work in the foundry of Messrs. Hogg and Delamater, in New York; one engine being of five and another of sixty horse power. The latter has four cylinders. Two, of seventy-two inches diameter, stand side by side. Over each of these is placed one much smaller. Within these are pistons exactly fitting their respective cylinders, and so connected, that those within the lower and upper cylinders move together. Under the bottom of each of the lower cylinders a fire is applied, no other furnaces being employed. Neither boilers nor water are used. The lower is called the working cylinder; the upper, the supply cylinder. As the piston in the supply cylinder moves down, valves placed in its top, open, and it becomes filled with cold air. As the piston rises within it, these valves close, and the air within, unable to escape as it came, passes through another set of valves into a receiver, from whence it has to pass into the working cylinder to force up the working piston within it. As it leaves the receiver to perform this duty, it passes through what is called *the regenerator*, where it becomes heated to about 450°; and upon entering the working cylinder, it is further heated by the supply underneath. For the sake of illustration, merely, let us suppose that the working cylinder contains double the area of the supply cylinder: the cold air which entered the upper cylinder will, therefore, but only half fill the lower one. In the course of its passage to the latter, however, it passes through *the regenerator*; and as it enters the working cylinder, we will suppose that it has become heated to about 480°, by which it is expanded to double its volume, and with this increased capacity it enters the working cylinder. We will further suppose the area of the piston within this cylinder to contain 1000 square inches, and the area of the piston in the supply cylinder above to contain but 500. The air presses upon this with a mean force, we will suppose, of about eleven pounds to each square inch; or, in other words, with a weight of 5500 pounds. Upon the surface of the lower piston the heated air is, however, pressing upwards with a like force upon each of its 1000 square inches; or, in other words, with a force which, after overcoming the weight above, leaves a surplus of 5500 pounds, if we make no allowance for friction. This surplus furnishes the working power of the engine. It will be seen that after one stroke of its pistons is made, it will continue to work with this force so long as sufficient heat is supplied to expand the air in the working cylinder to the extent stated; for, so long as the area of the lower piston is greater than that of the upper, and a like pressure is upon every square inch of each, so long will the greater piston push forward the smaller, as a two-pound weight upon one end of a balance will be sure to bear down a one pound weight placed upon the other. We need hardly say, that after the air in the working cylinder has forced up the piston within it, a valve opens; and as it passes out, the pistons, by the force of gravity, descend, and cold air again rushes into and fills the supply cylinder. In this manner the two cylinders are alternately supplied and discharged, causing the pistons in each to play up and down substantially as they do in the steam-engine.

The regenerator must now be described. It has been stated that atmospheric air is first drawn into the supply cylinder, and that it passes through the regenerator into the working cylinder. The regenerator is composed of wire net, like that used in the manufacture of sieves, placed side by side, until the series attains a thickness of about 12 inches. Through the almost innumerable cells formed by the intersections of the wire, the air must pass on its way to the working cylinder. In passing through these it is so minutely divided that all parts are brought into contact with the wires. Supposing the side of the regenerator nearest the working cylinder is heated to a high temperature, the air, in passing through it, takes up, as we have said, about 450° of the 480° of heat required to double the volume of the air; the additional 30° are communicated by the fire beneath the cylinder.

The air has thus become expanded, it forces the piston upwards; it has done its work — valves open, and the imprisoned air, heated to 480°, passes from the cylinder

Digitized by Google

and again enters the regenerator, through which it must pass before leaving the machine. It has been said that the side of this instrument nearest the cylinder is kept hot; the other side is kept cool by the action upon it of the air entering in the opposite direction at each up-stroke of the pistons; consequently, as the air from the working cylinder passes out, the wires absorb the heat so effectually, that when it leaves the regenerator it has been robbed of it all, except about 30°.

The regenerator in the 60-horse engine measures 26 inches in height and width, internally. Each disc of wire composing it contains 676 superficial inches, and the net has 10 meshes to the inch. Each superficial inch, therefore, contains 100 meshes, which, multiplied by 676, gives 67,600 meshes in each disc; and, as 200 discs are employed, it follows that the regenerator contains 13,520,000 meshes; and consequently, as there are as many spaces between the discs as there are meshes, we find that the air within it is distributed in about 27,000,000 minute cells. Thence every particle of air, in passing through the regenerator, is brought into very close contact with a surface of metal which heats and cools it alternately. Upon this action of the regenerator, Ericsson's Calorific Engine depends. In its application on the large scale, contemplated in the great Atlantic steamer called "The Ericsson," the result was not satisfactory. We may, however, notwithstanding this result, safely predicate, from the investigation of Messrs. Thomson and Joule, that the expansion of air by heat will eventually, in some conditions, take the place of steam as a motive power.

AIR-GUN. This is a weapon in which the elastic force of air is made use of to project the ball. It is so arranged, that in a cavity in the stock of the gun, air can be, by means of a piston, powerfully condensed. Here is a reserved force, which, upon its being relieved from pressure, is at once exerted. When air has been condensed to about $\frac{1}{40}$th of its bulk, it exerts a force which is still very inferior to that of gunpowder. In many other respects the air-gun is but an imperfect weapon, consequently it is rarely employed.

AIR-PUMP. A machine by which the air can be exhausted from any vessel containing it. It is employed in scientific investigations for exhibiting many very interesting phenomena in connection with the pressure of air, and its presence or absence; and it is connected with, and forms an important part of, the improved modern steam-engine. Similar machines are also used for condensing atmospheric air; these have been employed on a large scale in some civil engineering purposes.

AIRO-HYDROGEN BLOWPIPE. A blowpipe in which air is used in the place of oxygen, to combine with and give intensity of heat to a hydrogen flame for the purposes of soldering. See AUTOGENOUS SOLDERING.

ALABASTER, *Gypsum*, *Plaster of Paris* (*Albâtre*, Fr.; *Alabaster*, Germ.), a sulphate of lime. (See ALABASTER, ORIENTAL.) When massive, it is called indifferently alabaster or gypsum; and when in distinct and separate crystals, it is termed selenite. Massive alabaster occurs in Britain in the new red or keuper marl: in Glamorganshire, on the Bristol Channel; in Leicestershire, at Syston; at Tutbury and near Burton-on-Trent, in Staffordshire; at Chellaston, in Derbyshire; near Droitwich it is associated in the marl with rock salt, in strata respectively 40 and 75 feet in thickness; and at Northwich and elsewhere the red marl is intersected with frequent veins of gypsum. At Tutbury it is quarried in the open air, and at Chellaston in caverns, where it is blasted by gunpowder: at both places it is burned in kilns, and otherwise prepared for the market. It lies in irregular beds in the marl, that at Chellaston being about 30 feet thick. There is, however, reason to suppose that it was not originally deposited along with the marl as sulphate of lime, but rather that calcareous strata, by the access of sulphuric acid and water, have been converted into sulphate of lime — a circumstance quite consistent with the bulging of the beds of marl with which the gypsum is associated, the lime, as a sulphate, occupying more space than it did in its original state as a carbonate. At Tutbury, and elsewhere, though it lies on a given general horizon, yet it can scarcely be said to be truly bedded, but ramifies among the beds and joints of the marl in numerous films, veins, and layers of fibrous gypsum.

A snow-white alabaster occurs at Volterra, in Tuscany, much used in works of art in Florence and Leghorn. In the Paris basin it occurs as a granular crystalline rock, in the Lower Tertiary rocks, known to geologists as the upper part of the Middle Eocene freshwater strata. It is associated with beds of white and green marls; but in the Thuringewald there is a great mass of sulphate of lime in the Permian strata. It has been sunk through to a depth of 70 feet, and is believed to be metamorphosed magnesian limestone or Zechstein. In the United States this calcareous salt occurs in numerous lenticular masses in marly and sand strata of that part of the Upper Silurian strata known as the Onondaga salt group. It is excavated for agricultural purposes. For mineralogical character, &c., see GYPSUM.— A. C. R.

Digitized by Google

The fineness of the grain of alabaster, the uniformity of its texture, the beauty of its polished surface, and its semi-transparency, are the qualities which render it valuable to the sculptor and to the manufacturer of ornamental toys.

The alabaster is worked with the same tools as marble; and as it is many degrees softer, it is so much the more easily cut; but it is more difficult to polish, from its little solidity. After it has been fashioned into the desired form, and smoothed down with pumice stone, it is polished with a pap-like mixture of chalk, soap, and milk; and, last of all, finished by friction with flannel. It is apt to acquire a yellowish tinge.

Besides the harder kinds, employed for the sculpture of large figures, there is a softer alabaster, pure white and semi-transparent, from which small ornamental objects are made, such as boxes, vases, lamps, stands of time-pieces, &c. This branch of business is much prosecuted in Florence, Leghorn, Milan, &c., and employs a great many turning-lathes. Of all the alabasters, the Florentine merits the preference, on account of its beauty and uniformity, so that it may be fashioned into figures of considerable size; for which purpose there are large workshops where it is cut with steel saws into blocks and masses of various shapes. Other sorts of gypsum, such as that of Salzburg and Austria, contain sand veins, and hard nodules, and require to be quarried by cleaving and blasting operations, which are apt to crack it and render it unfit for all delicate objects of sculpture. It is, besides, of a grey shade, and often stained with darker colours.

The alabaster best adapted for the fine arts is pretty white when newly broken, and becomes whiter on the surface by drying. It may be easily cut with the knife or chisel, and formed into many pleasing shapes by suitable steel tools. It is worked either by the hand alone, or with the aid of a turning-lathe. The turning tools should not be too thin or sharp-edged; but such as are employed for ivory and brass are most suitable for alabaster, and are chiefly used to shave and to scratch the surface. The objects which cannot be turned may be fashioned by the rasping tools, or with minute files, such as variegated foliage. Fine chisels and graving tools are also used for the better pieces of statuary.

For polishing such works, a peculiar process is required: pumice stone, in fine powder, serves to smooth down the surfaces very well, but it soils the whiteness of the alabaster. To take away the unevenness and roughness, dried shave-grass (*equisetum*) answers best. Frictions with this plant and water polish down the asperities left by the chisel: the fine streaks left by the grass may be removed by rubbing the pieces with slaked lime, finely pulverised, sifted, and made into a paste; or with putty-powder (oxide of tin) and water. The polish and satin-lustre of the surface are communicated by friction, first with soap water and lime, and finally with powdered and elutriated talc or French chalk.

Such articles as consist of several pieces are joined by a cement composed of quick-lime and white of egg, or of well-calcined and well-sifted Paris plaster, mixed with the least possible quantity of water.

Alabaster objects are liable to become yellow by keeping, and are especially injured by smoke, dust, &c. They may be in some measure restored by washing with soap and water, then with clear water, and again polished with shave-grass. Grease-spots may be removed either by rubbing with talc powder, or with oil of turpentine.

The surface of alabaster may be etched by covering over the parts that are not to be touched with a solution of wax in oil of turpentine, thickened with white lead, and immersing the articles in pure water after the varnish has set. The action of the water is continued from 20 to 50 hours, more or less, according to the depth to which the etching is to be cut. After removing the varnish with oil of turpentine, the etched places, which are necessarily deprived of their polish, should be rubbed with a brush dipped in finely-powdered gypsum, which gives a kind of opacity, contrasting well with the rest of the surface.

Alabaster may be stained either with metallic solutions, with spiritous tinctures of dyeing plants, or with coloured oils, in the same way as marbles.

The gypsum of our own country is found, in apparently inexhaustible quantities, in the Red Marl formation in the neighbourhood of Derby, and has been worked for many centuries. The great bulk of it is used for making plaster of Paris, and as a manure; and it is the basis of many kinds of cements, patented—as Keene's, Martin's, and others.

To get it for these purposes, it is worked by mining underground, and the stone is blasted by gunpowder; but this shakes it so much as to be unfit for working into ornaments, &c.; to procure blocks for which it is necessary to have an open quarry. By removing the superincumbent marl, and laying bare a large surface of the rock, the alabaster being very irregular in form, and jutting out in several parts, allows of its being *sawn* out in blocks of considerable size, and comparatively sound (as is illus

Digitized by Google

trated by the large tazza in the Museum of Practical Geology). This stone, when protected from the action of water, is extremely durable, as may be seen in churches all over the country, where monumental effigies, many centuries old, are now as perfect as the day they were made, excepting of course wilful injuries; but exposure to rain soon decomposes the stone, and it must be borne in mind that it is perfectly unsuited for garden vases or other out-door work in this country.

In working, it can be sawn up into slabs with toothed saws, and for working mouldings and sculptures, fine chisels, rasps, and files are the implements used; the polishing is performed by rubbing it with pieces of sandstone, of various degrees of fineness, and water until it is quite free from scratches, and then giving a gloss by means of polishing powder (oxide of tin) applied on a piece of cloth, and rubbed with a considerable degree of friction on the stone. This material gives employment in Derby to a good many hands in forming it into useful and ornamental articles, and is commonly called Derbyshire Spar; most of the articles are turned in the lathe, and it works something like very hard wood.

Another kind of gypsum also found in Derbyshire is the fibrous or silky kind; it occurs in thin beds, from one to six inches in depth, and is crystallised in long needle-like fibres; being easily worked, susceptible of a high polish, and quite lustrous, it is used for making necklaces, bracelets, brooches, and suchlike small articles.—S. H.

ALABASTER, ORIENTAL. Oriental alabaster is a form of stalagmitic or stalactitic carbonate of lime, an Egyptian variety of which is highly esteemed. It is also procured from the Pyrenees, from Chili, and from parts of the United States of America. Ancient quarries are still in existence in the province of Oran, in Algeria.

ALBANI STONE. (*Lapis albanus.*) The Peperino of modern geologists. A dark volcanic tufa found in Italy, much used at Rome before building with marble became common. The Italian name *peperino* is derived from *pepe*, pepper, which it somewhat resembles.

ALBATA PLATE, a name given to one of the varieties of white metal now so commonly employed. See COPPER, and ALLOYS.

ALBUM GRÆCUM. The white fæces of dogs. After the hair has been removed from skins, this is used to preserve the softness of them, and prepare them for the tan-pit. Fowls' dung is considered by practical tanners as superior to the dung of dogs, and this is obtained as largely as possible. These excreta may be said to be essentially phosphate of lime and mucus. We are informed that various artificial compounds which represent, chemically, the conditions of those natural ones, have been tried without producing the same good results. It is a reflection on our science, if this is really the case.

ALBUMEN. (*Album Ovi.*) Albumen is a substance which forms a constituent part of the animal fluids and solids, and which is also found in the vegetable kingdom. It exists nearly pure in the white of egg. Albumen consists of:—

Cabron	53·32
Hydrogen	7·29
Nitrogen	15·7
Sulphur	1·3
Oxygen	22·39

its Formula being $S^2 N^{37} C^{216} H^{169} O^{66}$. Albumen coagulates by heat, as is illustrated in the boiling of an egg. The salts of tin, bismuth, lead, silver, and mercury form with albumen white insoluble precipitates; therefore, in cases of poisoning by corrosive sublimate, nitrate of silver. or sugar of lead, the white of egg is the best antidote which can be administered. See ALBUMIN, Watts' "Dictionary of Chemistry."

Albumen is employed for clarifying vinous and syrupy liquids, and in calico-printing.

We imported the following quantities of albumen: in 1862, 1037 cwts., valued at 16,884*l.*; and in 1863, 948 cwts., valued at 12,166*l.*

ALBUMENISED PAPER. A paper prepared with the white of egg for photographic purposes. See PHOTOGRAPHY.

ALCARAZZAS. Porous earthenware vessels made in Spain from a sandy marl, and but slightly fired. They are used for cooling liquors. Those vessels are made in France under the name of *hygroceramen*; similar kinds of earthenware are also manufactured in Staffordshire and Derbyshire.

ALCOHOL. (*Alcool*, Fr.; *Alkohol*, or *Weingeist*, Germ.) The word *alcohol* is derived from the Hebrew word "*kohol*," כחל *to paint*. The oriental females were and are still in the habit of painting the eyebrows with various pigments; the one generally employed was a preparation of antimony, and to this the term was generally applied. It became, however, gradually extended to all substances used for the purpose, and ultimately to

Digitized by Google

strong spirits, which were employed, probably, as solvents for certain colouring principles. The term was subsequently exclusively used to designate ardent spirits, and ultimately the radical or principle upon which their strength depends.

As chemistry advanced, *alcohol* was found to be a member only of a class of bodies agreeing with it in general characters; and hence the term is now generic, and we speak of the various *alcohols*. Of these, common or vinous alcohol is the best known; and, in common life, by "alcoholic liquors," we invariably mean those containing the original or vinous alcohol.

When the characters of ordinary alcohol have been stated, allusion will be made to the class of bodies of which this is the type.

Fermented liquors were known in the most remote ages of antiquity. We read (Genesis ix.) that after the flood "Noah planted a vineyard, and he drank of the wine and was drunken." Homer, who certainly lived 900 years before the Christian era, also frequently mentions wine, and notices its effects on the body and mind (Odyssey IX. and XXI.); and Herodotus tells us that the Egyptians drank a liquor fermented from barley. The period when fermented liquors were submitted to distillation, so as to obtain "*ardent spirits*," is shrouded in much obscurity. Raymond Lully* was acquainted with "spirits of wine," which he called *aqua ardens*. The separation of absolute alcohol would appear to have been first effected about this period (1300), by Arnauld de Villeneuve, a celebrated physician residing in Montpellier (*Gerhardt*), and its analysis was first performed by Th. de Saussure.†

The preparation of alcohol may be divided into three stages:—

1. The production of a fermented vinous liquor — the Fermentation.
2. The preparation from this of an ardent spirit — the Distillation.
3. The separation from this ardent spirit of the last traces of water — the Rectification.

1. *Fermentation.* The term "fermentation" is now applied to those mysterious changes which vegetable (and animal) substances undergo when exposed, at a certain temperature, to contact with organic or even organised bodies in a state of change.

There are several bodies which suffer these metamorphoses, and under the influence of a great number of different exciting substances, which are termed the "ferments;" moreover, the resulting products depend greatly upon the temperature at which the change takes place.

The earliest known and best studied of these processes is the one commonly recognised as the *vinous* or *alcoholic fermentation.*

In this process solutions containing *sugar* — either the juice of the grape (see WINE) or an infusion of germinated barley, malt, (see BEER) — are mixed with a suitable quantity of a ferment; beer or wine yeast is usually employed (see YEAST), and the whole maintained at a temperature of between 70° and 80° F. (21° to 26° C.)

Other bodies in a state of putrefactive decomposition will effect the same result as the yeast, such as putrid blood, white of egg, &c.

The liquid swells up, a considerable quantity of froth collects on the surface, and an abundance of gas is disengaged, which is ordinary carbonic acid (CO^2). The composition of (pure) alcohol is expressed by the formula $C^4 H^6 O^2$, and it is produced in this process by the breaking up of an equivalent of *grape sugar*, $C^{24} H^{28} O^{28}$, into 4 equivalents of alcohol, 8 of carbonic acid, and 4 of water —

$$\begin{array}{rl} C^{24}\ H^{28}\ O^{28} & \\ \underline{C^{16}\ H^{24}\ O^{24}} & = 4\ (C^4\ H^6\ O^2) \\ C^8\ H^4\ O^{28} & \\ \underline{H^4\ O^4} & = 4\ HO \\ C^8 \quad O^{24} & = 8\ CO^2 \end{array}$$

It is invariably the *grape sugar* which undergoes this change; if the solution contains cane sugar, the cane sugar is first converted into grape sugar under the influence of the ferment. See SUGAR.

Much diversity of opinion exists with respect to the office which the ferment performs in this process, since it does not itself yield any of the products. See FERMENTATION.

The liquid obtained by the vinous fermentation has received different names, according to the source whence the saccharine solution was derived. When procured from the expressed juice of fruits — such as grapes, currants, gooseberries, &c. — the product is denominated *wine*; from a decoction of malt, *ale* or *beer*; from a mixture of honey and water, *mead*; from apples, *cider*; from the leaves and small branches of

* Thomson's History of Chemistry, i. 41. (1830)

† Annales de Chimie, xlii. 225.

Digitized by Google

the spruce-fir (*abies excelsa*, &c.), together with sugar or treacle, *spruce*; from rice, *rice beer* (which yields the spirit *arrack*); from cocoa-nut juice, *palm wine*.

It is an interesting fact that alcohol is produced in very considerable quantities (in the aggregate) during the raising of bread. The carbonic acid which is generated in the dough, and which during its expulsion raises the bread, is one of the products of the fermentation of the sugar in the flour, under the influence of the yeast added; and of course at the same time the complementary product, alcohol, is generated. As Messrs. Ronalds and Richardson remark*: "The enormous amount of bread that is baked in large towns — in London, for instance, 8·8 millions of cwts. yearly — would render the small amount of alcohol contained in it of sufficient importance to be worth collecting, provided this could be done sufficiently cheaply." In London it has been estimated that in this way about 300,000 gallons of spirit are annually lost; but the cost of collecting it would far exceed its value.

2. *Distillation*. By the process of *distillation*, *ardent spirits* are obtained, which have likewise received different names according to the sources whence the fermented liquor has been derived: viz. that produced by the distillation of wine being called *brandy*, and in France *cognac*, or *eau de vie*; that produced by the distillation of the fermented liquor from sugar and molasses, *rum*. There are several varieties of spirits made from the fermented liquor procured from the cereals (and especially barley), known according to their peculiar methods of manufacture, flavour, &c. — as *whisky*, *gin*, *Hollands* — the various *compounds* and *liqueurs*. In India, the spirit obtained from a fermented infusion of rice is called *arrack*.

3. *Rectification*; preparation of *absolute alcohol*. It is impossible by distillation alone to deprive spirit of the whole of the water and other impurities — to obtain, in fact, *pure* or *absolute* alcohol.

This is effected by mixing with the liquid obtained after one or two distillations, certain bodies which have a powerful attraction for water. The agents commonly employed for this purpose are quicklime, carbonate of potash, anhydrous sulphate of copper, or chloride of calcium. Perhaps the best adapted for the purpose, especially where large quantities are required, is quicklime; it is powdered, mixed in the retort with the spirit (previously twice distilled), and the neck of the retort being securely closed, the whole left for 24 hours, occasionally shaking; during this period the lime combines with the water, and then on carefully distilling, avoiding to continue the process until the last portions come over, an alcohol is obtained which is free from water. If not quite free, the same process may be again repeated.

In experiments on a small scale, an ordinary glass retort may be employed, heated by a water-bath, and fitted to a Liebig's condenser cooled by ice-water, which passes lastly into a glass receiver, similarly cooled.

Although alcohol of sufficient purity for most practical purposes can be readily obtained, yet the task of procuring absolute alcohol entirely free from a trace of water, is by no means an easy one.

Mr. Drinkwater † effected this by digesting ordinary alcohol of specific gravity ·850 at 60° F. for 24 hours with carbonate of potash previously exposed to a red heat; the alcohol was then carefully poured off and mixed in a retort with as much fresh-burnt quicklime as was sufficient to absorb the whole of the alcohol; after digesting for 48 hours, it was slowly distilled in a water-bath at a temperature of about 180° F. This alcohol was carefully redistilled, and its specific gravity at 60° F. found to be ·7947, which closely agrees with that given by Gay-Lussac as the specific gravity of absolute alcohol. He found, moreover, that recently ignited anhydrous sulphate of copper was a less efficient dehydrating agent than quicklime.

Graham recommends that the quantity of lime employed should never exceed three times the weight of the alcohol.

Chloride of calcium is not so well adapted for the purification of alcohol, since the alcohol forms a compound with this salt.

Many other processes have been suggested for depriving alcohol of its water.

A curious process was proposed many years ago by Soëmmering ‡, which is dependent upon the peculiar fact, that whilst water moistens animal tissues, alcohol does not, but tends rather to abstract water from them. If a mixture of alcohol and water be enclosed in an ox bladder, the water gradually traverses the membrane and evaporates, whilst the alcohol does not, and consequently by the loss of water the spirituous solution becomes concentrated.

This process, though an interesting illustration of exosmose, is not practically applicable to the production of anhydrous alcohol; it is, however, an economical method,

* Chemical Technology, by Dr. F. Knapp: edited by Messrs. Ronalds and Richardson. Vol. iii. 198.
† On the Preparation of Absolute Alcohol, and the Composition of Proof Spirit. See Memoirs of the Chemical Society, vol iii. p. 447.
‡ Soemmering. "Denkschriften d. K. Akad. d. Wissenchaften zu München," 1711 to 1824.

Digitized by Google

and well suited for obtaining alcohol for the preparation of varnishes. Smugglers, who bring spirits into France in bladders hid about their persons, have long known, that although the liquor decreased in bulk, yet it increased in strength; hence the people preferred the article conveyed clandestinely. Professor Graham has ingeniously proposed to concentrate alcohol as follows:—

"A large shallow basin is covered, to a small depth, with recently burnt quicklime, in coarse powder, and a smaller basin, containing three or four ounces of commercial alcohol, is made to rest upon the lime; the whole is placed under the low receiver of an air-pump, and the exhaustion continued till the alcohol evinces signs of ebullition. Of the mingled vapours of alcohol and water which now fill the receiver, the quicklime is capable of uniting with the aqueous only, which is therefore rapidly withdrawn, while the alcohol vapour is unaffected; and as water cannot remain in the alcohol as long as the superincumbent atmosphere is devoid of moisture, more aqueous vapour rises, which is likewise abstracted by the lime, and thus the process goes on till the whole of the water in the alcohol is removed. Several days are always required for this purpose."

Properties of Alcohol.—Absolute.

In the state of purity, alcohol is a colourless liquid, highly inflammable, burning with a pale blue flame, very volatile, and having a density of 0·792 at 15·5° C. (60° F.) (*Drinkwater.*) It boils at 78·4° C. (173° F.) It has never yet been solidified, and the density of its vapour is 1·6133.

Anhydrous alcohol is composed by weight of 52·18 carbon, 13·04 hydrogen, and 34·78 of oxygen. It has for its symbol $C^4 H^6 O^2 = C^4 H^5 O + HO$, or hydrated oxide of ethyle. It has a powerful affinity for water, removing the water from moist substances with which it is brought in contact. In consequence of this property, it attracts water from the air, and rapidly becomes weaker, unless kept in very well-stopped vessels. In virtue of its attraction for water, alcohol is very valuable for the preservation of organic substances, and especially of anatomical preparations, in consequence of its causing the coagulation of albuminous substances; and for the same reason it causes death when injected into the veins.

When mixed with water a considerable amount of heat is evolved, and a remarkable contraction of volume is observed. These effects being greatest with 54 per cent. of alcohol and 46 of water, and thence decreasing with a greater proportion of water. For alcohol which contains 90 per cent. of water, this condensation amounts to 1·94 per cent. of the volume; for 80 per cent., 2·87; for 70 per cent., 3·44; for 60 per cent., 3·73; for 40 per cent., 3·44; for 30 per cent., 2·72; for 20 per cent., 1·72; for 10 per cent., 0·72.

Alcohol is prepared absolute for certain purposes, but the mixtures of alcohol and water commonly met with in commerce are of an inferior strength. Those commonly sold are "Rectified Spirit," and "Proof Spirit."

"Proof Spirit" is defined by Act of Parliament, 58 Geo. III. c. 28, to be "such as shall, at the temperature of fifty-one degrees of Fahrenheit's thermometer, weigh exactly twelve-thirteenth parts of an equal measure of distilled water." And by very careful experiment, Mr. Drinkwater has determined that this proof spirit has the following composition:—

Alcohol and Water.		Specific Gravity at 60° F.	Bulk of the mixture of 100 measures of Alcohol, and 81·82 of Water.
By weight.	By measure.		
Alcohol Water.	Alcohol. Water.		
100 + 103·09			
49·100 + 50·76	100 + 81·82	·919	175·25

Spirit which is weaker is called "under proof;" and that stronger, "above proof." The origin of these terms is as follows:—Formerly a very rude mode of ascertaining the strength of spirits was practised, called the *proof*; the spirit was poured upon gunpowder and inflamed. If, at the end of the combustion, the gunpowder took fire, the spirit was said to be *above* or *over proof*. But if the spirit contained much water, the powder was rendered so moist that it did not take fire: in which case the spirit was said to be *under* or *below proof*.

Rectified spirit contains from 54 to 64 per cent. of absolute alcohol; and its specific gravity is fixed by the London and Edinburgh Colleges of Physicians at 0·838, whilst the Dublin College fixes it at 0·840.

In commerce the strength of mixtures of alcohol and water are stated at so many

Digitized by Google

degrees, according to Sykes's hydrometer, above or below proof. This instrument will be explained under the head of ALCOHOLOMETRY.

As will have been understood by the preceding remarks, the specific gravity or density of mixtures of alcohol and water rises with the diminution of the quantity of alcohol present; or, in other words, with the amount of water. And since the strength of spirits is determined by ascertaining their density, it becomes highly important to determine the precise ratio of this increase. This increase in density with the amount of water, or diminution with the quantity of alcohol, is, however, not directly proportional, in consequence of the contraction of volume which mixtures of alcohol and water suffer.

It therefore became necessary to determine the density of mixtures of known composition, prepared artificially. This has been done recently with great care by Mr. Drinkwater*; and the following Table by him is recommended as one of the most accurate.

Table of the Quantity of Alcohol, BY WEIGHT, *contained in Mixtures of Alcohol and Water of the following Specific Gravities:—*

Specific Gravity at 60° F.	Alcohol per cent. by weight.	Specific Gravity at 60° F.	Alcohol per cent. by weight.	Specific Gravity at 60° F.	Alcohol per cent. by weight.	Specific Gravity at 60° F.	Alcohol per cent. by weight.	Specific Gravity at 60° F.	Alcohol per cent. by weight.
1·0000	0·00	·9967	1·78	·9934	3·67	·9901	5·70	·9869	7·85
·9999	0·05	·9966	1·83	·9933	3·73	·9900	5·77	·9868	7·92
·9998	0·11	·9965	1·89	·9932	3·78	·9899	5·83	·9867	7·99
·9997	0·16	·9964	1·94	·9931	3·84	·9898	5·89	·9866	8·06
·9996	0·21	·9963	1·99	·9930	3·90	·9897	5·96	·9865	8·13
·9995	0·26	·9962	2·05	·9929	3·96	·9896	6·02	·9864	8·20
·9994	0·32	·9961	2·11	·9928	4 02	·9895	6·09	·9863	8·27
·9993	0·37	·9960	2·17	·9927	4·08	·9894	6·15	·9862	8·34
·9992	0·42	·9959	2·22	·9926	4·14	·9893	6·22	·9861	8·41
·9991	0·47	·9958	2 28	·9925	4·20	·9892	6·29	·9860	8·48
·9990	0·53	·9957	2·34	·9924	4·27	·9891	6·35	·9859	8·55
·9989	0·58	·9956	2·39	·9923	4·33	·9890	6·42	·9858	8·62
·9988	0·64	·9955	2·45	·9922	4·39	·9889	6·49	·9857	8·70
·9987	0·69	·9954	2·51	·9921	4·45	·9888	6·55	·9856	8·77
·9986	0·74	·9953	2·57	·9920	4·51	·9887	6·62	·9855	8·84
·9985	0·80	·9952	2 62	·9919	4·57	·9886	6·69	·9854	8·91
·9984	0·85	·9951	2·68	·9918	4·64	·9885	6·75	·9853	8·98
·9983	0·91	·9950	2·74	·9917	4·70	·9884	6·82	·9852	9·05
·9982	0·96	·9949	2·79	·9916	4·76	·9883	6·89	·9851	9·12
·9981	1·02	·9948	2·85	·9915	4·82	·9882	6·95	·9850	9·20
·9980	1·07	·9947	2·91	·9914	4·88	·9881	7·02	·9849	9 27
·9979	1·12	·9946	2·97	·9913	4·94	·9880	7·09	·9848	9·34
·9978	1·18	·9945	3·02	·9912	5·01	·9879	7·16	·9847	9·41
·9977	1·23	·9944	3·08	·9911	5·07	·9878	7·23	·9846	9·49
·9976	1·29	·9943	3·14	·9910	5·13	·9877	7·30	·9845	9·56
·9975	1·34	·9942	3·20	·9909	5.20	·9876	7·37	·9844	9·63
·9974	1·40	·9941	3·26	·9908	5·26	·9875	7·43	·9843	9·70
·9973	1·45	·9940	3·32	·9907	5·32	·9874	7·50	·9842	9·78
·9972	1·51	·9939	3·37	·9906	5·39	·9873	7·57	·9841	9·85
·9971	1·56	·9938	3·43	·9905	5·45	·9872	7·64	·9840	9·92
·9970	1·61	·9937	3·49	·9904	5·51	·9871	7·71	·9839	9·99
·9969	1·67	·9936	3·55	·9903	5·58	·9870	7·78	·9838	10·07
·9968	1·73	·9935	3·61	·9902	5·64				

The preceding Table, though very accurate so far as it goes, is not sufficiently extensive for practical purposes, only going, in fact, from 6 to 10 per cent. of alcohol; the Table of Tralle's (page 49) extends to 50 per cent. of absolute alcohol.

Moreover, Drinkwater's Table has the (practical) disadvantage (though scientifically more correct and useful) of stating the per-centage *by weight*; whereas in Tralle's Table it is given by *volume*. And since liquors are vended by measure, and not by weight, the centesimal amount by volume is usually preferred. But as the bulk of

* Memoirs of the Chemical Society, vol. iii. p. 454.

Digitized by Google

liquids generally, and particularly that of alcohol, is increased by heat, it is necessary that the statement of the density in a certain volume should have reference to some normal temperature. In the construction of Tralle's Table the temperature of the liquids was 60° F.; and of course, in using it, it is necessary that the density should be observed at that temperature.

In order to convert the statement of the composition *by volume* into the content by weight, it is only necessary to multiply the per-centage of alcohol by volume by the specific gravity of absolute alcohol, and then divide by the specific gravity of the liquid.

It has been thought desirable to retain the following remarks by Dr. Ure, and to give Mr. Gilpin's tables in addition to the others.

The importance of extreme accuracy in determining the density of alcoholic mixtures in the United Kingdom, on account of the great revenue derived from them to the State, and their consequent high price in commerce, induced the Lords of the Treasury a few years ago to request the Royal Society to examine the construction and mode of applying the instrument now in use for ascertaining and charging the duty on spirits. This instrument, which is known and described in the law as Sikes's hydrometer, possesses, in many respects, decided advantages over those formerly in use. The committee of the Royal Society state, that a definite mixture of alcohol and water is as invariable in its value as absolute alcohol can be; and can be more readily, and with equal accuracy, indentified by that only quality or condition to which recourse can be had in practice, namely, specific gravity. The committee further proposed, that the standard spirit be that which, consisting of alcohol and water alone, shall have a specific gravity of 0·92 at the temperature of 62° F., water being unity at the same temperature; or, in other words, that it shall at 62° weigh $\frac{92}{100}$ths or $\frac{12}{13}$ths of an equal bulk of water at the same temperature.

This standard is rather stronger than the old proof, which was $\frac{12}{13}$ths or 0·923; or in the proportion of nearly 1·1 gallon of the present proof spirit per cent. The proposed standard will contain nearly one-half by weight of absolute alcohol. The hydrometer ought to be so graduated as to give the indication of strength; not upon an arbitrary scale, but in terms of specific gravity at the temperature of 62°.

The committee recommend the construction of an equation table, which shall indicate the same strength of spirit at every temperature. Thus in standard spirit at 62° the hydrometer would indicate 920, which in this table would give proof spirit. If that same spirit were cooled to 40°, the hydrometer would indicate some higher number; but which, being combined in the table with the temperature as indicated by the thermometer, should still give proof or standard spirit as the result.

It is considered advisable, in this and the other tables, not to express the quality of the spirit by any number over or under proof, but to indicate at once the number of gallons of standard spirit contained in, or equivalent to, 100 gallons of the spirit under examination. Thus, instead of saying 23 over proof, it is proposed to insert 123; and in place of 35·4 under proof, to insert its difference to 100, or 64·6.

It has been considered expedient to recommend a second table to be constructed, so as to show the bulk of spirit of any strength at any temperature, relative to a standard bulk of 100 gallons at 62°. In this table, a spirit which had diminished in volume, at any given temperature, 0·7 per cent., for example, would be expressed by 99·3; and a spirit which had increased at any given temperature 0·7 per cent., by 100·7.

When a sample of spirit, therefore, has been examined by the hydrometer and thermometer, these tables will give first the proportion of standard spirit at the observed temperature, and next the change of bulk of such spirit from what it would be at the standard temperature. Thus, at the temperature of 51°, and with an indication (specific gravity) of 8240, 100 gallons of the spirit under examintion would be shown by the first table to be equal to 164·8 gallons of standard spirit of that temperature; and by the second table it would appear that 99·3 gallons of the same spirit would become 100 at 62°, or in reality contain the 164·8 gallons of spirit in that state only in which it is to be taxed.

But as it is considered that neither of these tables can alone be used for charging the duty (for neither can express the actual quantity of spirit of a specific gravity of 0·92 at 62° in 100 gallons of stronger or weaker spirit at temperatures above or below 62°), it is considered essential to have a third table, combining the two former, and expressing this relation directly, so that upon mere inspection it shall indicate the proportion of standard spirit in 100 gallons of that under examination in its then present state. In this table the quantities should be set down in the actual number of gallons of standard spirit at 62°, equivalent to 100 of the spirit under examination; and the column of quantities may be expressed by the term *value*, as it in reality expresses the proportion of the only valuable substance present.

Digitized by Google

The following specimen Table has been given by the committee : —

Temperature 45°.			Temperature 75°.		
Indication.*	Strength.	Value.	Indication.	Strength.	Value.
9074	114·5		8941	114·5	
7	114·3		4	114·3	
9	114·2		5	114·2	
81	114·0		8	114·0	
3	113·9		9	113·9	
5	113·7		52	113·7	
6	113·6		3	113·6	
9	113·4		6	113·4	
90	113·3		7	113·3	
3	113·1		9	113·1	

The mixture of alcohol and water, taken as spirit in Mr. Gilpin's tables, is that of which the specific gravity is 0·825 at 60° F., water being unity at the same temperature. The specific gravity of water at 60° being 1000, at 62° it is 99,981. Hence, in order to compare the specific gravities given by Mr. Gilpin with those which would result when the specific gravity of water at 62° is taken at unity, all the former numbers must be divided by 99,981.

Table of the Specific Gravities of different Mixtures, BY WEIGHT, *of Alcohol and Water, at different Temperatures; constructed by Mr. Gilpin, for the use of the British Revenue on Spirits.*

Temperature, Fahr.	Pure Alcohol.	100 Alcohol 5 Water.	100 Alcohol 10 Water.	100 Alcohol 15 Water.	100 Alcohol 20 Water.	100 Alcohol 25 Water.	100 Alcohol 30 Water.	100 Alcohol 35 Water.	100 Alcohol 40 Water.	100 Alcohol 45 Water.	100 Alcohol 50 Water.
Deg.											
30	0·83996	0·84995	0·85957	0·86825	0·87585	0·88282	0·88921	0·89511	0·90054	0·90558	0·91023
35	·83672	·84769	·85729	·86587	·87357	·88059	·88701	·89294	·89839	·90345	·90811
40	·93445	·84539	·85507	·86361	·87184	·87838	·88481	·89073	·89617	·90127	·90596
45	83214	·84310	·85277	·86131	·86905	·87613	·88255	·88849	·89396	·89909	·90380
50	·82977	·84076	·85042	·85902	·86676	·87984	·88030	·88626	·89174	·89684	·90160
55	·82736	·83834	·84802	·85664	·86441	·87150	·87796	·88393	·88945	·89458	·89933
60	·82500	·83599	·84568	·85430	·86208	·86918	·87569	·88169	·88720	·89232	·89707
65	·82262	·83362	·84334	·85193	·85976	·86686	·87337	·87938	·88490	·89006	·89479
70	·82023	·83124	·84092	·84951	·85736	·86451	·87105	·87705	·88254	·88773	·89252
75	·81780	·82878	·83851	·84710	·85496	·86212	·86864	·87466	·88018	·88538	89018
80	·81530	·82631	·83603	·84467	·85244	·85966	·86622	·87228	·87776	·88301	·8878l
85	·81291	·82396	·83371	·84243	·85036	·85757	·86411	·87021	·87590	·88120	·886 9
90	·81044	·82150	·83126	·84001	·84797	·85518	·86172	·86787	·87360	·87889	·88376
95	·80794	·81900	·82877	·83753	·84550	·85272	·85928	·86542	·87114	·87654	·8814l
100	·80548	·81657	·82639	·83513	·84038	·85031	·85688	·86302	·86879	·87421	·87915

Temperature, Fahr.	100 Alcohol 55 Water.	100 Alcohol 60 Water.	100 Alcohol 65 Water.	100 Alcohol 70 Water.	100 Alcohol 75 Water.	100 Alcohol 80 Water.	100 Alcohol 85 Water.	100 Alcohol 90 Water.	100 Alcohol 95 Water.	100 Alcohol 100 Water.
Deg.										
30	0·91449	0·91847	0·92217	0·92563	0·92889	0·93191	0·93474	0·93741	0·93991	0·94222
35	·91241	·91640	·92009	·92355	·92680	·92986	·93274	·93541	·93790	·94025
40	·91026	·91428	·91799	·92151	·92476	·92783	·93072	·93341	·93592	·93827
45	·90812	·91211	·91884	·91937	·92264	·92570	·92859	·93131	·93382	·93621
50	·90596	·90997	·91370	·91723	·92051	·92358	·92647	·92919	·93177	·93419
55	·90367	·90768	·91144	·91502	·91837	·92145	·92436	·92707	·92963	·93208
60	·90144	·90549	·90927	·91287	·91622	·91933	·92225	·92499	·92758	·93002
65	·89920	·90328	·90707	·91066	·91400	·91715	·92010	·92283	·92546	·92794
70	·89695	·90104	·90484	·90817	·91181	·91493	·91793	·92069	·92333	·92580
75	·89464	·89872	·90252	·90617	·90952	·91270	·91569	·91819	·92111	·92364
80	·89225	·89639	·90021	·90385	·90723	91046	·91340	·91622	·91891	·92142
85	·89043	·89460	·89843	·90209	·90558	·90882	·91186	·91465	·91729	·91969
90	·88817	·89230	·89617	·89989	·90342	·90688	·90977	·91248	·91511	·91751
95	·88588	·89003	·89390	·89773	·90119	·90443	·90747	·91029	·91290	·91531
100	·883571	·88769	·89158	·89536	·89889	·90215	·90522	·90805	·91066	·91310

* By specific gravity.

Digitized by Google

Table of the Specific Gravities of different Mixtures, &c. (continued.)

Temperature, Fahr.	95 Alcohol 100 Water.	90 Alcohol 100 Water.	85 Alcohol 100 Water.	80 Alcohol 100 Water.	75 Alcohol 100 Water.	70 Alcohol 100 Water.	65 Alcohol 100 Water.	60 Alcohol 100 Water.	55 Alcohol 100 Water.	50 Alcohol 100 Water.
Deg.										
30	0·94447	0·94675	0·94920	0·95173	0·95429	0·95681	0·95944	0·96209	0·96470	0·96719
35	·94249	·94484	·94734	·94988	·95246	·95502	·95772	·96048	·96315	·96579
40	·94058	·94295	·94547	·94802	·95060	·95328	·95602	·95879	·96159	·96434
45	·93860	·94096	·94319	·94605	·94871	·95143	·95423	·95703	·95993	·96280
50	·93658	·93897	·94149	·94414	·94683	·94958	·95243	·95534	·95831	·96126
55	·93452	·93696	·93948	·94213	·94486	·94767	·95057	·95357	·95662	·95966
60	·93247	·93493	·93749	·94018	·94296	·94579	·94876	·95181	·95493	·95804
65	·93040	·93285	·93516	·93822	·94099	·94388	·94689	·95000	·95318	·95635
70	·92828	·93076	·93337	·93616	·93898	·94193	·94500	·94813	·95139	·95469
75	·92613	·92865	·93132	·93413	·93695	·94301	·94628	·94957	·95292	
80	·92393	·92646	·92917	·93201	·93488	·93785	·94102	·94431	·94768	·95111

Temperature, Fahr.	45 Alcohol 100 Water.	40 Alcohol 100 Water.	35 Alcohol 100 Water.	30 Alcohol 100 Water.	25 Alcohol 100 Water.	20 Alcohol 100 Water.	15 Alcohol 100 Water.	10 Alcohol 100 Water.	5 Alcohol 100 Water.
Deg.									
30	0·96967	0·97200	0·97418	0·97635	0·97860	0·98108	0·98412	0·98804	0·99334
35	·96840	·97086	·97319	·97556	·97801	·98076	·98397	·98804	·99344
40	·96706	·96967	·97220	·97472	·97737	·98033	·98373	·98795	·99345
45	·96563	·96840	·97110	·97384	·97666	·97980	·98338	·98774	·99338
50	·96420	·96708	·96995	·97284	·97589	·97920	·98293	·98745	·99316
55	·96272	·96575	·96877	·97181	·97500	·97847	·98239	·98702	·99284
60	·96122	·96437	·96752	·97074	·97410	·97771	·98176	·98654	·99244
65	·95962	·96288	·96620	·96979	·97309	·97688	·98106	·98494	·99194
70	·95802	·96143	·96484	·96836	·97203	·97596	·98028	·98527	·99134
75	·95638	·95987	·96344	·96708	·97086	·97495	·97943	·98454	·99066
80	·95467	·95826	·96192	·96568	·96963	·97385	·97845	·98367	·98991

Experiments were made, by direction of the committee, to verify Gilpin's tables, which showed that the error introduced in ascertaining the strength of spirits by tables founded on Gilpin's numbers must be quite insensible in the practice of the Revenue. The discrepancies thus detected, on a mixture of a given strength, did not amount in any one instance to unity in the fourth place of decimals. From a careful inspection of such documents the committee are of opinion that Gilpin's tables possess a degree of accuracy far surpassing what could be expected, and sufficiently perfect for all practical or scientific purposes.

The following Table is given by Mr. Lubbock, for converting the *apparent* specific gravity, or *indication*, into true specific gravity :—

Indication.	— Temperature.								+				Indication.
	30°	32°	37°	42°	47°	52°	57°	62°	67°	72°	77°	80°	
·82	·00083	·00078	·00065	·00052	·00039	·00026	·00012		·00011	·00024	·00035	·00042	·82
·83	·00084	·00079	·00066	·00052	·00039	·00026	·00012		·00012	·00024	·00036	·00042	·83
·84	·00085	·00080	·00066	·00053	·00039	·00026	·00013		·00012	·00024	·00036	·00043	·84
·85	·00086	·00081	·00067	·00054	·00040	·00026	·00013		·00012	·00025	·00037	·00043	·85
·86	·00087	·00082	·00068	·00054	·00040	·00027	·00013		·00012	·00025	·00037	·00044	·86
·87	·00088	·00083	·00069	·00055	·00041	·00027	·00013		·00012	·00025	·00037	·00044	·87
·88	·00089	·00084	·00070	·00055	·00041	·00027	·00013		·00012	·00026	·00038	·00045	·88
·89	·00090	·00085	·00070	·00056	·00042	·00028	·00013		·00012	·00026	·00038	·00045	·89
·90	·00091	·00085	·00071	·00056	·00042	·00028	·00014		·00013	·00026	·00039	·00046	·90
·91	·00092	·00086	·00072	·00057	·00043	·00028	·00014		·00013	·00026	·00039	·00046	·91
·92	·00093	·00087	·00073	·00058	·00043	·00029	·00014		·00013	·00027	·00040	·00047	·92
·93	·00094	·00088	·00073	·00059	·00044	·00029	·00014		·00013	·00027	·00040	·00047	·93
·94	·00095	·00089	·00074	·00059	·00044	·00029	·00014		·00013	·00027	·00040	·00048	·94
·95	·00096	·00090	·00075	·00060	·00045	·00029	·00014		·00013	·00028	·00041	·00048	·95
·96	·00097	·00091	·00076	·00060	·00045	·00030	·00014		·00013	·00028	·00041	·00049	·96
·97	·00098	·00092	·00077	·00061	·00046	·00030	·00015		·00014	·00028	·00042	·00049	·97
·98	·00099	·00093	·00077	·00062	·00046	·00030	·00015		·00014	·00028	·00042	·00050	·98
·99	·00100	·00094	·00078	·00062	·00047	·00031	·00015		·00014	·00029	·00043	·00050	·99
·100	·00101	·00095	·00079	·00063	·00047	·00031	·00015						·100

Digitized by Google

Tralle's Table of the Composition BY VOLUME *of Mixtures of Alcohol and Water of different Densities.*

Per-centage of Alcohol by volume.	Specific Gravity at 60° F.	Differ-ence of the spe-cific gra-vities.	Per-centage of Alcohol by volume.	Specific Gravity at 60° F.	Differ-ence of the spe-cific gra-vities.	Per-centage of Alcohol by volume.	Specific Gravity at 60° F.	Differ-ence of the spe-cific gra-vities.
0	0·9991		34	0·9596	13	68	0·8941	24
1	0·9976	15	35	0·9583	13	69	0·8917	24
2	0·9961	15	36	0·9570	13	70	0·8892	25
3	0·9947	14	37	0·9556	14	71	0·8867	25
4	0·9933	14	38	0·9541	15	72	0·8842	25
5	0·9919	14	39	0·9526	15	73	0·8817	25
6	0·9906	13	40	0·9510	16	74	0·8791	26
7	0·9893	13	41	0·9494	16	75	0·8765	26
8	0·9881	12	42	0·9478	16	76	0·8739	26
9	0·9869	12	43	0·9461	17	77	0·8712	27
10	0·9857	12	44	0·9444	17	78	0·8685	27
11	0·9845	12	45	0·9427	17	79	0·8658	27
12	0·9834	11	46	0·9409	18	80	0·8631	27
13	0·9823	11	47	0·9391	18	81	0·8603	28
14	0·9812	11	48	0·9373	18	82	0·8575	28
15	0·9802	10	49	0·9354	19	83	0·8547	28
16	0·9791	11	50	0·9335	19	84	0·8518	29
17	0·9781	10	51	0·9315	20	85	0·8488	30
18	0·9771	10	52	0·9295	20	86	0·8458	30
19	0·9761	10	53	0·9275	20	87	0·8428	30
20	0·9751	10	54	0·9254	21	88	0·8397	31
21	0·9741	10	55	0·9234	20	89	0·8365	32
22	0·9731	10	56	0·9213	21	90	0·8332	33
23	0·9720	11	57	0·9192	21	91	0·8299	33
24	0·9710	10	58	0·9170	22	92	0·8265	34
25	0·9700	10	59	0·9148	22	93	0·8230	35
26	0·9689	11	60	0·9126	22	94	0·8194	36
27	0·9679	10	61	0·9104	22	95	0·8157	37
28	0·9668	11	62	0·9082	22	96	0·8118	39
29	0·9657	11	63	0·9059	23	97	0·8077	41
30	0·9646	11	64	0·9036	23	98	0·8034	43
31	0·9634	12	65	0·9013	23	99	0·7988	46
32	0·9622	12	66	0·8989	24	100	0·7939	49
33	0·9609	13	67	0·8965	24			

In order, however, to employ this Table for ascertaining the strength of mixtures of alcohol and water of different densities (which is the practical use of such Tables), it is absolutely necessary that the determination of the density should be performed at an invariable temperature,—viz. 60° F. The methods of determining the density will be hereafter described; but it is obvious that practically the experiment cannot be conveniently made at any fixed temperature, but must be performed at that of the atmosphere.

M. Gay-Lussac has constructed a most valuable Table, of which the following is an abstract, which is supplied with his "Alcoomètre." (See ALCOHOLOMETRY.) It enables one to ascertain, from the observed density at any given temperature, the density at the normal temperature 15·5° C. (60° F.), and hence the strength; or, *vice versâ*, from the observed density at 60° F. to find the density at any other temperature.

The first vertical column of this Table contains the temperatures, from 0° to 30° C.; and the first horizontal line the indications of the alcoomètre. In the same Table he has most ingeniously inserted a correction of the volume of the spirits when the temperature differs from 15·5° C. (60° F.). All the numbers printed in small characters, under each *real strength*, i.e. per-centage of absolute alcohol, indicate the volume which 1000 *litres* (*the litre being* 1·760773 *pints*) of a spirituous liquor would have when measured at the temperature at which its apparent strength is given.

Digitized by Google

Alcoömetrical Table of real Strength, by M. Gay-Lussac.

Temp. C.	31c	32c	33c	34c	35c	36c	37c	38c	39c	40c
Deg.										
10	33·0 1·02	34 1·02	35 1003	36 1003	37 1003	38 1003	39 1003	40 1003	41 1003	42 1003
11	32·6 1002	33·6 1002	34·6 1002	35·6 1002	36·6 1002	37·6 1002	38·6 1002	39·6 1002	40·6 1·03	41·6 1003
12	32·2 1001	33·2 1001	34·2 1002	35·2 1002	36·2 1002	37·2 1002	38·2 1002	39·2 1002	40·2 1002	41·2 1002
13	31·8 1001	32 8 1001	33·8 1001	34·8 1001	35·8 1001	36·8 1001	37·8 1001	38·8 1001	39·8 1001	40 8 1001
14	31·4 1001	32·4 1001	33·4 1001	34·4 1001	35·4 1001	36·4 1001	37·4 1001	88·4 1001	39·4 1001	40·4 1001
15	31 1000	32 1000	33 1000	34 1000	35 1000	36 1000	37 1000	38 1000	39 1000	40 1000
16	30·6 1000	31·6 1000	32·5 999	33·5 999	34·5 999	35·5 999	36·5 999	37·5 999	38·5 999	39·5 999
17	30·2 999	31·2 999	32·1 999	33·1 999	34·1 999	35·1 999	36·1 999	37·1 999	38·1 999	39·1 999
18	29·8 999	30·8 999	31·7 998	32·7 998	33·7 998	34·7 998	35·7 998	36·7 998	37·7 998	38·7 998
19	29·4 998	30·4 998	31·3 998	32·3 998	33·3 998	34·3 998	35·3 998	36·3 998	37·3 997	38·3 997
20	29 998	30 998	30·9 997	31·9 997	32·9 997	33·9 997	34·9 997	35·9 997	36·9 997	37·9 997
21	28·6 997	29·6 997	30·5 997	31·5 997	32·5 997	33·5 997	34·5 997	35·5 996	36·5 996	37·5 996
22	28·2 997	29·2 997	30·1 996	31·1 996	32·1 996	33·1 996	34·1 996	35·1 996	36·1 996	37·1 9·6
23	27·8 996	28·8 996	29·7 996	30·7 996	31·7 996	32·7 996	33·7 996	34·7 995	35·7 995	36·7 995
24	27·4 996	28·4 996	29·3 995	30·3 995	31·3 995	32·3 995	33·3 995	34·3 995	35·3 995	36·3 994
25	27 995	28 995	28·9 995	29·9 995	30·9 995	31·9 994	32·9 994	33·9 994	34·9 994	35·9 994

Temp. C.	41c	42c	43c	44c	45c	46c	47c	48c	49c	50c
Deg.										
10	43 1003	44 1004	45 1004	46 1004	46·9 1004	47·9 1·04	48·9 1004	49·9 1004	50·9 1004	51·8 1004
11	42·6 1003	43·6 1003	44·6 1003	45·6 1003	46·6 1003	47·6 1003	48·6 1003	49·5 1003	50·5 1003	51·5 1003
12	42·2 1002	43·2 1002	44·2 1002	45·2 1002	46·2 1002	47·2 1002	48·2 1002	49·2 1002	50·2 1002	51·1 1002
13	41·8 1001	42·8 1001	43·8 1001	44·8 1002	45·8 1002	46·8 1002	47·8 1002	48·8 1002	49·8 1002	50·8 1002
14	41·4 1001	42·4 1001	43·4 1001	44·4 1001	45·4 1001	46·4 1000	47·4 1001	48·4 1001	49·4 1001	50·4 1000
15	41 1000	42 1000	43 1000	44 1000	45 1000	46 1000	47 1000	48 1000	49 1000	50 1000
16	40 6 999	41·6 999	42·6 999	43·6 999	44·6 999	45·6 999	46·6 999	47·6 999	48·6 999	49·6 999
17	40·2 999	41·2 999	42·2 999	43·2 998	44·2 998	45·2 998	46·2 998	47·2 998	48·2 998	49·2 998
18	39·8 998	48·8 998	41·8 998	42·8 998	43·8 998	44·9 998	45·9 998	46·9 998	47·9 998	48·9 998
19	39·4 997	40·4 997	41·4 997	42·5 997	43·5 997	44·5 997	45·5 997	46·5 997	47·5 997	48·5 997
20	39 997	40 997	41 997	42·1 997	43·1 996	44·1 996	45·1 996	46·1 996	47·2 996	48·2 996
21	38·6 996	39·6 996	40 6 996	41·7 996	42·7 996	43·7 996	44·8 996	45·8 996	46·8 995	47·8 995

Digitized by Google

Alcoölmetrical Table of real Strength, by M. Gay-Lussac (continued).

Temp. C.	41c	42c	43c	44c	45c	46c	47c	48c	49c	50c
Deg. 22	38·2 996	39·2 995	40·2 995	41·3 995	42·3 995	43·3 995	44·3 995	45·3 995	46·4 995	47·4 995
23	37·8 995	38·8 995	39·8 995	40·9 994	41·9 994	42·9 994	43·9 994	44·9 994	46 994	47 994
24	37·4 994	38·4 994	39·4 994	40·5 994	41·5 994	42·5 994	43·6 994	44·6 994	45·6 993	46·6 993
25	37 994	38 994	39 993	40·1 993	42·1 993	42·2 993	43·2 993	44·2 993	45.2 993	46·3 993

Temp. C.	51c	52c	53c	54c	55c	56c	57c	58c	59c	60c
Deg. 10	52·9 1004	53·8 1004	54·8 1004	55·8 1004	56·8 1004	57·8 1004	58·8 1004	59·7 1004	60·7 1004	61·7 1004
11	52·5 1003	53·5 1003	54·4 1003	55·4 1003	56·4 1003	57·4 1003	58·4 1003	59·4 1003	60·4 1003	61·4 1003
12	52·1 1002	53·1 1002	54·1 1002	55 1002	56 1002	57 1002	58 1002	59 1002	60 1002	61 1002
13	51·8 1002	52·7 1002	53·7 1002	54·7 1002	55·7 1002	56·7 1002	57·7 1002	58·7 1002	59·7 1002	60·7 1002
14	51·4 1001	52·3 1001	53·3 1001	54·3 1001	55·3 1001	56·3 1001	57·3 1001	58 3 1001	59·3 1001	60·3 1001
15	51 1000	52 1000	53 1000	54 1000	55 1000	56 1000	57 1000	58 1000	59 1000	60 1000
16	50·6 999	51·6 999	52·6 999	53·6 999	54·6 999	55·6 999	56·6 999	57·6 999	58 6 999	59·6 999
17	50·3 998	51·3 998	52 3 998	53·3 998	54 3 998	55·3 998	56·3 998	57·3 998	58·3 998	59·3 998
18	49·9 998	50·9 998	51·9 998	52·9 998	53·9 998	54·9 998	55·9 998	56·9 997	57·9 997	58·9 997
19	49·5 997	50·6 997	51·6 997	52·6 997	53·6 997	54·6 997	55·6 997	56·6 997	57·6 997	58·6 997
20	49·2 996	50·2 996	51·2 996	52·2 996	53·2 996	54·2 996	55·2 996	56·2 996	57·2 996	58·2 996
21	48·8 995	49·8 995	50·8 995	51 8 995	52·9 995	53·9 995	54·9 995	55·9 995	56·9 995	57·9 995
22	48·4 995	49·4 995	50·4 995	51·4 994	52·5 994	53·5 994	54·5 994	55·5 994	56·5 994	57·5 994
23	48 994	49·1 994	50·1 994	51·1 994	52·1 994	53·1 994	54·1 994	55·1 993	56·1 993	57·1 993
24	47·6 993	48·7 993	49·7 993	50·7 993	51·8 993	52·8 993	53·8 993	54·8 993	55·8 993	56·8 992
25	47·3 993	48·3 993	49 3 993	50·3 992	51·4 992	52·4 992	53·4 992	54·4 992	55·5 992	56·6 992

Temp. C.	61c	62c	63c	64c	65c	66c	67c	68c	69c	70c
Deg. 10	62·7 1004	63·7 1004	64·7 1004	65·7 1004	66·7 1004	67.6 1004	68·6 1004	69·6 1004	70·6 1004	71·6 1004
11	62·4 1003	63·4 1003	64·4 1003	65·4 1003	66·4 1003	67·3 1003	68·3 1003	69·3 1004	70·3 1004	71·3 1004
12	62 1002	63 1002	64 1002	65 1002	66 1002	67 1002	68 1003	69 1003	70 1003	71 1003
13	61·7 1002	62·7 1002	63·7 1002	64·7 1002	65·7 1002	66·7 1002	67·7 1002	68·7 1002	69·6 1002	70·6 1002
14	61·3 1001	62·3 1001	63·3 1001	64·3 1001	65·3 1001	66·3 1001	67·3 1001	68·3 1001	69·3 1001	70·3 1001
15	61 1000	62 1000	63 1000	64 1000	65 1000	66 1000	67 1000	68 1000	69 1000	70 1000

Digitized by Google

Alcoömetrical Table of real Strength, by M. Gay-Lussac (continued).

Temp. C.	61c	62c	63c	64c	65c	66c	67c	68c	69c	70c
Deg. 16	60·6 999	61·7 999	62·7 999	63·7 999	64·7 999	65·7 999	66·7 999	67·7 999	68·7 999	69·7 999
17	60·3 998	61·3 998	62·3 998	63·3 998	64·3 998	65·3 998	66·3 998	67·3 998	68·3 998	69·3 998
18	59·9 997	61 997	62 997	63 997	64 997	65 997	66 997	67 997	68 997	69 997
19	59·6 997	60·6 997	61·6 997	62·7 997	63·7 997	64·7 997	65·7 997	66·7 997	67·7 996	68·7 996
20	59·2 996	60·3 996	61·3 996	62·3 996	63·3 996	64·3 996	65·4 996	66·4 996	67·4 996	68·4 996
21	58·9 995	59·9 995	61 995	62 995	63 995	64 995	65 995	66 995	67 995	68·1 995
22	58·5 994	59·5 994	60·6 994	61·6 994	62·7 994	63·7 994	64·7 994	65·7 994	66·7 994	67·8 994
23	58·1 993	59·2 993	60·2 993	61·3 993	62·3 993	63·3 993	64·3 993	65·4 993	66·4 993	67·4 993
24	57·8 992	58·9 992	59·9 992	61 992	62 992	63 992	64 992	65 992	66 992	67·1 992
25	57·5 992	58·5 992	59·5 992	60·6 991	61·6 991	62·6 991	63·7 991	64·7 991	65·7 991	66·7 991

Temp. C.	71c	72c	73c	74c	75c	76c	77c	78c	79c	80c
Deg. 10	72·6 1004	73·5 1004	74·5 1005	75·5 1005	76·5 1005	77·5 1005	78·5 1005	79·5 1005	80·5 1005	81·5 1005
11	72·3 1004	73·2 1004	74·2 1004	75·2 1004	76·2 1004	77·2 1004	78·2 1004	79·2 1004	80·2 1004	81,2 1004
12	72 1003	72·9 1003	73·9 1003	74·9 1003	75·9 1003	76·9 1003	77·9 1003	78·9 1003	79·9 1003	80·9 1003
13	71·6 1002	72·6 1002	73·6 1002	74·6 1002	75·6 1002	76·6 1002	77·6 1002	78·6 1002	79·6 1002	80·6 1002
14	71·3 1001	72·3 1001	73·3 1001	74·3 1001	75·3 1001	76·3 1001	77·3 1001	78·3 1001	79·3 1001	80·3 1001
15	71 1000	72 1000	73 1000	74 1000	75 1000	76 1000	77 1000	78 1000	79 1000	80 1000
16	70·7 999	71·7 999	72·7 999	73·7 999	74·7 999	75·7 999	76·7 999	77·7 999	78·7 999	79·7 999
17	70·3 998	71·3 998	72·3 998	73·3 998	74·3 998	75·4 998	76·4 998	77·4 998	78·4 998	79·4 998
18	70 997	71 997	72 997	73 997	74 997	75·1 997	76·1 997	77·1 997	78·1 997	79·1 997
19	69·7 996	70·7 996	71·7 996	72·7 996	73·7 996	74·7 996	75·8 996	76·8 996	77·8 996	78·8 996
20	69·4 996	70·4 996	71·4 995	72·4 995	73·4 995	74·4 995	75·5 995	76·5 995	77·5 995	78·5 995
21	69·1 995	70·1 995	71·1 995	72·1 994	73·1 994	74·1 994	75·2 994	76·2 994	77·2 994	78·2 994
22	68·8 994	69·8 994	70·8 994	71·8 994	72·8 993	73·8 993	74·8 993	75·9 993	76·9 993	77·9 993
23	68·4 993	69·4 993	70·5 993	71·5 993	72·5 992	73·5 992	74·5 992	75·5 992	76·6 992	77·6 992
24	68·1 992	69·1 992	70·1 992	71·2 992	72·2 992	73·2 992	74·2 992	75·2 991	76·3 991	77·3 991
25	67·8 991	68·8 991	69·8 991	70·8 991	71·8 991	72·8 991	73·9 991	74·9 991	76 991	77 991

Digitized by Google

Alcoömetrical Table of real Strength, by M. Gay-Lussac (continued).

Temp. C.	81c	82c	83c	84c	85c	86c	87c	88c	89c	90c
Deg. 10	82·4 1005	83·4 1005	84·4 1005	85·4 1005	86·4 1005	87·4 1005	88·3 1005	89·3 1005	90·2 1005	91·2 1005
11	82·2 1004	83·1 1004	84·1 1004	85·1 1004	86·1 1004	87·1 1004	88 1004	89 1004	90 1004	91 1004
12	81·9 1003	82·9 1003	83·9 1003	84·8 1003	85·8 1003	86·8 1003	87·8 1003	88·7 1003	89·7 1003	90·7 1003
13	81·6 1002	82·6 1002	83·6 1002	84·6 1002	85·5 1002	86·5 1002	87·5 1002	88·5 1002	89·5 1002	90·5 1002
14	81·3 1001	82·3 1001	83·3 1001	84·3 1001	85·3 1401	86·3 1001	87·3 1001	88·2 1001	89·2 1001	90·2 1001
15	81 1000	82 1000	83 1000	84 1000	85 1000	86 1000	87 1000	88 1000	89 1000	90 1000
16	80·7 999	81·7 999	82·7 999	83·7 999	84·7 999	85·7 999	86·7 999	87·7 999	88·7 999	89·7 999
17	80·4 998	81·4 998	82·4 998	83·4 998	84·4 998	85·4 998	86·4 998	87·4 998	88·4 998	89·5 998
18	80·1 997	81·1 997	82·1 997	83·1 997	84·1 997	85·2 997	86·2 997	87·2 997	88·2 997	89·2 997
19	79·8 996	80·8 996	81·9 996	82·9 996	83·9 996	84·9 996	85·9 996	86·9 996	87·9 996	88·9 996
20	79·5 995	80·5 995	81·6 995	82·6 995	83·6 995	84·6 995	85·6 995	86·6 995	87·7 995	88·7 995
21	79·2 994	80·2 994	81·3 994	82·3 994	83·3 994	84·3 994	85·3 994	86·4 994	87·4 994	88·4 994
22	78·9 993	79·9 993	81 993	82 993	83 993	84 993	85 993	86·1 993	87·1 993	88·2 993
23	78·6 992	79·6 992	80·7 992	81·7 992	82·7 992	83·8 992	84·8 992	85·8 992	86·8 992	87·9 992
24	78·3 991	79·3 991	80·4 991	81·4 991	82·4 991	83·5 991	84·5 991	85·5 991	86·5 991	87·6 991
25	78 991	79 991	80·1 990	81·1 990	82·1 990	83·2 990	84·2 990	85·2 990	86·3 990	87·4 990

The *boiling point* of mixtures of alcohol and water likewise differs with the strength of such mixtures.

According to Gay-Lussac, absolute alcohol boils at 78·4° C. (173° F.) under a pressure of 760 *millimetres* (*the millimetre being* 0·03937 *English inches*). When mixed with water, of course its boiling point rises in proportion to the quantity of water present, as is the case in general with mixtures of two fluids of greater and less volatility. A mixture of alcohol and water, however, presents this anomaly, according to Soëmmering: when the mixture contains less than six per cent. of alcohol, those portions which first pass off are saturated with water, and the alcoholic solution in the retort becomes richer, till absolute alcohol passes over; but when the mixture contains more than six per cent. of water the boiling point rises, and the quantity of alcohol in the distillate steadily diminishes as the distillation proceeds.

According to Gröning's researches, the following temperatures of the alcoholic vapours correspond to the accompanying contents of alcohol in per-centage of volume which are disengaged in the boiling of the spirituous liquid.

Temperature.	Alcoholic content of the vapour.	Alcoholic content of the boiling liquid.	Temperature.	Alcoholic content of the vapour.	Alcoholic content of the boiling liquid.
Fahr. 170·0	93	92	Fahr. 189·8	71	20
171·8	92	90	192·0	68	18
172	91	85	164	66	15
172·8	90½	80	196·4	61	12
174	90	70	198·6	55	10
174·6	89	70	201	50	7
176	87	65	203	42	5
178·3	85	50	205·4	36	3
180 8	82	40	207·7	28	2
183	80	35	210	13	1
185	78	30	212	0	0
187·4	76	25			

Digitized by Google

Gröning undertook this investigation in order to employ the thermometer as an alcoholometer in the distillation of spirits; for which purpose he thrust the bulb of the thermometer through a cork inserted into a tube fixed in the capital of the still. The state of the barometer ought also to be considered in making comparative experiments of this kind. Since, by this method, the alcoholic content may be compared with the temperature of the vapour that passes over at any time, so, also, the contents of the whole distillation may be found approximately; and the method serves as a convenient means of making continual observations on the progress of the distillation.

From the mean of a great many experiments, Dr. Ure drew up the following Table, which shows the boiling point of alcohol of various specific gravities:—

Boiling Point.	Specific Gravity.	Boiling Point.	Specific Gravity.
178·5 F.	0·9200	185·6 F.	0·9665
179·75 „	0·9321	189·0 „	0·9729
180·4 „	0·9420	191·8 „	0·9786
182·01 „	0·9516	196·4 „	0·9850
183·40 „	0·960	202·0 „	0·992

Density of the Vapour.—One volume of alcohol yields 488·3 volumes of vapour at 212° F. The specific gravity of the vapour, taking air as unity, was found by Gay-Lussac to be 1·6133. [Its vapour-density, referred to hydrogen as unity, is 13·3605?]

Spirituous vapour passed through an ignited tube of glass or porcelain is converted into carbonic oxide, water, hydrogen, carburetted hydrogen, olefiant gas, naphthaline, empyreumatic oil, and carbon; according to the degree of heat and nature of the tube, these products vary. Anhydrous alcohol is a non-conductor of electricity, but is decomposed by a powerful voltaic battery. Alcohol burns in the air with a blue flame into carbonic acid and water; the water being heavier than the spirit, because 46 parts of alcohol contain 6 of hydrogen, which form 54 of water. In oxygen the combustion is accompanied with great heat, and this flame, directed through a small tube, powerfully ignites bodies exposed to it.

Platinum in a finely divided state has the property of determining the combination of alcohol with the oxygen of the air in a remarkable manner. A ball of spongy platinum, placed slightly above the wick of a lamp fed by spirit and communicating with the wick by a platinum wire, when once heated, keeps at a red heat, gradually burning the spirit. This has been applied in the construction of the so-called "philosophical pastilles;" eau-de-cologne or other perfumed spirit being thus made to diffuse itself in a room.

Mr. Gill has also practically applied this in the construction of an alcohol lamp without flame.

A coil of platinum wire, of about the one-hundredth part of an inch in thickness, is coiled partly round the cotton wick of a spirit lamp, and partly above it, and the lamp lighted to heat the wire to redness; on the flame being extinguished, the alcohol vapour keeps the wire red hot for any length of time, so as to be in constant readiness to ignite a match, for example. This lamp affords sufficient light to show the hour by a watch in the night, with a very small consumption of spirit.

This property of condensing oxygen, and thus causing the union of it with combustible bodies, is not confined to platinum, but is possessed, though in a less degree, by other porous bodies. If we moisten sand in a capsule with absolute alcohol, and cover it with previously heated nickel powder, protoxide of nickel, cobalt powder, protoxide of cobalt, protoxide of uranium, or oxide of tin (these six bodies being procured by ignition of their oxalates in a crucible), or finely powdered peroxide of manganese, combustion takes place, and continues so long as the spirituous vapour lasts.

Solvent Power.—One of the properties of alcohol most valuable in the arts is its *solvent power.*

It dissolves gases to a very considerable extent, which gases, if they do not enter into combinations with the alcohol, or act chemically upon it, are expelled again on boiling the alcohol.

Several salts, especially the deliquescent, are dissolved by it, and some of them give a colour to its flame; thus the solutions of the salts of strontia in alcohol burn with a *crimson flame*, those of copper and borax with a *green* one, lime a *reddish*, and baryta with a *yellow* flame.

This solvent power is, however, most remarkable in its action upon resins, ethers essential oils, fatty bodies, alkaloids, as well as many organic acids. In a similar

Digitized by Google

way it dissolves iodine, bromine, and in small quantities sulphur and phosphorus. In general it may be said to be an excellent solvent for most hydrogenised organic substances.

In consequence of this property it is most extensively used in the chemical arts: *e.g.* for the solution of gum-resins, &c., in the manufacture of varnishes; in pharmacy, for the separating of the active principles of plants, in the preparation of tinctures. It is also employed in the formation of chloroform, ether, spirits of nitre, &c.

ALCOHOL, METHYLATED. It was for a long time a great desideratum for the manufacturer to obtain spirit free from duty. The Government, feeling the necessity for this, have sanctioned the sale of spirit which has been flavoured with methyl-alcohol, so as to render it unpalatable, *free of duty*, under the name of "*methylated spirit.*" This methylated spirit can now be obtained, in large quantities only, and by giving suitable security to the Board of Inland Revenue of its employment for manufacturing purposes only, and must prove of great value to those manufacturers who are large consumers.

Professors Graham, Hofmann, and Redwood, in their "Report on the Supply of Spirit of Wine, free of duty, for use in the Arts and Manufactures," addressed to the Chairman of the Board of Inland Revenue, came to the following conclusions:—

"From the results of this inquiry it has appeared that means exist by which spirit of wine, produced in the usual way, may be rendered unfit for human consumption, as a beverage, without materially impairing it for the greater number of the more valuable purposes in the arts to which spirit is usually applied. To spirit of wine, of not less strength than corresponds to density 0·830, it is proposed to make an addition of 10 per cent. of purified wood naphtha (*wood or methylic spirit*), and to issue this mixed spirit for consumption, duty free, under the name of *Methylated Spirit.* It has been shown that methylated spirit resists any process for its purification; the removal of the substance added to the spirit of wine being not only difficult, but, to all appearance, impossible; and further, that no danger is to be apprehended of the methylated spirit being ever compounded so as to make it palatable. . . . . It may be found safe to reduce eventually the proportion of the mixing ingredient to 5 per cent., or even a smaller proportion, although it has been recommended to begin with the larger proportion of 10 per cent."

And further, the authors justly remark:—"The command of alcohol at a low price is sure to suggest a multitude of improved processes, and of novel applications, which can scarcely be anticipated at the present moment. It will be felt far beyond the limited range of the trades now more immediately concerned in the consumption of spirits; like the repeal of the duty on salt, it will at once most vitally affect the chemical arts, and cannot fail, ultimately, to exert a beneficial influence upon many branches of industry."

And in additional observations, added subsequently to their original Report, the chemists above named recommend the following restriction upon the sale of the methylated spirit:—"That the methylated spirit should be issued, by agents duly authorised by the Board of Inland Revenue, to none but manufacturers, who should themselves consume it; and that application should always be made for it according to a recognised form, in which, besides the quantity wanted, the applicant should state the use to which it is to be applied, and undertake that it should be applied for that purpose only. The manufacturer might be permitted to retail varnishes and other products containing the methylated spirit, but not the methylated spirit itself in an unaltered state." They recommend that the methylated spirit should not be made with the ordinary crude, very impure wood naphtha, since this could not be advantageously used as a solvent for resins by hatters and varnish makers, as the less volatile parts of the naphtha would be retained by the resins after the spirit had evaporated, and the quality of the resin would be thus impaired. If, however, the methylated spirit be originally prepared with the crude wood naphtha, it may be purified by a simple distillation from 10 per cent. of potash.

It appears that the boon thus afforded to the manufacturing community of obtaining spirit *duty free* has been acknowledged and appreciated; and now for most purposes, where the small quantity of wood-spirit does not interfere, the methylated spirit is generally used.

It appears that even ether and chloroform, which one would expect to derive an unpleasant flavour from the wood spirit, are now made of a quality quite unobjectionable from the methylated spirit; but care should be taken, especially in the preparation of medicinal compounds, not to extend the employment of the methylated spirit beyond its justifiable limits, lest so useful an article should get into disrepute.* Methylated spirit can be procured also in small quantities from the wholesale dealers, containing in solution 1oz. to the gallon of shellac. under the name of "finish."

* Some difference of opinion appears to exist whether *Chloroform* can be obtained *pure* from methylated spirit. See METHYL.

Digitized by Google

ALCOHOLATES. Graham has shown that alcohol forms crystallisable compounds with several salts. These bodies, which he calls "*Alcoholates*," are in general rather unstable combinations, and almost always decomposed by water. Among the best known are the following:—

Alcoholate of chloride of calcium - - -	$2\ C^4H^6O^2$, Ca Cl
„ „ of zinc - - -	$C^4H^6O^2$, Zn Cl
„ bichloride of tin - - -	$C^4H^6O^2$, Tn Cl
„ nitrate of magnesia - - -	$3\ C^4H^6O^2$, Mg O, NO_5

ALCOHOLOMETRY, or ALCOÖMETRY. *Determination of the Strength of Mixtures of Alcohol and Water.* Since the commercial value of the alcoholic liquors, commonly called "spirits," is determined by the amount of pure or absolute alcohol present in them, it is evident that a ready and accurate means of determining this point is of the highest importance to all persons engaged in trade in such articles.

If the mixture contain nothing but alcohol and water, it is only necessary to determine the *density* or *specific gravity* of such a mixture; if, however, it contain saccharine matters, colouring principles, &c., as is the case with wine, beer, &c., other processes become necessary, which will be fully discussed hereafter.

The determination of the specific gravity of spirit, as of most other liquids, may be effected, with perhaps greater accuracy than by any other process, by means of a stoppered specific-gravity bottle. If the bottle be of such a size as exactly to hold 1000 grains of distilled water at 60° F., it is only necessary to weigh it full of the spirit at the same temperature, when (the weight of the bottle being known) the specific gravity is obtained by a very simple calculation. See SPECIFIC GRAVITY.

This process, though very accurate, is somewhat troublesome, especially to persons unaccustomed to accurate chemical experiments, and it involves the possession of a delicate balance. The necessity for this is however obviated by the employment of one of the many modifications of the common *hydrometer*. This is a floating instrument, the use of which depends upon the principle, that a solid body immersed into a fluid is buoyed upwards with a force equal to the weight of the fluid which it displaces, *i.e.* to its own bulk of the fluid; consequently, the denser the spirituous mixture, or the less alcohol it contains, the higher will the instrument stand in the liquid; and the less dense, or the more spirit it contains, the lower will the apparatus sink into it.

There are two classes of hydrometers. 1st. Those which are always immersed in the fluid to the same depth, and to which weights are added to adjust the instrument to the density of any particular fluid. Of this kind are Fahrenheit's, Nicholson's, and Guyton de Morveau's hydrometers.

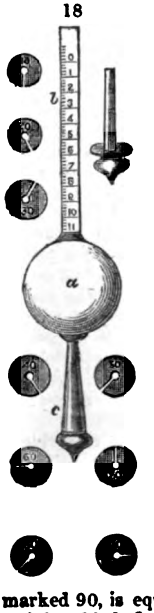

2nd. Those which are always used with the same weight, but which sink into the liquids to be tried, to different depths, according to the density of the fluid. Of this class are most of the common glass hydrometers, such as Beaumé's, Curteis's, Gay-Lussac's, Twaddle's, &c.

Sykes's and Dicas's combine both principles. See HYDROMETERS.

Sykes's hydrometer, or alcoholometer, is the one employed by the Board of Excise, and therefore the one most extensively used in this country.

This instrument does not immediately indicate the density or the per-centage of absolute alcohol, *but the degree above or below proof*—the meaning of which has been before detailed. (p. 44.)

It consists of a spherical ball or float, *a*, with an upper and lower stem of brass, *b* and *c*. The upper stem is graduated into ten principal divisions, which are each subdivided into five parts. The lower stem, *c*, is made conical, and has a loaded bulb at its extremity. There are nine movable weights, numbered respectively by tens from 10 to 90. Each of these circular weights has a slit in it, so that it can be placed on the conical stem, *c*. The instrument is adjusted so that it floats with the surface of the fluid coincident with zero on the scale, in a spirit of specific gravity ·825 at 60° F., this being accounted by the Excise as "*standard alcohol*." In weaker spirit, which has therefore a greater density, the hydrometer will not sink so low; and if the density be much greater, it will be necessary to add one of the weights to cause the entire immersion of the bulb of the instrument. Each weight represents so many principal divisions of the stem, as its number indicates; thus, the heaviest weight, marked 90, is equivalent to 90 divisions of the stem, and the instrument, with the weight added, floats at 0 in distilled water. As each principal division on the stem is

Digitized by Google

divided into five subdivisions, the instrument has a range of 500 degrees between the standard alcohol (specific gravity ·825) and water. There is a line on one of the side faces of the stem, *b*, near division 1 of the drawing, at which line the instrument with the weight 60 attached to it floats in spirit exactly of the strength of *proof*, at a temperature of 51° F.

In using this instrument, it is immersed in the spirit, and pressed down by the hand until the whole of the graduated portion of the upper stem is wet. The force of the hand required to sink it will be a guide to the selection of the proper weight. Having taken one of the circular weights necessary for the purpose, it is slipped on to the lower conical stem. The instrument is again immersed, and pressed down as before to 0, and then allowed to rise and settle at any point. The eye is then brought to the level of the surface of the spirit, and the part of the stem cut by the surface, *as seen from below*, is marked. The number thus indicated by the stem is added to the number of the weight, and the sum of these, together with the *temperature* of the spirit, observed at the same time by means of a thermometer, enables the operator, by reference to a Table which is sold to accompany the instrument, to find the strength of the spirit tested.

These Tables are far too voluminous to be quoted here; and this is unnecessary, since the instrument is never sold without them.

A modification of Sykes's hydrometer has been recently adopted for testing alcoholic liquors which is perhaps more convenient, as the necessity for the loading weights is done away with, the stem being sufficiently long not to require them. It is constructed of glass, and is in the shape of a common hydrometer, the stem being divided into degrees; it carries a small spirit thermometer in the bulb, to which a scale is fixed, ranging from 30° to 82° F. (0 to 12° C.) There are Tables supplied with the hydrometer, which are headed by the degrees and half degrees of the thermometric scale; and the corresponding content of spirit, over or under proof at the respective degree of the Table, is placed opposite each degree of the hydrometer.

By means of either of these instruments, and by the use of the Tables accompanying them, we learn the strength, in degrees, *above or below proof*; and the following Table by Dr. Ure will be found most useful in converting these numbers into specific gravities.

Per cent. over Proof.	Specific Gravity.	Per cent. over Proof.	Specific Gravity.	Per cent. over Proof.	Specific Gravity.	Per cent. over Proof.	Specific Gravity.	Per cent. over Proof.	Specific Gravity.
67·0	0·8156	52·1	0·8448	37·1	0·8692	21·9	0·8912	7·1	0·9111
66·5	0·8166	51·5	0·8459	36·4	0·8702	21·4	0·8919	6·5	0·9118
66·1	0·8174	51·1	0·8465	35·9	0·8709	20·9	0·8926	5·9	0·9126
65·5	0·8188	50·5	0·8476	35·5	0·8716	20·4	0·8933	5·6	0·9130
65·0	0·8199	50·1	0·8482	35·0	0·8723	19·9	0·8940	5·0	0·9137
64·5	0·8210	49·5	0·8493	34·5	0·8730	19·3	0·8948	4·5	0·9145
64·0	0·8221	49·1	0·8499	34·1	0·8737	19·1	0·8951	3·9	0·9152
63·6	0·8227	48·5	0·8510	33·6	0·8744	18·6	0·8959	3·3	0·9159
63·1	0·8238	48·0	0·8516	32·9	0·8755	18·0	0·8966	3·0	0·9163
62·5	0·8249	47·6	0·8523	32·4	0·8762	17·5	0·8974	2·4	0·9170
62·0	0·8259	47·0	0·8533	32·0	0 8769	16·9	0·8981	1·9	0·9178
61·6	0·8266	46·6	0·8540	31·5	0·8776	16·4	0·8989	1·6	0·9182
61·1	0·8277	46·0	0·8550	31·0	0·8783	15·9	0·8996	1·0	0·9189
60·5	0·8287	45·6	0·8556	30·5	0·8790	15·6	0·9000	0·3	0·9196
60·0	0·8298	45·0	0·8566	30·0	0·8797	15·0	0·9008	proof	0·9200
59·5	0·8308	44·6	0·8573	29·5	0·8804	14·5	0·9015	under	proof
59·1	0·8315	43·9	0·8583	29·0	0·8811	13·9	0·9023	1·3	0·9214
58·6	0·8326	43·5	0·8590	28·5	0·8818	13·4	0·9030	2·2	0·9226
58·0	0·8336	43·1	0·8597	28·0	0·8825	13·1	0·9034	3·1	0·9237
57·5	0·8347	42·6	0·8604	27·5	0·8832	12·5	0·9041	4·0	0·9248
57·1	0·8354	42·0	0·8615	27·0	0·8840	12·0	0·9049	5·0	0·9259
56·6	0·8365	41·5	0·8622	26·5	0·8847	11·4	0·9056	6·0	0·9270
56·0	0·8376	41·1	0·8629	26·0	0·8854	11·1	0·9060	7·0	0·9282
55·5	0·8386	40·6	0·8636	25·5	0·8861	10·6	0·9067	8·0	0·9295
55·0	0·8366	40·0	0·8646	25·0	0·8869	10·0	0·9075	9·0	0·9306
54·6	0·8043	39·6	0·8653	24·5	0·8876	9·4	0·9082	10·0	0·9318
54·1	0·8413	39·1	0·8660	24·0	0·8883	8·9	0·9089	11·0	0·9329
53·5	0·8424	38·4	0·8671	23·5	0·8890	8·3	0·9097	12·1	0·9341
53·1	0·8431	38·0	0·8678	23·0	0·8897	8·0	0·9100	13·1	0·9353
52·5	0·8441	37·6	0·8685	22·5	0·8904	7·4	0·9107	14·2	0·9364

Digitized by Google

Per cent. over Proof	Specific Gravity.	Per cent. over Proof.	Specific Gravity.	Per cent. over Proof.	Specific Gravity.	Per cent. over Proof.	Specific Gravity.	Per cent. over Proof.	Specific Gravity.
15·3	0·9376	32·3	0·9542	49·1	0·9665	67·4	0·9774	84·0	0·9878
16·0	0·8384	33·2	0·9550	50·3	0·9674	68·0	0·9778	85·2	0·9886
17·1	0·9396	34·2	0·9557	51·0	0·9677	69·4	0·9786	86·3	0·9894
18·2	0·9407	35·1	0·9565	52·2	0·9685	70·1	0·9790	87·4	0·9902
19·3	0·9419	36·1	0·9573	53·3	0·9693	71·4	0·9798	88·0	0·9906
20·0	0·9426	37·1	0·9580	54·8	0·9701	72·1	0·9802	89·1	0·9914
21·2	0·9437	38·1	0·9588	56·2	0·9709	73·5	0·9810	90·2	0·9922
22·2	0·9448	39·1	0·9596	57·6	0·9718	74·1	0·9814	91·2	0·9930
23·1	0·9456	40·1	0·9603	58·3	0·9722	75·4	0·9822	92·3	0·9938
23·9	0·9464	41·1	0·9611	59·0	0·9726	76·1	0·9826	93·3	0·9946
24·3	0·9468	42·2	0·9619	60·4	0.9734	77·3	0·9834	94·3	0·9954
25·1	0·9476	43·3	0·9627	61·1	0·9738	78·0	0·9838	95·4	0·9962
26·3	0·9488	44·4	0·9635	61·8	0·9742	79·2	0·9846	96·4	0·9970
27·1	0·9496	45·0	0·9638	63·2	0·9750	80·4	0·9854	97·3	0·9978
28·0	0·9503	46·1	0·9646	63·9	0·9754	81·1	0·9858	98·2	0·9986
29·2	0·9515	47·3	0·9654	65·3	0·9762	82·3	0·9866	99·1	0·9993
30·1	0·9522	47·9	0·9657	66·0	0·9766	83·5	098·74	100·0	1·0000
31·0	0·9530								

And now, by reference either to Drinkwater's, Tralle's, or Gay-Lussac's Tables, the operator will be enabled to find, by the knowledge of the density or specific gravity, at the temperature at which the operation was performed, the per-centage of real alcohol, either by weight or by volume.

In France, Gay-Lussac's *alcoolomètre* is usually employed. It is a common glass hydrometer, with the scale on the stem divided into 100 parts or degrees. The lowest division, marked 0, denotes the specific gravity of pure water; and 100, that of absolute alcohol, both at 15° C. (59° F.) The intermediate degrees, of course, show the per-centage of absolute alcohol by volume at 15° C.; and the instrument is accompanied by the Tables already given for ascertaining the per-centage at any other temperature.

Alcoholometry of Liquids containing besides Alcohol, Saccharine Matters, Colouring Principles, &c., such as Wines, Beer, Liqueurs, &c.

In order to determine the proportion of absolute alcohol contained in wines, or other mixtures of alcohol and water with saccharine and other non-volatile substances, the most accurate method consists in submitting a known volume of the liquid to distillation (in a glass retort, for instance); then, by determining the specific gravity of the distilled product, to ascertain the per-centage of alcohol in this distillate, which may be regarded as essentially a mixture of pure alcohol and water. The distillation is carried on until the last portions have the gravity of distilled water; by then ascertaining the total volume of the distillate, and with the knowledge of its per-centage of alcohol and the volume of the original liquor used, the method of calculating the quantity of alcohol present in the wine, or other liquor, is sufficiently obvious.

In carrying out these distillations care must be taken to prevent the evaporation of the spirit from the distillate, by keeping the condenser cool. And Professor Mulder recommends the use of a refrigerator, consisting of a glass tube fixed in the centre of a jar, so that it may be kept filled with cold water. The tube must be bent at a right angle, and terminate in a cylindrical graduated measure-glass, shaped like a bottle.*

It is well to continue the distillation until about two-thirds of the liquid has passed over.

This process, though the most accurate for the estimation of the strength of alcoholic liquors, is still liable to error. The volatile acids and ethers pass over with the alcohol into the distillate, and, to a slight extent, affect the specific gravity. This error may be, to a great extent, overcome by mixing a little chalk with the wine, or other liquor, previous to distillation.

By this method Professor Brande made, some years ago, determinations of the strength of the following wines, and other liquors†:—

* The Chemistry of Wine, by G. J. Mulder, edited by H. Bence Jones, M.D.
† Brande's Manual of Chemistry; also Philosophical Trans., 1811.

Digitized by Google

Proportion of Spirit per Cent. by Measure.

Lissa	average 25·41	Orange	average 11·26
Raisin	„ 25·12	Elder	„ 8·79
Marsala	„ 25·09		
Port (of 7 samples)	„ 22·96	Cider	average 5·21 to 9·87
Madeira	„ 22·27	Perry	„ 7·26
Sherry (of 4 samples)	„ 19·17	Mead	„ 7·32
Teneriffe	19·79	Ale, Burton	8·88
Lisbon	18·94	Ale, Edinburgh	average 6·87 — 6·20
Malaga	18·94	Ale, Dorchester	5·55
Bucellas	18·49	Brown Stout	6·80
Cape Madeira	average 20·51	London Porter	average 4·20
Roussillon	„ 19·00	London Small Beer	„ 1·28
Claret	„ 15·10		
Sauterne	„ 14·22	Brandy	„ 53·39
Burgundy	„ 14·57	Rum	„ 53·68
Hock	„ 12·08	Gin	„ 57·60
Tent	„ 13·30	Scotch Whisky	„ 54·32
Champagne	„ 12·61	Irish Whisky	„ 53·90
Gooseberry	„ 11·84		

The following results were obtained by the writer more recently by this process (1854).

Per-centage of Alcohol by Volume.

Port (1834)	22·46	Port (best)	20·2
Sherry (Montilla)	19·95	Marcobrunner	8·3
Madeira	22·40	Champagne (1st)	12·12
Claret (Haut Brion)	10·0	Champagne (2nd)	10·85
Chambertin	11·7	Home Ale	6·4
Sherry (low quality)	20·7	Export Ale	6 4
Sherry (brown)	23·1	Strong Ale	9·0
Amontillado	20·5	Stout	5·7
Mansanilla	14·4	Porter	4·18

M. l'Abbé Brossard-Vidal, of Toulon*, has proposed to estimate the strength of alcoholic liquors by determining their boiling point. Since water boils at 100° C. (212° F.), and absolute alcohol at 78·4° (173° F.), it is evident that a mixture of water and alcohol will have a higher boiling point the larger the quantity of water present in it. This method is even applicable to mixtures containing other bodies in solution besides spirit and water, since it has been shown that sugar and salts, when present (in moderate quantities), have only a very trifling effect in raising the boiling point; and the process has the great advantage of facility and rapidity of execution, though of course not comparable to the method by distillation, for accuracy.

Mr. Field's patent (1847) alcoholometer is likewise founded upon the same principle. The instrument was subsequently improved by Dr. Ure.

The apparatus consists simply of a spirit-lamp placed under a little boiler containing the alcoholic liquor, into which fits a thermometer of very fine bore.

When the liquor is stronger than proof spirit, the variation in the boiling point is so small that an accurate result cannot possibly be obtained; and, in fact, spirit approaching this strength should be diluted with an equal volume of water before submitting it to ebullition, and then the result doubled.

Another source of error is the elevation of the boiling point, when the liquor is kept heated for any length of time; it is, however, nearly obviated by the addition of common salt to the solution in the boiler of the apparatus, in the proportion of 35 or 40 grains. In order to correct the difference arising from higher or lower pressure of the atmosphere, the scale on which the thermometric and other divisions are marked is made movable up and down the thermometer tube; and every time, before commencing a set of experiments, a preliminary experiment is made of boiling some pure distilled water in the apparatus, and the zero point on the scale (which indicates the boiling point of water) is adjusted at the level of the surface of the mercury. On p. 54 will be found a Table showing the boiling point of alcohol of different specific gravities.

But even when performed with the utmost care, this process is still liable to very

* Comptes Rendus, xxvii. 374.

Digitized by Google

considerable errors, for it is extremely difficult to observe the boiling point to within a degree ; and after all, the fixed ingredients present undoubtedly do seriously raise the boiling point of the mixture—in fact, to the extent of from half to a whole degree, according to the amount present.

Silbermann's Method.—M. Silbermann* has proposed another method of estimating the strength of alcoholic liquors, based upon their expansion by heat. It is well known that, between zero and 100° C. (212° F.), the dilatation of alcohol is triple that of water, and this difference of expansion is even greater between 25° C. (77° F.) and 50° C. (122° F.); it is evident, therefore, that the expansion between these two temperatures becomes a measure of the amount of alcohol present in any mixture. The presence of salts and organic substances, such as sugar, colouring, and extractive matters, in solution or suspension in the liquid, is said not materially to affect the accuracy of the result; and M. Silbermann has devised an apparatus for applying this principle, in a ready and expeditious manner, to the estimation of the strength of alcoholic liquors. The instrument may be obtained of the philosophical instrument makers of London and of Liverpool.

19

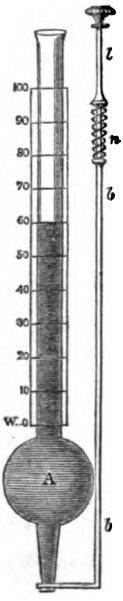

It consists of a brass plate, on which are fixed—1st. An ordinary mercurial thermometer graduated from 22° to 50° C. (77° to 122° F.), these being the working temperatures of the *dilatatometer*; and 2ndly, the dilatatometer itself, which consists of a glass pipette, open at both ends, and of the shape shown in the figure. A valve of cork or india-rubber closes the tapering end A, which valve is attached to a rod, *b b*, fastened to the supporting plate, and connected with a spring, *n*, by which the lower orifice of the pipette can be opened or closed at will. The pipette is filled, exactly up to the zero point, with the mixture to be examined—this being accomplished by the aid of a piston working tightly in the long and wide limb of the pipette; the action of which serves also another valuable purpose—viz., that of drawing any bubbles of air out of the liquid. By now observing the dilatation of the column of liquid when the temperature of the whole apparatus is raised, by immersion in a water-bath, from 25° to 50°, the co-efficient of expansion of the liquid is obtained, and hence the proportion of alcohol—the instrument being, in fact, so graduated, by experiments previously made upon mixtures of known composition, as to give at once the per-centage of alcohol.

Another alcoholometer, which, like the former, is more remarkable for the great facility and expedition with which approximative results can be obtained than for a high degree of accuracy, was invented by M. Geisler, of Bonn, and depends upon the measurement of the tension of the vapour of the liquid, as indicated by the height to which it raises a column of mercury.

Geisler's Alcoholometer.—It consists of a closed vessel in which the alcoholic mixture is raised to the boiling point, and the tension of the vapour observed by the depression of a column of mercury in one limb of a tube, the indication being rendered more manifest by the elevation of the other end of the column.

20

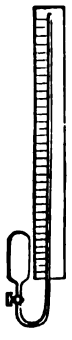

The wine or other liquor of which it is desired to ascertain the strength, is put into the little flask, F, which, when completely filled, is screwed on to the glass which contains mercury, and is closed by a stopcock at S. The entire apparatus, which at present is an inverted position, is now stood erect, the flask and lower extremity of the tube being immersed in a water-bath. The vinous liquid is thus heated to the boiling point, and its vapour forces the mercury up into the long limb of the tube. The instrument having been graduated, once for all, by actual experiment, the per-centage of alcohol is read off at once on the stem by the height to which the mercurial column rises.

To show how nearly the results obtained by this instrument agree with those obtained by the distillation process, comparative experiments were made on the same wines by Dr. Bence Jones.†

* Comptes Rendus, xxvii. 418.

† On the Acidity, Sweetness, and Strength of different Wines, by H. Bence Jones, M.D., F.R.S., Proceedings of the Royal Institution, February, 1854.

Digitized by Google

	By Distillation (Mr. Witt) per cent. by measure.	By Alcoholometer per cent. by measure.
Port, 1834	22·46	23·2 23 5
Sherry, Montilla	19·95	20·7 20·6 20·6
Madeira	22·40	23·5 23·2
Haut Brion claret	10·0	11·1 11·1
Chambertin	11·7	13·2 13·0
Low-quality sherry	20·7	21·1 20·9
Brown sherry	23·1	23·0 23·3
Amontillado	20·5	21·0 21·0
Mansanilla	14·4	15·4 15·4
Port, best	20·2	21·1 21·0
Marcobrunner	8·3	9·7 9·5
Home ale	6·4	7·0 7·1
Export ale	6·4	7·0 6·9
Strong ale	2·0	10·7 10·8

Tabarié's Method.—There is another method of determining the alcoholic contents of mixtures, which especially recommends itself on account of its simplicity. The specific gravity of the liquor is first determined, half its volume is next evaporated in the open air, sufficient water is then added to the remainder to restore its original volume, and the specific gravity again ascertained. By deducting the specific gravity before the expulsion of the alcohol from that obtained afterwards, the difference gives a specific gravity indicating the per-centage of alcohol, which may be found by referring to Gay-Lussac's or one of the other Tables. Tabarié has constructed a peculiar instrument for determining these specific gravities, which he calls an œnometer; but they may be performed either by a specific-gravity bottle or by a hydrometer in the usual way.

Of course this method cannot be absolutely accurate; nevertheless, Prof. Mulder's experience with it has led him to prefer it to any of the methods before described, especially where a large number of samples have to be examined. He states that the results are almost as accurate as those obtained by distillation. The evaporation of the solution may be accelerated by conducting hot steam through it.

Adulterations.— Absolute alcohol should be entirely free from water. This may be recognised by digesting the spirit with pure anhydrous sulphate of copper. If the spirit contain any water, the white salt becomes tinged blue, from the formation of the blue hydrated sulphate of copper.

Rectified spirit, proof spirit, and the other mixtures of pure alcohol and water, should be colourless, free from odour and taste. If containing methylic or amylic alcohols, they are immediately recognised by one or other of these simple tests.

Dr. Ure states that if wood spirit be contained in alcohol, it may be detected to the greatest minuteness by the test of caustic potash, a little of which, in powder, causing wood spirit to become speedily yellow and brown, while it gives no tint to alcohol. Thus 1 per cent. of wood spirit may be discovered in any sample of spirits of wine.

The admixture with a larger proportion than the due amount of water is of course determined by estimating the per-centage of absolute alcohol by one or other of the several methods just described in detail.

The adulterations and sophistications to which the various spirits known as rum, brandy, whisky, gin, &c., are subjected, will be best described under these respective heads, since these liquors are themselves mixtures of alcohol and water with sugar, colouring matters, flavouring ethers, &c.

Uses.—The great use of alcohol, in its various states of mixture, is, and has been from time immemorial, as a *beverage*. There cannot be a doubt that alcoholic liquors

Digitized by Google

are beneficial to most healthy persons, when *moderately* enjoyed; and the man who advocates their rational *use* cannot be held answerable for their *abuse*.

Absolute alcohol (or strong spirits) acts locally as an irritant, contracting the tissues; but its effects on the organism, when taken internally, arises from its action, by the nerves, on the brain. Dr. Pereira has graphically described three stages of their effects:—

1. First or mildest degree - Excitement.
2. Second degree - - - Intoxication, or drunkenness.
3. Third degree - - - Coma, or true apoplexy.

These effects are tolerably familiar, and for a more minute description of them we must refer to Dr. Pereira* and other medical authors.

The important applications of alcohol in the arts, as a solvent for resins, &c., have been before alluded to. To the chemist it is a most valuable agent of separation. By its means he is enabled, in complicated organic mixtures, to separate those substances which are soluble from those which are insoluble in this menstruum. It may likewise be employed for separating certain salts—*e.g.* the chloride of strontium from that of barium, &c. &c.

From it are also manufactured ether, chloroform, and, indirectly, acetic acid; and in pharmacy, sweet spirits of nitre, the various tinctures, &c. &c.

Computed Real Value of the Spirituous Liquors Imported and Exported during each of the last Five Years.

	1860.	1861.	1862.	1863.	1864.
IMPORTED.					
Spirits:	£	£	£	£	£
Rum - -	757,981	790,010	660,920	581,039	489,172
Brandy	1,088,177	930,538	1,031,182	1,124,824	1,505,382
Other Foreign and Colonial spirits -	219,969	93,475	76,087	122,741	280,495
WINE - -	4,200,929	3,862,233	3,649,067	4,497,343	5,002,884
EXPORTED.					
Spirits:					
Rum - -	237,805	219,590	240,691	195,398	185,294
Brandy - -	281,246	236,163	302,229	308,574	229,725
Other Foreign and Colonial spirits -	152,166	236,400	107,955	113,671	267,408
WINE - -	760,730	672,863	646,808	737,527	675,989

Quantities of Spirits charged with Duties of Excise in the United Kingdom, Free of Duty, Exported, and retained for Home Consumption.

	Charged with Duty.	Free of Duty.†	Exported on Drawback or Free of Duty.	Retained for Home Consumption.	British Spirits Exported.
	Gallons.	Gallons.	Gallons.	Gallons.	Gallons.
1860	21,873,369	1,907,200	2,376,481	21,404,088	2,058,269
1861	20,045,159	4,452,724	4,799,091	19,698,792	4,085,617
1862	19,700,250	4,102,454	4,674,420	19,128,284	3,751,742
1863	19,949,663	3,689,965	4,256,596	19,383,032	4,076,357
1864	21,039,582	5,041,714	5,585,196	20,496,100	4,199,304

* Pereira, Materia Medica, vol. ii. p. 1948.

† On the 14th of August, 1855, spirits were allowed to be distilled free of duty for exportation.

Digitized by Google

Quantities of Alcoholic Liquors Imported, Exported, and retained for Home Consumption during each of the following Years.

	1850.	1851.	1852.	1853.	1854.	1855.	1856.	1857.	1858.	1859.	1860.	1861.	1862.	1863.	1864.
IMPORTED.	Gallons.	Gallons.	Gallons.	Gallons.	Gallons.	Gallons.	Gallons.	Gallons.	Gallons.	Gallons.	Gallons.	Gallons.	Gallons.	Gallons.	Gallons.
Spirits:															
Rum - - -	4,194,683	4,745,244	5,490,224	4,206,248	8,625,907	8,714,337	7,169,163	6,515,683	7,311,219	7,078,586	7,319,673	8,114,823	7,765,099	7,194,739	5,499,894
Brandy - - -	3,237,464	2,930,967	2,959,452	5,005,911	2,963,027	1,943,908	2,540,807	2,899,952	1,064,663	4,030,175	2,342,543	2,097,934	2,375,835	3,132,744	4,907,770
Geneva* - - -	337,015	158,679	135,356	268,520	184,137	219,041	195,925	} 1,083,568	1,245,106	1,461,986	1,802,243	666,245	417,481	867,863	1,328,766
Other Foreign and Colonial spirits -	383,610	140,092	34,573	146,420	175,725	96,747	120,264								
WINE - - -	9,304,312	9,008,151	6,793,304	11,029,568	10,875,858	8,946,766	9,474,694	10,336,845	5,791,636	8,195,513	12,475,011	11,052,436	11,960,676	14,186,139	15,451,622
EXPORTED.															
Spirits:															
Rum - - -	1,187,095	1,310,737	2,190,997	2,022,786	3,103,333	3,209,004	3,916,443	2,480,822	2,257,506	1,920,594	2,428,882	2,337,689	2,699,100	2,447,721	2,132,231
Brandy - - -	877,606	938,280	1,225,074	2,378,770	1,113,596	910,423	1,539,075	1,047,763	671,474	1,054,188	608,100	534,708	697,454	861,137	750,121
Geneva and other Foreign and Colonial spirits -	260,510	111,023	219,150	211,772	131,965	176,418	155,941	1,013,255	1,317,742	1,760,226	1,512,157	1,484,098	913,912	912,703	1,699,693
WINE - - -	1,745,718	1,681,402	1,802,017	2,467,545	2,101,060	1,883,757	2,373,581	2,041,804	2,322,735	2,132,738	2,275,206	1,923,255	2,110,652	2,300,802	2,085,281
RETAINED FOR HOME CONSUMPTION.															
Spirits:															
Rum - - -	2,902,064	2,860,425	2,899,684	3,232,457	3,226,594	3,223,575	3,423,396	3,396,537	3,427,639	3,575,199	3,728,801	3,451 384	3,319,754	3,419,000	3,726,621
Brandy - - -	1,860,809	1,859,273	1,924,295	1,969,843	1,862,189	1,525,578	1,533,513	1,299,615	1,107,298	1,305,969	1,461,552	1,598,270	1,698,399	1,914,417	2,312,270
Geneva and other Foreign and Colonial spirits -	28,237	26,397	26,231	27,958	25,690	25,181	27,226	45,824	47,976	51,540	331,570	143,416	175,489	240,814	256,235
WINE - - -	6,137,222	6,279,759	6,346,061	6,813,830	6,776,086	6,296,439	7,003,676	6,601,690	6,268,685	6,775,992	6,718,585	10,693,071	9,764,155	10,422,105	11,397,948

* Geneva not separated in the Statistical Abstract for the United Kingdom after 1856.

Digitized by Google

These numbers show the alterations which are taking place in the spirit-trading and spirit-drinking tendencies of the people of this country. In 1854 (see Tables in last edition) the value of the spirits imported was 2,791,047*l.*; while in 1863 it had fallen to 1,828,604*l.*, and in 1864 it was 2,275,049*l.* At the same time we find that the value of the wine imported in 1854 was 3,616,369*l.*; while in 1863 it was 4,497,343*l.*, and in 1864 5,002,884*l.* From this we may infer that a real improvement is taking place in the social condition of the people. It must not be forgotten that this statement does not include beer, which is the staple beverage of a very large portion of the community; and the increase in the consumption of malt liquors is only keeping pace with the increase of population.

The following are the quantities of spirits charged with duties of excise in each of the years named:—

	Gallons.		Gallons.		Gallons.
1842 -	18,841,890	1850 -	23,919,432	1858 -	23,686,751
1844 -	20,608,525	1852 -	25,270,262	1860 -	21,873,369
1846 -	24,106,697	1854 -	26,148,511	1862 -	19,700,250
1848 -	22,234,379	1856 -	23,922,453	1864 -	21,039,582

Every English distiller has now to pay a licence-duty of ten guineas before he can lawfully conduct operations, and afterwards a duty of 7*s.* 10*d.* per imperial gallon of spirits, proof strength, which he produces.

The Scotch and Irish distillers had to pay the same licence-fee as the English; and in addition to this, the Scotch distiller paid a duty of 4*s.* 8*d.* per imperial gallon of proof strength, and the Irish a duty of 3*s.* 4*d.*; but the duties are now equalised.

ALCOHOL RADICALS. The organic radicals containing hydrogen and carbon, which, when they replace half the hydrogen in a molecule of water, form alcohols. Ethyl and methyl are the best known. See METHYLATED SPIRIT.

ALDEHYDE. By this word is understood the fluid obtained from alcohol by the removal of two equivalents of hydrogen. Thus, alcohol being represented by the formula $C^4 H^6 O^2$, aldehyde becomes $C^4 H^4 O^2$. See LAMPIC ACID.

Preparation.—Aldehyde is prepared by various processes of oxidation. Liebig has published several methods, of which the following is perhaps the best. Three parts of peroxide of manganese, three of sulphuric acid, two of water, and two of alcohol of 80 per cent., are well mixed and carefully distilled in a spacious retort. The extreme volatility of aldehyde renders good condensation absolutely necessary. The contents of the retort are to be distilled over a gentle and manageable fire until frothing commences, or the distillate becomes acid. This generally takes place when about one-third has passed over. The fluid in the receiver is to have about its own weight of chloride of calcium added, and, after slight digestion, is to be carefully distilled on the water-bath. The distillate is again to be treated in the same way. By these processes a fluid will be obtained entirely free from water, but containing several impurities. To obtain the aldehyde in a state of purity it is, necessary, in the first place, to obtain aldehyde-ammonia; this may be accomplished in the the following manner:—The last distillate is to be mixed in a flask with twice its volume of ether, and, the flask being placed in a vessel surrounded by a freezing mixture, dry ammoniacal gas is passed in until the fluid is saturated. In a short time crystals of the compound sought separate in considerable quantity. The aldehyde-ammonia, being collected on a filter, or in the neck of a funnel, is to be washed with ether, and dried by pressure between folds of filtering paper, followed by exposure to the air. It now becomes necessary to obtain the pure aldehyde from the compound with ammonia. For this purpose two parts are to be dissolved in an equal quantity of water, and three parts of sulphuric acid, mixed with four of water, are to be added. The whole is to be distilled on the water-bath, the temperature, at first, being very low, and the operation being stopped as soon as the water boils. The distillate is to be placed in a retort connected with a good condensing apparatus, and, as soon as all the joints are known to be tight, chloride of calcium, in fragments, is to be added. The heat arising from the hydration of the chloride causes the distillation to commence, but it is carried on by a water-bath. The distillate, after one more rectification over chloride of calcium, at a temperature not exceeding 80° F., will consist of pure aldehyde. Aldehyde is a colourless, very volatile, and mobile fluid, having the density 0·800 at 32°. It boils, under ordinary atmospheric pressure, at 70° F. Its vapour density is 1·532. Its formula corresponds to four volumes of vapour; we consequently obtain the theoretical vapour density by multiplying its atomic weight = 44 by half the density of hydrogen, or ·0346. The number thus found is 1·5224, corresponding as nearly as could be desired to the experimental result.

Aldehyde is produced in a great number of processes, particularly during the destructive distillation of various organic matters, and in processes of oxidation. From

Digitized by Google

alcohol aldehyde may be procured by oxidation with platinum black, nitric acid, chromic acid, chlorine (in presence of water), or, as we have seen, a mixture of peroxide of manganese and sulphuric acid. Certain oils, by destructive distillation, yield it. Wood vinegar in the crude state contains aldehyde as well as wood spirit. Lactic acid, when in a combination with weak bases, yields it on destructive distillation. Various animal and vegetable products afford aldehyde by distillation with oxydising agents, such as sulphuric acid and peroxide of manganese, or bichromate of potash.

The word aldehyde, like that of alcohol, is gradually becoming used in a much more extended sense than it was formerly. By the term is now understood any organic substance which, by assimilating two equivalents of hydrogen, yields a substance having the properties of an alcohol, or, by taking up two equivalents of oxygen, yields an acid. It is this latter property which has induced certain chemists to say that there is the same relation between an aldehyde and its acid as between inorganic acids ending in *ous* and *ic*. Several very interesting and important substances are now known to belong to the class of aldehydes. The essential oils are, in several instances, composed principally of bodies having the properties of aldehydes. Among the most prominent may be mentioned the oils of bitter almonds, cumin, cinnamon, rue, &c. An exceedingly important character of the aldehydes is their strong tendency to combine with the bisulphites of ammonia, potash, and soda. By availing ourselves of this property, it becomes easy to separate bodies of this class from complex mixtures, and, consequently, enable a proximate analysis to be made. Now that the character of the aldehydes is becoming better understood, the chances of artficially producing the essential oils above alluded to in the commercial scale become greatly increased. Several have already been formed, and, although in very small quantities, the success has been sufficient to warrant sanguine hopes of success. A substitute for one of them has been for some years known under the very incorrect name of artificial oil of bitter almonds. See NITROBENZOLE. — C. G. W

ALANINE. (C^6 H^7 NO^4.) A peculiar substance, produced when aldehyde-ammonia is acted on by hydrocyanic and hydrochloric acids.

ALCIDÆ. A family of sea-birds, to which the Guillemots and Penguins belong. The Patagonian Penguin is larger than a goose, slate-coloured on the back, and white with a black mark on the breast, encircled by a citron-yellow cravat. The plumage is very close, and the breast is used as tippets and for trimming ladies' dresses.

ALDER. (*Aune*, Fr.; *Erle*, Germ.; *Alnus glutinosa*, Lin.) A tree, different species of which are indigenous to Europe, Asia, and America. The common alder seldom grows to a height of more than 40 feet. The wood is stated to be very durable under water. The piles at Venice, and those of Old London Bridge, are stated to have been of alder; and it was much used for pipes, pumps, and sluices. The charcoal of this wood is used for gunpowder.

ALE. The fermented infusion of pale malted barley, combined with infusion of hops. See BEER.

ALEMBIC, a Still. See DISTILLATION. The term is, however, applied to a still of peculiar construction, in which the *head*, or *capital*, is a separate piece, fitted and ground to the neck of the boiler, or cucurbit, or otherwise carefully united with a lute. The alembic has this advantage over the common retort, that the residue of distillation may be easily cleared out of the body. It is likewise capable, when skilfully managed, of distilling a much larger quantity of liquor in a given time than a retort of equal capacity. In France the term alembic, or rather *alambic*, is used to designate a glass still.

21

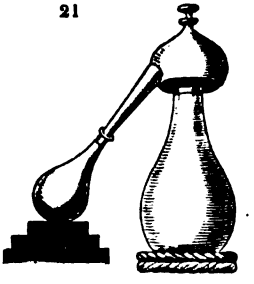

ALEMBROTH, SALT OF. The *salt of wisdom* of the alchemists; a compound of bichloride of mercury and sal ammoniac. If two atoms of bichloride of mercury are mixed with one atom of sal ammoniac and eight atoms of water, at 140° this mixture is fluid, but the salt of alembroth (*sal alembroth*) crystallises on cooling. It is composed of chloride of mercury and chloride of ammonium (NH^4ClH^8ClHO).

ALENÇON LACE. A French lace, of which it is one of the richest, finest, strongest, and most expensive. It has a six-sided mesh of two threads wove with pure hand-spun linen thread. See LACE.

ALGAROTH, POWDER OF. *Powder of Algarotti,—English Powder.* This salt was discovered by Algarotti, a physician of Verona. Chloride of antimony is formed by boiling black sulphide of antimony with hydrochloric acid: on pouring the solution into water, a white flocky precipitate falls, which is an oxychloride of antimony. If the water be hot, the precipitate is distinctly crystalline; this is the powder of algaroth. This oxychloride is used to furnish oxide of antimony in the preparation of tartar emetic.

Digitized by Google

ALGAROVILLA. This substance is called by the Spaniards *Algaroba*, from the resemblance it bears to the fruit of the Carob (*Ceratonia siliqua*), which is a native of Europe, in the southern countries of Spain and Portugal. It is the fruit of a tree which grows in Chili, of which the botanical name is *Prosopis pallida*, according to Captain Bagnald, R.N., who first brought a sample of it to this country in the year 1832. It consists of pods bruised and agglutinated more or less with the extractive exudation of the seeds and husks. According to a more recent determination, algarovilla is said to be the product of the tree Juga Marthæ of Santa Martha, a province of New Carthagena.

It is an astringent substance replete with tannin, capable, by its infusion in water, of tanning leather, for which purpose it possesses more than four times the power of good oak-bark. Its active matter is very soluble in water at a boiling temperature. The seeds are merely nutritive and demulcent, but contain no astringent property. This resides in the husks. The seeds in the entire pod constitute about one-fifth of the weight, and they are three or four in number in each oblong pod. Alcohol of 60 per cent. over proof dissolves 64 parts in 100 of this substance. The solution consists chiefly of tannin, with a very little resinous matter. Water dissolves somewhat more of it, and affords a very styptic-tasted solution, which precipitates solution of isinglass very copiously, like infusion of galls and catechu. Its solution forms with sulphate of iron a black precipitate.

ALGÆ. (*Varech*, Fr.; *Seegras*, or *Alge*, Germ.) A tribe of subaqueous plants, including the seaweeds (*fucus*) and the lavers (*ulva*) growing in salt water, and the fresh-water confervas. We have only to deal with those seaweeds which are of any commercial value. These belong to the great division of the *jointless algæ*, of which 160 species are known as natives of the British Isles. In the manufacture of Kelp (See KELP), all the varieties of this division may be used. The edible sorts, such as the birds' nests of the Eastern Archipelago, those which we consume in this country, as *lavers*, carrageen, or Irish moss, &c., belong to the same group, as do also those which the agriculturalists employ for manure.

Dr. Pereira gives the following list of esculent seaweeds.

Rhodomenia palmata (or Dulse).	*Iridæa edulis.*
Rhodomenia ciliata.	*Alaria esculenta*
Laminaria saccharina.	*Ulva latissima.*

Rhodomenia palmata passes under a variety of names, dulse, dylish, or dellish, and amongst the Highlanders it is called *dulling*, or waterleaf. It is employed as food by the poor of many nations; when well washed, it is chewed by the peasantry of Ireland without being dressed. It is nutritious, but sudorific, has the smell of violets, imparts a mucilaginous feel to the mouth, leaving a slightly acrid taste. In Iceland the dulse is thoroughly washed in fresh water and dried in the air. When thus treated it becomes covered with a white powdery substance, which is sweet and palatable; this is *mannite* (see MANNA), which Dr. Stenhouse proposes to obtain from seaweeds. "In the dried state it is used in Iceland with fish and butter, or else, by the higher classes: boiled in milk with the addition of rye flour. It is preserved packed in close casks, a fermented liquor is produced in Kamschatka from this seaweed, and in the North of Europe and in the Grecian Archipelago cattle are fed upon it."—*Stenhouse.*

Laminaria saccharina yields 12·15 per cent. of mannite, while the *Rhodomenia palmata* contains not more than 2 or 3 per cent.

Iridæa edulis.—The fronds of this weed are of a dull purple colour, flat, and succulent. It is employed as food by fishermen, either raw or pinched between hot irons, and its taste is then said to resemble roasted oysters.

Alaria esculenta.—Mr. Drummond informs us that, on the coast of Antrim, "it is often gathered for eating, but the part used is the leaflets, and not the midrib, as is commonly stated. These have a very pleasant taste and flavour, but soon cover the mouth with a tenacious greenish crust, which causes a sensation somewhat like that of the fat of a heart or kidney."

Ulva latissima (Broad green laver).—This is rarely used, being considered inferior to the *Porphyra laciniata* (Laciniated purple laver). This alga is abundant on all our shores. It is pickled with salt, and sold in England as *laver*, in Ireland as *sloke*, and in Scotland as *slaak*. The London shops are mostly supplied with laver from the coasts of Devonshire. When stewed, it is brought to the table and eaten with pepper, butter or oil, and lemon-juice or vinegar. Some persons stew it with leeks and onions. The pepper dulse (*Laurencia pinnatifida*), distinguished for its pungent taste, is often used as a condiment when other seaweeds are eaten. "Tangle" (*Laminaria digitata*), so called in Scotland, is termed "red-ware" in the Orkneys, "sea-wand" in the Highlands, and "sea-girdles" in England. The flat leathery fronds of this weed, when young, are

Digitized by Google

employed as food. Mr. Simmonds tells us, "There was a time when the cry of 'Buy dulse and tangle' was as common in the streets of Edinburgh and Glasgow, as is that of 'water-cresses' now in our metropolis."—*Society of Arts' Journal.*

Laminaria potatorum. — The large sea tangle is used abundantly by the inhabitants of the Straits of Magellan and by the Fuegians. Under the name of "Bull Kelp" it is used as food in New Zealand and Van Diemen's Land. It is stated to be exceedingly nutritive and fattening.

Chondrus crispus (chondrus, from χόνδρος, cartilage).—Carrageen, Irish, or pearl moss. For purposes of diet and for medicinal uses, this alga is collected on the west coast of Ireland, washed, bleached by exposure to the sun, and dried. It is not unfrequently used in Ireland by painters and plasterers as a substitute for size. It has also been successfully applied, instead of isinglass, in making of blanc-mange and jellies; and in addition to its use in medicine, for which purpose it was introduced by Dr. Todhunter, of Dublin, about 1831, a thick mucilage of carrageen, scented with some prepared spirit, is sold as *bandoline, fixature,* or *clysphitique,* and it is employed for stiffening silks. According to Dr. Davy, carrageen consists of

Gummy matter	28·5
Gelatinous matter	49·0
Insoluble matter	22·5
	100·0

The following results, obtained by Dr. Apjohn and Dr. Davy, show, in a satisfactory manner, the value of the algæ. The amount of water is less than that which belongs to the algæ when fresh from the sea, all these having undergone a partial drying in the progress of carriage from the coast:—

Specimens supplied by Dr. Davy, and dried at 212° —

	Nitrogen per cent.
Chondrus crispus, bleached	2·152
Fucus vesiculosus	2·397
Rhodomenia palmata (Dylisk)	3·776

Kinds of Algæ.	Water.	Dry Matter.	Per Cent. of Nitrogen in Dry Matter.	Protein contained in Dry Matter.
Chondrus crispus, bleached	17·92	82·08	1·534	9·587
Chondrus crispus, unbleached, Ballycastle	21·47	78·53	2·142	13·387
Gigartina mammillosa, Ballycastle	21·55	78·45	2·198	13·737
Chondrus crispus, bleached (2nd experiment)	19·79	80·21	1·485	9·281
Chondrus crispus, unbleached, Ballycastle, (2nd experiment)	19·96	80·04	2·510	15·687
Laminaria digitata, or Dulse tangle, Ballycastle	21·38	78·62	1·588	9·925
Laminaria digitata, or Black tangle, Ballycastle	31·05	68·95	1·396	8·725
Rhodomenia palmata, or Dylisk, Ballycastle	16·56	83·44	3·465	21·656
Porphyra laciniata, Ballycastle	17·41	82·59	4·650	29·062
Iridæa edulis, Ballycastle	19·61	80·39	3·088	19·300
Alaria esculenta, or Murlins, Ballycastle	17·91	82·09	2·424	15·150
Mean composition of these Algæ	20·42	79·58	2·407	15·045

The quantity of nitrogen contained in some of these plants is remarkably large, and will, of course, with the proteinaceous substances detected in all the Algæ, account for the high nutritive value ascribed to them.

Plocaria candida.—Ceylon moss; Edible moss. This moss is exported from the islands of the Indian Archipelago, forming a portion of the cargoes of nearly all the junks. It is stated by Mr. Crawford, in his "History of the Indian Archipelago," that on the spots where it is collected, the prices seldom exceed from 5*s.* 8*d.* to 7*s.* 6*d.* per cwt. The Chinese use it in the form of a jelly with sugar, as a sweatmeat, and apply it in the arts as an excellent paste. The gummy matter which they employ for covering lanterns, varnishing paper, &c., is made chiefly from this moss.

Digitized by Google

As ordinarily sold in Ceylon, it appears to consist of several varieties of marine productions, with the *Plocaria* intermixed.

The *Agar-Agar* of Malacca belongs to this variety; and probably seaweeds of this character are used by the Salangana or esculent swallow in constructing their nests, which are esteemed so great a delicacy by the Chinese. The plant is found on the rocks of Pulo Ticoos and on the shores of the neighbouring islands. It is blanched in the sun for two days, or until it is quite white. It is obtained on submerged banks in the neighbourhood of Macassar, Celebes, by the Bajow-laut, or sea-gipsies, who send it to China. It is also collected on the reefs and rocky submerged ledges in the neighbourhood of Singapore. Mr. Montgomery Martin informs us that Agar-Agar produces in China from six to eight dollars per peeul in its dry and bulky state. From 6,000 to 12,000 peculs are produced annually, the pecul being equal to 100 catties of 1·333 lbs. each.

Similar to this, perhaps the same in character, is the *Agal-Agal*, another species of seaweed. It dissolves into a glutinous substance, and its principal use is for gumming silks and paper, as nothing equals it for paste, nor is it liable to be eaten by insects. The Chinese make a beautiful kind of lantern formed of netted thread washed over with this gum, and which is extremely light and transparent.

Dr. Macgowan, of Ningpo, forwarded to the Society of Arts, through Sir John Bowring, the following algæ, which he thus names and describes:—

Tan-shwin grass, so named from the place, on the coast of Formosa, whence it is procured. It is used for making *yang-tsai* (ocean-vegetable).

Nin-mau (ox-hair) grass. Made into an iced jelly, and sold in the streets, in hot weather, sugared.

Hâi-tâi (sea-tape). Sent into the interior, wherever fossil coal is used. It is considered corrective of the deleterious exhalations of that fuel. It is usually boiled with pork. This kind comes from Shantung province.

Tsz-tsai (purple vegetable). Often eaten as it is, to give a relish to rice, or cooked.

Fah-tsai (hair vegetable). Boiled, either with animal or vegetable articles, forms a broth. Also the gills eaten with sugar.

Ki-tsai (hen-foot vegetable). Cooked with soy or vinegar. Used by women to make the hair glossy, and to strengthen it.

Sea-tape, from Japan. It is preferred to the former. — *Society of Arts' Journal.*

ALIMENT. (*Alimentum*, from *alo*, to feed.) The food necessary for the human body, and capable of maintaining it in a state of health.

1. Nitrogenous substances are required to deposit, from the blood, the organised tissue and solid muscle;

2. And carbonaceous, non-nitrogenous bodies, to aid in the processes of respiration, and in the supply of carbonaceous elements, as fat, &c., for the due support of animal heat.

For information on these substances, consult Liebig's "Animal Chemistry," the investigations of Dr. Lyon Playfair, and Dr. Robert Dundas Thompson's "Experimental Researches on Food," 1846. See FOOD.

ALIZARINE. See MADDER.

ALKALI. A term derived from the Arabians, and introduced into Europe when the Mahometan conquerors pushed their conquests westward. Al, el, or ul, as an Arabic noun, denotes "God—Heaven—Divine." As an Arabic particle, it is prefixed to words to give them a more emphatic signification, much the same as our particle *the*; as in *Alcoran*, the Koran, *alchymist*, the chemist.

Kali was the old name for the plant producing potash (the glasswort, so called from its use in the manufacture of glass), and *alkali* signified no more than the kali plant. Potash and soda were for some time confounded together, and were hence called alkalis. Ammonia, which much resembles them when dissolved in water, was also called an alkali. Ammonia was subsequently distinguished as the *volatile alkali*, potash and soda being called *fixed alkalis*. Ammonia was also called the animal alkali; soda was the mineral alkali, being derived from rock-salt, or from the ocean; and potash received the name of vegetable alkali, from its source being the ashes of plants growing upon the land. Alkalis are characterised by being very soluble in water, by neutralising the strongest acids, by turning to brown the vegetable yellows, and to green the vegetable reds and blues.

Some chemists classify all salifiable bases under this name.

In commercial language, the term has been hitherto applied to an impure soda, but now it is understood to comprehend both soda and potash. The imports and exports of the alkalis are given on the opposite page. See POTASH and SODA.

Digitized by Google

Imports.

	1860.	1861.	1862.	1863.
Barilla.	Cwts.	Cwts.	Cwts.	Cwts.
From Canary Islands	- -	13,173	9,069	2,585
Italy—Sicily	604	5,204	8,308	8,665
Other parts	12	604	1,277	1,016
	616	18,981	18,654	12,266
Pearl and Potashes.				
From Russia	- -	2,430		
United States	- -	20,261	39,770	42,362
British North America	- -	105,369	121,066	133,301
Other parts	- -	988	277	671
		129,048	161,113	176,334
Other Sorts unenumerated.				
From Hamburg	- -	605	- -	8,814
Bremen	- -	783		
France	- -	3,710	- -	1,979
Belgium	- -	- -	110	
British North America	- -	- -	21	
Peru	- -	821		
Other parts	- -	1,024	44	109
		6,953	175	10,902

Soda Exports.—Year 1863.

	Caustic Soda, Soda Ash, and Refined Alkali.	Crystals of Soda.	Bicarbonate of Soda.		Caustic Soda, Soda Ash, and Refined Alkali.	Crystals of Soda.	Bicarbonate of Soda.
	Cwts.	Cwts.	Cwts.		Cwts.	Cwts.	Cwts.
To Russia	150,139			Brought forward	653,605	324,813	284
Sweden	14,176	14,356		To Turkey Proper	13,415		
Denmark	16,685	25,777		United States:			
Prussia	88,830	7,996		N. Atlantic Ports	671,571	64,537	98,968
Oldenburg	9,662			S. Atlantic Ports	9,843	- -	970
Hamburg	55,144	42,605		Pacific Ports	5,093	3,490	880
Holland	56,186	111,371		Brazil	31,079		
Belgium	62,745	21,618		Argentine Confederation	9,873		
France	68,963	101,090	284	Chili	9,245		
Portugal, Azores, and Madeira	18,553			Australia	19,496	11,935	4,839
Spain and the Canaries	41,922			British North America	26,123	- -	8,566
Austrian Territories	50,922			Bahamas	- -	- -	13,201
Greece	19,678			Other Countries	68,590	77,903	8,694
Carried forward	653,605	324,813	284	Total	1,517,933	482,678	136,402

The total exportation of soda of British manufacture in 1863 being 2,137,015 cwts.

ALKALI, ORGANIC, or ALKALOID. During the last few years the organic alkaloids has so greatly increased, that a considerable volume might be devoted to their history. There are, however, only a few which have become articles of commerce. The modes of preparation will be given under the heads of the alkalis themselves. The principal sources from whence they are obtained are the following:—1. The animal kingdom. 2. The vegetable kingdom. 3. Destructive distillation. 4. The action of potash on the cyanic and cyanuric ethers. 5. The action of ammonia on the iodides, &c., of the alcohol radicals. 6. The action of reducing agents on nitro-compounds. The principal bases existing in the animal kingdom are creatine and sarcosine. The vegetable kingdom is much richer in them, and yields a great number of organic alkalis, of which several are of extreme value in medicine. Modern chemists regard all organic alkalis as derived from the types ammonia or oxide of ammonium. Their study has led to results of the most startling character. It has been found that not only may the hydrogen in ammonia and oxide of ammonium be replaced by metals and compound radicals without destruction of the alkaline character, but even the nitrogen may be replaced by phosphorus or arsenic, and yet the resulting compounds remain powerfully basic. In studying the organic bases, chemists have constantly had in view the artificial production of the bases of cinchona bark. It is true that this result has not as yet been attained; but, on the other hand, bodies have been formed having so many analogies, both in constitution and properties, with the substances sought, that it cannot be doubted the question is merely one

Digitized by Google

of time. The part performed by the bases existing in the juice of flesh has not been ascertained, and no special remedial virtues have been detected in them; but this is not the case with those found in vegetables; it is, in fact, among them that the most potent of all medicines are found — such, for example, as quinine and morphia. It is, moreover, among vegetable alkaloids that we find the substances most inimical to life, for aconitine, atropine, brucine, coniine, curarine, nicotine, solanine, strychnine, &c. &c., are among their number. It must not be forgotten, however, that, used with proper precaution, even the most virulent are valuable medicines. The fearfully poisonous nature of some of the organic bases, together with an idea that they are difficult to detect, has unhappily led to their use by the poisoner; strychnine, especially, has acquired a painful notoriety, in consequence of its employment by a medical man to destroy persons whose lives he had insured. Fortunately for society, the skill of the analyst has more than kept pace with that of the poisoner; and without regarding the extravagant assertions made by some chemists as to the minute quantities of vegetable poisons they are able to detect, it may safely be asserted that it would be very difficult to administer a fatal dose of any ordinary vegetable poison without its being discovered. Another check upon the poisoner is found in the fact that those most difficult of isolation from complex mixtures are those which cause such distinct symptoms of poisoning in the victim, that the medical attendant, if moderately observant, can scarcely fail to have his suspicions aroused.

Under the heads of the various alkaloids will be found (where deemed of sufficient importance), not merely the mode of preparation, but also the easiest method of detection.—C. G. W.

ALKALIMETER. There are various kinds of alkalimeters, but it will be more convenient to explain their construction and use in the article on ALKALIMETRY, to which the reader is referred.

ALKALIMETRY. 1. The object of alkalimetry is to determine the quantity of caustic alkali or of carbonate of alkali contained in the potash or soda of commerce. The principle of the method is, as in acidimetry, based upon Dalton's law of chemical combining ratios — that is, on the fact that in order to produce a *complete reaction* a certain definite weight of reagent is required, or, in other words, in order to saturate or completely neutralise, for example, one equivalent of a base, exactly one equivalent of acid must be employed, and *vice versâ*. This having been thoroughly explained in the article on ACIDIMETRY, the reader is referred thereto.

2. The composition of the potash and of the soda met with in commerce presents very great variations; and the value of these substances being, of course, in proportion to the quantity of real alkali which they contain, an easy and rapid method of determining that quantity is obviously of the greatest importance both to the manufacturer and to the buyer. The process by which this object is attained, though originally contrived exclusively for the determination of the intrinsic value of these two alkalies (whence its name, Alkalimetry) has since been extended to that of ammonia and of earthy bases and their carbonates, as will be shown presently.

22

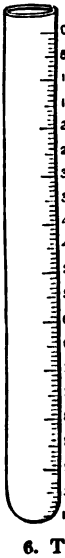

3. Before, however, entering into a description of the process itself, we will give that of the instrument employed in this method of analysis, which instrument is called an *alkalimeter*.

4. The common alkalimeter is a tube closed at one end (see figure in margin), of about $\frac{3}{4}$ths of an inch internal diameter, about $9\frac{1}{2}$ inches long, and is thus capable of containing 1000 grains of pure distilled water. The space occupied by the water is divided accurately into 100 divisions, numbering from above downwards, each of which, therefore, represents 10 grains of distilled water.

5. When this alkalimeter is used, the operator must carefully pour the acid from it by closing the tube with his thumb, so as to allow the acid to trickle in drops as occasion may require; and it is well also to smear the edge of the tube with tallow, in order to prevent any portion of the test acid from being wasted by running over the outside after pouring, which accident would, of course, render the analysis altogether inaccurate and worthless; and, for the same reason, after having once begun to pour the acid from the alkalimeter by allowing it to trickle between the thumb and the edge of the tube, as above mentioned, the thumb must not be removed from the tube till the end of the experiment, for otherwise the portion of acid which adheres to it would, of course, be wasted and vitiate the result. This uncomfortable precaution is obviated in the other forms of alkalimeter now to be described.

6. That represented in *fig.* 23 is Gay-Lussac's alkalimeter; it is a glass tube about 14 inches high, and $\frac{1}{4}$ an inch in diameter, capable of holding more than 1000 grains of distilled water; it is accurately graduated from the top downwards into 100

Digitized by Google

divisions, in such a way that each division may contain exactly 10 grains of water. It has a small tube, *b*, communicating with a larger one, which small tube is bent and bevelled at the top, *c*. This very ingenious instrument, known also under the names of "*burette*" and "*pouret*," was contrived by Gay-Lussac, and is by far more convenient than the common alkalimeter, as by it the test acid can be unerringly poured, drop by drop, as wanted. The only drawback is the fragility of the small side-tube, *b*, on which account the common alkalimeter, represented in *fig.* 22, is now generally used, especially by workmen, because as it has no side-tube it is less liable to be broken; but it gives less accurate results, a portion of the acid being wasted in various ways, and it is besides less manageable. Gay-Lussac's "burette" is therefore preferable; and if melted wax be run between the space of the large and of the small tube, the instrument is rendered much less liable to injury; it is generally sold with a separate wooden foot or socket, in which it may stand vertically.

23

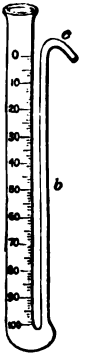

24

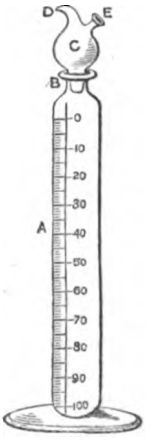

7. The following form of alkalimeter (*fig.* 24), which I contrived several years ago, will, I think, be found equally delicate but more convenient still than that of Gay-Lussac. It consists of a glass tube, A, of the same dimensions and graduated in the same manner as that of Gay-Lussac; but it is provided with a glass foot, and the upper part, B, is shaped like the neck of an ordinary glass bottle; C is a bulb blown from a glass tube, one end of which is ground to fit the neck, B, of the alkalimeter, like an ordinary glass stopper. This bulb is drawn to a capillary point at D, and has a somewhat large opening at E. With this instrument the acid is perfectly under the control of the operator, for the globular joint at the top enables him to see the liquor before it actually begins to drop out, and he can then regulate the pouring to the greatest nicety, whilst its more substantial form renders it much less liable to accidents than that of Gay-Lussac; the glass foot is extremely convenient, and is at the same time a great additional security. The manner of using it will be described further on.

8. Another alkalimeter of the same form as that which I have just described, except that it is all in one piece, and has no globular enlargement, is represented in *fig.* 25. Its construction is otherwise the same, and the results obtained are equally delicate; but it is less under perfect control, and the test acid is very liable to run down the tube outside: this defect might be easily remedied by drawing the tube into a finer and more delicate point, instead of in a thick blunted projection, from which the last drop cannot be detached, or only with difficulty and imperfectly. A glass foot would moreover be an improvement.

25

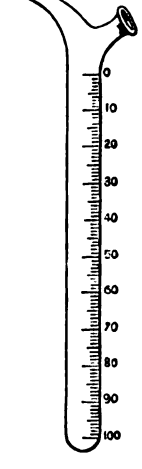

9. With Schüster's alkalimeter (represented in *fig.* 26), the strength of alkalis is determined by the *weight*, not by the *measure*, of the acid employed to neutralise the alkali: it is, as may be seen, a small bottle of thin glass having the form of the head of the alkalimeter represented in *fig.* 24. We shall describe further on the process of analysis with this alkalimeter.

10. There are several other forms of alkalimeter, but those which have been alluded to are almost exclusively used, and whichever of them is employed the process is the same—namely, pouring carefully an acid of a known strength into a known weight of the alkali under examination, until the neutralising point is obtained, as will be fully explained presently.

26

11. Blue litmus-paper being immediately reddened by acids is the reagent used for ascertaining the exact point of the neutralisation of the alkali to be tested. It is prepared by pulverising one part of commercial litmus, and digesting it in six parts of cold water, filtering, and dividing the blue liquid into two equal portions, adding carefully to one of the portions, and *one drop* at a time, as much very dilute sulphuric acid as is sufficient to impart to it a slight red colour, and pouring the portion so treated into the second portion, which is intensely blue, and stirring the whole together. The mixture so obtained is neutral,

Digitized by Google

and by immersing slips of white blotting-paper into it, and carefully drying them by hanging them on a stretched piece of thread, an exceedingly sensitive test paper of a light blue colour is obtained, which should be kept in a wide-mouth glass-stoppered bottle, and sheltered from the air and light.

12. Since the principle on which alkalimetry is based consists in determining the amount of acid which a known weight of alkali can saturate or neutralise, it is clear that any acid having this power can be employed.

13. The test acid, however, generally preferred for the purpose is sulphuric acid, because the normal solution of that acid is more easily prepared, is less liable to change its strength by keeping, and has a stronger reaction on litmus-paper than any other acid. It is true that other acids — tartaric acid, for example — can be procured of greater purity, and that as it is dry and not caustic, the quantities required can be more comfortably and accurately weighed off; and on this account some chemists, after Buchner, recommended its use, but the facility with which its aqueous solution becomes mouldy is so serious a drawback, that it is hardly ever resorted to for that object.

14. When sulphuric acid is employed, the *pure* acid in the maximum state of concentration, or, as it is called by chemists, the *pure* hydrate of sulphuric acid, specific gravity 1·8485, is preferable. Such an acid, however, is never met with in commerce, for the ordinary English oil of vitriol is seldom pure, and never to the maximum state of concentration; the operator, however, may prepare it by distilling ordinary oil of vitriol, but as the specific caloric of the vapour of sulphuric acid is very small, the distillation is a somewhat hazardous operation, unless peculiar precaution be taken. The following apparatus, however, allows of the acid being distilled in a perfectly safe and convenient manner; it consists of a plain glass retort, charged with oil of vitriol, a little protosulphate of iron is added, for the purpose of destroying any nitrous products which the acid may evolve, and it is then placed into a cylinder of iron, the bottom of which is perforated with holes about three quarters of an inch in diameter, except in the middle, where a large hole is cut of a suitable size for the retort to rest upon; the sides of the cylinder are likewise perforated, as represented in *fig.* 27. Ignited charcoal is then placed all round the retort, the bottom of which protruding out of the influence of the heat, allows the ebullition to proceed from the sides only. It is well to put into the retort a few fragments of quartz or a few lengths of platinum wire, the effect of which is to render the ebullition more regular

27

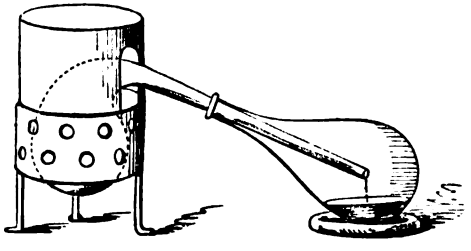

15. In order to prevent the acid fumes from condensing in the neck of the retort, it should be covered with a cover of sheet iron, as represented in *fig.* 27.

16. The first fourth part which distils over should be rejected, because it is too weak; the next two fourths are kept, and the operation is then stopped, leaving the last fourth part of the acid in the retort. The neck of the retort should be about four feet long and about one and a half inches in the bore, and be connected with a large receiver; and as the necks of retorts are generally much too short for the purpose, an adapter tube should be adjusted to it and to the receiver, but very loosely; this precaution is absolutely necessary, for otherwise the hot acid falling on the sides of the receiver would crack it; things, in fact, should be so arranged that the hot drops of the distilling acid may fall into the acid which has already distilled over. Do not surround the receiver with cold water, for the hot acid dropping on the refrigerated surface would also certainly crack it. The acid so obtained is pure oil of vitriol, or monohydrated sulphuric acid, SO^3, HO, and it should be kept in a well stoppered and dry flask.

17. For commercial assays, however, and, indeed, for every purpose, the ordinary concentrated sulphuric acid answers very well: when used for the determination of the value of potashes, it is made of such a strength that each division (or 10 water-grains' measure) of the alkalimeter saturates exactly one grain of pure potash: an acid of that particular strength is prepared as follows: —

18. Take 112·76 grains of pure neutral and anhydrous carbonate of soda, and dissolve them in about 5 fluid ounces of hot water.* This quantity, namely, 112·76

* Anhydrous, or dry, neutral carbonate of soda may be obtained by keeping a certain quantity of pure bicarbonate of soda for a short time, at a dull red heat, in a platinum crucible: the bicarbonate is converted into its neutral carbonate, of course free from water.

Digitized by Google

grains, of neutral carbonate of soda will exactly saturate the same quantity of pure sulphuric acid (SO^3) that 100 grains of pure potash would. It is advisable, however, to prepare at once a larger quantity of test solution of carbonate of soda, which is of course easily done, as will be shown presently.

19. Mix, now, 1 part, by measure, of concentrated sulphuric acid with 10 parts of water, or rather—as it is advisable, where alkalimetrical assays have frequently to be made, to keep a stock of test acid—mix 1000 water-grains' measure of concentrated sulphuric acid with 10,000 grains of water, or any other larger proportions of concentrated sulphuric acid and water, in the above respective proportions; stir the whole well, and allow it to cool. The mixture of the acid with the water should be made by first putting a certain quantity of the water into a glass beaker or matrass of a suitable size, then pouring the concentrated acid slowly therein, while a gyratory motion is imparted to the liquid. The vessel containing the acid is then rinsed with the water, and both the rinsing and the rest of the water are then added to the whole mass. When quite cold, fill the graduated alkalimeter with a portion of it up to the point marked 0°, taking the under line of the liquid as the true level; and, whilst stirring briskly with a glass rod the aqueous solution of the 112·76 grains of neutral carbonate of soda above alluded to, drop the test acid from the alkalimeter into the vortex produced by stirring, until, by testing the alkaline solution with a strip of reddened litmus-paper after every addition of acid, it is found that it no longer shows an alkaline reaction (which is known by the slip of reddened litmus-paper not being rendered blue), but, on the contrary, indicates that a very slight excess of acid is present (which is known by testing with a slip of blue litmus-paper, which will then turn slightly red).

20. If, after having exhausted the whole of the 100 divisions (1000 water-grains' measure) of the diluted acid in the alkalimeter, the neutralisation is found to be *exactly* attained, it is a proof that the test acid is right.

21. But suppose, on the contrary (and this is a much more probable case), suppose that only 80 divisions of the acid in the alkalimeter have been required to neutralise the alkaline solution, it is then a proof that the test acid is too strong, and accordingly it must be further diluted with water, to bring it to the standard strength; and this may at once be done, in the present instance, by adding 20 measures of water to every 80 measures of the acid. This is best accomplished by pouring the whole of the acid into a large glass cylinder, divided into 100 equal parts, until it reaches the mark or scratch corresponding to 80 measures; the rest of the glass, up to 100, is then filled up with water, so that the same quantity of real acid will now be in the 100 measures as was contained before in 80 measures.

22. The acid adjusted as just mentioned should be labelled "*Test Sulphuric Acid for Potash*," and kept in well-stoppered bottles, otherwise evaporation taking place would render the remaining bulk more concentrated, consequently richer in acid than it should be, and it would thus, of course, become valueless as a test acid until re-adjusted. Each degree or division of the alkalimeter of such an acid represents 1 grain of pure potash.

23. The alkalimetrical *assay of soda* is also made with sulphuric acid, in preference to other acids, but it must be so adjusted that 100 alkalimetrical divisions (1000 water-grains' measure) of acid will exactly neutralise 170·98 of pure anhydrous carbonate of soda, that quantity containing 100 grains of pure soda.

24. Dissolve, therefore, 171 grains of pure anhydrous neutral carbonate of soda, obtained as indicated before, in five or six ounces of hot water, and prepare in the meantime the test sulphuric acid, by mixing 1 part, by measure, of ordinary concentrated sulphuric acid, with about 9 parts by measure of water exactly as described before; stir the whole thoroughly, let the mixture stand until it has become quite cold, then pour 1000 water-grains' measure of the dilute acid so prepared into an alkalimeter—that is to say, fill that instrument up to 0°, taking the under line as the true level, and then, whilst stirring briskly the aqueous solution of the 171 grains of carbonate of soda with a glass rod, pour the acid, with increased precaution as the saturating point is approaching, into the vortex produced, until by testing the liquor alternately with reddened and with blue litmus-paper, or with grey litmus-paper, as before mentioned, the exactly neutralised point is hit.

25. If the whole of the 100 alkalimetrical divisions (1000 water-grains' measure) have been required to effect the neutralisation, it is a proof that the acid is of the right strength, but if this be not the case, it must be adjusted as described before—that is to say:—

26. Suppose, for example, that only 75 alkalimetrical divisions or measures of the acid in the alkalimeter have been required to neutralise the 171 grains of neutral carbonate of soda operated upon, then 75 measures of the acid should be poured at once into a glass cylinder accurately divided into 100 parts; the remaining 25 divisions

Digitized by Google

should then be filled with water, and the whole being now stirred up, 100 parts of the liquor will of course contain as much real acid as 75 parts contained before, and accordingly the acid may now be used as a test acid for the alkalimetrical assay of soda, each degree or division of the alkalimeter representing one grain of pure soda.

27. The stock of test acid should be kept in well-stoppered flasks, that it may not vary in strength by evaporation, and be labelled "*Test Sulphuric Acid for Soda.*"

28. Instead however of keeping two kinds of "test sulphuric acid," of different saturating powers as described, the one for *potash*, the other for *soda*, one kind only may be prepared so as to serve for both alkalis, by constructing, as is very often done, an alkalimeter adjusted so as to indicate the quantities of the acid of a given strength required for the saturation or neutralisation of both potash or soda, or of their respective carbonates; and this, in fact, is the alkalimeter most in use in the factory.

It should be in shape similar to that of Gay-Lussac's (see *fig.* 23), or that described in *figs.* 24 and 25; but, like that represented by *fig.* 22, it generally consists of a tube closed at one end, about three-fourths of an inch internal diameter and about 9½ inches in length; it is graduated into 100 equal parts, and every division is numbered from above downwards (*see fig.* 28).

The following directions for their construction are given by Professor Faraday. "Let the tube represented in the margin have 100° grains of water weighed into it; then let the space it occupies be graduated into 100 equal parts, and every ten divisions numbered from above downwards. At 22·1 parts, or 77·99 parts from the bottom, make an extra line, a little on one side or even on the opposite side of the graduation, and write at it with a scratching diamond, *soda*; lower down, at 48·62 parts, make another line, and write *potash*; still lower, at 54·43 parts, a third line marked *carb. soda*, and at 65 parts a fourth, marked *carb. potash*. It will be observed that portions are measured off beneath these marks in the inverse order of the equivalent number of these substances, and consequently directly proportionate to the quantities of any particular acid which will neutralise equal weights of the alkalis and their carbonates. As these points are of great importance, it will be proper to verify them by weighing into the tubes first 350, then 513·8, and lastly 779·9 grains of water, which will correspond with the marks if they are correct, or the graduation may be laid down from the surface of the four portions of fluid when weighed in, without reference to where they fall upon the general scale. The tube is now completed, except that it should be observed whether the aperture can be perfectly and securely covered by the thumb of the left hand, and if not, or if there be reason to think it not ultimately secure, then it should be heated and contracted until sufficiently small."

28

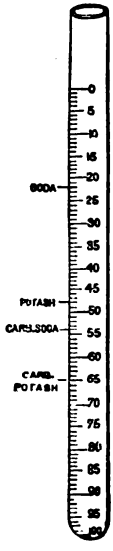

29. The test acid for this alkalimeter should have a specific gravity of 1·1268; and such an acid may be prepared by mixing one part, by weight, of sulphuric acid, specific gravity 1·82, with four parts of water, and allowing the mixture to cool. In the meantime, 100 grains of pure anhydrous carbonate of soda, obtained as indicated before, should be dissolved in water, and the test sulphuric acid, of specific gravity 1·1268, prepared as abovesaid, having become quite cold, is poured into the alkalimeter up to the point marked carbonate of soda, the remaining divisions are filled up with water, and the whole should be well mixed by shaking.

30. If the whole of the sulphuric acid, adjusted as was said, being poured carefully into the solution of the 100 grains of the neutral carbonate of soda, neutralise them exactly — which is ascertained, as usual, by testing the solution with litmus-paper, which should not be either reddened or rendered bluer by it — it is of course a sign that the test is as it should be—that is to say, is of the proper strength; in the contrary case it must be finally adjusted in the manner already indicated, and which need not be repeated. See §§ 20, 21.

31. The best and most convenient process for the analyst, however, consists in preparing a test acid of such a strength that it may serve not only for all alkalis, but indeed for every base; that is to say, by adjusting the test acid so that 100 alkalimetrical divisions of it (1000 water-grains' measure) may exactly saturate or neutralise one equivalent of every base. This method, which was first proposed by Dr. Ure, is exceedingly convenient, and the possession of two reciprocal test liquids, namely the ammonia test liquor of a standard strength, of which we gave a description in the article on Acidemetry, and the standard test acid of which we are now speaking, affords, as Dr. Ure observes, ready and rigid means of verification. For microscopic analysis of alkaline and of acid matter, a graduated tube of a small bore, mounted in a frame, with a valve apparatus at top, so as to let fall drops of any size

Digitized by Google

and at any interval, is desirable; and such an instrument Dr. Ure employed for many years; but instead of a tube with a valve apparatus at top, the operator may use a graduated tube of a small bore, terminated by a small length of vulcanised india-rubber tube pinched in a clamp, which may be relaxed in such a way as to permit also the escape of drops of any size at any interval of time, the little apparatus being under perfect command.

32. The test sulphuric acid, of such a strength that 100 alkalimetrical divisions of it can saturate one equivalent of every base, should have a specific gravity of 1·032, and is prepared as follows: —

Take 53 grains (one equivalent) of pure anhydrous neutral carbonate of soda, obtained in the manner indicated before (see § 18), and dissolve them in about one fluid ounce of water. Prepare, in the meantime, the test sulphuric acid by mixing one part, by measure, of concentrated sulphuric acid with about 11 or 12 parts of water, and stir the whole well. The mixture having become quite cold, fill the alkalimeter with the cold diluted acid up to the point marked 0°, taking the under line of the liquid as the true level, and, whilst stirring briskly the aqueous solution of the 53 grains of carbonate of soda above alluded to, pour the acid carefully from the alkalimeter into the vortex produced by stirring, until, by testing the liquor alternately with reddened and with blue litmus-paper, or, more conveniently still, with grey litmus-paper, the neutralising point is exactly hit.

33. If the whole of the 100 divisions of the alkalimeter had been required to neutralise exactly the 53 grains of pure anhydrous carbonate of soda, it would be a proof that the acid is of the right strength; but if this is not the case, it must be adjusted in the manner described before, that is to say: —

34. Let us suppose, for example, that only 50 measures in the alkalimeter have been required to saturate or neutralise the 53 grains of carbonate of soda, then 50 measures should be poured at once into a glass cylinder accurately divided into 100 parts, the remaining 50 divisions should be filled up with water, and the whole being well stirred, 100 parts of the acid liquor will now contain as much real acid as was contained before in the 50 parts.

35. The acid may now be labelled simply, "*Test or Normal Sulphuric Acid.*" Each one hundred alkalimetrical divisions, or 1000 water-grains' measure of it, contain one equivalent, or 40 grains of real sulphuric acid; and, consequently, each 100 alkalimetrical divisions of it will neutralise one equivalent, or 31 grains of soda, 47 of potash, 17 of ammonia, 28 of lime, and so forth, with respect to any other base.

36. The stock of test or normal sulphuric acid should, as usual, be kept in well-stoppered bottles, in order to prevent concentration by evaporation. By keeping in the flask containing it a glass bead, exactly adjusted to the specific gravity of 1·032, the operator may always ascertain, at a glance, whether the acid requires readjusting.

37. With a Schüster's alkalimeter, it is convenient to prepare the test acid of such a strength that, according as it has been adjusted for potash or for soda, 10 grains of it will exactly saturate one grain of one or the other of these bases in a pure state. It is considered that the alkalimeter may be charged with a known weight of any of the other sulphuric test acids of a known strength. Suppose, for example, that the test sulphuric acid taken have a specific gravity of 1·032, we know, as we have just shown, that 1·032 grains weight of that acid contains exactly one equivalent of pure sulphuric acid = 40, and is capable, therefore, of neutralising one equivalent of any base; and, consequently, by taking a certain weight of this acid before beginning the assay, and weighing what is left of it after the assay, it is very easy to calculate, from the quantity of acid consumed in the experiment, what quantity of base has been neutralised. Thus a loss of 21·96 – 60·70 – 33·29 grains weight of this test acid represents one grain of potash, of ammonia, of soda respectively, and so on with the other bases.

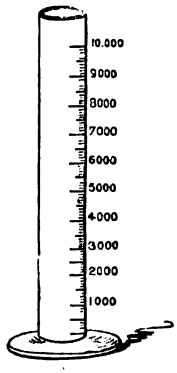

38. The operator being thus provided with an appropriate test acid, we shall now describe how he should proceed with each of them in making an alkalimetrical assay with potash.

In order to obtain a reliable result, a fair average sample must be operated upon. To secure this the sample should be taken from various parts of the mass and at once put in a wide-mouth bottle, and well corked up until wanted; when the assay has to be made, the contents of the bottle must be reduced to powder, so as to obtain a fair mixture of the whole; of this weigh out 1000 grains exactly—or less, if that quantity cannot be spared—and dissolve them in a porcelain capsule in about 8 fluid ounces of distilled hot water, or in that proportion; and if there be left anything like an insoluble residue, filter, in order to separate it, and wash it on the

Digitized by Google

filter with small quantities of distilled water, and pour the whole solution, with the washings and rinsings, into a measure divided into 10,000 water-grains' measure. If the water used for washing the insoluble residue on the filter has increased the bulk of the solution beyond 10,000 water-grains' measure, it must be reduced by evaporation to that quantity; if, on the contrary, the solution poured in the measure stands below the mark 10,000 water-grains' measure, then as much water must be added thereto as will bring the whole mass exactly to that point. In order to do this correctly, the cylindrical measure should stand well on a table, and the under or lower line formed by the liquid, as it reaches the scratch 10,000, is taken as the true level.

39. This being done, 1000 grains' measure of the filtrate, that is to say, *one-tenth* part of the whole solution, is transferred to a glass beaker, in which the saturation or neutralisation is to be effected, which is best done by means of a pipette capable of containing exactly that quantity when filled up to the scratch, *a*. In order to fill such a pipette it is sufficient to dip it into the alkaline solution and to suck up the liquor a little above the scratch, *a*; the upper orifice should then be stopped with the first finger, and by momentarily lifting it up, the liquor is allowed slowly to fall from the pipette back again into the 10,000 grains' measure until its level reaches exactly the scratch, *a*. The last drop which remains hanging from the point of the pipette may be readily detached by touching the sides of the glass measure with it. The 1000 grains being thus rigorously measured in the pipette should then be transferred to the glass beaker, in which the neutralisation is to take place, by removing the finger altogether, blowing into it to detach the last drop, and rinsing it with a little water.

40. Or, instead of the pipette just described, the operator may measure 1000 grains by taking an alkalimeter full of the alkaline solution, and emptying it into the glass beaker in which the neutralisation is to take place, rinsing it with a little water, and of course adding the rinsing to the mass in the said glass beaker.

41. Whichever way is adopted, a slight blue colour should be imparted to the 1000 grains' measure of the alkaline solution, by pouring into it a small quantity of tincture of litmus. The glass beaker should then be placed upon a sheet of white paper, or a slab of white porcelain, in order that the change of colour produced by the gradual addition of the test acid may be better observed.

42. This being done, if the operator have decided upon using the *test sulphuric for potash* (§§ 17-22), he should take one of the alkalimeters, represented in *figs.* 22, 23, 24, or 25, and fill it up to 0° (taking the under line of the liquid as the true level); then taking the alkalimeter thus charged in his right hand, and in his left the glass beaker containing the alkaline solution coloured blue by tincture of litmus, he should gradually and carefully pour the acid liquor into the alkaline solution in the glass beaker, to which a circular motion should be given whilst pouring the acid, or which should be briskly stirred, in order to insure the rapid and thorough mixing of the two liquors, and therefore their complete reaction; moreover, in order at once to detect any change of colour from blue to red, the glass beaker should be kept over the white sheet of paper or the white porcelain slab, as before stated.

43. At first no effervescence is produced, because the carbonic acid expelled, instead of escaping, combines with the portion of the alkaline carbonate as yet undecomposed, which it converts into bicarbonate of potash, and accordingly no sensible change of colour is perceived; but as soon as a little more than half the quantity of the potash present is saturated, the liquor begins to effervesce, and the blue colour of the solution is changed into one of a vinous, that is, of a purple or bluish-red hue, which is due to the action of the carbonic acid upon the blue colour of the litmus. More acid should be still added, but from this moment with very great care and with increased caution, gradually as the point of neutralisation is approached, which is ascertained by drawing the glass rod used for stirring the liquor across a slip of blue litmus-paper. If the paper remains blue, or if a red or reddish streak is thereby produced which disappears on drying the paper and leaves the latter blue, it is a proof that the neutralisation is not yet complete, and that the reddish streak was due only to the action of the carbonic acid; more acid must accordingly be poured from the alkalimeter, but one drop only at a time, stirring after each addition, until at last the liquor assumes a distinct red or pink colour, which happens as soon as it contains an extremely slight excess of acid; the streaks made now upon the litmus-paper will remain permanently red, even after drying, and this indicates that the reaction is complete and that the assay is finished.

44. If the potash under examination were perfectly caustic, the solution would suddenly change from blue to pink, because there would be no evolution of carbonic acid at all, and consequently no vinous or purple colour produced; if, on the other hand, the potash was altogether in the state of bicarbonate, the first drops of test

Digitized by Google

acid would at once decompose part of it and liberate carbonic acid, and impart a vinous colour to the solution at the very outset, which vinous colour would persist as long as any portion of the bicarbonate would remain undecomposed.

45. The neutralising point being attained, the operator allows the sides of the alkalimeter to drain, and he then reads off the number of divisions which have been employed. If, for example, 50 divisions have been used, then the potash examined contained 50 per cent. of real potash. See observ., § 48–49.

46. Yet it is advisable to repeat the assay a second time, and to look upon this first determination only as an approximation which enables the operator, now that he knows about where the point of neutralisation lies, to arrive, if need be, by increased caution as he reaches that point, at a much greater degree of precision. He should accordingly take again an alkalimeter full (1000 water-grains' measure) — that is to say, another tenth part of the liquor left in the 10,000 grains' measure — and add thereto at once 48 or 49 alkalimetrical divisions of the test acid, and after having thoroughly agitated the mixture, proceed to pour the acid carefully, two drops only at a time, stirring after such addition, and touching a strip of litmus-paper with the end of the glass rod used for stirring; and so he should go on adding two drops, stirring, and making a streak on the litmus-paper, until the liquor assumes suddenly a pink or onion-red colour, and the streak made on the litmus-paper is red also. The alkalimeter is then allowed to drain as before, and the operator reads off the number of divisions employed, from which number 2 drops (or $\frac{1}{10}$ths of a division) should be deducted; Gay-Lussac having shown that, in alkalimetrical assays, the sulphates of alkalis produced *retard* the manifestation of the red colour in that proportion. One alkalimetrical division generally consists of 10 drops, but as this is not always the case, the operator should determine for himself how many drops are necessary to make up one division, and take account of them in the assay according to the ratio thus found. In the example given before, and supposing 10 drops to form one alkalimetrical division, then the per-centage value of the sample of potash under examination would probably be as follows: —

Number of divisions of acid employed - - -	50·0
— 2 drops acid in excess - - - - -	0·2
Real per-centage of potash - - -	49·8

47. When the alkalimeter described in *fig.* 24 is employed, the test acid may, at the beginning of the experiment, be poured from the larger opening, E; but towards the end — that is, when the neutralising point is approaching — the acid should be carefully poured from the point, D, *in single drops, or only two drops at a time*, until the saturating point is hit, as we have just said. If the operator wishes to pour only one drop, he should close the larger opening, E, of the bulb with the thumb, and then fill the bulb with the test acid by inclining the alkalimeter; putting now the alkalimeter in an upright position, and removing the thumb, a certain quantity of acid will be retained in the capillary point, D; and if the thumb be now pressed somewhat forcibly against the opening, E, the acid contained in the capillary point will be forced out and form one drop, which will then fall into the alkaline solution if it be held over it. If the saturation be complete, the operator, without removing the bulb stopper, may, by applying his lips to the large opening, E, suck the acid engaged in the capillary point back into the alkalimeter.

48. If there should be in the mind of the operator any doubt as to what is meant by the onion-red colour which the liquor tinged blue with tincture of litmus acquires when slightly supersaturated, he may pour into a glass beaker a quantity of pure water equal to, or even larger than, the alkaline solution operated upon, and tinge it blue with a little tincture of litmus, to about the same degree of intensity as the alkaline liquor under examination. If he now pour into the pure water coloured blue with litmus, *one single drop* of the test acid, it will acquire at once, by stirring, the onion-red colour alluded to, and which he may now use as a standard of comparison.

49. Considering the rapidity with which these alkalimetrical operations can be performed, the operator, unless he have acquired sufficient practice, or unless a great degree of accuracy be not required, should repeat the assay two or three times, looking upon the first determination only as an approximation, and as a sort of guide as to the quantity of acid which will be required in the subsequent experiments, whereby he will now be enabled to proceed with increased caution as he approaches the point of saturation; but, at any rate, if he will not take the little extra trouble of a repetition, he should, before he begins to pour the acid, take a little of the filtered alkaline solution out of the glass beaker, as a *corps de réserve*, which he adds to the rest after the saturating point has been approximated, and from that moment he may proceed, but with great care, to complete the neutralisation of the whole.

Digitized by Google

50. Do not forget that as the test sulphuric acid *must always be added in slight excess* to obtain a distinct red streak on the litmus-paper, a correction is absolutely necessary; that is to say, the excess of sulphuric acid employed must be deducted if a strictly accurate result is sought.

51. If, instead of the special alkalimeter for potash above described, the operator prefers using that prepared of such a strength that 100 divisions of the alkalimeter (100 water-grains' measure) contain exactly one equivalent of each alkali or base, which test sulphuric acid, as we have seen, has a specific gravity of 1·032 (*see* §§ 31–36), he should proceed exactly as indicated in § 38, and following; and the alkalimeter being filled with that test acid, of specific gravity 1·032 up to 0°, it (the acid) should be poured carefully into the aqueous solution of the alkali tinged blue with litmus, until exact neutralisation is attained, precisely in the same manner as in § 38, and following.

52. The neutralising point being hit, let us suppose that the whole of the contents of the alkalimeter have been employed, that the aqueous solution tinged blue with litmus, is not yet saturated, and that, after having refilled the alkalimeter, the 4 divisions more (altogether 104 divisions) have been required to neutralise the alkali in the aqueous solution; then, since 100 divisions (1000 water-grains' measure) of the test acid now employed saturate exactly one equivalent, that is, 47 of potash, the question is now, What quantity of potash will have been saturated by the 104 divisions of acid employed? The answer is found, by a simple rule of proportion, to be nearly 49.

$$100 : 47 :: 104 : x = 48{\cdot}88.$$

The sample of potash examined contained, therefore, nearly 49 per cent. of pure potash.

53. If instead of the special test sulphuric acid for potash (§ 17), or of the test sulphuric acid for potash, soda, and other bases (§ 28), the operator uses the potash and soda alkalimeter (§§ 31–36), the method to be followed is exactly similar to that described in § 42 and following. Some of the test sulphuric acid, of specific gravity 1·1268, is to be poured into the alkalimeter until it reaches the point marked "*potash*" (that is to say, 48·62 divisions of the alkalimeter), taking the under line of the liquid as the true level, and the remaining divisions up to 0° are carefully filled with water. The operator then closes the aperture of the alkalimeter with the thumb of his left hand, and the whole is violently shaken so as to obtain a perfect mixture.

54. The acid so mixed must now be carefully poured from the alkalimeter into the alkaline solution of the potash under examination until neutralisation is attained, precisely as described § 42 and following.

55. The neutralising point being hit, the operator allows the sides of the alkalimeter to drain, and he then reads off the number of divisions employed in the experiment, which number indicates the per-centage of real potash contained in the sample.

56. Had the operator wished to estimate the quantity of potash as carbonate of potash, he should have poured the test acid into the alkalimeter up to the point marked "*carbonate of potash*," filled the remaining divisions of the alkalimeter up to 0° with water, and proceeding exactly as just mentioned, the number of divisions of acid employed would indicate the per-centage of potash contained in the sample as carbonate of potash.

57. If a *Schüster's alkalimeter* (*fig.* 26) be used, and supposing, for example, that the acid to be employed therewith is so adjusted that 10 grains *weight* of it neutralise exactly 1 grain in weight of potash, proceed as follows:—Take 100 grains in weight of a fair average of the sample, previously reduced to powder, dissolve them in water, filter with the precautions which have already been described before (§ 38 and following), and pour this solution into a glass cylinder graduated into 100 parts, and capable of containing 10,000 water grains; fill it up with water exactly as described before; of this take now 100 alkalimetrical divisions, that is to say, $\frac{1}{10}$th of the whole solution, and pour it in a glass beaker. On the other hand, charge the Schüster's alkalimeter with a certain quantity of the test acid, and weigh it, along with the alkalimeter itself, in a good balance. This done, proceed with the neutralisation of the solution in the glass beaker, by pouring the acid from the alkalimeter in the usual way, and with the usual precautions, until the saturation is completed. Replace the alkalimeter, with the quantity of unconsumed acid, in the scale of the balance, weigh accurately, and since every grain of acid represents $\frac{1}{10}$th of a grain of potash, the number of grains of acid used in the experiment indicates at once the per-centage of real potash present in the sample.

58. When, however, potash is mixed with soda, as is frequently the case with the potash of commerce, either accidentally or for fraudulent purposes, the determination of the amount of the cheaper alkali could not, until a comparatively recent period, be estimated, except by the expensive and tedious process of a regular chemical analysis.

Digitized by Google

In 1844, however, M. Edmund Pesier, professor of Chemistry at Valenciennes, published an easy and commercial method for the estimation of the quantity of soda which potash may contain, by means of an areometer of a peculiar construction, to which the name of "Natrometer" has been given by the talented professor.

59. The rationale of the method is grounded upon the increase of specific gravity which sulphate of soda produces in a solution saturated with pure sulphate of potash, and is deduced from the fact that a solution saturated with neutral sulphate of potash possesses a uniform and constant density when the saturation is made at the same temperature, and that the density of such a solution increases progressively in proportion to the quantity of sulphate of soda present; an increase of density so much the more readily observable, that the solubility of the sulphate of potash is greatly augmented by the presence of sulphate of soda. It had at first been thought that, in order to obtain anything like accuracy, it would be necessary to combine all the potash with one same acid, preferably sulphuric acid; and, consequently, that as the potash of commerce always contains a little, and sometimes a rather considerable quantity, of chloride of potassium, the latter salt should first be decomposed. Further experiments, however, established the fact, that in dissolving chloride of potassium in a saturated solution of sulphate of potash, the specific gravity of the liquor is not materially increased, since the introduction of as much as 50 per cent. of chloride of potassium does not increase that density more than 3 per cent. of soda would do when examined by the natrometer—a degree of accuracy quite sufficient for commercial purposes. When soda is added to a saturated solution of sulphate of potash, the further addition of chloride of potassium thereto renders the specific gravity of the liquor *less* than it would have been without that addition—an apparent anomaly due to the fact that chlorine, in presence of sulphuric acid, of potash, and of soda, combines with the latter base to form chloride of sodium; and it is this salt which increases the solubility of sulphate of potash, though in a somewhat less degree than sulphate of soda. Thus, if to a saturated solution of ulphate of potash 0·14 of soda be added along with 0·20 of chloride of potassium, the natrometer indicates only 0·125 of soda. Seeing, therefore, that in such an exceptional case the error does not amount to more than 0·015 of error, it will probably be found unnecessary in most cases to decompose the chloride contained in the potashes of commerce, that quantity being too small to materially affect the result. Yet, as the accurate determination of soda in potash was a great desideratum, M. Pesier contrived two processes, one of which, in the hands of the practised chemist, is as perfect as, but much more rapid than, those ordinarily resorted to; the other, which is a simplification of the first, yields results of sufficient accuracy for all commercial purposes.

60. *First process.*—Take 500 grains of a fair average sample of the potash to be examined, dissolve them in as little water as possible, filter, and wash the filter until the washings are no longer alkaline. This filtering, however, may be dispensed with when the potash is of good quality and leaves but a small residue, or when an extreme degree of accuracy is not required.

61. The potash being thus dissolved, a slight excess of sulphuric acid is added thereto; the excess is necessary to decompose the chlorides and expel the muriatic acid. The liquor so treated is then evaporated in a porcelain capsule, about six inches in diameter; and when it begins to thicken, it should be stirred with a glass rod, in order to avoid projections. When dry, the fire must be urged until the residue fuses, and it is then kept in a state of tranquil fusion for a few minutes. The capsule should then be placed upon, and surrounded with, hot sand, and allowed to cool down slowly, to prevent its cracking, which would happen without this precaution.

62. The fused mass in the capsule having become quite cold should now be treated with as little hot water as possible, that is to say, with less than 3000 grains of hot water; and this is best done by treating it with successive portions of fresh water. All the liquors thus successively obtained should then be poured into a flask capable of holding about 10,000 grains of water, and the excess of sulphuric acid *must be accurately neutralised* by a concentrated solution of pure carbonate of potash—that is to say, until the colour of litmus-paper is no longer affected by the liquor, just as in ordinary alkalimetrical or acidimetrical assays. During this operation, a pretty considerable precipitate of sulphate of potash is, of course, produced.

63. The neutralising point being exactly hit, a *saturated* solution of sulphate of potash is prepared, and brought to the atmospheric temperature; a condition which is expedited by plunging the vessel which contains the solution into a basin full of cold water, and stirring it until the thermometer plunged in the liquor indicates that the temperature of the latter is about the same as, and preferably less than, that of the air, because in the latter case it may be quite correctly adjusted by grasping the vessel with a warm hand. In order, however, to secure exactly the proper temperature, the whole should be left at rest for a few minutes after having withdrawn the

Digitized by Google

vessel from the basin of cold water used for refrigerating it, taking care simply to stir it from time to time, and to ascertain that the thermometer remains at the same degree of temperature. This done, the liquor is filtered into a glass cylinder, C, on which a scratch, H–I, has been made, corresponding to 3000 water-grains' measure. If the directions given have been exactly followed, it will be found that the filtrate is not sufficient to fill it up to that mark; the necessary volume, however, should be completed by washing the deposit of sulphate of potash in the filter, B, with a saturated solution of the same salt (sulphate of potash) *previously prepared*. It is advisable to use a saturated solution of sulphate of potash which has been kept for some time, and not one immediately prepared for the purpose, because sulphate of potash in dissolving produces a certain amount of cold, which would create delay, since it would be necessary to wait until the temperature of the mass had become the same as that of the air.

32

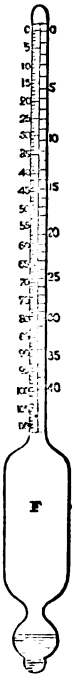

31

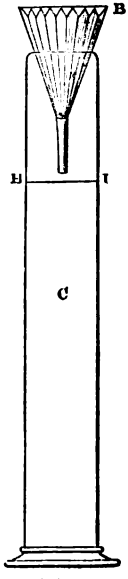

64. The liquor occupying 3000 water-grains' measure in the cylinder should be next rendered homogeneous by stirring it well, after which the natrometer may be immersed in it. The natrometer is simply an areometer of a peculiar construction, provided with two scales: the one of a pink colour shows the degrees of temperature, and indicates, for each degree of the centigrade thermometer, the level at which a solution saturated with pure sulphate of potash would stand; on the other scale, each degree represents 1 per cent. of soda (oxide of sodium), as represented in *fig.* 32.

65. The 0° of the two scales coincide with each other. If the experiment take place at the temperature of 0°, the quantity of soda will be directly determined by observing the number of degrees on the soda scale; but if the experiment be performed at 25°, for example, it will be seen that the point at which the instrument would sink in a liquor saturated with pure sulphate of potash corresponds to $\frac{8}{100}$th of soda, and, in this case, it is from *this point* that the 0° of the soda scale should be supposed to begin, which is easily accomplished by a simple subtraction, as will be seen presently.

66. Experiment having shown that the degrees of soda cannot be equidistant, but that, on the contrary, they become smaller and smaller as the quantity of soda increases, the number of degrees of soda are obtained as follows: —From the number of degrees of temperature now indicated *on the pink scale* of the natrometer, subtract the number of degrees of temperature indicated by an ordinary thermometer at starting; then look at the soda scale for the number of soda degrees which correspond to the number of degrees of temperature left after subtraction, and each of the soda degrees, beginning from the 0° of the natrometer, represents 1 per cent.

67. For example: —Suppose the experiment to have been made at starting, and as indicated by an ordnary thermometer, at + 20° centigrades, and that the level of the solution is now found to stand at 59° on the pink scale of temperature of the natrometer, then by deducting 20 (the original temperature) from 59 (number of degrees indicated by the floating point on the pink scale of temperatures of the natrometer) there remains, of course, 39. Draw the instrument out, and looking now on the said pink scale for 39°, there will be found exactly opposite, on the soda scale, the number 13, which number signifies that the potash under examination contains 13 per cent. of soda (oxide of sodium).

68. As the deposit of sulphate of potash separated by filtering might retain some sulphate of soda, it is advisable, in order to avoid all chance of error, to wash it with a saturated solution of sulphate of potash, adding as much of it as is necessary to bring the whole mass of the liquor up to the mark 3000 water-grains' measures, in which the natrometer being again immersed, the minute quantity of soda indicated should be added to the per-centage found by the first operation.

69. If a great degree of accuracy is required, the fractions of degree of the instrument must be taken account of; otherwise they may be neglected without the result being materially affected, since 3 degrees of the scale of temperature correspond only to about 1 per cent. of soda.

70. For commercial purposes, the process may be slightly varied, as follows: —Take 500 grains of a fair average sample of the potash to be examined, previously reduced to powder, and throw them into a flask, A (*fig.* 33), capable of containing about 6000 grains of water; pour upon them about 2000 grains of water, and shake until dissolved. Add now sulphuric acid thereto; this will produce a smart

Digitized by Google

effervescence, and in all probability a deposit of sulphate of potash. We say in all probability, because it is clear that if the potash in question is largely adulterated with soda, or was altogether nothing else than carbonate of soda, as has occasionally happened, it is evident that no deposit of sulphate of potash would take place; and yet as it is necessary to the success of the operation that the liquor should contain an excess of this latter salt, a certain quantity of it previously reduced to fine powder must in that case be purposely added to the solution.

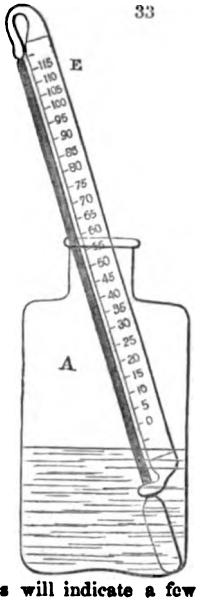

71. After the disengagement of gas has ceased, it is necessary to pour the dilute acid cautiously, and only drop by drop, until the neutralising point is correctly hit, which will be known as usual by testing with litmus-paper. But if, by accident, too much acid have been used, which is known by the reddening of the litmus-paper, the slight overdose may be neutralised by adding a small quantity of weak solution of potash.

72. As this reaction produces heat, it is neccesary to lower the liquor down to the temperature of the atmosphere, decant in a filter placed over the glass cylinder, and fill it up to the scratch 3000, by washing the residue on the filter with a saturated solution of sulphate of potash, exactly as described in § 63.

73. The glass cylinder being properly filled up to the scratch, remove the funnel, close the orifice of the glass cylinder with the palm of the hand, and shake the whole violently; holding the natrometer, which should be perfectly clean, by its upper extremity, slowly immerse it in the solution. If the potash under examination be pure, the pink scale will indicate the degree of temperature at which the experiment has been made, taking the under line as the true level of the liquid; but if, on the contrary, it contains soda, the pink scale of temperatures will indicate a few degrees more than the real temperature, and this *surplus* number of degrees, being compared with those of the soda scale contiguous to it, on the opposite side, will express the per-centage of soda present in the sample.

74. For example:—Suppose the experiment to have been made at + 12° Centigrade and to have given a solution marking 25° on the pink scale of temperatures of the natrometer, that is 13° more than the real temperature;—looking therefore at number 13 on the pink scale of temperature, it will be seen that the number exactly opposite on the soda scale, and corresponding to it, is 4, which indicates that the sample of potash examined contains 4 per cent. of soda.

It is important to bear in mind that all commercial potashes contain naturally a small quantity of soda, which quantity, in certain varieties, may even be considerable; it is only when the proportion of soda is more considerable than that which is naturally contained *in the species* of potash submitted to analysis, that it should be considered as fradulently added. The following Table, published by M. Pesier, shows the average composition of the principal varieties of potash found in commerce, when in an unadulterated state.

Average Composition of Potashes.

	Tuscan Potash.	Russian Potash.	American Potash.	Pearlash.	Potash of the Vosges.	Potashes obtained in the Laboratory by calcining. A Mixture of pure Molasses.	Potashes obtained in the Laboratory by calcining. Molasses obtained from the Cistern of a Distillery.	Salts of Iwuy dissolved and calcined.	1851. Potash purified, de Valenciennes.	1855. Potash purified, de Valenciennes.
Sulphate of potash - - -	13·47	14·11	15·32	14·38	38·84	4·27	2·98	16·19	1·50	0·70
Chloride of potassium - -	0·95	2·09	8·15	3·64	9·16	18·17	19·69	33·89	1·60	1·70
Carbonate of potash - - -	74·10	69·61	68·07*	71·38	38·63	51·83	53·90	26·64	89·95	95·24
Carbonate of soda (dry) - -	3·01	3·09	5·85	2·31	4·17	24·17	23·17	19·60	5·12	2·12
Insoluble residue - - -	0·65	1·21	3·35	0·44	2·66					
Moisture - - - - - -	7·28	8·82	undetermined	4·56	5·34	- -	- -	- -	0·50	
Phosphoric acid, lime, silica, &c.	0·54	1·07	ditto	3·29	1·20	1·56	0·26	3·68	1·33	0·24
	100·00	100·00		100·00	100·00	100·00	100·00	100·00	100·00	100·00
Alkalimetric degrees - -	56	53·1	55	54·4	31·6	60	59·7	36·5	68·5	69·5

* In the impossibility of estimating exactly the loss by calcination, and the quantity of oxide of potassium in the caustic state (hydrate of potash), we have reduced the potash to the state of carbonate, to make comparison more easy.

Digitized by Google

75. *The alkalimetrical assay of soda* is performed exactly in the same manner as that of potash—that is to say: From a fair average sample of the soda to be examined, take 1000 grains' weight, (or less if that quantity cannot be spared,) and boil it five or six minutes in about eight fluid ounces of water, filter in order to separate the insoluble portion, and wash the residue on the filter with boiling water until it no longer drops from the filter with an alkaline reaction, and the bulk of the filtered liquid and the washings received in a graduated glass cylinder form 10,000 grains' measure. Should the water which may have been required to wash the residue have increased the bulk of the solution beyond that quantity, it should be evaporated to reduce it to the bulk mentioned.

76. This being done, 1000 water-grains' measure—that is to say, $\frac{1}{10}$th part of the aqueous solution of the soda ash above mentioned (§ 75)—are transferred to the glass beaker or vessel in which the saturation is intended to take place, it is tinged distinctly blue with tincture of litmus, and the operation is performed in the same manner and with the same precautions as for potash, the glass beaker containing the blue alkaline solution being placed upon a sheet of white paper, or a slab of white porcelain, the better to observe the change of colour which takes place when the saturating point is approaching.

77. Having put into a glass beaker the 1000 grains' measure of the aqueous solution of soda ash to be examined (§ 75), and if the *test sulphuric acid for soda*, described before (§§ 23-27) the alkalimeter, *fig.* 23, 24, or 25, should be filled with that test acid up to the point marked 0° (taking the under line of the liquid as the true level), and poured therefrom with the precaution already indicated, stirring briskly, at the same time, the liquid in the beaker. As is the case with the alkalimetrical assay of potash, the carbonic acid expelled by the test acid reacting upon the as yet undecomposed portion of the soda ash, converts it into bicarbonate of soda, so that at first no effervescence is produced; but as soon as half the quantity of the soda in the solution is saturated, a brisk effervescence takes place. At first, therefore, the operator may pour at once, without fear, a pretty large quantity of the test acid into the alkaline solution, but as soon as this effervescence makes its appearance he should proceed with increased precaution gradually as the saturating point is approached. The *modus operandi* is, in fact, precisely as already detailed for the assay of potash, precisely the same kind and amount of care is requisite, and the assay is known to be terminated when the streaks made upon the litmus-paper with the stirring rod remain distinctly and permanently of a pink colour.

78. After saturation, and after having allowed the sides of the alkalimeter to drain, the number of divisions at which the test acid stands in the alkalimeter indicate at once the per-centage of the soda assayed, since, as we said, each division of this particular test acid represents one grain of pure soda. If, therefore, the test acid stands at 52 in the alkalimeter, then the soda assayed contained 52 per cent. of real soda. See, besides, the observations of § 48 and following, and also § 81.

79. If, instead of the special test acid for soda just alluded to, the operator employs that which has a specific gravity of 1·032, and 100 alkalimetrical divisions of which saturate one equivalent of each base, the *modus operandi* is the same—that is to say, the alkalimeter is filled with it up to 0°, and it is poured therefrom carefully into the alkaline solution; but as the equivalent of soda is 31, and 100 alkalimetrical divisions of the test sulphuric acid now employed are capable of saturating only that quantity of soda, it is clear that with the soda ash taken as an example in the preceding case, and containing 52 per cent. of real soda, the operator will have to refil his alkalimeter with the same test acid, and that a certain number of divisions of this second filling will have to be employed to perfect the saturation. In this instance the operator will find that nearly 68 divisions more, altogether 168 divisions (correctly, 167°·74) have been required to effect the saturation.

80. If, instead of the special test sulphuric acid for soda (§§ 23-27), or the test sulphuric acid for potash, soda, and other bases (§§ 31-34), the operator uses the potash and soda alkalimeter (§§ 28-35), the method is always the same (§§ 74, 75)—that is to say, the aqueous solution of the soda ash is poured into the glass beaker, the difference being merely, that instead of the alkalimeter being quite filled up with the test sulphuric acid, which, in the present instance, has a specific gravity of 1·268 (§ 29), the said test acid is poured into the alkalimeter only up to the point marked "*soda*" (taking the under-line of the liquid as the true level), and the remaining divisions of the alkalimeter are carefully filled up with water. The mouth of the tube should then be thoroughly closed with the thumb of the left hand, and the whole violently shaken until perfectly mixed, taking great care, of course, not to squirt any of the acid out of the tube, which evidently would cause an amount of error proportionate to the quantity of the test acid which would have thus been lost. The acid should then be poured from the alkalimeter with the usual precaution

Digitized by Google

(§ 76) into the glass beaker containing the aqueous solution of the soda ash under examination, until complete neutralisation is attained, stirring briskly all the time, or after each addition of the test acid. The neutralisation point being hit, the sides of the alkalimeter are allowed to drain, and the operator then reads off the number of divisions employed, which number indicates the per-centage of real soda contained in the sample assayed. Thus, if the sample operated upon be the same as that alluded to before, the number of divisions employed being 52 would indicate 52 per cent. of real soda.

81. If the operator wishes to estimate the amount of soda in the sample as *carbonate of soda*, he should fill the alkalimeter with the test acid in question (specific gravity 1·268) up to the point marked *carbonate of soda*, and fill the remaining divisions with water, shake the whole well, and proceed with the neutralisation of the aqueous solution of the sample in the glass beaker as just described. Supposing, as before, that the sample in question contains 52 per cent. of real soda, it will now be found that the number of divisions employed altogether to saturate the sample completely are very nearly 89, for 52 of caustic soda correspond to 88·90 of the carbonate of that alkali.

82. If the soda ash is very poor, instead of operating upon 1000 water-grains' measure, or one-tenth part of the whole solution (= 100 grains' weight of the soda ash, §§ 76–77), it is advisable to take three or four thousand water-grains' measure of the alkaline solution, and to divide, by three or four, the result obtained by saturation. Suppose, for example, that the quantity of real soda found is 46; this, if only 1000 grains' measure had been taken, would, of course, indicate 46 per cent.; but as 4000 water-grains' measure of solution have been taken instead, that number 46 must, accordingly, be divided by 4, which gives 11½ per cent. only of real soda contained in the sample under examination.

83. The soda ash of commerce contains generally a per-centage of insoluble substances, which are removed by filtering, as we said, and a greater or less quantity of chloride of sodium (common salt) and of sulphate of soda, which, however, do not in the slightest degree interfere with the accuracy of the result. But there is a source of error resulting from the presence in the soda ash of sulphuret of calcium, of sulphite, and sometimes also, though more rarely, of hyposulphite, of soda. When sulphuret of calcium is present in the ash, on heating the latter by hot water, a double decomposition takes place, the sulphuret of calcium, reacting upon the carbonate of soda, forms sulphuret of sodium and carbonate of lime. Now sulphuret of sodium saturates the test acid just as carbonate of soda; but as it has no commercial value, it is clear that if the ash contains a quantity of the useless sulphuret at all considerable, a very serious damage may be sustained by the purchaser if the per-centage of that substance present in the ash be taken account of as being soda. Sulphite of soda is produced from the oxidisation of this sulphuret of sodium, and is objectionable inasmuch that when the test acid is added slowly to the aqueous solution of the ash, the effect is to convert the sulphite into bisulphite of soda, before any evolution of sulphurous acid, and consequently before the pink reaction on litmus-paper is produced.

84. In order to obviate the inaccuracies resulting from the neutralisation of a portion of the test acid by these substances, it is necessary to convert them into sulphates of soda, which is easily done by calcining a quantity of the sample with five or six per cent. of chlorate of potash, as recommended by Gay-Lussac and Welter. The operator, therefore, should intimately mix 50 or 60 grains' weight of pulverised chlorate of potash with 1000 grains of the pulverised sample, and fuse the mixture in a platinum crucible, for which purpose a blowpipe gas-furnace will be found exceedingly convenient. The fused mass should be washed, and the filtrate being received into a 10,000 water-grains' measure, and made up with water to occupy that bulk, may then be assayed in every respect as described before with one or other of the test acids mentioned.

85. When, however, the soda ash contains some hyposulphite of soda — which fortunately is seldom the case, for this salt is very difficultly produced in presence of a very large excess of alkali — it should not be calcined with chlorate of potash, because in that case one equivalent of hyposulphite becomes transformed *not into one equivalent of sulphate*, but, reacting upon one equivalent of carbonate of soda, expels its carbonic acid, and forms with the soda of the decomposed carbonate a *second equivalent* of sulphate of soda, each equivalent of hyposulphite becoming thus converted into two equivalents of sulphate, and therefore creating an error proportionate to the quantity of the hyposulphite present, each equivalent of which would thus destroy one equivalent of real and available alkali, and thus render the estimation of the sample inaccurate, and possibly to a very considerable extent.

86. When this is the case, it is therefore advisable, according to Messrs. Fordos and Gelis, to change the condition of the sulphurets, sulphites, and hyposulphites, by add-

Digitized by Google

ing a little neutral chromate of potash to the alkaline solution, whence results sulphate of chromium, water, and a separation of sulphur, which will not affect the accuracy of the alkalimetrical process.

87. Whether the sample to be analysed contains any sulphuret, sulphite, or hyposulphite, is easily ascertained as follows:—If, on pouring sulphuric acid upon a portion of the sample of soda ash under examination, an odour of sulphuretted hydrogen —that is, an of odour rotten eggs—is evolved, or if a portion of the soda ash, being dissolved in water, and then filtered, produces a *black* precipitate (sulphuret of lead) when solution of acetate of lead is poured into it, then the sample contains a sulphuret.

88. And if, after adding to some dilute sulphuric acid as much bichromate of potash as is necessary to impart to it a distinct reddish-yellow tinge, and a certain quantity of the solution of the soda ash under examination being poured into it, but not in sufficient quantity to neutralise the acid, the reddish-yellow colour becomes green, it is a proof that the sample contains either sulphite or hyposulphite of soda, the green tinge being due to the transformation of the chromic acid into sesquioxyde of chromium.

89. And if, muriatic acid being poured into the *clear* solution of the soda ash, a turbidness supervenes after some time if left at rest, or at once if heat is applied, it is due to a deposit of sulphur, an odour of sulphurous acid being evolved, and hyposulphite of soda is probably present. We say probably, because if sulphurets and sulphites are present, the action of muriatic acid would decompose both, and liberate sulphuretted hydrogen and sulphurous acid; but as these two gases decompose each other, a turbidness due to a separation of sulphur is also formed; thus $2HS + SO^2 = 2HO + 2S$.

90. As we have already had occasion to remark, the soda ash of commerce frequently contains some, and occasionally a large quantity of caustic soda, the proportion of which it is at times important to determine. This may be done, according to Mr. Barreswill, by adding a solution of chloride of barium to the aqueous solution of the soda ash, by which the carbonate of soda is converted into carbonate of barytes, whilst the caustic soda, reacting upon the chloride of barium, liberates a quantity of caustic barytes proportionate to that of the caustic soda in the soda ash. After this addition of chloride of barium, the liquor is filtered in order to separate the precipitated carbonate of barytes produced, and which remains on the filter, on which it should be washed with pure water. A few lumps of chalk are then put into a Florence flask, *a*, and some muriatic acid being poured upon it, an effervescence due to a disengagement of carbonic acid is produced, the flask is then closed with a good cork, provided with a bent tube, *b*, reaching to the bottom of the vessel *c*, and the stream of carbonic acid produced is then passed through the liquor *c*, filtered from the carbonate of barytes above mentioned. The stream of carbonic acid produces a precipitate of carbonate of barytes, which should be also collected on a separate filter, washed, dried, and weighed. Each grain of this second precipitate of carbonate of barytes corresponds to 0·3157 of caustic soda.

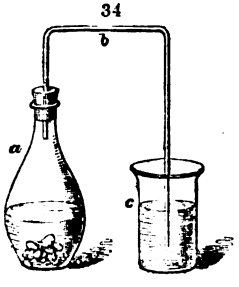

91. As the soda ash of commerce almost invariably contains earthy carbonates, the sample operated upon should always be dissolved in hot water, and filtered in order to separate the carbonate of lime which otherwise would saturate a proportionate quantity of the test acid, and thus render the analysis worthless.

92. The quantity of water contained in either potash or soda ash is ascertained by heating a weighed quantity of the sample to redness in a covered platinum capsule or crucible. The loss after ignition indicates the proportion of water. If any caustic alkali is present, 1 equivalent, = 9 of water, is retained, which cannot be thus eliminated, but which may, of course, be determined by calculation after the proportion of caustic soda has been found, as shown before, each 31 grains of caustic soda containing 9 grains of water.

93. Besides the alkalimetrical processes which have been explained in the preceding pages, the proportion of available alkali contained in the sample may be estimated from the amount of carbonic acid which can be expelled by supersaturating the alkali with an acid. The determination of the value of alkalis from the quantity of carbonic acid thus evolved by the supersaturation of the carbonate acted upon has long been known. Dr. Ure, in the "Annals of Philosophy," for October, 1817, and then in his "Dictionary of Chemistry," 1821, and more recently in his pamphlet "Chemistry Simplified," described several instruments for analysing earthy and alkaline

Digitized by Google

carbonates, and for a description of which the reader is referred to the article on ACIDIMETRY. The ingenious little apparatus of Drs. Fresenius and Will for the same purpose, and to which we have already alluded in the same article, gives accurate results; but it should be observed that when the potash or soda of commerce contains any caustic alkali, or bicarbonate, or earthy carbonates, or sulphuret of alkali—which, as we have seen, is frequently, and, indeed, almost invariably, the case, the process is no longer applicable without first submitting the sample to several operations—which render this process troublesome and unsuited to unpractised hands. Thus, if caustic potash is present, the sample must be first mixed and triturated with its own weight of pure quartzose sand and about one-third of its weight of carbonate of ammonia. The mass is then moistened with aqueous ammonia, and then put into a small iron capsule and evaporated to dryness, so as to expel completely the ammonia and carbonate of ammonia. The mass is then treated by water, filtered, washed, and concentrated to a proper bulk by evaporation, transferred to the apparatus, and treated as will be seen presently. If the sample contains caustic soda, instead of one-third, at least half of its weight of carbonate of ammonia should be employed. But for the estimation of *pure* carbonates, Drs Fresenius and Will's method is both accurate and easy. The apparatus consists of two flasks, A and B; the first should have a capacity of from two to two ounces and a half; the second, or flask B, should be of a somewhat smaller size, and hold about one and a half or two ounces. Both should be provided with perfectly sound corks, each perforated with two holes, through which the tubes *a*, *c*, *d* are passing. The lower extremity of the tube *a* must be adjusted so as to reach nearly to the bottom of the flask A, and its upper extremity is closed by means of a small pellet of wax, *b*; *c* is a tube bent twice at right angles, one end of which merely protrudes through the cork into the flask A, but the other end reaches nearly to the bottom of the flask B. The tube *d* of the flask B merely protrudes through the cork into the flask.

35

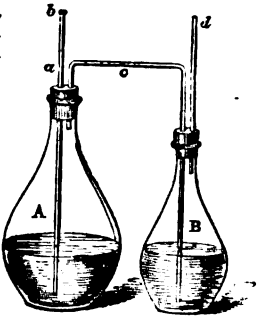

95. The apparatus being so constructed, a certain quantity — 100 grains, for example — of the potash or soda ash under examination (and which may have been previously dried) is weighed and introduced into the flask A, and water is next poured into this flask to about one-third of its capacity Into the other flask, or flask B, concentrated ordinary sulphuric acid is poured, and the corks are firmly put in the flasks, which thus become connected, so as to form a twin-apparatus, which is then carried to a delicate balance, and accurately weighed. This done, the operator removes the apparatus from the balance, and applying his lips to the extremity of the tube *d*, sucks out a few air-bubbles, which, as the other tube, *a*, is closed by the wax pellet, rarefies the air in the flask A, and consequently causes the sulphuric acid of flask B to ascend a certain height (after the suction) into the tube *c*; and if, after a short time, the column of sulphuric acid maintains its height in the tube *c*, it is a proof that the apparatus is air-tight, and therefore as it should be. This being ascertained, suction is again applied to the extremity of the tube *d*, so that a portion of the sulphuric acid of the flask B ascends into the tube *c*, and presently falls into the flask A, the quantity which thus passes over being, of course, proportionate to the vacuum produced by the suction. As soon as the acid thus falls in the water containing the alkaline carbonate in the flask A, an effervescence is immediately produced, and as the carbonic acid disengaged must, in order to escape, pass, by the tube *c*, through the concentrated sulphuric acid of the flask B, it is thereby completely dried before it can finally make its exit through the tube *d*. The effervescence having subsided, suction is again applied to the tube *d*, in order to cause a fresh quantity of sulphuric acid to flow over into the flask A, as before; and so on, till the last portion of sulphuric acid sucked over produces no effervescence, which indicates, of course, that all the carbonate is decomposed, and that, consequently, the operation is at an end. A powerful suction is now applied to the tube *d*, in order to cause a tolerably large quantity of sulphuric acid, but not all, to flow into the flask A, which thus becomes very hot, from the combination of the concentrated acid with the water, so that the carbonic acid is thereby thoroughly expelled from the solution. The little wax pellet which served as a stopper is now removed from the tube *d*, and suction applied for some time, in order to sweep the flasks with atmospheric air, and thus displace all the carbonic acid in the apparatus, which is allowed to become *quite cold*, and weighed again, together with the wax pellet, the difference between the first and the second weighing—that is to say, the loss—indicating the quantity of carbonic acid which was contained in the carbonate, which has escaped, and from which, of

Digitized by Google

course, the quantity of the carbonated alkali acted upon may be calculated. Suppose in effect, that the loss is 19 grains : taking the

Equivalent of soda	- - - - - - -	= 31
do carbonic acid	- - - - - - -	= 22
1 equivalent of carbonate of soda	- -	= 53,

it is clear that the 19 grains of carbonic acid which have been expelled represent 45·77 grains of carbonate of soda, or, in other words, 100 grains of soda ash operated upon contained 45·77 of real carbonate of soda, thus :—

$$CO^2 \quad NaO^1CO^2 \quad CO^2 \qquad NaO^1CO^2$$
$$22 \; : \; 53 \; :: \; 19 \; : \; x \; = \; 45{\cdot}77$$

96. As the soda ash of commerce always contains earthy carbonates, and very frequently sulphurets, sulphites, and occasionally hyposulphites, instead of putting the 100 grains to be operated upon directly into the flask A, it is absolutely necessary first to dissolve them in boiling water, to filter the solution, and to wash the precipitate which may be left on the filter with boiling water. The solution and the washings being mixed together, should then be reduced by evaporation to a proper volume for introduction into the flask A, and the process is then carried on as described. If sulphuret, sulphites, or hyposulphites are present, the ash should be treated exactly as mentioned in §§ 83–91, previous to pouring the solution into the flask A, since otherwise the sulphuretted hydrogen and sulphurous acid, which would be disengaged along with the carbonic acid, would apparently augment the proportion of the latter, and render the result quite erroneous.

97. The balance used for this mode of analysis should be capable of indicating small weights when heavily laden.—A. N.

ALKALINE EARTHS—Barytes, Lime, and Strontia. These earths are so called to distinguish them from the earths Magnesia and Alumina. They are soluble in water, but to a much less extent than the alkalies. Their solutions impart a brown colour to tumeric paper, and neutralise acids. They are, however, distinguished from the alkalies, by their combination with carbonic acid being nearly insoluble in water.

ALKANET (*Orcanette*, Fr.; *Orkanet*, Germ.). *Anchusa tinctoria.* A species of bugloss, or boragewort, cultivated in the neighbourhood of Montpellier and in the Levant. It is sometimes called the bugloss of Languedoc, or the dyer's bugloss. The anchusa is a rough plant, with downy and spear-shaped leaves, and clusters of small purple or reddish flowers, the stamens of which are shorter than the corolla. It affords a fine red colour to alcohol and oils, but a dirty red to water. Its principal use is for colouring ointments, oils, and *pommades.* The spirituous tincture gives to white marble a beautiful deep stain ; but, usually, wax is coloured with the anchusa, and then applied to the surface of warm marble. It stains it flesh-colour, and the stain sinks deep into the stone.

Alkanet root was analysed by Dr. John, who found the constituents to be a *peculiar colouring* matter (*pseudo-alkanium*), 5·50; extractive, 1·00; gum, 6·25; matters extracted by caustic potash, 65 00; woody fibre, 18·00.

The colouring matter resides in the cortical part of the root, and was regarded by Pelletier as a kind of fatty acid (*anchusic acid*); but it is now usually considered to be a resinoid (*anchusine*), whose composition is $C^{35}\,H^{36}\,O^3$ This root is sometimes termed the spurious *alkanet root* (*radix alkannæ spuriæ*), to distinguish it from the Al-kenna.

AL-KENNA, or AL-HENNA, is the name of the roots and leaves of *Lawsonia inermis*, which have been long employed in the East to dye the nails, teeth, hair, garments, &c. The leaves, ground and mixed with a little limewater, serve for dyeing the tails of horses in Persia and Turkey.

It is the same as the herb *Henna* frequently referred to by the Oriental poets. The powder of the leaves, being wet, forms a paste, which is bound on the nails for a night, and the colour thus given will last for several weeks.

This plant is distinguished as the true alkanet root (*radix alkennæ vera*).

ALLIGATION. An arithmetical formula, useful on many occasions for ascertaining the proportion of constituents in a mixture, when they have undergone no change of volume by chemical action, or for finding the price or value of compounds consisting of ingredients of different values. Thus, if a quantity of sugar worth 8*d.* the pound, and another quantity worth 10*d.*, are mixed, the question to be solved by alligation is, what is the value of the mixture by the pound ? Alligation is of two kinds—*medial* and *alternate* ; *medial*, when the rate of mixture is sought from the rates and quantities of the simples ; *alternate*, when the quantities of the simples are sought from the rates of the simples and the rate of the mixture.—*Webster.*

Digitized by Google

ALLIOLE. *Alliole* is obtained by distilling crude naphtha, and collecting all that leaves the still in the first distillation before the boiling temperature reaches 194°F.; and on the second distillation, all below 176°F. It boils, when nearly free from *benzole*, at a temperature of from 140° to 158° F., and possesses an alliaceous odour somewhat resembling sulphide of carbon.

ALLIUM SATIVUM. See GARLIC.

ALLOPHANE—from ἄλλος *other*, and φαίνω *to appear*, in allusion to the change of appearance which this mineral undergoes before the blowpipe flame. This mineral, which is essentially silica 24·22, alumina 40·39, and water 35·39, is generally found lining small cavities, and in veins in marl or chalk. Allophanes have been found containing from 14 to 19 per cent. of oxide of copper.

ALLOTROPY. *Allotropic Condition.* A name introduced by Berzelius to signify *another form* of the same substance, derived from ἄλλος, another, and τρόπος, habit. Carbon, for example, exists as the diamond, a brilliant gem, with difficulty combustible; as graphite, a dark, heavy, opaque mass, often crystalline, also of great infusibility; and as charcoal, a dark porous body, which burns with facility.

Sulphur, when melted, is at 230° F. perfectly liquid. Being heated to 430° F., it becomes thick and so tenacious that it can scarcely be poured out of the vessel in which it is melted. When heated to 480° it again becomes liquid, and continues so until it boils. These examples are sufficient to explain the meaning of this term. An extensive series of bodies appears to assume similar allotropic modifications. The probability is that, with the advance of physical and chemical science, many of the substances now supposed to be elementary will be proved to be but allotropic states of some one form of matter. Deville has already shown that silicon and boron exist, like the diamond, in three allotropic states—one of the conditions of boron being much harder than the diamond. See ISOMERISM.

ALLOY. (*Alliage*, Fr.; *Legirung*, Germ.) From the French *allier*, to unite or mix; or the Latin *alligo*, to bind. This term formerly signified mixing some baser metal with gold and silver, and this meaning is still preserved in reference to coinage; but, in chemistry, it now means any compound of any two or more metals whatever. Thus, bronze is an alloy of copper and tin; brass, an alloy of copper and zinc; and type metal, an alloy of lead and antimony. All the alloys possess metallic lustre, even when cut or broken to pieces; they are opaque; are excellent conductors of heat and electricity; are frequently susceptible of crystallising; are more or less ductile, malleable, elastic, and sonorous. An alloy which consists of metals differently fusible is usually malleable when cold, and brittle when hot, as is exemplified with brass and gong metal.

Many alloys consist of definite or equivalent proportions of the simple component metals, though some alloys seem to form in any proportion, like combinations of salt or sugar with water. It is probable that peculiar properties belong to the equivalent or atomic ratio, as is exemplified in the superior quality of brass made in that proportion.

The experiments of Crookewitt upon amalgams appear to prove that the combination of metals in alloys obeys some laws of a similar character to those which prevail between combining bodies in solution; *i.e.* that a true combining proportion existed.

By amalgamation and straining through chamois leather, he obtained crystalline metallic compounds of gold, bismuth, lead, and cadmium, with mercury, which appeared to exist in true definite proportions. With potassium he obtained two amalgams, KHg^{20} and KHg^{16}. With silver, by bringing mercury in contact with a solution of nitrate of silver, according to the quantity of mercury employed, he obtained such amalgams as Ag^3Hg^{16}, $AgHg^2$, $AgHg^3$, $AgHg^4$.

Beyond those there are many experiments which appear to prove that alloys are true chemical compounds; but, at the same time, it is highly probable that the true chemical alloy is very often *dissolved* (mechanically disseminated) in that metal which is largely in excess.

Some years since, the editor carried out an extensive series of experiments in the laboratory of the Museum of Practical Geology, with the view of obtaining a good alloy for soldiers' medals, and the results confirmed his views respecting the laws of definite, proportional combination among the metals. Many of those alloys were struck at the Mint, and yielded beautiful impressions; but there were many objections urged against the use of any alloy for a medal of honour.

One metal does not alloy indifferently with every other metal, but it is governed in this respect by peculiar affinities; thus, silver will hardly unite with iron, but it combines readily with gold, copper, and lead. In comparing the alloys with their constituent metals, the following differences may be noted. In general, the ductility of the alloy is less than that of the separate metals, and sometimes in a very remark-

Digitized by Google

able degree; on the contrary, the alloy is usually harder than the mean hardness of its constituents. The mercurial alloys or amalgams are, perhaps, exceptions to this rule.

The specific gravity is rarely the mean between that of each of its constituents, but is sometimes greater and sometimes less; indicating, in the former case, a closer cohesion; and, in the latter, a recedure, of the particles from each other in the act of their union. The alloys of the following metals have been examined by Crookewitt, and he has given their specific gravities as in the following Table; the specific gravity of the unalloyed metals being—

Copper - -	8·794	Zinc - -	6·860
Tin - - -	7·305	Lead - -	11·354

That of the alloys was—

$Cu^2 Sn^5$ - -	7·652	Cu Pb - -	10·375
Cu Sn - -	8·072	$Sn Zn^3$ - -	7·096
$Cu^2 Sn$ - -	8·512	Sn Zn - -	7·115
$Cu^3 Zn^5$ - -	7·939	$Sn^3 Zn$ - -	7·235
$Cu^3 Zn^2$ - -	8·224	$Sn Pb^2$ - -	9·965
$Cu^2 Zn$ - -	8·392	Sn Pb - -	9·394
$Cu^2 Pb^3$ - -	10 753	$Sn^3 Pb$ - -	9·025

The following Tables of binary alloys exhibit this circumstance in experimental detail:—

Alloys having a density greater than the mean of their constituents.	Alloys having a density less than the mean of their constituents:
Gold and zinc	Gold and silver
Gold and tin	Gold and iron
Gold and bismuth	Gold and lead
Gold and antimony	Gold and copper
Gold and cobalt	Gold and iridium
Silver and zinc	Gold and nickel
Silver and lead	Silver and copper
Silver and tin	Iron and bismuth
Silver and bismuth	Iron and antimony
Silver and antimony	Iron and lead
Copper and zinc	Tin and lead
Copper and tin	Tin and palladium
Copper and palladium	Tin and antimony
Copper and bismuth	Nickel and arsenic
Lead and antimony	Zinc and antimony
Platinum and molybdenum	
Palladium and bismuth	

There are many points of great physical as well as chemical interest in connection with alloys, which require a closer study than they have yet received. There are some striking facts, brought forward by M. Wertheim, deduced from experiments carried on upon fifty-four binary alloys and nine ternary alloys of simple and known composition, which will be found in the "Journal of the French Institute," to which the reader desiring information on this point is referred.

It is hardly possible to infer the melting point of an alloy from that of each of its constituent metals; but, in general, the fusibility is increased by mutual affinity in their state of combination. Of this a remarkable instance is afforded in the fusible metal consisting of 8 parts of bismuth, 5 of lead, and 3 of tin, which melts at the heat of boiling water, or 212° F., though the melting point deduced from the mean of its components should be 514° F. This alloy may be rendered still more fusible by adding a little mercury to it, when it forms an excellent material for anatomical injections. See FUSIBLE METAL.

On the Melting Point of Certain Alloys.

	Centrigrade Thermometer.		Centrigrade Thermometer.
Lead - - - - - - - - -	334°	Tin, 2 atoms; lead, 1 atom	196°
Tin - - - - - - - - -	230°	„ 1 „ „ 1 „ -	241°
Tin, 5 atoms; lead, 1 atom	194°	„ 1 „ „ 3 „ -	289°
„ 4 „ „ 1 „ -	189°	„ 2 vols.; „ 1 vol. -	194°
„ 3 „ „ 1 „ -	186°		

In these experiments of M. Kupffer, the temperatures were determined with thermometers of great delicacy, and the weighings were carefully carried out.—*Ann. de Chimie*, xl. 285–302; *Brewster' Edin. Jour. Sci.* i. N.S. p. 299.

Digitized by Google

The colours of alloys do not depend in any considerable degree upon those of the separate metals; thus, the colour of copper, instead of being rendered paler by a large addition of zinc, is thereby converted into a rich-looking metal, brass.

By means of alloys, we multiply, as it were, the numbers of useful metals, and sometimes give usefulness to such as are separately of little value. Since these compounds can be formed only by fusion, and that many metals are apt to oxidise readily at their melting temperature, proper precautions must be taken in making alloys to prevent this occurrence. Thus, in combining tin and lead, resin or grease is usually put on the surface of the melting metals, the carbon produced by the decomposition of which protects them, in most cases, sufficiently from oxidisement. When we wish to combine tin with iron, as in the tinning of cast-iron tea kettles, we rub sal ammoniac upon the surfaces of the hot metals in contact with each other, and thus exclude the atmospheric oxygen by means of its fumes. When there is a notable difference in the specific gravities of the metals which we wish to combine, we often find great difficulties in obtaining homogeneous alloys; for each metal may tend to assume the level due to its density, as is remarkably exemplified in alloys of gold and silver made without adequate stirring of the melting metals. If the mass be large and slow of cooling, after it is cast in an upright cylindrical form, the metals sometimes separate, to a certain degree, in the order of their densities. Thus, in casting large bells and cannon with copper alloys, the bottom of the casting is apt to contain too much copper and the top too much tin, unless very dexterous manipulation in mixing the fused materials has been employed immediately before the pouring out of the melted mass. When such inequalities are observed, the objects are broken and re-melted, after which they form a much more homogeneous alloy. This artifice of a double melting is often had recourse to, and especially in casting the alloys for the specula of telescopes.

When we wish to alloy three or more metals, we often experience difficulties, either because one of the metals is more oxidable, or denser, or more fusible, than the others, or because there is no direct affinity between two of the metals. In the latter predicament, we shall succeed better by combining the three metals first in pairs, for example, and then melting the two pairs together. Thus, it is difficult to unite iron with bronze directly; but if, instead of iron, we use tin plate, we shall immediately succeed, and the bronze, in this manner, acquires valuable qualities from the iron. Thus, also, to render brass better adapted for some purposes, a small quantity of lead is sometimes added to it, but this cannot be done directly with advantage; it is better to melt the lead first along with the zinc, and then to add this alloy to the melting copper, or the copper to that alloy, and fuse them together.

One of the alloys most useful to the arts is brass; it is more ductile and less easily oxidised than even its copper constituent, notwithstanding the opposite nature of the zinc. (See BRASS.) This alloy may exist in many different proportions, under which it has different names, as tombac, similor, pinchbeck, &c. Copper and tin form compounds of remarkable utility, known under the name of *hard brass*, for the bushes, steps, and bearings of the axles, arbours, and spindles in machinery; and of *bronze*, *bell-metal*, &c. (See BRONZE, &c.) Gold and silver, in their pure state, are too soft and flexible to form either vessels or coins of sufficient strength and durability; but when alloyed with a little copper, they acquire the requisite hardness and stiffness for these and other purposes. Aluminium has been found by Dr. Percy to possess the same hardening property.

When we have occasion to unite several pieces of the same or of different metals, we employ the process called *soldering*, which consists in fixing together the surfaces by means of an interposed alloy, which must be necessarily more fusible than the metal or metals to be joined. That alloy must also consist of metals which possess a strong affinity for the substances to be soldered together. Hence each metal would seem to require a particular kind of solder, which is, to a certain extent, true. Thus, the solder for gold trinkets and plate is an alloy of gold and silver, or gold and copper; that for silver trinkets is an alloy of silver and copper; that for copper is either fine tin, for pieces that must not be exposed to the fire, or a brass alloy called hard solder, of which the zinc forms a considerable proportion. The solder of lead and tinplate is an alloy of lead and tin, and that of tin is the same alloy with a little bismuth. Tinning, gilding, and silvering may also be reckoned a species of alloys, since the tin, gold, and silver are superficially united in these cases to other metals.

Metallic alloys possess usually more tenacity than could be inferred from their constituents; thus, an alloy of 12 parts of lead with 1 of zinc has a tenacity double that of zinc.

The cohesive force of alloys is well shown in the following Table, in which the results are mostly those obtained by Muschenbroek.*

* Encyclopedia Britannica, Art. STRENGTH, and Introduction ad Philoso Naturæ.

Digitized by Google

Alloy of				Specific Cohesion.	Cohesion of square inch in lbs. Avoirdupois.	Specific Gravity.
	parts.		parts.			
Gold - -	2	Silver - -	1	2·972	28,000	
ditto - -	5	Copper -	1	5·307	50,000	
Silver - -	5	ditto - -	1	5·148	48,500	
ditto - -	4	Tin - -	1	4·352	41,000	
Brass - -		- - -		4·870	45,882	
Copper - -	10	Tin - -	1	3·407	32,093	
ditto - -	8	ditto - -	1	3·831	36,088	
ditto - -	6	ditto - -	1	4·687	44,071	
ditto - -	4	ditto - -	1	3·794	35,739	
ditto - -	2	ditto - -	1	0·108	1,017	
ditto - -	1	ditto - -	1	0·077	725	
Tin (English) -	10	Lead - -	1	0·733	6,904	
ditto - -	8	ditto - -	1	0·841	7,922	
ditto - -	6	ditto - -	1	0·849	7,997	
ditto - -	4	ditto - -	1	1·126	10,607	
ditto - -	2	ditto - -	1	0·793	7,470	
ditto - -	1	ditto - -	1	0·751	7,074	
Tin (Banco) -	10	Antimony -	1	1·187	11,181	7·359
ditto - -	8	ditto - -	1	1·049	9,881	7·276
ditto - -	6	ditto - -	1	1·341	12,632	7·228
ditto - -	4	ditto - -	1	1·431	13,480	7·192
ditto - -	2	ditto - -	1	1·277	12,092	7·105
ditto - -	1	ditto - -	1	0·338	3,184	7·060
ditto - -	10	Bismuth -	1	1·347	12,688	7·576
ditto - -	4	ditto - -	1	1·772	16,692	7·613
ditto - -	2	ditto - -	1	1·488	14,017	8·076
ditto - -	1	ditto - -	1	1·276	12,020	8·146
ditto - -	1	ditto - -	2	1·063	10,013	8·58
ditto - -	1	ditto - -	4	0·836	7,875	9·009
ditto - -	1	ditto - -	10	0·411	3,871	9·439
Tin (English) -	1	Zinc - -	1	0·958	9,024	
ditto - -	2	ditto - -	1	1·164	10,964	
ditto - -	4	ditto - -	1	1·089	10,258	
ditto - -	8	ditto - -	1	1·126	10,607	
ditto - -	1	Antimony -	1	0·154	1,450	7·000
ditto - -	3	ditto - -	2	0·338	3,184	
ditto - -	4	ditto - -	1	1·202	11,323	
Lead (Scotch) -	1	Bismuth -	1	0·777	7,319	10·931
ditto - -	2	ditto - -	1	0·620	5,840	11·090
ditto - -	10	ditto - -	1	0·300	2,826	10·827

Metallic alloys are much more easily oxidised than the separate metals, a phenomenon which may be ascribed to the increased affinity for oxygen which results from the tendency of the one of the oxides to combine with the other. An alloy of tin and lead heated to redness takes fire, and continues to burn for some time like a piece of bad turf.

Every alloy is, in reference to the arts and manufactures, a new metal, on account of its chemical and physical properties. A vast field here remains to be explored. Not above 60 alloys have been studied by the chemists out of many hundred which may be made; and of these but few have yet been practically employed. Very slight modifications often constitute valuable improvements upon metallic bodies. Thus, the brass most esteemed by turners at the lathe contains from 2 to 3 per cent. of lead; but such brass does not work well under the hammer; and, reciprocally, the brass which is best under the hammer is too tough for turning.

M. Chaudet has made some experiments on the means of detecting the metals of alloys by the cupelling furnace, and they promise useful applications. The testing depends upon the appearance exhibited by the metals and their alloys when heated on a cupel. The following were Chaudet's results: —

Metals.—Pure tin, when heated this way, fuses, becomes of a greyish-black colour, fumes a little, exhibits incandescent points on its surface, and leaves an oxide which,

Digitized by Google

when withdrawn from the fire, is at first lemon-yellow, but, when cold, white. Antimony melts, preserves its brilliancy, fumes, and leaves the vessel coloured lemon-yellow when hot, but colourless when cold, except a few spots of a rose tint. Zinc burns brilliantly, forming a cone of oxide; and the oxide, much increased in volume, is, when hot, greenish, but, when cold, perfectly white. Bismuth fumes, becomes covered with a coat of melted oxide, part of which sublimes, and the rest enters the pores of the cupel; when cold, the cupel is of a fine yellow colour, with spots of a greenish hue. Lead resembles bismuth very much; the cold cupel is of a lemon-yellow colour. Copper melts, and becomes covered with a coat of black oxide; sometimes spots of a rose tint remain on the cupel.

ALLOYS.—Tin 75, antimony 25, melt, become covered with a coat of black oxide, have very few incandescent points; when cold, the oxide is nearly black, in consequence of the action of the antimony; a $\frac{1}{200}$th part of antimony may be ascertained, in this way, in the alloy. An alloy of antimony containing tin leaves oxide of tin in the cupel: a $\frac{1}{100}$th part of tin may be thus detected. An alloy of tin and zinc gives an oxide which, whilst hot, is of a green tint, and resembles philosophers' wool in appearance. An alloy containing 99 tin 1 zinc did not present the incandescent points of pure tin, and gave an oxide of greenish tint when cold. Tin 95, bismuth 5 parts, gave an oxide of a grey colour. Tin and lead give an oxide of a rusty brown colour. An alloy of lead and tin, containing only 1 per cent. of the latter metal, when heated, does not expose a clean surface, like lead, but is covered at times with oxide of tin. Tin 75 and copper 25 gave a black oxide: if the heat be much elevated, the under part of the oxide is white, which is oxide of tin; the upper part is black, being the oxide of copper, and the cupel becomes of a rose colour. If the tin be impure from iron, the oxide produced by it is marked with spots of a rust colour.

The degree of affinity between metals may be in some measure estimated by the greater or less facility with which, when of different degrees of fusibility or volatility, they unite, or with which they can, after union, be separated by heat. The greater or less tendency to separate into differently proportioned alloys, by long-continued fusion, may also give some information upon this subject. Mr. Hatchett remarked, in his elaborate researches on metallic alloys, that gold made standard with the usual precautions, by silver, copper, lead, antimony, &c., and then cast, after long fusion, into vertical bars, was by no means an uniform compound; but that the top of the bar, corresponding to the metal at the bottom of the crucible, contained the larger proportion of gold. Hence, for a more thorough combination, two red-hot crucibles should be employed, and the liquefied metals should be alternately poured from the one into the other. To prevent unnecessary oxidisation from the air, the crucibles should contain, besides the metal, a mixture of common salt and pounded charcoal. The metallic alloy should also be occasionally stirred up with a rod of earthenware.

When there is a strong affinity between the two metals, their alloy is generally denser than the mean, and *vice versâ*. This is exemplified, as previously shown, in the alloys of copper with zinc and tin, on the one hand, and with copper and lead on the other. When one of the metals, however, is added in excess, there result an atomic compound and an indefinite combination, as would appear from Muschenbroek's experiments. Thus,

1	of lead with	4	of silver give a density of	10·480
1	do	2	do	11·032
1	do	3	do	10·831

The proportion of the constituents is on this principle estimated in France by the *test of the ball* applied to pewter; in which the weight of the alloyed ball is compared with that of a ball of pure tin or standard pewter cast in the same mould. Alloys possess the elasticity belonging to the mean of their constituents, and also the specific caloric.

According to M. Rudberg, while lead solidifies at 325° C., and tin at 228°, their atomic alloy solidifies at 187°, which he calls the fixed point, for a compound $Pb\,Sn^3$.

An alloy too slowly cooled is often apt to favour the crystallisation of one or more of its components, and thus to render it brittle; and hence an iron mould is preferable to one of sand when there is danger of such a result.

It is not a matter of indifference in what order the metals are melted together in making an alloy. Thus, if we combine 90 parts of tin and 10 of copper, and to this alloy add 10 of antimony; or if we combine 10 parts of antimony with 10 of copper, and add to that alloy 90 parts of tin, we shall have two alloys chemically the same; and still it will be easy to discover that, in other respects — fusibility, tenacity, &c. — they totally differ. Whence this result? Obviously from the nature of their combination, dependent upon the order pursued in the preparation, and which continues after the mixture. In the alloys of lead and antimony also, if the heat be raised in combining

Digitized by Google

the two metals together much above their fusing points, the alloy becomes harsh and brittle; probably because some alloy formed at that high temperature is not soluble in the mass.

In common cases the specific gravity affords a good criterion whereby to judge of the proportion of two metals in an alloy. But a very fallacious rule has been given in some respectable works for computing the specific gravity that should result from the alloying of given quantities of two metals of known densities, supposing no chemical condensation or expansion of volume to take place. Thus, it has been taught, that if gold and copper be united in equal weights, the computed specific gravity is merely the arithmetical mean between the numbers denoting the two specific gravities. Whereas, the specific gravity of any alloy must be computed by dividing the sum of the two weights by the sum of the two volumes, compared, for conveniency sake, to water reckoned unity. Or, in another form, the rule may be stated thus:—Multiply the sum of the weights into the products of the two specific-gravity numbers for a numerator; and multiply each specific-gravity number into the weight of the other body, and add the two products together for a denominator. The quotient obtained by dividing the said numerator by the denominator, is the truly computed mean specific gravity of the alloy. On comparing with that density the density found by experiment, we shall see whether expansion or condensation of volume has attended the metallic combination. Gold having a specific gravity of 19·36, and copper of 8·87, when they are alloyed in equal weights, give, by the fallacious rule of the arithmetical mean of the densities $\frac{19{\cdot}36 + 8{\cdot}87}{2} = 14{\cdot}11$; whereas the rightly computed density is only 12·16. It is evident that, on comparing the first result with experiment, we should be led to infer that there had been a prodigious condensation of volume, though expansion has actually taken place. Let W, w be the two weights; P, p the two specific gravities, then M, the mean specific gravity, is given by the formula

$$M = \frac{(W+w)\,Pp}{Pw + pW} \therefore 2\,\Delta = -\frac{(P-p)^2}{P+p} = \text{twice}$$

the error of the arithmetical mean; which is therefore always in excess.

Alloys of a somewhat complex character are made by Mr. Alexander Parkes, of Birmingham, of a white or pale colour, by melting together 33¼ lbs. of foreign zinc, 64 of tin, 1½ of iron, and 3 of copper; or 50 zinc, 48 tin, 1 iron, and 3 copper; or any intermediate proportion of zinc and copper may be used. The iron and copper are first melted together in a crucible, the tin is next introduced, in such quantities at a time as not to solidify the iron and copper; the zinc is added lastly, and the whole mixed by stirring. The flux recommended for this alloy is, 1 part of lime, 1 part of Cumberland iron ore, and 3 parts of sal ammoniac.

Another of his alloys is composed of 66 lbs. of foreign zinc, 33¼ tin, 3¼ antimony; or 70¾ zinc, 19¼ tin, and 2¾ antimony; or any intermediate proportions, and with or without arsenic. He uses black flux. When to be applied to the sheathing of ships, from 8 to 16 oz. of metallic arsenic are added to every 100 lbs. of alloy. A third class of alloys consists of equal parts of iron and nickel; the copper is next added, and lastly the zinc, or the copper and zinc, may be added as an alloy. 100 lbs. may consist of 45¼ lbs. of iron and nickel (*partes æquales*), and 10¼ lbs. of foreign zinc; or 30¾ lbs. of alloy of iron and nickel (*p. æ.*), 46 copper, and 26¼ zinc; or any intermediate proportions of zinc and copper. He uses also an alloy of 60 lbs. of copper, 20 of zinc, and 20 of silver; or 60 copper, 10 nickel, 10 silver, and 20 zinc; the copper and nickel being first fused together. His fifth alloy is called by him a non-conductor of heat! It is made of 25 nickel, 25 iron, and 50 copper; or 15 nickel, 25 iron, and 60 copper; the last being added after the fusion of the others.

It may prove convenient to give a general statement of the more striking peculiarities of the important alloys. More detailed information will be found under the heads of the respective metals.

Gold and Silver Alloys.— The British standard for gold coin is 22 parts pure gold and 2 parts alloy, and for silver, 222 parts pure silver to 18 parts of alloy.

The alloy for the gold is an indefinite proportion of silver and copper: some coin has a dark red-colour from the alloy being chiefly copper; the lighter the colour a larger portion of silver is indicated, sometimes even (when no copper is present) it approaches to a greenish tinge, but the proportion of pure gold is the same in either case.

The alloy for silver coinage is always copper; and a very pure quality of this metal is used for alloying, both for the gold and silver coinage, as almost any other

Digitized by Google

metal being present, even in very small quantities, would make the metals unfit for coinage, from rendering the gold, silver, and copper brittle, or not sufficiently malleable.

The standard for plate (silver) is the same as the coin, and requires the same quantity of copper, and carefully melting with two or three bits of charcoal on the surface while in fusion, to prevent the oxidation of the copper by heat and exposure to the atmosphere.

The gold standard for plate and jewellery varies, by a late act of Parliament, from the 22 carats pure, to 18, 12, and 9: the alloys are gold and silver, in various proportions according to the taste of the workmen; the colour of the articles manufactured depending, as with the coin, on the proportions; if no copper is used in qualities under 22 carats fine gold, the colour varies from a soft green to a greenish white, but a proportion of copper may be used so as to bring the colour to nearly that of 22 fine, 1 silver, and 1 copper.

Wire of either gold or silver may be drawn of any quality, but the ordinary wire for fine purposes, such as lace, contains from 5 to 9 pennyweights of copper in the pound of 240 pennyweights, to render it not so soft as it would be with pure silver.

Gold, silver, and copper may be mixed in any proportions without injury to the ductility, but no reliable scale of tenacity appears to have been constructed, although gold and silver in almost any proportions may be drawn to the very finest wire.

The alloys of silver and palladium may be made in any proportions; it has been found that even 3 per cent. of palladium prevents silver tarnishing so soon as without it; 10 per cent. very considerably protects the silver, and 30 per cent. of palladium will prevent the silver being affected by fumes of sulphuretted hydrogen unless very long exposed: the latter alloy has been found useful for dental purposes, and the alloy with less proportions—say 10 to 15 per cent.—has been used for graduated scales of mathematical instruments.

The alloy of platinum and silver is made for the same purposes as those of palladium, and, by proper care in fusion, are nearly equally useful, but the platinum does not seem to so perfectly combine with the silver as the palladium. Any proportion of palladium with gold injures the colour, and even 1 per cent. may be detected by sight, and 5 per cent. renders it a silver colour, while about 10 per cent. destroys it; but the ductility of the alloy is not much injured.

Gold leaf for gilding contains from 3 to 12 grains of alloy to the ounce. The gold used by respectable dentists is nearly pure, but necessarily contains about 6 grains of copper to the ounce troy, or $\frac{1}{40}$th part.

Antimony in the proportion of $\frac{1}{1920}$ quite destroys the ductility of gold.

Gold and platinum alloy forms a somewhat elastic metal. Hermstadt's imitation of gold consists of 16 parts of platinum, 7 parts of copper, and 1 of zinc, put in a crucible, covered with charcoal powder, and melted into a mass.—P. J.

Dentists' Alloy. For the ordinary purposes of mounting artificial teeth a peculiar metal is required. It must be sufficiently hard and tough, and it must not be liable to corrosion by either acid or acrid fluids. Experience has shown that an alloy of gold, silver, and copper most nearly meets all the required conditions. Dentists use 16-carat gold, which is $\frac{2}{3}$ fine gold and $\frac{1}{3}$ alloy, the alloy being always nearly equal portions of silver and copper, which is not, for these purposes, in the slightest degree injurious.—See AMALGAM.

COPPER ALLOYS.—Copper alloyed with zinc forms BRASS, and with tin we have BRONZE. (See those articles.) The best *Kingston's Metal* is an alloy of copper, tin, and mercury; it is much used for bearings. (See KINGSTON'S METAL.) The alloys of the ancients were usually either brasses or bronzes. The following analyses of ancient coins, &c., by Mr. John Arthur Phillips, are of great value.

It is not a little curious to find that some of the coins of high antiquity contain zinc, which does not appear to have been known as a metal before 1280 A.D., when Albertus Magnus speaks of zinc as a *semi-metal*, and calls the alloy of copper and zinc *golden marcasite*; or rather, perhaps, he means to apply that name to zinc, from its power of imparting a golden colour to copper. The probability is that calamine was known from the earliest times as a peculiar earth, although it was not thought to be an ore of zinc or of any other metal.—See "Watson's Chemical Essays."

Digitized by Google

	Date. B. C.	Date. A. D.	Copper.	Tin.	Lead.	Iron.	Zinc.	Silver.	Sulph.	Nickel.	Cobalt.
Æs	500	—	69·69	7·16	21·82	·47	—	—	trace	trace	·57
Semis	500	—	62·04	7·66	29·32	.18	—	—	trace	·19	·23
Quadrans	500	—	72·22	7·17	19·56	·40	—	—	trace	·20	·28
Hiero I.	470	—	94·15	5·49	—	·32					
Alexander the Great	335	—	86·77	12·99	—	—	—	—	·06		
Philippus III.	323	—	90·27	9·43							
Philippus V.	200	—	85·15	11·12	2·85	·42	—	—	trace		
Copper coin of Athens	?	—	88·34	9·95	·63	·26	—	—	—	trace	trace
Egyptian, Ptolemy IX.	70	—	84·21	15·64	—	trace	—	—	trace	—	trac
Pompey, First Brass	53	—	74·17	8·47	16·15	·29					
Coin of the Atilia Family	45	—	68·69	4·86	25·43	11	—	—	—	trace	trace
Julius and Augustus	42	—	79·13	8·00	12·81	trace	—	—	trace		
Augustus and Agrippa	30	—	78·45	12·96	8·62	trace	—	—	trace		
Large Brass of the Cassia Family	20	—	82·26	—	—	·35	17·31	—	trace		
Sword-blade	—	—	89·69	9·58	—	·33	—	—	trace		
Broken sword-blade	—	—	85·62	10·02	—	·44					
Fragment of a sword-blade	—	—	91·79	8·17	—	trace	—	—	trace		
Broken spear-head	—	—	99·71	—	—	—	—	—	·28		
Celt	—	—	90·68	7·43	1·28	trace	—	—	trace		
Celt	—	—	90·18	9·81	—	trace					
Celt	—	—	89·33	9·19	—	·33	—	—	·24		
Celt	—	—	83·61	10·79	3·20	·58	—	—	—	trace	·34
Large Brass of Nero	—	60	81·07	1·05	—	—	17·81				
Titus	—	79	83·04	—	—	·50	15·84				
Hadrian	—	120	85·67	1·14	1·73	·74	10·85				
Faustina, Jun.	—	165	79·14	4·97	9·18	·23	6·27				
Greek Imperial Samosata	—	212	70·91	6·75	21·96	trace					
Victorinus, Sen. (No. 1)	—	262	95·37	·99	trace	trace	—	1·60			
Victorinus, Sen. (No. 2)	—	262	97·13	·10	trace	1·01	—	1·76			
Tetrius, Sen. (No. 1)	—	267	98·50	·37	trace	·46	—	·76			
Tetrius, Sen. (No. 2)	—	268	98·00	·51	—	·05	—	1·15			
Claudius Gothicus (No. 1)	—	268	81·60	7·41	8·11	—	—	1·86			
Claudius Gothicus (No. 2)	—	268	84·70	3·01	2·67	·31	trace	7·93			
Tacitus (No. 1)	—	275	86·08	3·63	4·87	—	—	4·42			
Tacitus (No. 2)	—	275	91·46	—	—	2·31	—	5·92			
Probus (No. 1)	—	275	90·68	200	2·33	·61	1·39	2·24			
Probus (No. 2)	—	275	94·65	·45	45	·80	—	3·22			

Copper, when united with half its weight of lead, forms an inferior alloy, resembling gun-metal in colour, but is softer and cheaper. This alloy is called *pot-metal* and *cock-metal*, because it is used for large measures and in the manufacture of taps and cocks of all descriptions.

Sometimes a small quantity of zinc is added to pot-metal; but when this is considerable the copper seizes the zinc to form brass, and leaves the lead at liberty, a large portion of which separates on cooling. Zinc and lead are not disposed to unite; but a little arsenic occasions them to combine.

Of the alloys of copper and lead, Mr. Holtzapffel gives the following description:—

LEAD ALLOYS. — Two ounces lead to one pound copper produces a red-coloured and ductile alloy.

Four ounces lead to one pound copper gives an alloy less red and ductile. Neither of these is so much used as the following, as the object is to employ as much lead as possible.

Six ounces lead to one pound copper is the ordinary pot-metal, called *dry pot-metal*, as this quantity of lead will be taken up without separating on cooling; this alloy is brittle when warmed.

Seven ounces lead to one pound copper forms an alloy which is rather short, or disposed to break.

Eight ounces lead to one pound copper is an inferior pot-metal, called *wet* pot-metal, as the lead partly oozes out in cooling, especially when the new metals are mixed; it is therefore always usual to fill the crucible in part with old metal, and to add new for the remainder. This alloy is very brittle when slightly warmed. More lead can scarcely be used, as it separates on cooling.

Antimony twenty parts and lead eighty parts form the printing-type of France; and lead and antimony are united in various proportions to form the type-metal of our printers. See TYPE-METAL.

Mr. James Nasmyth, in a letter to the "Athenæum" (No. 1176, p. 511), directed attention to the employment of lead, and its fitness as a substitute for all works of art hitherto executed in bronze or marble. He says the addition of about 5 per cent. of antimony to the lead will give it, not only great hardness, but enhance its capability to run into the most delicate details of the work.

Baron Wetterstedt's patent sheathing for ships consists of lead, with 2 to 8 per cent. of antimony; about 3 per cent. is the usual quantity. The alloy is rolled out into sheets.—*Holtzapffel.* We are not aware that this alloy has ever been employed.

Digitized by Google

Emery wheels and grinding tools for the lapidary are formed of an alloy of antimony and lead.

Organ pipes are sometimes made of lead and tin, the latter metal being employed to harden the lead. The pipes, however, of the great organ in the Town Hall at Birmingham are principally made of sheet zinc.

Lead and arsenic form shot-metal. The usual proportions are said to be 40 lbs. of metallic arsenic to one ton of lead.

Tabular Statement of the Physical Peculiarities of the Principal Alloys, adopted, with some alterations, from the "Encyclopédie Technologique."

BRITTLE METALS.		
ARSENIC.	ANTIMONY.	BISMUTH.
With ZINC, rendering it brittle.	This alloy is very brittle.	Unknown.
With IRON and STEEL, hardening, whitening, and rendering those metals susceptible of a fine polish: much used for steel chains and other ornaments.	30 of iron and 70 of antimony are fusible; very hard, and white. An alloy of two of iron and one of antimony is very hard and brilliant.	Doubtful.
With GOLD, a grey metal, very brittle.	Forms readily a pale-yellow alloy, breaking with a fracture like porcelain.	Similar to antimony; of a yellow-green colour.
With COPPER. Composed of 62 parts of copper and 32 arsenic, a grey, brilliant, brittle metal. Increasing the quantity of copper, the alloy becomes white and slightly ductile: used in the manufacture of buttons under the name of white copper, or TOMBAC.	Alloys readily: the alloys are brittle. Those formed with equal parts of the two metals are of a fine violet colour.	Pale-red brittle metal.
With SILVER. 23 of silver and 14 arsenic form a greyish-white brittle metal.	These have a strong affinity; their alloys are always brittle.	Alloys brittle and lamellated.
With LEAD. Arsenic renders lead brittle. The combination is very intimate; not decomposed by heat.	Antimony gives hardness to lead. 24 parts of antimony and 76 of lead, corresponding to Pb^2Sb, appear the point of saturation of the two metals.	The alloys of bismuth and lead are less brittle and more ductile than those with antimony; but the alloy of 3 parts of lead and 2 of bismuth is harder than lead. These alloys are very fusible.
With TIN. Brittle, grey, lamellated; less fusible than tin.	The alloys of antimony and tin are very white. They become brittle when the arsenic is in large quantity.	Tin and bismuth unite in all proportions by fusion. All the alloys are more fusible than tin.
With MERCURY. Without interest.	A gritty white alloy.	Mercury dissolves a large quantity of bismuth without losing its fluidity; but drops of the alloy elongate, and form a tail.

Digitized by Google

DUCTILE METALS.			
IRON.	GOLD.	COPPER.	SILVER.
With ZINC. See GALVANISED IRON.	A greenish-yellow alloy, which will take a fine polish.	See BRASS.	Silver and zinc combine easily, forming a somewhat brittle alloy.
With IRON or STEEL.	Gold and iron alloy with ease, and form yellowish alloys, varying in colour with the proportions of the metals. Three or four parts of iron united with one of gold is very hard, and is used in the manufacture of cutting instruments.	Iron and copper do not form true alloys. When fused together, the iron, however, retains a little copper.—Several methods for coating iron with copper and brass will be described.	When 1 of silver and 500 of steel are fused, a very perfect button is formed.— *Stodart and Faraday.*
With GOLD - -	- - - - - - -	Copper and gold alloy in all proportions, the copper giving hardness to the gold. This alloy is much used in coin and in the metal employed in the manufacture of jewellery.	Gold and silver mix easily together; but they do not appear to form a true combination. Jewellers often employ *l'or vert*, which is composed of 70 parts of gold and 30 of silver, which corresponds very nearly to the alloy possessing the maximum hardness.
With COPPER -	- - - - - - -	- - - - -	Silver and copper alloy in all proportions. These alloys are much used in the arts. The maximum hardness appears to be produced when the alloy contains a fifth of copper.
With LEAD, does not appear to form any alloy.	A very brittle alloy. A thousandth pt. of lead is sufficient to alter the ductility of gold.	Do not appear to form a true alloy.	Unite in all proportions; but a very small quantity of lead will greatly diminish the ductility of silver.
With TIN. A very little iron diminishes the malleability of tin, and gives it hardness.	The alloys of gold and tin are brittle; they preserve, however, some ductility when the proportion of tin does not exceed $\frac{1}{12}$.	Of great importance. See BRONZE.	Alloys readily. A very small quantity of tin destroys the ductility of silver.
With MERCURY. Mercury has no action on iron.	Mercury has a most powerful action on gold. See AMALGAM.	An amalgam which is formed with difficulty, and without interest.	The amalgamation of these two metals is a little less energetic than between mercury and gold. See AMALGAMATION.

Digitized by Google

In addition to these, the alloys of iron appear of sufficient importance to require some further notice.

IRON and MANGANESE. Mr. Mushet concludes, from his experiments, that the maximum combinations of manganese and iron is 40 of the former to 100 of the latter. The alloy 71·4 of tin and 28·6 of manganese is indifferent to the magnet.

IRON and SILVER; STEEL and SILVER.—Various experiments have been made upon alloys of iron and steel with other metals. The only alloys to which sufficient importance has been given are those of iron and silver and steel and silver. M. Guyton states, in the "Annales de Chimie," that he found iron to alloy with silver in greater quantity than the silver with the iron. "Iron can," he says, "therefore no longer be said to refuse to mix with silver; it must, on the contrary, be acknowledged that those two metals, brought into perfect fusion, contract an actual chemical union; that, whilst cooling, the heaviest metal *separates for the greatest part;* that notwithstanding each of the two metals retains a portion of the other, as is the case in every liquation, that the part that remains is not simply mixed or interlaid, but chemically united; lastly, that the alloy in these proportions possesses peculiar properties, particularly a degree of hardness that may render it extremely useful for various purposes."

The experiments of Faraday and Stodart on the alloys of iron and steel are of great value; the most interesting being the alloy with silver. The words of these experimentalists are quoted:—

"In making the silver alloys, the proportion first tried was 1 silver to 160 steel; the resulting buttons were uniformly steel and silver in fibres, the silver being likewise given out in globules during solidifying, and adhering to the surface of the fused button; some of these, when forged, gave out more globules of silver. In this state of mechanical mixture the little bars, when exposed to a damp atmosphere, evidently produced voltaic action; and to this we are disposed to attribute the rapid destruction of the metal by oxidation, no such destructive action taking place when the two metals are chemically combined. These results indicated the necessity of diminishing the quantity of silver, and 1 silver to 200 steel was tried. Here, again, were fibres and globules in abundance; with 1 to 300 the fibres diminished, but still were present; they were detected even when 1 to 400 was used. The successful experiment remains to be named. When 1 of silver to 500 steel were properly fused, a very perfect button was produced; no silver appeared on its surface; when forged and dissected by an acid, no fibres were seen, although examined by a high magnifying power. The specimen forged remarkably well, although very hard; it had in every respect the most favourable appearance. By a delicate test every part of the bar gave silver. This alloy is decidedly superior to the very best steel; and this excellence is unquestionably owing to a combination with a minute quantity of silver. It has been repeatedly made, and always with equal success. Various cutting tools have been made from it of the best quality. This alloy is, perhaps, only inferior to that of steel and rhodium, and it may be procured at small expense; the value of silver, where the proportion is so small, is not worth naming; it will probably be applied to many important purposes in the arts."

Messrs. Faraday and Stodart show from their researches that not only silver, but platinum, rhodium, gold, nickel, copper, and even tin, have an affinity for steel sufficiently strong to make them combine chemically.

IRON and NICKEL unite in all proportions, producing soft and tenacious alloys. Some few years since, Mr. Nasmyth drew attention to the combination of silicon with steel. Fresh interest has been excited in this direction by the investigations of a French chemist, M. St. Claire Deville, who has examined many of the alloys of silicon. For other alloys of iron, see IRON.

SILICON and IRON combine to form an alloy which is a sort of fusible steel in which carbon is replaced by silicon. The siliciurets are all of them quite homogeneous, and are not capable of being separated by liquation.

COPPER and SILICON united in various proportions, according to the same chemist. A very hard, brittle, and white alloy, containing 12 per cent. of silicon, is obtained by melting together three parts silico-fluoride of potassium, one part sodium, and one part of copper, at such a temperature that the fused mass remains covered with a very liquid scoria. The copper takes up the whole of the silicon, and remains as a white substance less fusible than silicon, which may serve as a base for other alloys. An alloy with 5 per cent. silicon has a beautiful bronze colour, and will probably receive important applications.

Mr. Oxland and Mr. Truran have given, in "Metals and their Alloys," the following useful tabular view of the composition of the alloys of copper. In addition to those given, the alloy of copper and aluminium is now most important. See ALUMINIUM BRONZE.

Digitized by Google

The principal alloys of copper with other metals are as follows:—

	Copper.	Zinc.	Tin.	Nickel.	Antimony.	Lead.
Antique bronze sword	87·000	- -	13·000			
„ springs	97·000	- -	3·000			
Bronze for statues	91·400	5·530	1·700	- -	- -	1·370
„ for medals	90·000	- -	10·000			
„ for cannon	90·000	- -	10·000			
„ for cymbals	78·000	- -	22·000			
„ for gilding	82·257	17·481	0·238	- -	- -	0·024
„ „	80·000	16·500	2·500	- -	- -	1·000
Speculum metal	66·000	- -	33·000			
Brass for sheet	84·700	15·300				
Gilding metal	73·730	27·270				
Pinchbeck	80·200	20·000				
Prince's metal	75·000	25·000				
„ „	50·000	50·000				
Dutch metal	84·700	15·300				
English wire	70·290	29·260	0·17	- -	- -	0·28
Mosaic gold	66·000	33·000				
Gun metal for bearings, stocks, &c.	90·300	9·670	0·03			
Muntz's metal	60·000	40·000				
Good yellow brass	66·000	33·000				
Babbitt's metal for bushing	8·300	- -	83·00	- -	8·3	
Bell metal for large bells	80·000	- -	20·00			
Britannia metal	1·000	2·00	81·00	- -	16·00	
Nickel silver, English	60·000	17·8	- -	22·2		
„ „ Parisian	50·000	13·6	- -	19 3		
German silver	50·000	25·0	- -	25·0		

ALLOY, NATIVE. OSMIUM and IRIDIUM, in the proportions of 72·9 of the former and 24·5 of the latter. See OSMIUM, IRIDIUM.

ALLSPICE. Pimento, or Jamaica pepper, so called because its flavour is thought to comprehend the flavour of cinnamon, cloves, and nutmegs. The tree producing this spice (*Eugenia pimenta*) is cultivated in Jamaica in what are called Pimento walks. It is imported in bags, almost entirely from Jamaica. Mr. Montgomery Martin informs us that pimento was exported in one year (1837) from the different districts of Jamaica as follows. (See PIMENTO, PEPPER.)

Kingston and Old Harbour	6027 bags.
Morant Bay and Port Morant	141 „
Port Antonio	1259 „
Port Marva and Annotto Bay	3194 „
Falmouth, Rio Bueno, and St. Ann's Bay	28188 „
Montego Bay and Lucca	3106 „
Sav-la-Mar and Black River	3622 „

ALLUVIUM. (*Alluo*, to wash upon; or *alluvio*, an inundation.) Earth, sand, gravel, stones, and other transported matter which has been washed away, and thrown down—by rivers, floods, or other causes—upon land not *permanently* submerged beneath the waters of lakes or seas.—*Lyell.*

ALLYLAMINE. See ACRYLAMINE.

ALMANDINE, or iron-garnet, is a silicate of alumina and iron, combined in the following proportions: silica 36·3, alumina 20·56, protoxide of iron 43·2.

It occurs in Greenland, Ceylon and the Brazils; when cut and polished, it forms a beautiful gem.

The name is probably derived from the Alabandic carbuncles of Pliny, which were cut and polished at Alabande. See GARNET.

ALMOND. (*Amande*, Fr.; *Mandelus*, Germ.; *Amygdal communis.*) De Candolle admits five varieties of this species. *Aamara*, bitter almond; *A. dulcis*, sweet almond; *A. fragilis*, tender-shelled almond; *A. macrocarpa*, large-fruited almond; *A. persicoides*, peach almond. There are two kinds of almond usually employed, which do not differ in chemical composition, only that the bitter, by a curious chemical reaction of its constituents, generates in the act of distillation a quantity of volatile oil which contains hydrocyanic acid. Vogel obtained from bitter almonds 8·5 per cent. of

Digitized by Google

husks. After pounding the kernels, and heating them to coagulate the albumen, he procured, by expression, 28 parts of an unctuous oil, which did not contain the smallest particle of hydrocyanic acid. The whole of the oil could not be extracted in this way. The expressed mass, treated with boiling water, afforded sugar and gum, and, in consequence of the heat, some of that acid. The sugar constitutes 6·5 per cent. and the gum 3. The vegetable albumen extracted, by means of caustic potash, amounted to 30 parts: the vegetable fibre to only 5. The poisonous aromatic oil, according to Robiquet and Boutron-Charlard, does not exist ready-formed in the bitter almond, but seems to be produced under the influence of ebullition with water. These chemists have shown —

1st. That neither bitter almonds nor their residuary cake yield any volatile oil by pressure.

2nd: They yield no oil when digested in alcohol or in ether, though the volatile oil is soluble in both these liquids.

3rd. Alcohol extracts from bitter-almond cake, sugar, resin, and *amygdalin*; when the latter substance has been removed, the cake is no longer capable of furnishing the volatile oil by distillation.

4th. Ether extracts no amygdalin, and the cake left, after digestion in ether, yields the volatile oil by distillation with water; but alcohol dissolves out a peculiar white crystalline body, without smell, of a sweetish taste at first, and afterwards bitter, to which they gave the name of *amygdaline*. This substance does not seem convertible into volatile oil. — *Pereira*. See Watts' "Dictionary of Chemistry."

Sweet almonds, by the analysis of Boullay, consist of 54 parts of the bland almond oil, 6 of unerystallisable sugar, 3 of gum, 24 of vegetable albumen, 24 of woody fibre. 5 of husks, 3·5 of water, 0·5 of acetic acid, including loss. We thus see that sweet almonds contain nearly twice as much oil as bitter almonds do.

Three varieties are known in commerce.

1. *Jordan Almonds* which are the finest, come from Malaga. Of these there are two kinds; the one above an inch in length, flat, with a clear brown cuticle, sweet, mucilaginous, and rather tough; the other more plump and pointed at one end, brittle, but equally sweet with the former.

2. *Valentia almonds* are about three-eighths of an inch broad, not quite an inch long, round at one end, and obtusely pointed at the other, flat, of a dingy brown colour and dusty cuticle.

3. *Barbary and Italian almonds* resemble the latter, but are generally smaller and less flattened. — *Brande, Dictionary of Pharmacy.*

Our *Importation* of ALMONDS in 1863 was as follows:—

Sweet Almonds, 34,358 cwt., valued at 109,595*l.*; and of Bitter Almonds 11,312 cwt., valued at 22,624*l.*

ALMOND OIL, BITTER. *Oil of bitter almonds. Essential oil of bitter almonds.* (*Oleum Amygdalæ Amaræ*).

After the fixed oil has been expressed from the bitter almonds, the residual cake is mixed with water and distilled. A volatile oil comes over. It has been convincingly proved that this fine-flavoured essential oil is produced during the process, by some decomposition of the amygdalin and the emulsin of the seeds. It is highly poisonous, owing to the presence of hydrocyanic acid. See BENZOIC ACID, BENZOLE, &c.

ALMOND OIL, SWEET. A bland fixed oil, obtained by expression from bitter or sweet almonds—usually from the former, on account of their cheapness as well as the greater value of the residual cake. The average produce is from 48 to 52 lbs. from 1 cwt. of almonds.

This is commonly known as *Oil of sweet almonds*, the *Oleum Amygdalæ* of the Pharmacopœia. When first obtained it is opaque, and of a yellow colour; but it speedily becomes quite transparent, and is bleached by exposure to light. This oil has a bland taste, and does not congeal at a temperature which solidifies olive-oil. It is often sold for nut-oil, which is supposed to possess this property of remaining fluid in an eminent degree.

ALMOND POWDER (*farina amygdalæ*) is the ground almond-cake; it is employed for washing the hands, and as a lute.

ALOE. (*Aloës*, Fr.; *Glauindes aloe*, Germ.) In botany a genus of the class *Hexandria monogynia*. There are many species, all natives of warm climates.

In Africa the leaves of the Guinea aloe are made into durable ropes. Of one species are made lines, bowstrings, stockings, and hammocks; the leaves of another species are used to hold rainwater. A series of trials has been made, within a few years, in Paris, to ascertain the comparative strength of cables made of hemp and of the aloe from Algiers; and they are said to have all turned to the advantage of the

Digitized by Google

aloe. Of cables of equal size, that made of aloe raised a weight of 2,000 kilogrammes (2 tons nearly), that made of hemp a weight of only 400 kilogrammes.—*Ure.*

The following varieties of the inspissated juices of the Aloe—called ALOES, and often BITTER ALOES—are known in commerce: *Socotrine, Hepatic, Barbados, Cape, Mocha, Catalline, and Indian.* The Socotrine Aloes are regarded as the best kind, but that from Barbados is the most abundant, and much of it is sold as Socotrine. The Barbados Aloes are imported from Barbados or Jamaica, usually in gourds weighing from 60 to 70 pounds, but sometimes in boxes holding about half a hundredweight.

Our importation of aloes and their declared value, in 1863, has been:

	lbs.	Per Cwt. £ s. d.	£
From Egypt	18,947	5 0 0	846
South Africa	449,395	2 4 11	8,823
India and Ceylon	189,356	7 4 8	12,231
British West Indies	29,669	10 0 0	2,650
Other parts	20,938	6 2 5	1,145
	699,305		25,695

A patent was taken (January 27, 1847) for certain applications of aloes to dyeing. Although it has not been employed, the colouring matter so obtained promising to be very permanent and intense, it is thought advisable to describe the process by which it is proposed to prepare the dye. It is as follows:—

Into a boiler or vessel capable of holding about 100 gallons, the patentee puts 10 gallons of water, and 132 lbs. of aloes, and heats the same until the aloes are dissolved; he then adds 80 lbs. of nitric or nitrous acid in small proportions at a time, to prevent the disengagement of such a quantity of nitrous gas as would throw part of the contents out of the boiler. When the whole of the acid has been introduced, and the disengagement of gas has ceased, 10 lbs. of liquid caustic soda, or potash of commerce, of about 30°, are added to neutralise any undecomposed acid remaining in the mixture, and to facilitate the use of the mixture in dyeing and printing. If the colouring matter is required to be in a dry state, the mixture may be incorporated with 100 lbs. of china-clay and dried in stoves, or by means of a current of air. The colouring matter is used in dyeing by dissolving a sufficient quantity of water, according to the shade required, and adding as much hydrochloric acid or tartar of commerce as will neutralise the alkali contained in the mixture, and leave the dye-bath slightly acidulated. The articles to be dyed are introduced into the bath, which is kept boiling until the desired shade is obtained.

When the colouring matter is to be used in printing, a sufficient quantity is to be dissolved in water, according to the shade required to be produced; this solution is to be thickened with gum, or other common thickening agent, and hydrochloric acid, or tartar of commerce, or any other suitable supersalt, is to be added thereto. After the fabrics have been printed with the colouring matter, they should be subjected to the ordinary process of steaming, to fix the colour.—*Napier.*

ALOETIC ACID. The colouring matter of the aloes depends on this acid, which has been examined by Schunck and Mulder. Aloetic acid is deposited, from nitric acid which has been heated with aloes, as a yellow powder: it dissolves in ammonia with a violet colour; when treated with protochloride of tin it forms a dark-violet heavy powder; and this again, when treated with potash, evolves ammonia, and assumes a violet-blue colour. This solution of aloetic acid in ammonia is violet.

ALPACA. (*Alpaga*, Fr.) An animal of Peru, of the Llama species; also the name given to a woollen fabric woven from the wool of this animal, or a mixture of silky goats' hair with the harsher fibre of sheeps' wool. See LLAMA.

ALUDEL. The aludels of the earlier chemists were a series of pear-shaped pots, generally made of earthenware, but sometimes of glass, open at both ends. Each aludel had a short neck at top and bottom, so that a series of them could be fitted together, by means of the neck, in succession.

ALUM. (*Alun*, Fr.; *Alaun*, Germ.) A saline body or salt, consisting of alumina, or the peculiar earth of clay, united with sulphuric acid, and these again united with sulphate of potash or ammonia. In other words, it is a double salt, consisting of sulphate of alumina and sulphate of potash, or sulphate of alumina and sulphate of ammonia. The common alum crystallises in octahedrons, but there is a kind which takes the form of cubes. It has a sour or rather subacid taste, and is peculiarly astringent. It reddens the blue colour of litmus or red cabbage, and acts like an

Digitized by Google

acid on many substances. Other alkalis may take the place of the ammonia or potash, and other metals that of the aluminium.

Alum was known to the ancients, who used it in medicine, as it is now used, and also as a mordant in dyeing and calico printing, as at the present day. Old historians do not describe correctly, either the mode of obtaining it or its exact characteristics, so that it is confounded with sulphate of iron, with which it seems generally to have been mixed. But that some qualities were made with very little iron in it, is clear from the fact that it was employed when white for dyeing bright colours. (*Pliny*, xxxv. 15.) It is said by Pliny that the purchasers tested it with tannin (pomegranate juice), in order to see if it blackened. He says that the white kind blackened as well as the black; but in all probability this was a test applied by the dyers to see which blackened least, so as to obtain a good mordant for reds. Pliny's description, although confused, leaves this fact perfectly clear — that there were men in whose minds the knowledge was much clearer than in his, or a manufacture of such magnitude could not have existed. There is mention of some being made from stone, and crystallising in fine hairs, but the characteristics given do not enable us to decide that this was either alum or the peculiar sulphate of alumina which takes that form. The alum was sometimes boiled down to dryness, and heated till it was spongy or like pumice-stone. It was used as burnt alum.

They used it also for preventing the combustibility of wood and wooden buildings. But although the knowledge of it was very accurate, their writers always imagine that sulphate of iron was a kind of alum, because it is said that the black alum was used for dyeing dark colours. They used iron as a mordant, and found its character by galls or by pomegranate juice, which contains tannin. Their alum was chiefly a natural production, and they removed the fine efflorescing crystals which first appeared, or which gradually are raised above the rest, as the finest kind. "It was produced in Spain, Egypt, Armenia, Macedonia, Pontus, and Africa; the islands Sardinia, Melos, Lipari and Stromboli. The best was got in Egypt, the next in Melos." The word is probably Egyptian, as it was best and most abundantly obtained in Egypt. It is not probable that it was the double salt in all cases, but simply a sulphate of alumina. Pliny, indeed, says that a substance called in Greek Τυρά, or watery, probably from its very soluble nature, and which was milk-white, was used for dyeing wool of bright colours. This may have been the mountain butter of the German mineralogists, which is a native sulphate of alumina, of a soft texture, waxy lustre, and unctuous to the touch. The *stypteria* of Dioscorides and the *alumen* of Pliny comprehended, no doubt, a variety of saline substances besides sulphate of iron and alum.

It seems to have come to Europe in later times as alum of Rocca, the name of Edessa, or that place where the Italians first learnt the art; but it is not impossible that this name was an Italian prefix, which has remained to this day under the form of Rock alum, *Rotzalaun* and *Alun de Roche*. The East has always had some manufactures of it, and Phocis, Lesbos, and other places, were able to supply the Turks with alum for their magnificent Turkey red. It was also made at Foya Nova, near Smyrna, and at Constantinople. The Genoese and other trading people of Italy imported alum into Western Europe for the use of the dyers of red cloth.

A Genoese merchant, Bartholomew Perdix, who had been in Syria, observed a stone suitable for alum in the island Ischia; he burnt it, and obtained a good result, being the first who introduced the manufacture into Europe. This was in the year 1459; about the same time John di Castro learnt the method at Constantinople, and manufactured alum at Tolfa. This discovery of the mineral near Civita Vecchia was considered so important by John di Castro, that he announced it to the Pope as a great victory over the Turks, who annually took from the Christians 300,000 pieces of gold for their dyed wool. A statue was erected to the "Discoverer of Alum."—*Beckman*.

The manufacture of alum was then made a monopoly of the Papal Powers, and instead of buying it as before from the East, it was considered Christian to obtain it only from the States of the Church, and, as such, was made compulsory in the West. The manufacture then went to Spain, to a spot near Carthagena. Germany began so early as 1554 to make alum, although Basil Valentine seems to have known of its existence there somewhat sooner. The first establishment known was at Oberkaufungen in Hesse-Cassel, where it still exists. It was not introduced as a manufacture into England until the year 1600, when Sir Thomas Chaloner, the son of queen Elizabeth's minister of that name, found that his own estate of Guisborough, in Yorkshire, contained alum. This he is said first to have observed from the vegetation, which had a very weak green. Di Castro had first been led to it by the appearance of the holly, but neither can be said to be decisive tests of its presence, nor are the geological features of Tolfa and Guisborough at all like. The violent denunciations of the Pope

Digitized by Google

did not prevent the manufacture from growing to unexpected magnitude in England. The mines of the same district have ever since sent out alum, which is now known as Whitby alum, and even those at Guisborough itself are now at work, although for seventy years of the period since their discovery they were disused. The manufacture was begun at Hurlet, in Scotland, by Nicholson and Lightbody, in 1766, abandoned, and resumed by Macintosh and Wilson in 1797.

The composition of alum is expressed by chemists in the following manner: $Al^2O^3\ 3SO^3\ KOSO^3\ 24HO$. This peculiar combination is that of the original substance as far as it appeared to the chemists of last century, and the form is now held as a type, after which many other alums are composed. Ammonia-alum was occasionally made, even as early as Agricola's time, 16th century. Its composition is $Al^2O^3\ 3SO^3\ NH^4OSO^3 + 24HO$. The same thing occurs with soda; soda-alum is $Al^2O^3\ 3SO^3\ NaOSO^3 + 24HO$. Every salt having this form is called an alum. Sometimes, instead of the alkali being changed, the earth is changed. Thus we have chrome-alum, $Cr^2O^3 3SO^3\ KOSO^3 + 24HO$; or we have an iron-alum, $Fe^2\ O^3\ 3SO^3\ KOSO^3 + 24HO$. These may be varied to a great extent, but all have a characteristic of alum. The twenty-four atoms of water are one of the peculiar characteristics.

Composition of pure Potash Alum.

	Per Cent.				Per Cent.			
Potash - -	9·89	or 1	atom	47	Sulphate of potash -	18·32	or 1 atom	27
Alumina -	10·94	„ 1	„	52	Sulphate of alumina -	36·21	„ 1 „	172
Sulphuric acid	33·68	„ 4	„	160	Water - - -	45·48	„ 1 „	216
Water - -	45·49	„ 24	„	216				

Its specific gravity is 1·724.

100 parts of water dissolve, at	32	degrees Fahrenheit,	3·29	alum.
„	„	50	„	„	9·52	„
„	„	86	„	„	22·01	„
„	„	122	„	„	30·92	„
„	„	158	„	„	90·67	„
„	„	212	„	„	357·48	„

These Tables of Poggiale should be re-examined, and gradations made more useful for this country.

Solubility.—1 part of crystallised potash alum is soluble—

At	54	degrees Fahrenheit in	13·3	water.
„	70	„	„	8·2	„
„	77	„	„	4·5	„
„	100	„	„	2·2	„
„	122	„	„	2·0	„
„	145	„	„	0·4	„
„	167	„	„	0·1	„
„	189·5	„	„	0·06	„

A solution saturated at 46° is 1·045 specific gravity. This difference in the rate of solubility in hot and cold water renders it easily separated from many other salts. The crystals are permanent in the air, or nearly so, unless the air be very dry; if kept at 180° they lose 18 atoms of water, but alum deprived of its water and exposed to the air of summer took up 18 atoms in 47 days. It melts at a low temperature in its water of crystallisation. At 356° it loses 43·5 per cent. of water, or 23 atoms; the last atom is only lost when approaching red heat. At a red heat the sulphate of alumina loses its acid, and the alumina seems then able to remove some acid from the potash, losing it again by heat. Alum, when heated with common salt, acts like sulphuric acid, and gives off muriatic acid; the same with chlorides of potassium and ammonium. If boiled with a saturated solution of chloride of potassium, hydrochloric acid is formed and a subsulphate of alumina falls down; this occurs only to a small extent with chloride of sodium, and still less with sal-ammoniac.

Ammonia Alum contains:—

Ammonia - - - - - - -	3·75 per cent.
Alumina - - - - - - -	11·34 „
Sulphuric acid - - - - - -	35·29 „
Water - - - - - - - -	49·62 „
	100·00

This salt also occurs in octahedrons, and can only be known from potash-alum by trial. The addition of caustic lime, soda, or potash gives out the ammonia, easily distinguished by the smell. Soda-alum is not an article of commerce, nor is it used

Digitized by Google

in the arts. The addition of ammonia to a solution of alum, or the addition of any other alkali, in insufficient quantity, causes a precipitate, not of pure alumina, as one might suppose, but of a subsulphate of alumina. Even an excess of alkali will not remove all the sulphuric acid without heat being applied; an excess, on the other hand, is apt to dissolve some of the alumina, especially if few salts are present, and the solution not much boiled. Sulphide of ammonium precipitates it thoroughly.

Ammonia-alum readily loses all its ammonia when heated, and the sulphuric acid may be driven off the remaining sulphate of alumina, so that the pure earth-alumina will remain.

In commerce ammonia- and potash-alums are sometimes found mixed.

Applications of Alum.—Alum is an astringent. Its immediate effect on man is to corrugate the fibres and contract the small vessels. It precipitates albuminous liquids and combines with gelatine. It causes dryness of the mouth and throat, and checks the secretions of the alimentary canal, producing constipation—in large quantities, nausea, vomiting, purging. It is given in lead colic, to convert the lead into sulphate of lead, and is used externally. Its principal use is in dyeing; calico-printers print it as a mordant; the cloth is then put into the dye, and the printed parts absorb the colour. Paper-makers use it in their size and bookbinders in their paste. It is used in tanning leather, and sometimes, both in Asia and Europe, it is used for precipitating rapidly the impurities of water. This is a dangerous process, unless there be a great amount of alkaline salts, such as carbonate of lime or soda, to neutralise the acid. It is extensively used in correcting the baking qualities of bad flour, for which the experience of many has decided that it is a valuable remedy; unfortunately, it is also used to make excellent flour whiter, when there is no need of its presence. Liebig says that lime is equally good, and of course much safer. From time immemorial it has been used to prevent the combustibility of wood and cloth.

Alum heated with charcoal or carbonaceous substances forms Homberg's phosphorus, which inflames spontaneously. It is composed of alumina, sulphide of potassium, and charcoal.

Roman Alum crystallises—partly in octahedrons, like other alums, partly in cubes. If these cubes are dissolved in water of about 110° F., the evaporated liquid gives crystals of common or octahedral alum. It was said that on heating it deposited subsulphate of alumina; but Loewel says that such crystals were impure, and he finds no real difference of composition. All that seems to be known with certainty is, that it is formed when there is a salt of alumina in solution with the alum containing more alumina than the neutral or common alum. This can very readily occur in the Roman alum, where there is a great excess of alumina in the alum-stone. The Roman alum is prized for its great freedom from iron; it was said by MM. Thenard and Roard to contain only $\frac{1}{2500}$th of sulphate of iron, whilst the ordinary alum contained $\frac{1}{1000}$th.

Burnt Alum, or dried alum, is made by gently heating alum till the water is driven off. The alum first melts in its water of crystallization, and is then dried. It has a stronger action than the hydrated crystals, and is a mild escharotic. It reabsorbs water.

Neutral Alum is a name sometimes given erroneously to alum which has had some of its acid neutralised by an alkali. It is in fact a basic salt of alumina, which may also be made by dissolving alumina in ordinary alum. It deposits a basic salt more readily than ordinary alum, and may be of service in some cases of printing. Properly speaking, the common alum is the neutral salt.

Testing of Alum.—Alum being generally in large crystals, any impurity is more readily seen; this is said to be the reason for keeping up the practice of making this substance instead of the sulphate of alumina alone, which is less bulky and fitted for nearly every purpose for which alum is used. But probably the ancient accidental discovery of the potash form has determined its use to the present day. Iron is readily found in it, by adding to a dilute solution ferrocyanide of potassium or prussiate of potash, which throws down Prussian-blue. A very delicate test is sulphuret of ammonium, which throws down both the alumina and iron, but the blacking of the precipitate depends on the amount of iron. The total amount of iron is got by adding pure caustic potash or soda till the solution is strongly alkaline, washing and filtering off the oxide. To look for lime, precipitate the alumina and iron by ammonia, boil and filter—the lime and magnesia are in the solution—add oxalate of ammonia; add tartaric acid to keep up the iron and alumina, make alkaline by ammonia, then precipitate the lime by oxalate of ammonia, filter, and precipitate the magnesia by a phosphate. Silica and insoluble basic sulphates are obtained by simply dissolving the alum in water and filtering. If silica, it is insoluble in acids; if a basic sulphate, it will dissolve in sulphuric acid, and the addition of sulphate of potash or ammonia will convert it into potash- or ammonia-alum.

Pure alum gives a white precipitate with ammonia, no precipitate with sulphuretted hydrogen gas, and no precipitate with oxalate of ammonia and ammonia, if tartaric acid be previously added.

Digitized by Google

In a saturated solution of tersulphate of alumina, the crystals of alum are almost insoluble.

If we dissolve alum in 20 parts of water, and drop this solution slowly into water of caustic ammonia till this be nearly, but not entirely, saturated, a bulky white precipitate will fall down, which, when properly washed with water, is pure aluminous earth or clay; and, dried, forms 10·94 per cent. of the weight of the alum. If this earth, while still moist, be dissolved in dilute sulphuric acid, it will constitute, when as neutral as possible, simple sulphate of alumina, which requires only two parts of cold water for its solution. If we now decompose this solution, by pouring into it water of ammonia, there appears an insoluble white powder, which is subsulphate of alumina, or basic alum, and contains three times as much earth as exists in the neutral sulphate. If, however, we pour into the solution of the neutral sulphate of alumina a solution of sulphate of potash, a white powder will fall if the solutions be concentrated, which is true *alum*; if the solutions be dilute, by evaporating their mixture, and cooling it, crystals of alum will be obtained.

When newly precipitated alumina is boiled in a solution of alum, a portion of the earth enters into combination with the salt, constituting an insoluble compound which falls in the form of a white powder. The same combination takes place, if we decompose a boiling hot solution of alum with a solution of potash, till the mixture appears nearly neutral by litmus-paper. This insoluble or basic alum exists native in the alum stone of Tolfa, near Civita Vecchia, and it consists, in 100 parts, of 19·72 parts of sulphate of potash, 61·99 basic sulphate of alumina, and 18·29 water. When this mineral is treated with a due quantity of sulphuric acid, it dissolves, and is converted into the crystallisable alum of commerce.

Its formula, according to Graham, is a basic alum, $HO\,SO^3 + 3(Al^2\,O^3\,SO^3) + 9HO$. By losing alumina it becomes the neutral salt.

Sulphate of Alumina.—The first step towards the production of alum is the sulphate of alumina. This is found in various proportions in alum stone. The pure mineral has the following composition:—

1 atom of alumina	- -	15·42 per cent.
3 atoms of sulphuric acid	-	35·99 „
18 atoms of water	- -	48·59 „
		100·

There are many analyses of natural specimens closely approaching this. It is found crystallised in a close mass of fine, white, flexible needles, of a feather or hair form, and has been, like a few other substances, called hair-salt. It is also found with various degrees of impurity, sometimes with a smaller amount of water. Knapp has collected the following list of analyses:—

Analyses of Natural Sulphate of Alumina or Feather Alum.

	Bonsdorff.		Hartwell.	Mill.	H. Rose.					Gübel.	Berthier.	Th. Thomson.		Herapath.
	Saidunbe Pasto.		Pyrenees, Island Mito.	Bogota.	Copiapoa, Chili.	Kolosenk, Bohemia.	Friedorff, Bonn.	Potschappel, Dresden.	Freienwalde.	Arvast.	Haugerth, Berg-grot.	Arden.	Campsie.	Adelaide, N. S. Wales.
Sulphuric acid.	35·68	36·400	40·31	29·00	36·97	35·82	37·380	35·710	35·637	58·58	12·9	35·872	40·425	35·63
Alumina -	14·98	16·000	14·98	15·0	14 63	15·57	14·867	12·778	11·227	38·75	41·5	14·645	10·485	17·09
Peroxide of iron.	...	0 004	...	1·2	2·58	...	...	...	...	...	...	0·500	8·530	0·04
Protoxide of iron.	...	...	...	...	...	...	2·463	0·667	0·718	+ So^3 2·78	...	...		Oxide of Copper.
Protoxide manganese.	...	...	...	...	...	...	...	1·018	0·307					
Potash -	...	...	0·26	...	...	...	0·215	0·324	0·430	...	...	...	1·172	
Soda - -	...	...	1·13	...	...	...	...	...	...	...	...	2·262		
Lime - -	...	0·002	...	...	...	...	0·149	0·640	0·449					
Magnesia	...	0 004	0·85	...	0·14	...	...	0·273	1·912					
Muriatic acid.	...	...	0·40											
Silica - -	...	...	1·13	3·0	1·37	...	...	..	0·430	...	3·5	0·100	...	0·50
Water -	49·34	46·600	40·94	51·8	44·64	48·61	45·164	47·022	48·847	...	42·1	46·378	36·295	46 70
	100·00	99·010	100·00	100·0	100·33	100·00	100·238	98·432	100·000	100 11	100·0	99·754	96·904	99·96

Digitized by Google

The manufacture of alum involves the making of sulphate of alumina in the first instance in all cases where potash is not present in the ore; for this reason the description of both is included in one article.

Ores or Raw Material.—The chief difficulty in manufacturing alum has been the solution of the alumina. This substance is generally combined with silica in such a strong combination, that even powerful acids cannot remove it without assistance. The older methods, however, took no notice of these difficulties, and obtained the alum more or less directly from nature. The method now practised at the Solfatara di Pozzuoli and the island Vulcano is simply to take the efflorescence and the earth containing it, wash it with water, and concentrate. But it very seldom contains a sufficient amount of potash to form alum. A salt of potash is then added, chiefly a carbonate. To transform this into a sulphate, a portion of the sulphate of alumina is decomposed. The use of a carbonate is a wasteful method of modern times; the ancients would have felt no difficulty, but boiled all down, and so obtained the whole alumina there. Their product, therefore, would have been basic sulphate of alumina, which it evidently was when this practice was resorted to. When they merely concentrated and then crystallised, they got pure alum; but they lost a great deal of their alumina.

At Tolfa the alum is obtained from a compact crystalline substance called alunite. The analysis of Cordier makes it a combination of alum with alumina. If treated with water only, it will not give out alum; but if moderately calcined, it breaks up, gives out a large amount of alum, and the liquid is then boiled down for crystallisation.

The following analyses show that some natural alum-ores contain a considerable amount of potash. As there is seldom enough of potash found, it must be added in the form of sulphate of potash or chloride of potassium :—

Sulphuric acid -	36·187 -	34·6 -	20·06
Alumina - -	35·105 -	40·0 -	39·70
Potash - - -	10·824 -	15·8 -	Lime 0·30
Water - - -	18·124 -	10·6 -	59·94
	100·240	100·0	120·00

These formations of alum are generally found where sulphurous gases are exhaled: under the action of which the rock is gradually decomposed.

It is not, however, found so rich in potash in the great majority of cases. The following are analyses of some other alum-stones :—

	Klaproth. Tolfa Alum Stone.	Klaproth. Beregszas Alum Stone.	Descotil. Montione.	Cordier. Mont d'Or.
Silica - - - - -	56·5	62·3	- -	28·4
Alumina - - - -	19·0	17·5	40·0	31·8
Sulphuric acid - - -	16·5	12·5	35·6	27·0
Potash - - - - -	4·0	1·0	13·8	5·8
Water - - - - -	3·0	5·0	10·0	3·7
Oxide of iron - - -	- -	- -	- -	1·4

When there is no silica, but only sulphuric acid, alumina, and potash, we have a natural alum, and in that case there is nothing to be done towards the manufacture. But it rarely happens that the constituents exist in a proportion to form the crystalline salt. There may be sulphate of alumina, hydrate of alumina, and some true alum, or sulphate of alumina and potash. This excess of hydrate of alumina forms, when united with the sulphate, a basic or insoluble sulphate of alumina, and nothing but the sulphate of potash becomes soluble. When the hydrate is heated the water escapes; the sulphate of alumina and potash are then capable of being washed out together, and alum is obtained. At Tolfa it is obtained in crystals, covered over with a light red powder of peroxide of iron. This reddish covering always accompanies the Roman or partly cubical alum, and it has been sometimes added in order to give common alum the appearance of the Roman.

As the principal difficulty in the manufacture of alum is the solution of the alumina, it is unfortunate that so much of the hydrate is destroyed, as in the process mentioned, when sulphuric acid would readily dissolve it and greatly increase the produce. By the method described to us the measure of alum is simply the amount of the potash. All that cannot find potash to unite with is lost.

Digitized by Google

M. Cordier gives the following as a specimen of one of the alum stones from which the alum is made at Tolfa:—

Sulphate of potash	18·53
Sulphate of alumina	38·50
Hydrate of alumina	42·97

To transform this compound into alum, it is necessary merely to remove the alumina. The ordinary aluminous stone, however, is rarely so pure as the above analysis would show.

Occasionally ammonia-alum is found in nature. Analyses have been made of specimens from Tschermig, in Bohemia, by Stromeyer:—

Alumina	11·602	Sulphate of alumina	38·688
Ammonia	3·721	Sulphate of ammonia	12·478
Magnesia	0·115	Sulphate of magnesia	0·337
Sulphuric acid	36·065	Water	48·390
Water	48·390		99·893
	99·893		

Soda-alum is also found naturally.

Alum from Peru, by T. Thomson.

Sulphate of soda	6·50
Alumina	22·55
Sulphuric acid	32·95
Water	39·20
	101·20

From the Andes.

Sulphuric acid	36·199
Alumina	11·511
Soda	7·259
Water	43·819
Silica	0·180
Lime	0·255
Peroxide of iron	0·199
Protoxide of iron	0·760
	100·162

Alum occurs ready formed in nature in the alum stones of Italy, &c., as an efflorescence on stones, and in certain mineral waters in the East Indies. The alum of European commerce is manufactured artificially, either from the alum schists or stones, or from clay. The mode of manufacture differs according to the nature of these earthy compounds. Some of them, such as the alum stone, contain all the elements of the salt, but mixed with other matters, from which it must be freed. The schists contain only the elements of two of the constituents, namely, clay and sulphur, which are convertible into sulphate of alumina, and this may be then made into alum by adding the alkaline ingredient. To this class belong the alum slates, and other analogous schists, containing brown coal.

1. *Manufacture of Alum from the Alum Stone.*—The alum stone is a rare mineral, being found in moderate quantity at Tolfa, and in larger in Hungary, at Beregszaz, and Muszag, where it forms entire beds in a hard substance, partly characterised by numerous cavities, containing drusy crystallisations of alum stone or basic alum. The larger lumps contain more or fewer flints disseminated through them, and are, according to their quality, either picked out to make alum, or thrown away. The sorted pieces are roasted or calcined, by which operation apparently the hydrate of alumina, associated with the sulphate of alumina, loses its water and its affinity for alum. It becomes, therefore, free; and during the subsequent exposure to the weather the stone gets disintegrated, and the alum becomes soluble in water.

The calcination is performed in common lime kilns in the ordinary way. In the regulation of the fire it is requisite, here, as with gypsum, to prevent any fusion or running together of the stones, or even any disengagement of sulphuric or sulphurous acids, which would cause a corresponding diminution in the produce of alum. For this reason the contact of the ignited stones with carbonaceous matter ought to be avoided.

The calcined alum stones, piled in heaps from 2 to 3 feet high, are to be exposed to the weather, and meanwhile they must be continually kept moist by sprinkling

Digitized by Google

them with water. As the water combines with the alum the stones crumble down, and fall, eventually, into a pasty mass, which must be lixiviated with warm water, and allowed to settle in a large cistern. The clear supernatant liquor, being drawn off, is to be evaporated, and then crystallised. A second crystallisation finishes the process, and furnishes a marketable alum. Thus the Roman alum is made, which is covered with a fine red film of peroxide of iron.

Sulphate of alumina occurs sometimes in union with sulphate of iron. In the Hurlet and Campsie coal beds a salt has been found with a variable composition, of which four specimens are here given.

	Berthier.	Phillips.	R. D. Thomson.	
Sulphuric acid - - - -	34·4	30·9	35·60	28·635
Protoxide of iron - - - -	12·0	20·7	13·56	19·935
Alumina - - - - -	8·8	5·2	7·127	2·850
Magnesia - - - - -	0·8			
Water - - - - - -	44·0	43·2	43·713	48·580
	100·0	100·0	100·000	100·000

This was a kind of feather alum or hair salt.

2. *Alum Manufacture from Alum Schist.*—The greater portion of the alum found in British commerce is made from alum slate and analogous minerals. This slate contains more or less iron pyrites, mixed with coaly or bituminous matter, which is occasionally so abundant as to render the schist somewhat combustible. In the strata of brown coal and bituminous wood, where the upper layers lie immediately under clay beds, they consist of the coaly substance rendered impure with clay and pyrites. This triple mixture constitutes the essence of all good alum schists, and it operates spontaneously towards the production of sulphate of alumina. The coal, besides burning, serves to make the texture open, and to allow the air and moisture to penetrate freely, so as to change the sulphur and iron present into acid and oxide. When these schists are exposed to a high temperature in contact with air, the pyrites loses one half of its sulphur, in the form of sublimed sulphur or sulphurous acid, and becomes a black sulphuret of iron, which speedily attracts oxygen, and changes to sulphate of iron, or green vitriol. The brown coal schists contain, commonly, some green vitriol crystals spontaneously formed in them. The sulphate of iron transfers its acid to the clay, progressively, as the iron, by the action of the air with a little elevation of temperature, becomes peroxidised; whereby sulphate of alumina is produced. A portion of the green vitriol remains, however, undecomposed, and so much the more as there may happen to be less of other salifiable bases present in the clay slate. Should a little magnesia or lime be present, the vitriol gets more completely decomposed, and a portion of Epsom salt and gypsum is produced.

The production of alum from alum stone, in which the whole ingredients have been found, has been far from enough for the supply of the world, and recourse has been had to substances very different in composition,—alum shale, or schist, and clay. Until within a few years the only supply of alum in Britain has been from the lias shales of Whitby, and the lower coal measures of Campsie and Hurlet, near Glasgow, and they are still the only places where it is manufactured from the ore, as it is called.

The manufacture of alum from alum schists may be described under the six following heads:—The preparation of the alum shale. 2. The lixiviation of the shale. 3. The evaporation of the lixivium. 4. The addition of the saline ingredients, or the precipitation of the alum. 5. The washing of the aluminous salts; and, 6. The crystallisation.

1. *Preparation of the Alum Shale.* — Some alum shales are of such a nature that, being piled in heaps in the open air, and moistened from time to time, they get spontaneously hot, and by degrees fall into a pulverulent mass, ready to be lixiviated. The greater part, however, require the process of ustulation, from which they derive many advantages. The cohesion of the dense shale is thereby so much impaired that its decomposition becomes more rapid; the decomposition of the pyrites is quickened by the expulsion of a portion of the sulphur; and the ready-formed green vitriol is partly decomposed by the heat, with a transference of its sulphuric acid to the clay, and the production of sulphate of alumina.

Such alum shales as contain too little bitumen or coal for the roasting process must be interstratified with layers of small coal or brushwood over an extensive surface. At Whitby the alum-rock, broken into small pieces, is laid upon a horizontal bed of

Digitized by Google

fuel, composed of brushwood; but at Hurlet small coal is chiefly used for the lower bed. When about four feet of rock is piled on, fire is set to the bottom in various parts; and whenever the mass is fairly kindled, more rock is placed over the top. At Whitby this piling process is continued till the calcining heap is raised to the height of 90 or 100 feet. The horizontal area is also augmented at the same time till it forms a great bed nearly 200 feet square, having therefore about 100,000 yards of solid measurement. The rapidity of the combustion is tempered by plastering up the crevices with small schist moistened. When such an immense mass is inflamed, the heat is sure to rise too high, and an immense waste of sulphur and sulphuric acid must ensue. This evil has been noticed at the Whitby works. At Hurlet the height to which the heap is piled is only a few feet, while the horizontal area is expanded: which is a much more judicious arrangement. At Whitby 130 tons of calcined schist produces on an average 1 ton of alum. In this humid climate it would be advisable to pile up on the top of the horizontal strata of brushwood or coal and schist, a pyramidal mass of schist, which, having its surface plastered smooth, with only a few air-holes, will protect the mass from the rains, and at the same time prevent the combustion from becoming too vehement. Should heavy rains supervene, a gutter must be scooped out round the pile for receiving the aluminous lixivium, and conducting it into the reservoir.

It may be observed, that certain alum schists contain abundance of combustible matter, to keep up a suitable calcining heat after the fire is once kindled; and therefore nothing is needed but the first layer of brushwood, which, in this case, may be laid over the first bed of the bituminous schist.

A continual but very slow heat, with a smothered fire, is most beneficial for the ustulation of alum-slate. When the fire is too brisk, the sulphuret of iron may run with the earthy matters into a species of slag, or the sulphur will be dissipated in vapour, by both of which accidents the product of alum will be impaired. Those bituminous alum schists which have been used as fuel under steam boilers have suffered such a violent combustion that their ashes yield almost no alum. Even the best regulated calcining pipes are apt to burn too briskly in high winds, and should have their draught-holes carefully stopped under such circumstances. It may be laid down as a general rule, that the slower the combustion the richer the roasted ore will be in sulphate of alumina. When the calcination is complete, the heap diminishes to one-half its original bulk; it is covered with a light reddish ash, and is open and porous in the interior, so that the air can circulate freely throughout the mass. To favour this access of air, the masses should not be too lofty; and in dry weather a little water should be occasionally sprinkled on them, which, by dissolving away some of the saline matter, will make the interior more open to the atmosphere.

Messrs. Richardson and Ronalds have given some very minute analyses of the Whitby and Campsie shales.

	Whitby.		Campsie.		
	Top Rock.	Bottom Rock.	Top Rock.	Top Rock.	Bottom Rock.
Sulphur	- -	- -	22·36	23·44 }	9·63
Iron	- -	- -	18·16	15·04 }	
Sulphuret of iron	4·20	8·50			
Silica	52·25	51·16	15·40	15·40	0·47
Protoxide of iron	8·49	6·11	- -	- -	2·18
Alumina	18·75	18·30	11·35	11·64	18·91
Lime	1·25	2·15	1·40	2·22	0·40
Magnesia	0·91	0·90	0.50	0·32	2·17
Oxide of manganese	traces	traces	0·15	- -	0·55
Sulphuric acid	1·37	2·50	- -	- -	0·05
Potash	0·13	traces	0·90	- -	1·26
Soda	0·20	traces	- -	- -	0·21
Chlorine	traces	traces			
Carbon and loss	- -	- -	29·78		
Carbon	- -	- -	- -	28·80	
Coal	4·97	8·29	- -	- -	8·51
Loss	- -	- -	- -	3·13	0·59
Water	2·88	2·00	- -	- -	8·54
	95·40	91·91	100·00	99·99	100·00

Digitized by Google

As the Top one contains a larger excess of iron pyrites than the Bottom, they are mixed so as to diffuse the sulphuric acid equally.

Erdmann has thus analysed his German specimens:—

		Garnsdorff.	Wezelstein.
Soluble in acid.	Sulphuret of iron	7·533	10·166
	Silica	0·060	0·100
	Peroxide of iron	0·966	2·466
	Alumina	1·833	3·166
	Lime	0·400	1·000
	Magnesia	trace	1·022
Insoluble in acid.	Silica	50·066	52·200
	Alumina	8·900	17·900
	Peroxide of iron	1·300	3·566
	Magnesia	1·000	1·133
	Lime	trace	trace
	Coal	22·833	0·805
	Water	2·208	5·080

Other shales will be found of interest; the following are by G. Kersten:—

	Hermann-schachte.	Glückauf-gung.	Blücher-schachte.
Carbonaceous matter	41·10	27·92	34·20
Silica	44·02	51·32	50·21
Peroxide of iron	6·23	8·40	0·42
Alumina	5·60	7·62	5·21
Magnesia	0·32	0·26	0·53
Sulphur	1·25	2·89	1·72
Oxide of manganese	0·12	traces	traces
Sulphate of lime	traces	traces	traces
	98·64	98·41	98·39

	Shales from Freienwalde, by Klaproth.	*Shales from Pilzberg*, by Bergemann.
Alumina	16·000	10·80
Silica	40·00	45·30
Magnesia	0·25	
Sulphur	2·85	3·94
Carbon	19·65	5·95
Protoxide of iron	6·40	5·50
Oxide of manganese		0·60
Sulphate of protoxide of iron	1·80	5·73
„ „ alumina		1·20
„ „ lime	1·50	1·71
„ „ potash	1·50	1·75
Chloride of potassium	0·50	0·35
Sulphuric acid		0·47
Water	10·75	16·50
	101·20	99·70

Here the sulphur has evidently existed in combination with iron, which has been united to oxygen by the analysts. The amount of sulphate shows a partial disintegration and other changes.

Lampadius gives another with much more sulphur:—

Digitized by Google

Alum Shale from Siehda.

Sulphate of alumina	2·68
Potash-alum	0·47
Sulphate of iron	0·95
Sulphate of lime	1·70
Silica	10·32
Alumina	9·21
Magnesia	traces
Oxide of iron	2·30
Oxide of manganese	0·31
Sulphur	7·13
Water	33·90
Carbon	31·03
	100·00

When alum is made of such shale, the object is first of all to oxidise the sulphur, forming sulphuric acid. This acid then dissolves the alumina. The result may be accomplished by allowing the shale to disintegrate spontaneously in the air, the sulphur oxidising and dissolving the alumina. But in general, as at Whitby and Campsie, combustion must be resorted to. This can be accomplished without the use of coal, further than is needful simply to set fire to that portion which exists in the shale itself. Indeed, the Campsie one, having more coal than is desirable for slow combustion, is mixed with some spent material, in order to diminish the force of the heat.

The sulphur is united with the iron, forming a bisulphuret, each atom of which must therefore take up seven atoms of oxygen, $FeS^2 + 7O = FeO\,SO^3 + SO^3$. When combustion takes place, the sulphur oxidises: if rapid combustion is used, then sulphurous acid gas escapes; if slow combustion, the sulphurous acid penetrates the mass slowly, receives another atom of oxygen, unites to a base, and a sulphate is the consequence. Sulphate of iron is formed and pure sulphuric acid. In the process it is probable that the oxidation is completed by means of the iron. Protoxide of iron readily becomes peroxide; the sulphurous acid readily decomposes peroxide, forming sulphuric acid and protoxide of iron. This protoxide of iron is again converted into peroxide, and if not dissolved is rendered, to a great extent, difficult to dissolve, by reason of the heat of the mass. For this reason partly, there is less sulphate of iron in the alum than might be expected. To effect these changes it is desirable to burn very slowly, so as to allow no loss of sulphurous acid, and, in washing, to allow the water to stand a long time on the burnt ore. Another method, by which the sulphuric acid is transferred to the alumina, is the peroxidation of the protoxide in the sulphate of iron; acid is by this means set free and begins to act on the alumina.

The protosulphate of iron being formed, it is removed by boiling down the liquor until the protosulphate of iron crystallises out, at the same time the solution becoming saturated with the aluminous salt. The sulphate of iron is soluble in 0·3 of hot water, the alum in 0·06. The liquid around the crystals on the remaining mother liquor contains iron also; this is washed off by adding pure liquors.

The presence of lime or magnesia in the ores is, of course, a means of abstracting acid, preventing the alumina being dissolved, and even precipitating it when dissolved.

Knapp says that at Salzweiler, near Duttweiler, in Rhenish Prussia, the roasting of the ore takes place in the pit or mine. The stratum of brown coal which lies under it, having been accidentally set fire to in 1660, has smouldered till the present time without intermission.

When the ores are roasted, one half of the sulphur is freed and sent into the mass or escapes as sulphurous acid; and the remaining, protosulphuret of iron, is afterwards converted into green vitriol.

When the calcined mineral becomes thoroughly cold, we may proceed to the lixiviation. But as, from the first construction of the piles or beds till their complete calcination, many weeks, or even months, may elapse, care ought to be taken to provide a sufficient number or extent of them, so as to have an adequate supply of material for carrying on the lixiviating and crystallising processes during the course of the year, or at least during the severity of the winter season, when the calcination may be suspended, and the lixiviation becomes unsatisfactory. The beds are known to be sufficiently decomposed by the efflorescence of the salt which appears upon the stones, from the strong aluminous taste of the ashes, and from the appropriate chemical test of lixiviating an aliquot average portion of the mass, and seeing how much alum it will yield with solution sulphate of potash or chloride of potassium.

Digitized by Google

2. *The Lixiviation.* — The lixiviation is best performed in stone-built cisterns; those of wood, however strong at first, are soon decomposed, and need repairs. They ought to be erected in the neighbourhood of the calcining heaps, to save the labour of transport, and so arranged that the solutions from the higher cisterns may spontaneously flow into the lower. In this point of view, a sloping terrace is the best situation for an alum work. In the lowest part of this terrace, and in the neighbourhood of the boiling-house, there ought to be two or more large tanks, for holding the crude lixivium, and they should be protected from the rain by a proper shed. Upon a somewhat higher level the cisterns of the clear lixivium may be placed. Into the highest range of cisterns the calcined mineral is to be put, taking care to lay the largest lumps at the bottom, and to cover them with lighter ashes. A sufficient quantity of water is now to be run over it, and allowed to rest for some time. The lixivium may then be drawn off, by a stopcock connected with a pipe at the bottom of the cistern, and run into another cistern at a somewhat lower level. Fresh water must now be poured on the partly exhausted schist, and allowed to remain for a sufficient time. This lixivium, being weak, should be run off into a separate tank. In some cases a third addition of fresh water may be requisite, and the weak lixivium which is drawn off may be reserved for a fresh portion of calcined mineral. In order to save evaporation, it is always requisite to strengthen weak leys by employing them instead of water for fresh portions of calcined schist. Upon the ingenious disposition and form of these lixiviating cisterns, much of the economy and success of an alum work depends. The hydrometer should be always used to determine the degree of concentration which the solutions acquire.

The lixiviated stone, being thus exhausted of its soluble ingredients, is to be removed from the cisterns, and piled up in a heap in any convenient place, where it may be left, either spontaneously to decompose, or, after drying, subjected to another calcination.

After calcining and washing the Campsie ores, the residue had the following composition: —

Silica	38·40
Alumina	12·70
Peroxide of iron	20·80
Oxide of manganese	traces
Lime	2·07
Magnesia	2·00
Potash	1·00
Sulphuric acid	10·76
Water	12·27
	100·00

It is, therefore, very far from being a complete process; but it is not considered profitable to remove the whole of the alumina. In some places the exhausted ore is burnt a second time with fresh ore, as at Campsie, but we are not told the estimated exhaustion.

The density of the solution may be brought, upon an average, up to the specific gravity of from 1·09 to 1·15. The latter density may always be obtained by pumping up the weaker solutions upon fresh calcined *mine*. This strong liquor is then drawn off, when the sulphate of lime, the oxide of iron, and the earths are deposited. It is of advantage to leave the liquor exposed to air for some time, whereby the green vitriol may pass into a persulphate of iron with the deposition of some oxide, when the acid will act better on the clay present, so as to increase the quantity of sulphate of alumina. The manufacture of alum is the more imperfect, as the quantity of sulphate of iron left undecomposed is greater, and therefore every expedient ought to be tried to convert the sulphate of iron into sulphate of alumina.

3. *The Evaporation of the Schist Lixivium.* — As the aluminous liquors, however well settled at first, are apt, on the great scale, to deposit earthy matters in the course of their concentration by heat, they are best evaporated by a surface fire, such as that employed at Hurlet and Campsie. A water-tight stone-cistern must be built, having a layer of well-rammed clay behind the flags or tiles which line its bottom and sides. The cistern may be 4 or 6 feet wide, 2 or 3 feet deep, and 30 or 40 feet long, and it is covered in by an arch of stone or brickwork. At one extremity of this tunnel, or covered canal, a fire-grate is set, and at the other a lofty chimney is erected. The cistern being filled to the brim with the alum ley, a strong fire is kindled in the reverberatory grate, and the flame and hot air are forced to sweep along the surface of the liquor, so as to keep it in constant ebullition, and to carry off the aqueous parts in vapour. The soot which is condensed in the process falls to the bottom, and leaves

Digitized by Google

the body of the liquor clear. As the concentration goes on, more of the rough lixivium is run in from the settling cistern, placed on a somewhat higher level, till the whole gets charged with a clear liquor of a specific gravity sufficiently high for transferring into the proper lead boilers.

At Whitby, the lead pans are 10 feet long, 4 feet 9 inches wide, 2 feet 2 inches deep at the one end, and 2 feet 8 inches deep at the other. This increase of depth and corresponding slope facilitates the decantation of the concentrated lixivium by means of a syphon applied at the lower end. The bottom of the pan is supported by a series of parallel iron bars placed very near each other. In these lead pans the liquor is concentrated, at a brisk boiling heat, by means of the flame of a flue beneath them. Every morning the pans are emptied into a settling cistern of stone or lead. The specific gravity of the liquor should be about 1·4 or 1·5, being a saturated solution of the saline matters present. The proper degree of density must vary, however, with different kinds of lixivia, and according to the different views of the manufacturer. For a liquor which consists of two parts of sulphate of alumina, and one part of sulphate of iron, a specific gravity of 1·25 may be sufficient; but for a solution which contains two parts of sulphate of iron to one of sulphate of alumina, so that the green vitriol must be withdrawn first of all by crystallisation, a specific gravity of 1·4 may be requisite.

The construction of an evaporating furnace well adapted to the concentration of aluminous and other crude lixivia is described under SODA. The liquor basin may be made of tiles or flags puddled in clay, and secured at the seams with a good *hydraulic* cement. A mortar made of quicklime mixed with the exhausted schist in powder, and iron turnings, is said to answer well for this purpose. Sometimes over the reverberatory furnace a flat pan is laid, instead of the arched top, into which the crude liquor is put for neutralisation and partial concentration. In Germany, such a pan is made of copper, because iron would waste too fast, and lead would be apt to melt. From this preparation-basin the under evaporating trough is gradually supplied with hot liquor. At one side of this lower trough, there is sometimes a door, through which the sediment may be raked out as it accumulates upon the bottom. Such a contrivance is convenient for this mode of evaporation, and it permits, also, any repairs to be readily made; but, indeed, an apparatus of this kind, well mounted at first, will serve for many years.

In the course of the final concentration of the liquors, it is customary to add some of the mother waters of a former process, the quantity of which must be regulated by a proper analysis and knowledge of their contents. If these mother waters contain much free sulphuric acid, they may prove useful in dissolving a portion of the alumina of the sediment which is always present in greater or less quantity.

4. *The Precipitation of the Alum by adding Alkaline Salts.*—As a general rule, it is most advantageous to separate, first of all, from the concentrated clear liquors, the alum in the state of powder or small crystals, by addition of the proper alkaline matters, and to leave the mingled foreign salts, such as the sulphate of iron or magnesia, in solution, instead of trying to abstract those salts by a previous crystallisation. In this way we not only simplify and accelerate the manufacture of alum, and leave the mother waters to be worked up at any convenient season, but we also avoid the risk of withdrawing any of the sulphate of alumina with the sulphate of iron or magnesia. On this account, the concentration of the liquor ought not to be pushed so far as that, when it gets cold, it should throw out crystals, but merely to the verge of this point. This density may be determined by suitable experiments. The powder of alum is also called *flour*.

The clear liquor should now be run off into the precipitation cistern, and have the sulphate of potash or chloride of potassium, or impure sulphate or carbonate of ammonia, added to it. The sulphate of potash, which is the most direct, forms 18·34 parts out of 100 of crystallised alum; and therefore that quantity, or an equivalent in chloride of potassium, or other potash, or ammoniacal salts, must be introduced into the aluminous liquor. Since sulphate of potash takes 10 parts of cold water to dissolve it, but is much more soluble in boiling water, and since the precipitation of alum is more abundant the more concentrated the mingled solutions are it would be prudent to add the sulphate solution as hot as may be convenient: but, as chloride of potassium is fully three times more soluble in cold water, it is to be preferred as a precipitant, when it can be procured at a cheap rate. It has, also, the advantage of decomposing the sulphate of iron present into a chloride, a salt very difficult of crystallisation, and, therefore, less apt to contaminate the crystals of alum. The quantity of alkaline salts requisite to precipitate the alum, in a granular powder, from the lixivium, depends on their richness in potash or ammonia, on the one hand, and on the richness of the liquors in sulphate of alumina on the other; and this must be ascertained, for each large quantity of product, by a preliminary experiment in a

Digitized by Google

precipitation glass. Here, an aliquot measure of the aluminous liquor being taken, the liquid precipitant must be added in successive portions, as long as it causes any cloud, when the quantity added will be indicated by the graduation of the vessel. A very exact approximation is not practicable upon the great scale; but, as the mother waters are afterwards mixed together in one cistern, any excess of the precipitant at one time is corrected by excess of aluminous sulphate at another, and the resulting alum meal is collected at the bottom. When the precipitated saline powder is thoroughly settled and cooled, the supernatant mother water must be drawn off by a pump, or rather a syphon or stopcock, into a lower cistern. The more completely this drainage is effected, the more easily and completely will the alum be purified.

100 parts of alum are formed from the sulphate of alumina liquor,
by 18·32 of sulphate of potash,
„ 13·86 of sulphate of ammonia,
or 15·69 of chloride of potassium.

Sulphate of ammonia is soluble in 1 of hot and 2 of cold water; sulphate of potash in nearly 10, and chloride of potassium in 3, of water of ordinary temperature; alum, in 13 parts of water. A portion of the alum formed will remain in solution; this will depend on the quantity of liquid; the rest falls as a powder.

This mother liquor has generally a specific gravity of 1·4 at a medium temperature of the atmosphere, and consists of a saturated solution of sulphate or muriate of black and red oxide of iron, with sulphate of magnesia, in certain localities, and chloride of sodium, when kelp salts have been used as a precipitant, as also a saturated solution of sulphate of alumina. By adding some of it, from time to time, to the fresh lixivia, a portion of that sulphate is converted into alum; but, eventually, the mother water must be evaporated, so as to obtain from it a crop of ferruginous crystals; after which it becomes capable, once more, of giving up its alum to the alkaline precipitants.

When the aluminous lixivia contain a great deal of sulphate of iron, it may be good policy to withdraw a portion of it by crystallisation before precipitating the alum. With this view, the liquors must be evaporated to the density of 1·4, and then run off into crystallising stone cisterns. After the green vitriol has crystallised, the liquor should be pumped back into the evaporating pan, and again brought to the density of 1·4. On adding to it, now, the alkalino-saline precipitants, the alum will fall down from this concentrated solution, in a very minute crystalline powder, easy to wash and purify. But this method requires more vessels and manipulation than the preceding, and should only be had recourse to from necessity; since it compels us to carry on the manufacture of both the valuable alum and the lower priced salts at the same time; moreover, the copperas extracted at first from the schist liquors carries with it, as we have said, a portion of the sulphate of alumina, and acquires thereby a dull aspect; whereas the copperas obtained after the separation of the alum is of a brilliant appearance.

5. *The Washing, or Edulcoration, of the Alum Powder.* — This crystalline pulverulent matter has a brownish colour, from the admixture of the ferruginous liquors; but it may be freed from it by washing with very cold water, which dissolves not more than one-eighteenth of its weight of alum. After stirring the powder and the water well together, the former must be allowed to settle, and then the washing must be drawn off. A second washing will render the alum nearly pure. The less water is employed and the more effectually it is drained off, the more complete is the process. The second water may be used in the first washing of another portion of alum powder, in the place of pure water. These washings may be added to the schist lixivia. This powder is now extensively sold without further manipulation.

6. *The Crystallisation.* — The washed alum is put into a lead pan, with just enough water to dissolve it at a boiling heat; fire is applied, and the solution is promoted by stirring. Whenever it is dissolved in a saturated state, it is run off into the crystallising vessels, which are called *roching* casks. These casks are about five feet high, three feet wide at the top, and somewhat wider at the bottom; they are made of very strong staves, nicely fitted to each other, and held together by strong iron hoops, which are driven on *pro tempore*, so that they may be easily knocked off again, in order to take the staves asunder. The concentrated solution, during its slow cooling in these close vessels, forms large regular crystals, which hang down from the top, and project from the sides, while a thick layer or cake lines the whole interior of the cask. At the end of eight or ten days, more or less according to the weather, the hoops and staves are removed, when a cask of apparently solid alum is disclosed to view. The workman now pierces this mass with a pickaxe at the side near the bottom, and allows the mother water of the interior to run off on the sloping

Digitized by Google

stone floor into a proper cistern, whence it is taken and added to another quantity of washed powder to be crystallised with it. The alum is next broken into lumps, exposed in a proper place to dry, and is then put into the finished bing for market. There is sometimes a little insoluble basic alum (subsulphate) left at the bottom of the cask. This, being mixed with the former mother liquors, gets sulphuric acid from them; or, being mixed with a little sulphuric acid, it is equally converted into alum.

Alum Liquors. — In the alum works on the Yorkshire coast, eight different liquors are met with.

1st. "Raw Liquor." The calcined alum shale is steeped in water till the liquor has acquired a specific gravity of 9 or 10 pennyweights, according to the language of the alum-maker.

2nd. "Clarified Liquor." The raw liquor is brought to the boiling point in lead pans, and suffered to stand in a cistern till it has cleared; it is then called clarified liquor. Its gravity is raised to 10 or 11 pennyweights.

3rd. "Concentrated Liquor." Clarified liquor is boiled down to about 20 pennyweights. This is kept merely as a test of the comparative value of the potash salts used by the alum-maker.

4th. "Alum Mother Liquor." The alum pans are fed with clarified liquor, which is boiled down to about 25 or 30 pennyweights, when a proper quantity of potash salt in solution is mixed with it, and the whole run into coolers to crystallise. The liquor pumped from these rough crystals is called "alum mothers."

5th. "Salts Mothers." The alum mothers are boiled down to a crystallising point, and afford a crop of "Rough Epsom," which is a sulphate of magnesia and protoxide of iron.

6th and 7th. "Alum Washings." The rough crystals of alum (No. 4) are washed twice in water, the first washing being about 4 pennyweights, the second about 2½, the difference in gravity being due to mother liquor clinging to the crystals.

8th. "Tun Liquor." The washed crystals are now dissolved in boiling water, and run into the "roching tuns" (wood vessels lined with lead) to crystallise. The mother liquor of the "roch alum" is called "tun liquor:" it is, of course, not quite so pure as a solution of roch alum in water.

The alum-maker's specific-gravity bottle holds 80 pennyweights of water, and by 10 pennyweights he means 10 more than water, or 90.

The numbers on Twaddle's hydrometer, divided by 2·5, give alum-makers' pennyweights.

The alum-maker tests his samples of potash salts comparatively by dissolving equal weights of the different samples in equal measures of alum liquor at 20 pennyweights, heated up to the boiling-point, and weighing the quantity of alum crystals produced on cooling.

For the above information I am indebted to my friend Mr. Maurice Scanlan, who superintended for some time the Mulgrave Alum Works.

He informs me that 6½ tons of the alum rock at the Mulgrave Works, to the north of Whitby, yield, after calcination, &c., one ton of alum.

The price varies with the price of labour and of sulphur. Sulphate of alumina is from 7*l.* to 8*l.* per ton; potash and ammonia alum, 9*l.* per ton; and alum cake, 7*l.* 10*s.* to 8*l.* Their true value consists in the amount of soluble alumina which they contain, and for calico printing also in their freedom from iron.

The alum shales not being very generally found over the country, and nature having interposed certain limits to the amount manufactured and the speed of the process, many attempts have been made to obtain alum and sulphate of alumina.

In 1743, Ambrose Newton wished to economise the manufacture by boiling the scum of the alum works, the muddy deposit in Yorkshire, and adding to the concentrated solution of 45 pennyweights, stale urine, which is ammonia, until the solution became 27 pennyweights. (An old method of hydrometry among alum makers.) The liquor stands "for four days, and strikes out into small allom, and afterwards melted and roached into casks, which stand 14 days, and are taken down and the allom is finished."

Another patent in 1765, by Holme, Cropper, and two Nicholsons, uses stale urine and kelp liquor. They seem to use, by a mistake in names, iron pyrites only for their alum, but no doubt it contained both iron and alumina. They took advantage of the potash, and perhaps also of the soda, of the kelp.

In 1780, Matthew Sanderson patented a plan for making alum by burning the metallic sulphurets, obtaining the sulphuric acid, and uniting it with aluminous earth, —a far-seeing plan, not till long after adopted.

Digitized by Google

In 1794 Lord Dundonald patented a process for "washing aluminous, vitriolic, or pyritous schist or materials with sea water or solutions of salts containing muriate of soda," or mixing muriate of soda with aluminous or vitriolated salts or pyritous substances. He also proposed the use of muriatic acid. It is probable, then, that both a soda- and an ammonia-alum have been manufactured when the whole method was not very clearly understood.

Macquer, Fourcroy, and Vauquelin having discovered the component parts of alum, Chaptal made it from its elements, using clay. He says, "Pure clay upon which the sulphuric acid is digested is dissolved with difficulty." He then says, "I calcine my clays, and reduce them into small pieces, which I spread on the floor of my leaden chambers. The sulphuric acid, which is formed by combustion of a mixture of sulphur and saltpetre, expands itself in the cavity of these chambers, and exists for a certain time in the vaporous form. In this form it has a stronger action than when it has been weakened by the mixture of a quantity of water more or less considerable, so that it seizes the earths, combines with them, causes them to increase in bulk by the effervescence which takes place, and at the end of several days the whole surface exposed to the vapour is converted into alum. Care is taken to stir these earths from time to time, that they may successively present all their surfaces to the action of the acid." "But whatever process may be used to combine the acid with clay, it is necessary to expose the aluminised earths to the air during a greater or less space of time, in order that the combination may be more accurate, and the saturation more complete." This is, in fact, the mode of making the sulphate of alumina. It was then dissolved in water, drawn off clear, to free it from the silica and undissolved matter, mixed with sulphate of potash, evaporated, and crystallised.

The manufacture of the alum from clay seems to have been a good deal used in France. Their method at present, according to Regnault, is as follows:—"They choose clays, such as kaolins, which contain little iron. The clays are then calcined at a low red heat in a furnace; they are ground to powder in a mill, and mixed with half their weight of sulphuric acid of 1·45 specific gravity. The mixture is then heated in another furnace until the sulphuric acid begins to evaporate. It is then taken out, and left to stand for several days." After some time the combination becomes intimate, and the usual method of removing the sulphate of alumina from the insoluble matter is resorted to, and the potash, or ammonia-salt, is added, to convert it into alum.

The most usual method has been to allow it to stand some weeks, or months, until the combination has been effected. This has partially arisen from a supposition of the necessity of giving it as much time as is needful with the shales, as it was not known until lately how completely the acid may decompose the clays.

A patent was obtained in November, 1839, by Mr. William Wiesmann, of Duesburg, for improvements in the manufacture of alum. He subjects potters' clay to a moderate red heat, grinds it, and subjects the powder, in leaden pans, to the action of concentrated sulphuric acid (66° B.), taking care to use excess of clay and a moderate heat. The mixture is to be stirred till it is dry, then treated with boiling water, in order to dissolve the sulphate of alumina formed. So far the process is old and well known. The novelty consists in freeing the saline solution from iron by ferrocyanide of potassium (prussiate of potash). When the iron has been all thrown down in the form of Prussian blue, the liquor is allowed to settle, the supernatant pure sulphate is drawn off, and evaporated till it forms, on cooling, a concrete mass, which may be moulded into the shape of bricks, &c., for the convenience of packing.

This was manufactured at Lee-Moor, near Plympton. Dr. Muspratt's analysis makes it a basic sulphate $= 2Al^2O^3 5SO^3 + 33$ Aq.; and he adds that manufacturers objected to it because it was impossible to judge of its purity by its merely physical appearance. Mohr's analysis gave—

Alumina - - - -	13·91
Sulphuric acid - - -	36·24
Water - - - -	49·60
Sulphate of potash - -	1·50

His mode of removing iron by prussiate of soda is very successful.

By having an excess of clay, Wiesmann intended to have all his acid saturated. He found that he could not dissolve all the alumina by using only its equivalent of acid; he preferred, therefore, to lose the alumina, as in the other processes, from shale and alum-stone.

Hervey's patent of 1839. Clay is dried, ground, and sieved; it is then mixed with sulphuric acid of from 10° to 80 Twad., and from ¼ to an equal quantity of clay, used according to its quality. The mixture is then well stirred; a great ebullition

Digitized by Google

ensues, and after ebullition it is again stirred. This is the formation of the sulphate of alumina, which is washed out, and made into alum in the ordinary way.

In 1842 Mr. Turner patented a method, said to be originally Sprengel's proposal, of extracting the alumina and potash from felspar to make alum. The felspar is heated with sulphate of potash to melting, then carbonate of potash is added. This gives a soluble glass, which, in boiling water, takes up two-thirds of the silica and as much potash as was added to the felspar. This being heated with carbonic acid, gives a gelatinous mass of silica. When dried, the carbonate of potash may be washed out. The insoluble portion of the glass contains the original felspar, minus two-thirds of its silica—a light, porous substance, similar in composition to elaolite. This is boiled with sulphuric acid of 1·2 specific gravity. The intense heat needed has prevented the success of this process.

In 1842 Kagenbusch proposed to cover the schist over with a plastering of clay, or mud, for several months, and wash with water; then to have it burnt in kilns fitted with air holes. In this process turf is used, on which the schist rests. The air holes regulate the combustion, which lasts three days. He uses kelp to obtain the alkali.

In 1850 J. T. Wilson proposed a method of collecting the ammonia from smoke, and using it in making ammonia-alum. What is wanting, he supplements by potash salts, causing a mixed potash- and ammonia-alum to be manufactured.

In 1854 Richardson adds iron pyrites, to increase the amount of sulphur, and, consequently, of sulphuric acid, in the shale; but it does not seem to have been used.

In 1855 Dr. Frankland precipitated the subsulphate of alumina, and added sulphuric acid, thus obtaining the base by a small expenditure of precipitant.

In 1856 J. Metcalf makes a cake similar to the alum-cake described at p. 118; but he uses coarse clay.

In 1856 Henry Pease and Thomas Richardson mix clay with chloride of potassium, or with common salt; they convert both into sulphates; the muriate set free dissolves the alumina, and the chloride of aluminum formed is used as alum.

In 1856 Spilsburg's patent purposed to make alum from kryolite.

The Boghead Cannel-coal ash contains about 30 per cent. of alumina, which it has been proposed to dissolve for making alum; but it has not hitherto been found a convenient material.

Alum Manufacture simplified.—The alum shale, or schist, is the material whence the alumina is obtained: this shale is roasted in heaps in the open air, in order to render it porous and more absorbent of the sulphuric acid. To the roasted shale, sulphuric acid of specific gravity 1·75 is added, by which means sulphate of alumina is formed. In order to wash out from the almost dry mass this sulphate of alumina, and at the same time to supply the equivalent of the sulphate of ammonia necessary to constitute the formation of the double salt of alumina and ammonia, the boiling hot mother liquor of a previous operation is employed; and, as this mother liquor, when removed from the alum crystallisers, contains free sulphuric acid, the ammonia from a still, containing the ammoniacal liquor of the gas works, is distilled into it, and the boiling hot solution of sulphate of ammonia thus formed dissolves out the sulphate of alumina from the shale. The alum liquor thus obtained is of such a specific gravity, that it crystallises without the necessity of having recourse to evaporation, and thus a considerable saving in fuel is effected. In order to obtain ammoniacal salts, such as sulphate and chloride, with the greatest possible economy, a series of two or more—say, for instance, four—cylindrical boilers are employed, each of which is placed at such a distance above the other that the contents of the upper boiler may be drawn off into the one next below it. The uppermost boiler is provided with an exit pipe, and has also a supply pipe, connecting the boiler with a reservoir of ammoniacal gas liquor. Into the lowermost vessel of the series passes a pipe conveying high pressure steam, by means of which the liquor in the boiler soon becomes heated to the boiling point. The vapour of ammonia and water passes off through an exit pipe into the boiler placed next above it in the series, the liquor in which also quickly boils, and vapour of ammonia and water pass off in the same way as before to the next vessel above it, and so throughout the series. By the time the vapour of ammonia passes off from the uppermost boiler, it has been so concentrated that, on passing it into sulphuric or muriatic acid, a concentrated solution of either alkaline salt is obtained, of sufficient specific gravity to crystallise without evaporation, and thus a considerable saving in fuel and time is effected, and the ammoniacal liquor most thoroughly exhausted. Fresh supplies of ammoniacal liquor are constantly furnished to the uppermost vessel from the reservoir; the partially exhausted liquors are run from the higher to the lower vessels in succession, and the exhausted liquors run off to waste, from time to time, from the lowermost vessel of the series.

Alum is made extensively in England and France from an artificial sulphate of

Digitized by Google

alumina. For this purpose clays are chosen as free as possible from carbonate of lime and oxide of iron. They are calcined in a reverberatory furnace, in order to expel the water, to peroxidise the iron, and to render the alumina more easily acted on by the acid. The expulsion of the water renders the clay porous and capable of absorbing the sulphuric acid by capillary attraction. The peroxidation of the iron renders it less soluble in the sulphuric acid; and the silica of the clay, by reacting on the alumina, impairs its aggregation, and makes it more readily attracted by the acid. The clay should therefore be moderately calcined; but not so as to indurate it like pottery ware, for it would then suffer a species of siliceous combination which would make it resist the action of acids. The clay is usually calcined in a reverberatory furnace, the flame of which serves afterwards to heat two evaporating pans and a basin for containing a mixture of the calcined clay and sulphuric acid. As soon as the clay has become friable in the furnace it is taken out, reduced to powder, and passed through a fine sieve. With 100 parts of the pulverised clay, 45 parts of sulphuric acid, of specific gravity 1·45, are well mixed, in a stone basin, arched over with brickwork. The flame and hot air of a reverberatory furnace are made to play along the mixture, in the same way as described for evaporating alum-schist liquors. (See SODA.) The mixture, being stirred from time to time, is, at the end of a few days, to be raked out, and to be set aside in a warm place, for the acid to work on the clay, during six or eight weeks. At the end of this time it must be washed, to extract the sulphate of alumina. With this view, it may be treated like the roasted alum ores above described. If potash-alum is to be formed, this sulphate of alumina is evaporated to the specific gravity of 1·38; but if ammonia-alum, to the specific gravity of only 1·24; because the sulphate of ammonia, being soluble in twice its weight of water, will cause a precipitation of pulverulent alum from a weaker solution of sulphate of alumina than the less soluble sulphate of potash could do.

In preparing alum from clay or shale, it is of infinite importance that so much and no more heat be applied to the clay or shale, in the first instance, as will just expel the water of combination without inducing contraction. A temperature of 600° F. is well adapted to effect this object, provided it be maintained for a sufficient period. When this has been carefully done, the silicate of alumina remaining is easily enough acted upon by sulphuric acid, either slightly diluted or of the ordinary commercial strength. The best form of apparatus is a leaden boiler, divided into two parts by a perforated septum or partition, also in lead; though on a very large scale, brickwork set in clay might be employed. Into one of the compartments the roasted clay or shale should be put, and diluted sulphuric acid being added, the bottom of the other compartment may be exposed to the action of a well-regulated fire, or, what is better, heated by means of steam through the agency of a coil of leaden pipe. In this way a circulation of the fluid takes place throughout the mass of shale; and, as the alumina dissolves, the dense fluid it produces, falling continually towards the bottom of the boiler, is replaced by dilute acid, which, becoming in its turn saturated, falls like the first; and so on in succession, until either the whole of the alumina is taken up, or the acid in great part neutralised. The solution of sulphate of alumina thus obtained is sometimes evaporated to dryness, and sold under the name "concentrated alum;" but more generally it is boiled down until of the specific gravity of about 1·35; then one or other of the carbonates or sulphates of potash or ammonia, or chloride of either base, or a mixture of these, is added to the boiling fluid, and as soon as the solution is complete, the whole is run out into a cooler to crystallise. The rough alum thus made is sometimes purified by a subsequent recrystallisation, after which it is "roched" for the market — a process intended merely to give it the ordinary commercial aspect, but of no real value in a chemical point of view.

The manufacture of alum is now taking an entirely new shape, and the two processes of Mr. Spence and Mr. Pochin threaten to absorb the whole of the manufacture in the north-west.

Mr. Spence, who has a manufactory of ammonia-alum at Manchester, called the Pendleton Alum Works, and another at Goole, in Yorkshire, has now become the largest maker of this substance in the world, as his regular production amounts to upwards of 100 tons per week. In this process, which he has patented, he uses for the production of his sulphate-of-alumina solution the carbonaceous shale of the coal measure. This substance contains from 5 to 10 per cent. of carbonaceous matter, and, when ignited by a small quantity of burning coal, the combustion continues of itself. To insure this the shale is spread into long heaps not exceeding 18 inches in height, and having a brick drain running along each to supply air; in this manner it slowly calcines: this process must be so conducted as not to vitrify the shale. After calcination it is boiled and digested in large leaden pans, heated by fire, with sulphuric acid of 1·4 specific gravity. After 30 to 40 hours of digestion the sulphate of alumina formed is run into another leaden pan, and the boiling vapour from the

Digitized by Google

ammonia liquor of the gas works is passed into it, until so much alumina is combined with the solution as to form ammonia-alum. The solution is then run into shallow leaden coolers and the alum crystallises. It is then purified and washed much in the usual way, only that the process is conducted so as to cause much less labour than at older alum works.

Alum Cake.—This substance owes its value to the amount of sulphate of alumina it contains, and is in fact another means of making soluble alumina accessible. We have already seen the many attempts to obtain alumina from clay, and the tedious nature of the operation of solution in acid, as well as the long after-processes of lixiviation and conversion into sulphate of alumina, or into alum, by reboiling or crystallising. Mr. Pochin, of Manchester, has found a method of removing all the difficulties, both of the first and after processes. He uses very fine china clay, free from iron, heats it in a furnace, mixes it thoroughly with acid, and finds that, when the process is managed carefully, the combination of the alumina and sulphuric acid is not only complete, but so violent that he is obliged to dilute his acid considerably, in order to calm the action. When mixed, it is passed into cisterns with movable sides, where, in a few minutes, it heats violently and boils. The thick liquid gradually becomes thicker, until it is converted into a solid porous mass — the pores being made by the bubbles of steam which rise in the mass, which is not fluid enough to contract to its original volume. The porous mass is perfectly dry, although retaining a large amount of combined water. It retains, of course, all the silica of the original clay, but this is in such fine division that every particle appears homogeneous. The silica gives it a dryness to the touch not easily gained by the sulphate only.

When pure sulphate of alumina is wanted in solution, the silica is allowed to precipitate before using it, but, in many cases, the fine silica is no hindrance; then the solution is made use of at once.

Our *Imports* of ALUM were: —

1861.		1862.		1863.	
Quantity.	Value.	Quantity.	Value.	Quantity.	Value.
tons.	£	tons.	£	tons.	£
19,947	4,989	10,081	2,520	10,335	3,007

Our exports of ALUM from 1861 were :—

	1861.*		1862.*		1863.	
	Quantity.	Value.	Quantity.	Value.	Quantity.	Value.
	cwts.	£	cwts.	£	cwts.	£
Italy—Sardinian States	- -	- -	- -	- -	10,400	3,755
Austrian Territories	- -	- -	- -	- -	6,878	2,425
Turkey - - -	77,470	26,702	105,751	36,705	8,418	3,175
United States - -					14,055	4,759
India, Ceylon, &c. -	- -	- -	- -	- -	60,439	22,010
Other countries -	- -	- -	- -	- -	50,742	18,930
					150,932	£55,054

Some quantity of alum has been exported from China, chiefly to India, within a short period. The Chinese use alum very largely in their cements.

The alum mines are in the neighbourhood of Peh-kwan harbour, 2° 9′ 10″ N., 12° 32′ 6″ E. Ten alum-making establishments appear to exist there, and the process, as described in the *North China Mail*, is similar to that employed where, in this country, the alum-shale is used.—R. A. S.

ALUMINA. (Al^2O^3,51·4) This is the only oxide which the metal aluminium forms, and it is assumed to be a sesquioxide on account of its isomorphism with sesquioxide of iron.

The occurrence of alumina in the native state has been before mentioned, and the several minerals will be found described elsewhere.

* The countries to which exported are not given in the returns for these two years.

Digitized by Google

It is obtained in the state of hydrate from common alum (KO,SO^3; $Al^2O^3,3SO^3+24HO$) by adding a solution of ammonia (or better, carbonate of ammonia) to the latter salt and boiling. The precipitate is white, and gelatinous in a high degree, and retains the salts, in the presence of which it has been formed, with remarkable pertinacity, so that it is very difficult to wash.

By drying and igniting this hydrate, the anhydrous alumina is produced; but it may be obtained more readily by heating ammonia-alum (NH^4O,SO^3; $Al^2O^3 3SO^3+24HO$). All the constituents of this salt are volatile, with the exception of the alumina. It is insoluble in water, but soluble both in acids and alkalis. Towards the former it plays the part of a base, producing the ordinary alumina salts; whilst, with the latter, it also enters into combination, but in this case it is an acid, forming a series of compounds which may be called aluminates.

The important application of alumina and its compounds in the arts of dyeing and calico printing depends upon a peculiar attraction which it possesses for organic bodies. This affinity is so strong, that when digested in solutions of vegetable colouring matters the alumina combines with and carries down the colouring matter, removing it entirely from the solution. Pigments thus obtained, which are combinations of alumina with the vegetable colouring matters, are called "*lakes*."

Alumina has not only an affinity for the colouring matters, but at the same time also for the vegetable fibres, cotton, silk, wool, &c.; and hence, if alumina be precipitated upon cloth in the presence of a colouring matter, a most intimate union is effected between the cloth and the colour. Alumina, when employed in this way, is called a "mordant."

Other bodies have a similar attraction for colouring matters, *e.g.* binoxide of tin and sesquioxide of iron: each of these gives its peculiar shade to the colour or combination, alumina changing it least.

Soluble Modification of Alumina.—Mr. Walter Crum* has discovered a peculiar soluble modification of alumina. The biacetate of alumina has been found by Mr. Crum to possess the very curious property of parting with its acetic acid until the whole is expelled, by the long-continued application of heat to a solution of this salt; the alumina remains in the solution in a soluble allotropic condition. Its coagulum with dyewoods is translucent, and entirely different from the opaque cakes formed by ordinary alumina; hence this solution cannot act as a mordant. But this solution of alumina, which is perfectly colourless and transparent, has the alumina separated from it by the slightest causes. A minute quantity of either an acid, an alkali, even of a neutral salt, or of a vegetable colouring matter, effects the change. The precipitated alumina is insoluble in acids, even boiling sulphuric; this shows another allotropic condition. But it is dissolved by caustic alkalis, by which it is restored to its common state.—H. M. W.

ALUMINA, ACETATE OF. The acetates of alumina are extensively used in the arts on account of the property which they possess of being readily decomposed with deposition of their alumina on the fibre of cloth; hence they are used as mordants, in the manner described under CALICO PRINTING; and sometimes in dyeing they are mixed with the solution of a colouring matter; in this the textile fabric is immersed, whilst, on heating, the alumina is precipitated upon the fabric, which, in consequence of its affinities before alluded to, carries down the colouring matter with it, and fixes it on the cloth.

The acetate of alumina thus employed is obtained by treating sulphate of alumina with neutral acetate of lead, and filtering off the solution from the precipitate of sulphate of lead. Acetate of lime is also used; but the sulphate in this case does not leave the solution so clear or so rapidly.

According to Mr. Walter Crum*, the solution resulting from the decomposition of sulphate of alumina (Al^2O^3, $3SO^3$) by monobasic acetate of lead contains the salt $Al^2O^3,2C^4H^3O^3$ (biacetate of alumina), together with one equivalent of free acetic acid, the compound $Al^2O^3,3C^4H^3O^3$ not appearing to exist. By evaporating this solution at low temperatures, *e.g.* in a very thin layer of fluid below 38°C. (100°F.), Crum obtained a fixed residue completely soluble in water, the composition of which, in the dry state, approached Al^2O^3, $2C^4H^3O^3+4HO$.—H. M. W.

ALUMINA, NITRATE OF. According to Ordway ("Siliman's Journal," iv. 30), a concentrated acid solution of alumina in nitric acid deposits rhombic crystals containing Al^2O^3, $3NO^5+18HO$. By the action of this salt on hydrate of alumina basic salts are also formed.—H. M. W.

ALUMINA, SILICATES OF. Silicate of alumina is the chief constituent of common clay (*which see*); it occurs also associated with the silicates of iron, mag-

* Chemical Society's Quarterly Journal, vi. 216.

Digitized by Google

nesia, lime, and the alkalis in a great variety of minerals, which will be found described elsewhere. The most interesting of these are the felspars and the zeolites. See CLAY.

Of course, being present in clay, silicate of alumina is the essential constituent of porcelain and earthenware. See EARTHENWARE and PORCELAIN.—H. M. W.

ALUMINA, SULPHATE OF. The neutral sulphate of alumina, Al^2O^3, $3SO^3 + 18HO$, which is obtained by dissolving alumina in sulphuric acid, crystallises in needles and plates; but sulphuric acid and alumina combine in other proportions, *e.g.* a salt of the formula Al^2O^3, $3SO^3 + Al^2O^3$ was obtained by Mons, and the solution of this salt, when largely diluted with water, splits into the neutral sulphate and an insoluble powder containing Al^2O^3, $3SO^3 + 2Al^2O^3 + 9HO$. This subsalt forms the mineral *aluminite*, found near Newhaven, and was found by Humboldt in the schists of the Andes.

The sulphate of alumina is now extensively used in the arts instead of alum, under the name of "concentrated alum." For most of the purposes for which alum is employed, the sulphate of potash is an unnecessary constituent, being only added in order to facilitate the purification of the compound from iron; for in consequence of the ready crystallisability of alum, this salt is easily purified. Nevertheless, Wiesmann has succeeded in removing the iron from the crude solution of sulphate of alumina obtained by treating clay with sulphuric acid, by adding ferrocyanide of potassium, which throws down the iron as Prussian blue; the solution, when evaporated to dryness, is found to consist of sulphate of alumina, containing about 7 per cent. of potash alum. 1500 tons of this article were produced at Newcastle-on-Tyne alone in the year 1854. See also ALUM.—H. M. W.

ALUMINIUM. (*Sym.* Al., *equiv.* 13·7.) The name Aluminium is derived from the Latin *alumen*, for alum, of which salt this metal is the notable constituent.

Aluminium, though never found in the free state, occurs extensively diffused in nature in alumina and certain of its salts, especially the silicates.

The native varieties of *anhydrous* alumina are, the sapphire, ruby, and corundum (*which see*), whilst the hydrate occurs in nature in the minerals, diaspore and gibbsite. But the chief quantity of aluminium is found in the endless varieties of the mineral silicates of alumina with other bases, such as the felspars, micas, many kinds of clay, the zeolites, &c.

Alumina was first decomposed by Davy, who discovered the metal soon after decomposing the other earths and alkalis; but he never seems to have obtained it without some mixture of potassium. It is evident, however, that the earth was completely reduced to the metallic state by him.

Wöhler obtained aluminium pure in 1827 * by the reduction of the chloride of aluminum in the form of a grey powder. Later (1845) †, he succeeded by the same process in obtaining it in globules, which he describes as tin white, tolerably malleable and ductile, not materially oxidised by exposure to the air, of a specific gravity of 2·5, but, when hammered, of 2·67; unacted upon by water at the common temperature, but slowly disengaging hydrogen from water at the boiling point.

In 1854 ‡ Deville's first experiments on the preparation and properties of aluminium were published. The method he adopted for the liberation of the metal was essentially the same as that originally employed by Wöhler. But, by dint of improvements in the details of the process, he succeeded in procuring the metal in larger globules, which were silver white, having a fusing point nearly approaching that of silver, which were unoxidised when exposed to the air, even in a fused state, and remaining bright *even in boiling water*, unattacked by either dilute or concentrated nitric or sulphuric acid in the cold; but dissolved by hydrochloric acid with evolution of hydrogen.

Œrsted was undoubtedly the first to prepare the chloride of aluminium §, and it is even stated that he also procured the metal by the following method: "Pure alumina intimately mixed with powdered charcoal was introduced into a porcelain tube; through this, when strongly heated, a stream of chlorine was directed, and the chloride of aluminium formed was collected in a separate vessel. By mixing this compound with an amalgam of potassium, containing a large proportion of the latter body, and immediately heating the mixture, chloride of potassium was found, and the aluminium combined with the mercury. This, on being distilled out of contact with the air, gave off the mercury, whilst aluminium remained in the form of a metallic button, closely resembling tin." ‖

Deville's researches raised the hope that the metal might be obtained in sufficient quantity to become of high technical importance, since it was probable that the

* Poggendorf's Annalen, xl. 146. † Ann. Ch. et Pharm., lili. 422.
‡ Comptes Rendus, xxxviii. 279. § Ferussal, Bul. des Sc. mathémat., &c., 1826, 275
‖ Record of Mining and Metallurgy, Phillips and Darlington.

Digitized by Google

chloride of aluminium might be decomposed by cheaper metals at a higher temperature; and he obtained a grant from the Emperor of the French for the purpose of prosecuting his investigations on a sufficient scale.

Bunsen also showed in 1854* that aluminium could be obtained in reguline masses by submitting the double chloride of aluminium and sodium or potassium to electrolysis in a fused state.

By fusing the chloride of aluminium (obtained by the process which will be found described under the head of the chloride) with an equal equivalent of common salt, he obtained a double chloride, which fused below 200° C. (360° F.), and from which the metal is readily reduced by the same electrolytic process previously employed by Bunsen in the case of magnesium (*which see*).

Bunsen pointed out that the discrepancy existing in the properties of the metal in the two states, as obtained respectively by Wöhler and Deville, arose from its physical condition; for Bunsen found that it was only the massive metal which possessed the properties ascribed to it by Deville, that in fact the pulverulent modification does decompose water at 100° C., as stated by Wöhler.

Almost at the same time Deville published the results of his experiments upon the production of aluminium on a larger scale.† He quite gave up the hope of succeeding in effecting the reduction of the chlorides by any of the common metals. He adhered to Wöhler's and Bunsen's methods, carrying them out on a larger scale, with modifications and improvements in the details, which enabled him to obtain the metal in such quantities, and thus to study its properties with so much success, as to suggest numerous applications, the probability of which never entered the minds of the original discoverers. Very great credit is therefore due to M. Deville, although it is the practice amongst the German chemists to detract from, or even deny, his merit.

The following is the method described by M. Deville for the preparation of this interesting metal.

Having obtained the chloride of aluminium, he introduces into a wide glass (or porcelain) tube 200 or 300 grammes of this salt between two plugs of asbestos (or in a boat of porcelain or even copper), allows a current of hydrogen to pass from the generator through a desiccating bottle containing sulphuric acid and tubes containing chloride of calcium, and finally through the tube containing the chloride; at the same time applying a gentle heat to the chloride, to drive off any free hydrochloric acid which might be formed by the action of the air upon it. He now introduces at the other extremity of the tube a porcelain boat containing sodium; and when the sodium is fused the chloride of aluminium is heated, until its vapour comes in contact with the fused sodium. A powerful reaction ensues, considerable heat is evolved, and by continuing to pass the vapour of the chloride over the sodium until the latter is all consumed, a mass is obtained in the boat of the double chloride of aluminium and sodium ($NaCl, Al^2 Cl^3$), in which globules of the newly reduced metal are suspended. It is allowed to cool in the hydrogen, and then the mass is treated with water, in which the double chloride is soluble, the globules of metal being unacted upon.

These small globules are finally fused together in a porcelain crucible, by heating them strongly under the fused double chloride of aluminium and sodium, or even under common salt.

This process, which succeeds without much difficulty on a small scale, is performed far more successfully as a manufacturing operation. Two cast-iron cylinders are now employed instead of the glass or porcelain tube, the anterior one of which contains the chloride of aluminium, whilst in the posterior one is placed the sodium in a tray, about 10 lbs. being employed in a single operation. A smaller iron cylinder intermediate between the two former is filled with scraps of iron, which serve to separate iron from the vapour of chloride of aluminium, by converting the perchloride of iron into the much less volatile protochloride. They also separate free hydrochloric acid and chloride of sulphur.

During the progress of the operation the connecting tube is kept at a temperature of about 400° to 600° F.; but both the cylinders are but very gently heated, since the chloride of aluminium is volatile at a comparatively low temperature, and the reaction between it and the sodium when once commenced generates so much heat that frequently no external aid is required.

Preparation of Aluminium by Electrolysis. — Mr. Gore has succeeded in obtaining plates of copper coated with aluminium by the electrolysis of solutions of chloride of aluminium, acetate of alumina, and even common alum ‡; but the unalloyed metal cannot be obtained by the electrolysis of solutions. Deville, however, produced it in considerable quantities by the method originally suggested by Bunsen, viz. by the

* Pogg. Ann. xcii. 648. † Comptes Rendus, xxxix. 321. ‡ Phil. Mag. vii. 207.

Digitized by Google

electrolysis of the fused double chloride of aluminium and sodium ($Na\,F, Al^2\,F^3$); but since this process is far more troublesome and expensive than its reduction by sodium, it has been altogether superseded.

Preparation of Aluminium from Kryolite.—So early as March 30, 1855, a specimen of aluminium was exhibited at one of the Friday evening meetings of the Royal Institution, which had been obtained in Dr. Percy's laboratory by Mr. Allan Dick, by a process entirely different from that of Deville, which promised, on account of its great simplicity, to supersede all others.* It consisted in heating small pieces of sodium, placed in alternate layers with powdered kryolite, a mineral now found in considerable abundance in Greenland, which is a double fluoride of aluminium and sodium, analogous to the double chloride of aluminium and sodium, its formula being $Na\,F, Al^2\,F^3$. The process has the advantage that one of the materials is furnished ready formed by nature.

The experiment was only performed on a small scale by Mr. Dick in a platinum crucible lined with magnesia; the small globules of metal, which were obtained at the bottom of the mass of fused salt, being subsequently fused together under chloride of potassium or common salt.

Before the description of these experiments was published, M. Rose, of Berlin, published a paper in September, 1855, on the same subject.† In Rose's experiments he employed cast-iron crucibles, in which was heated ten parts of a mixture of equal weights of kryolite and chloride of potassium with 2 parts of sodium. The aluminium was obtained in small globules, which were fused together under chloride of potassium, as in Mr. Dicks' experiments.

Rose experienced a slight loss of aluminium by fusion under chloride of potassium, and found it more advantageous to perform this fusion under a stratum of the double chloride of aluminium and sodium, as Deville had done.

He never succeeded in extracting the whole quantity of aluminium present in the kryolite (13 per cent.), chiefly on account of the ready oxidisability of the metal when existing in a very finely divided state, as some of it invariably does.

It does not appear that any attempt has since been made to obtain aluminium on the large scale from kryolite, probably from the supply of the mineral not proving so abundant as was at one time anticipated.

In all the processes which have been found practicable on any considerable scale, for the manufacture of aluminium, the powerful affinities of sodium are employed for the purpose of eliminating it from its compounds. The problem of the diminution of the price of aluminium therefore resolves itself into the improvement of the methods for procuring sodium, so as to diminish the cost of the latter metal. M. Deville's attention was therefore directed, in the early steps of the inquiry, to this point; and very considerable improvements have been made by him, which will be found fully described under the head of SODIUM.

Deville‡ has since suggested the employment at once of the double salt of chloride of aluminium and chloride of sodium ($NaCl, Al^2\,Cl^3$), instead of the simple chloride of aluminium, so as to obtain the metal by means of sodium. He uses 400 parts of this double salt, 200 of common salt, 200 of fluor spar, and 75 to 80 of sodium. The above-mentioned salts are dried, powdered, and mixed together; then with these the sodium, in small pieces, is mixed, and the whole heated in a crucible under a layer of common salt. After the reaction is complete, the heat is raised so as to promote the separation of the aluminium in the form of a button. It was found, however, that kryolite was, with advantage, substituted for the fluor spar.

C. Brunner§ employs artificially prepared fluoride of aluminium; but this method cannot offer any advantage over the employment of the chloride, which is cheaper, or the kryolite, which nature affords.

The following remarks on the manufacture of Aluminium are from the pen of Mr. Isaac Lowthian Bell of Newcastle, at whose works at Washington this metal is now produced, this indeed being the only manufactory in this couuntry:—

"Upon the introduction of its manufacture at Washington, three-and-a-half years ago, the source of the alumina was the ordinary ammonia-alum of commerce—a nearly pure sulphate of alumina and ammonia. Exposure to heat drove off the water, sulphuric acid, and ammonia, leaving the alumina behind. This was converted into the double chloride of aluminium and sodium, by the process described by the French chemist, and practised in France, and the double chloride was subsequently decomposed by fusion with sodium. Faint, however, as the traces might be of impurity in the alum itself, they to a great extent, if not entirely (being of a fixed character when exposed to heat), were to be found in the alumina. From the alumina, by the action of chlorine on a heated mixture consisting of this earth,

* Phil. Mag. x. 361.
‡ Ann. de Chim. et Phys. xlvi. 415.
† Poggendorff, Annalen, and Phil. Mag. x. 233.
§ Chemical Gazette, 1856, 339.

Digitized by Google

common salt, and charcoal, these impurities, or a large proportion thereof, found their way into the sublimed double chloride; and once there, it is unnecessary to say that, under the influence of the sodium in the process of reduction, any silica, iron, or phosphorus found their way into the aluminium sought to be obtained. Now, it happens that the presence of foreign matters, in a degree so small as almost to be infinitesimal, interferes so largely with the colour as well as with the malleability of the aluminium, that the use of any substance containing them is of a fatal character. Nor is this all, for the nature of that compound which hitherto has constituted the most important application of this metal—aluminium bronze—is so completely changed by using aluminium containing the impurities referred to, that it ceases to possess any of those properties which render it valuable. As an example of the amount of interference exercised by very minute quantities of impurity, it is perhaps worthy of notice that very few varieties of copper have been found susceptible of being employed for the manufacture of aluminium bronze; and hitherto we have not at Washington, nor have they in France, been able to establish in what the difference consists, between copper fit for the production of aluminium bronze, and that which is usually unsuitable for the purpose. These considerations have led us, both here and in France, to adopt the use of another raw material for the production of aluminium, which either does not contain the impurities referred to as so prejudicial, or contains them in such a form as to admit of their easy separation. This material is Bauxite, so called from the name of the locality where it is found in France. The Bauxite is ground and mixed with the ordinary soda-ash of commerce, and then heated in a furnace. The soda combines with the alumina, and the aluminate of soda so formed is separated from the insoluble portions—viz., peroxide of iron, silico-aluminate of soda, &c.—by lixiviation. Muriatic acid or carbonic acid is then added to the solution, which throws down pure alumina. The remainder of the process is precisely that which is described by Mons. St. Claire Deville. The alumina is mixed with common salt and charcoal, made into balls the size of an orange and dried. These balls are placed in vertical earthen retorts, kept at a red heat, and through the heated contents chlorine gas is passed. The elements of the earth, under the joint influence of carbon and chlorine at that temperature, are separated, the carbon taking the oxygen and the chlorine the aluminium. The latter substance accompanied by chloride of sodium (common salt) sublimes over, and is collected as a double chloride of aluminium and sodium. Sodium,—being required to effect the decomposition of this compound,—is thus prepared. In small iron retorts kept at as high a temperature as iron can bear, a mixture of soda (carbonate of soda) and carbonaceous matter with a little ground chalk is placed. The metallic base of the alkali distils over, and is collected in coal oil. A portion of the double chloride of aluminium and sodium, and the metallic sodium, along with fluxes, is exposed to a full red heat in a reverberating furnace. The sodium seizes the chlorine combined with the aluminium, and thus liberates the lattter metal, which falls to the bottom of the fixed mass. Aluminium is used in sufficient quantity to keep the only work in England—viz., that at Washington—pretty actively employed. As a substance for works of art, when whitened by means of hydrofluoric and phosphoric acid, it appears well adapted, as it runs into the most complicated patterns, and has the advantage of preserving its colour, from the absence of all tendency to unite with sulphur, or to become affected by sulphuretted hydrogen, as happens with silver." Aluminium has been used in the manufacture of weights and scale-beams for chemists, and for opera and field-glasses, for which purposes it is exceedingly valuable, by reason of its lightness and its not being liable to tarnish. A greatly increased activity has been given to the manufacture of aluminium by its use in the manufacture of aluminium-bronze—a compound of exceeding beauty, so much like gold that it can scarcely be distinguished from that precious metal.

Properties.—The metal is white, but with a bluish tinge, and even when pure has a lustre far inferior to silver.

Specific gravity, 2·56, and when hammered, 2·67.

Conducts electricity eight times better than iron, and is feebly magnetic.

Its fusing-point is between the melting-points of zinc and silver.

By electrolysis it is obtained in forms which Deville believes to be regular octahedra; but Rose, who has also occasionally obtained aluminium in a crystalline state (from kryolite), denies that they belong to the regular system.

When pure, it is unoxidised even in moist air; but most of the commercial specimens (probably from impurities present in the metal) become covered with a bluish-grey tarnish.

It is unaffected by cold or boiling water; even steam at a red heat is but slowly decomposed by it.

It is not acted upon by cold nitric acid, and only very slowly dissolved even by the

Digitized by Google

boiling acid; scarcely attacked by dilute sulphuric acid, but readily dissolved by hydrochloric acid, with evolution of hydrogen.

Sulphuretted hydrogen and sulphides have no action upon it; and it is not even attacked by fused hydrated alkalis. Professor Wheatstone* has shown that in the voltaic series, aluminium, although having so small an atomic number, and so low a specific gravity, is more electro-negative than zinc; but it is positive to cadmium, tin, lead, iron, copper, and platinum.

Impurities in Aluminium.—Many of the discrepancies in the properties of aluminium, as obtained by different experimenters, are due to the impurities which are present in it.

If the naphtha be not carefully removed from the sodium, the aluminium is liable to contain carbon.

Frequently, in preparing aluminium, by the action of the chloride on sodium, by Deville's original process, copper boats have been used for holding the sodium; in this case the metal becomes contaminated, not only with copper, but also with any other metals which may be present in the copper—*e.g.* Salm-Horstmar† found copper in the aluminium sold in Paris, and Erdmann detected zinc‡; and in every case the metal is very liable to become mixed with silicon, either from the earthenware tubes, boats, or crucibles, hence Salvetat found, even in the aluminium prepared by Deville himself, 2·87 per cent. of silicon, 2·40 of iron, 6·38 of copper, and traces of lead.

The following analysis of commercial aluminium was communicated to the British Association, at its meeting in 1857, by Professor Mallet.

	Made in Paris.	Made in Berlin.
Al	92·969	96·253
Fe	4·882	3·293
Si	2·149	0·454
Ti	trace	trace
	100·00	100·00

Alloys of Aluminium.—Very small quantities of other metals suffice to destroy the malleability and ductility of aluminium. An alloy containing only $\frac{1}{20}$th of iron or copper cannot be worked, and the presence of $\frac{1}{10}$th copper renders it as brittle as glass. Silver and gold produce brittleness in a less degree. An alloy of 5 parts of silver with 100 of aluminium, is capable of being worked like the pure metal, but it is harder, and therefore susceptible of a finer polish; whilst the alloy, containing 10 per cent. of gold, is softer, but, nevertheless, not so malleable as the pure metal. The presence of even $\frac{1}{1000}$th part of bismuth renders aluminium brittle in a high degree.

These statements by Tissier§, however, require confirmation; for Debray states that aluminium remains malleable and tough when containing as much as 8 per cent. of iron, or 10 per cent. of copper, but that a larger quantity of either of these metals renders it brittle.

It is curious that only 3 per cent. of silver are sufficient to give aluminium *the brilliance and colour of pure silver, over which the alloy has the great advantage* of not being blackened by sulphuretted hydrogen.

On the other hand, small quantities of aluminium combined with other metals change their properties in a remarkable manner. Thus copper alloyed with only $\frac{1}{10}$th of its weight of aluminium has the colour and brilliance of gold, and is still very malleable (*Tissier*); and when the aluminium amounts only to $\frac{1}{5}$th (*i.e.* 20 per cent.) the alloy is quite white (*Debray*). See ALUMINIUM BRONZE.

An alloy of 90 parts of copper and 10 of aluminium is harder than common bronze, and is capable of being worked at high temperatures easier than the best varieties of iron. Larger quantities of aluminium render the metal harder and brittle.—*Debray.*‖

An alloy of 100 parts of silver with 5 of aluminium is as hard as the alloy employed in the silver coinage, although the other properties of the silver remain unchanged (*Tissier*). Similar alloys have likewise been prepared by Dr. Percy.¶

Messrs. Calvert and Johnson describe** an alloy of 25 parts aluminium to 75 of iron, which has the valuable property of *not oxidising by exposure to moist air.*

Uses of Aluminium.—No very important application of aluminium has yet been made, although, at the time M. Deville's experiments were commenced, sanguine hopes were entertained that aluminium might be produced at a price sufficiently low to admit of its practical application on a large scale, these anticipations have

* Phil Mag. x. 143.
‡ Journal pr. Chem. lxvii. 494.
‖ Comptes Rendus, xliii. 925.
** Phil. Mag. x. 245.
† Journal pr. Chem. lxvii. 493.
§ C. and J. Tissier, Comptes Rendus, xliii. 885.
¶ Proceedings of the Royal Institution, March 14, 1856.

Digitized by Google

not been realised; and as yet, on account chiefly of its high price,* the applications which have been made of this interesting metal are but few.

Its low specific gravity, combined with sufficient tenacity, recommends it for many interesting uses. The fractional weights used by chemists, which are made of platinum, are so extremely small that they are constantly being lost; their much greater volume in aluminium renders this metal peculiarly suitable. In the construction of the beams of balances, strength combined with lightness are desiderata; and M. Deville has had very beautiful balance-beams made of this metal; but at present its high price has prevented their extensive adoption.

These same qualities render this metal suitable for the construction of helmets and other armour; but at present these are but curiosities, and are likely to remain so, unless some cheaper method of eliminating the metal than by the agency of sodium be discovered.

Probably one of the most interesting of the applications of aluminium (at least in a scientific point of view) that has been made, is the recent one by Deville and Wöhler, of employing it in the production of crystalline allotropic modifications of certain other elements hitherto unknown in that state—*e.g.* boron, silicon, and titanium (*which see*). It depends upon the fact that these elements, in the amorphous state, dissolved in fused aluminium, and, on cooling the molten solution, they slowly separate from the aluminium in the crystalline state. Aluminium may be gilded by being dipped into a solution of the hyposulphite of gold after it has been well cleaned by the successive use of potash, nitric acid, and water Aluminium is soldered with difficulty. The most successful method is to coat the aluminium with copper by the electrotype process, after which soldering can be effected in the usual way.

Our first importation of aluminium was in 1856, to the value of 35*l.*: in 1863 we imported 29,140 lbs., valued at 69,779*l.*—H. M. W.

ALUMINIUM BRONZE. This alloy was a discovery of Dr. John Percy, F.R.S., and it appears to be a true chemical compound. Mr. I. L. Bell, who manufactures this beautiful metallic compound on a large scale, thus describes its manufacture:—"Copper is melted in a plumbago crucible, and, after being removed from the furnace, the solid aluminium is added. The union of the two metals is attended with such an increase of temperature that the whole becomes white hot, and unless the crucible containing the mixture is of a refractory material, it is fused by the intensity of the heat. A vessel which has resisted a heat sufficient to effect the fusion of copper has been melted when the aluminium has been added."

Mr. Gordon has shown that the amount of tension which aluminium wire was capable of resisting will be found to be between that of the best iron and the best steel wire.

The value of aluminium bronze will be gathered from the following statement of results obtained by Lieut.-Colonel A Strange, F.R.A.S., and communicated by him to the Astronomical Society. Lieut.-Colonel Strange recommended this metal as a valuable material for the construction of astronomical and other philosophical instruments. Regarding the most important qualities as—1. Tensile strength 2. Resistance to compression, 3. Malleability, 4. Transverse strength or rigidity, 5. Expansive ratio, 6. Founding qualities, 7. Behaviour under files, cutting tools, &c., 8. Resistance to atmospheric influences, 9. Fitness to receive graduation, 10. Elasticity, 11. Fitness for being made into tubes, 12. Specific gravity—experiments were made to determine each of those conditions.

Tensile strength.—The result of trials by Mr. Anderson of Woolwich was—the average tenacity of this metal proved to be 22 tons 12 cwt. (50,624 lbs.) breaking weight per square inch. Elongations did not take place until 4,300 lbs. in the one case and 3,600 lbs. in the other had been applied, when a permanent elongation was noticed of ·009 of an inch in the first specimen and ·034 of an inch in the last

Resistance to compression.—The ultimate amount of compression applied was 59 tons 2 cwt. 1 qr. 4 lbs. (132,416 lbs.), under which the specimen became much distorted. "The specimen subjected to this enormous pressure, distorted though it is, does not exhibit the trace of a fissure. The cohesion of its particles is inviolate." Compression was not perceptible until 9 tons 2 cwt. per square inch (20,384 lbs.) was applied, when the specimen gave way to the extent of ·006 of an inch; and on the weight being removed an elasticity of ·001 was observed, which gives the first permanent compression as ·005 of an inch.

Malleability.—The quality of this metal for forging purposes would appear to be excellent. There were specimens in the International Exhibition of 1862 showing that the alloy could be drawn out under the hammer almost to a needle-point.

* The present price of aluminium in London is 5*s.* per ounce, whilst only in March 1856, just after M. Deville's experiments had been made, it cost 3*l.* per ounce.

Digitized by Google

Transverse strength.—These experiments were made by Messrs. Simms. The same weight applied to these bars altered the index of the instrument as under:—

Brass - - - - -	2·22 divisions
Gun Metal - - - - -	0·15 „
Aluminium Bronze - - - - -	0·05 „

Hence aluminium bronze is 3 times more rigid than gun-metal, and 44 times more rigid than brass.

Expansive ratio.—Aluminium bronze is affected by change of temperature a little less than gun-metal, and much less than brass.

Founding qualities.—The alloy produces admirable castings of any size.

Behaviour under files, cutting tools, &c.—"In this respect it leaves nothing to be desired. It does not clog the file; and in the lathe and planing-machine the tool removes long elastic shavings, leaving a fine, bright, smooth surface."

Resistance to atmospheric influences.—This alloy tarnishes much less readily than any metal usually employed—viz. gun-metal, brass, silver, cast-iron, or steel.

Fitness to receive graduation.—The lines are remarkably pure and equable, and very distinct under the microscope, notwithstanding the yellow colour of the metal.

Elasticity.—No wires tried for the suspension of Foucault's pendulum for illustrating the rotation of the earth were so durable—not even those of steel—under that severe ordeal as wires of aluminium bronze.

Fitness for being made into tubes.—It admits of every process necessary for this purpose.

Specific gravity.—The specific gravities of alloys of aluminium and copper, are:—

3	per cent of	aluminium	-	-	-	8·691
4	„	„	-	-	-	8·621
5	„	„	-	-	-	8·369
10	„	„	-	-	-	7·689

At the Elswick Works Captain Noble, R.A., confirmed previous experiments on the capability of aluminium bronze to resist longitudinal and transverse fracture; and in addition to this he ascertained that its position to withstand compression stood halfway between that of the finest steel and the best iron.

The bronze, containing 10 parts of aluminium and 90 of copper, affords an alloy endowed with the greatest strength, malleability, and ductility. The colour of the copper is affected by a very trifling addition of the other constituent, and the alloy gradually improves in these valuable qualities just mentioned, until the proportions given above are reached. After this—*i.e.* when more than ten per cent. of aluminium enters into the composition of the bronze—the alloy gradually becomes weaker and less malleable, and at length so brittle that it is easily pounded in a mortar.

ALUMINIUM, CHLORIDE OF (Al^2Cl^3—133·9). *Preparation.*—Chloride of aluminium cannot be prepared by treating alumina with hydrochloric acid, as in the case of most chlorides; for on evaporating the solution to dryness, hydrochloric acid is evolved and alumina alone remains.

The method at present used is, in principle, the same as that originally suggested by Œrsted, which has since found numerous other applications. It is impossible to convert alumina into the chloride by the direct action of chlorine alone; at any temperature the chlorine is as incapable of displacing the oxygen from the alumina as it would from lime. But if the attraction of the chlorine for the metal be supported by the affinity of carbon for the oxygen, then the compound is, as it were, torn asunder—carbonic acid or carbonic oxide resulting on the one hand, and the chloride of aluminium on the other.

On the large scale the chlorine is passed over a previously ignited mixture of clay and coal-tar, contained in retorts like those used in the manufacture of coal-gas, which are heated in a furnace; the chloride, which on account of its volatility is carried off, being condensed in a chamber lined with plates of earthenware, where it is deposited in a crystalline mass.

Properties.—It is a yellowish crystalline solid, readily decomposed by the moisture of the air into hydrochloric acid and alumina, volatile at a dull red heat. It is very soluble in water, but cannot be recovered by evaporating the solution.—H. M. W.

ALUMINIUM, FLUORIDE OF. (Al^2F^6) The existence of the fluoride of aluminium in nature, the form of the double fluoride of sodium and aluminium, namely, NaF, Al^2F^6, as kryolite, and the use of this mineral in the manufacture of aluminium, has been already alluded to. The fluoride of aluminium likewise exists in two other minerals, namely, the topaz $[3(Al^2O^3, SiO^3) + (Al^2O^3 + Al^2F^3)]$ and pycnite, $3(Al^2O^3, SiO^3) + Al^2F^3$.*

The pure fluoride can only be obtained artificially by dissolving pure aluminium

* Graham's Elements of Chemistry, i. 605.

Digitized by Google

in hydrofluoric acid. It has a great tendency to form double salts with the fluorides of potassium and sodium.—H. M. W.

ALUM, NATIVE. This term includes several compounds of sulphate of alumina with the sulphate of some other base, as magnesia, potash, soda, the protoxides of iron, manganese, &c. They occur generally as efflorescences, or in fibrous masses; when crystallised they assume octahedral forms, are soluble in water, and have an astringent taste.

ALUM, ROMAN (*Alumen Romanum. Alume di rocca*, It.), called sometimes *Roch* or *Rock Alum*. See ALUM.

ALUM SHALE. The chief natural source from which the alum of commerce is derived in this country. It occurs in a remarkable manner near Whitby, in Yorkshire, and at Hurlet and Campsie, near Glasgow. A full description of the alum shale, and of the processes by which the crystallisable alum is separated, will be found under ALUM.

ALUNITE, or ALUMSTONE (*Alun*, Fr.; *Alaunstein*, Germ.). This mineral is composed of alumina 37·13, sulphuric acid 38·53, potash 11·34, water 13·00. Silica is also frequently present as an impurity, sometimes to the extent of 60 per cent. It is a white, greyish, or reddish mineral, affording a white streak, and an uneven, flat, conchoidal fracture, which is splintery in the massive varieties. It is transparent or subtranslucent.

Alumstone is one of the sources of the alum of commerce, which is obtained from it in crystals after frequent roasting, and lixiviation in water.

Alumstone is found at Tolfa, near Civita Vecchia, in the Roman States (sometimes in crystals); at Elizabethpol, in Georgia; at Pic de Saucy, in France, and in the Grecian Archipelago. The compact varieties from Hungary are so hard as to be used for millstones.—*Dana*.

AMADOU. (*Amadou*, Fr.; *Zunderschwamm*, Gr.) The name of a spongy combustible substance, prepared from a species of agaric, the *boletus igniarius*, which grows on the trunks of cherry trees, ashes, beeches, &c.; it is sometimes known as *spunk*, and as touchwood, but commonly in this country it is called *German tinder*. It must be plucked in the months of August and September. This plant grows horizontally on the several trees on which it is indigenous: when it makes its first appearance it is a little round wart-like body, not larger than a pea; it gradually increases in size and hardness till it becomes of a darkish brown, and is as large as an apple. It afterwards takes a horizontal direction, forms a border, and becomes covered with numerous closely-packed tubes on its under-surface. The *Boletus fomentarius* is another indigenous fungus, found on the oak and birch. This is also used in preparing *Amadou*. It was formerly used in surgery, and has hence been called Surgeon's Agaric. Amadou is prepared by removing the outer bark with a knife, and separating carefully the spongy substance—of a yellow brown colour, which lies within it—from the ligneous matter below. This substance is cut into thin slices, and beaten with a mallet to soften it, till it can be easily pulled asunder between the fingers. In this state the *boletus* is a valuable substance for stopping oozing hæmorrhages, and some other surgical purposes. To convert it into tinder it must receive a finishing preparation, which consists in boiling it in a strong solution of nitre; drying it, beating it anew, and putting it a second time into the solution. Sometimes, indeed, to render it very inflammable, it is imbued with gunpowder, whence the distinction of black and brown amadou.

All the puff-balls of the *lycopodium* genus of plants, which have a fleshy or filamentous structure, yield a tinder by soaking in gunpowder water. The Hindoos employ a leguminous plant, which they call *solu*, for the same purpose. Its thick spongy stem, being reduced to charcoal, takes fire like amadou. See AGARIC.

AMALGAM. When mercury is alloyed with any metal, the compound is called an amalgam of that metal; as, for example, an amalgam of tin, bismuth, &c.

Some amalgams are solids and others fluids; the former are often crystalline, and the latter may be probably regarded as the solid amalgam dissolved in mercury.

Silver Amalgam may be formed by mixing finely-divided silver with mercury. The best process is to precipitate silver from its solution by copper, when we obtain it in a state of fine powder, and then to mix it with the mercury.

A native amalgam of mercury and silver occurs in fine crystals in the mines of the Palatinate of Moschellandsberg: it is said to be found where the veins of copper and silver intersect each other. Dana reports its existence in Hungary and Sweden, at Allemont, in Dauphiné; Almaden, in Spain, and in Chili; and he quotes the following analyses:—

	Silver.	Mercury.
Moschellandsberg	36·0	64·0 by Klaproft.
Ditto	25·0	73·3 „ Heyer.
Allemont	27·5	72·5 „ Cordier.

If six parts of a saturated solution of nitrate of silver with two parts of a saturated

Digitized by Google

solution of the protonitrate of mercury are mixed with an amalgam of silver one part and mercury seven, the solution is speedily filled with beautiful arborescent crystals —the *Arbor Dianæ*, the tree of Diana,—or the silver tree.

Gold Amalgam is made by heating together mercury with grains of gold, or gold-foil; when the amalgam of gold is heated, the mercury is volatilised and the gold left. This amalgam is employed in the process known as that of fire gilding, although, since electro-gilding has been introduced, it is not so frequently employed. A gold amalgam is obtained from the platinum region of Columbia; and it has been reported from California, especially from near Mariposa. Schneider gives its composition, mercury, 57·40; gold, 38·89; silver, 5·0.

Tin Amalgam.—By bringing tinfoil and mercury together, this amalgam is formed, and is used for silvering looking-glasses. (See SILVERING GLASS.) If melted tin and mercury are brought together in the proportion of three parts mercury and one part tin, the tin amalgam is obtained in cubic crystals.

Electric Machine Amalgam.—Melt equal parts of tin and zinc together, and add three parts of mercury; the mass must be shaken until it is cold, and rubbed down with some lard to give it the proper consistence.

Sodium Amalgam, used for separating gold from its ores. See GOLD, SILVER.

Copper Amalgam.—The French dentists have long made use of this for stopping teeth. It is sold in small rolls of about a drachm and a half in weight; it is covered with a greyish tarnish, has a hardness much greater than that of bone, and its cohesion and solidity are considerable. When heated nearly to the point of boiling water this amalgam swells up, drops of mercury exuding, which disappear again on the cooling of the substance. If a piece, thus heated, be rubbed up in a mortar, a plastic mouldable mass, like poor clay, is obtained, the consistence of which may, by continued kneading, be increased to that of fat clay. If the moulded mass be left for ten or twelve hours, it hardens, acquiring again its former properties, without altering its specific gravity. Hence the stopping, after it has hardened, remains tightly fixed in the hollow of the tooth. The softening and hardening may be repeated many times with the same sample. Pettenkofer ascribes these phenomena to a state of amorphism, with which the amalgam passes from the crystalline condition in the process of softening. All copper amalgams containing between 0·25 to 0·30 of copper exhibit the same behaviour. The above chemist recommends, as the best mode of preparing this amalgam, that a crystalline paste of sulphate of suboxide of mercury (prepared by dissolving mercury in hydrated sulphuric acid at a gentle heat) be saturated under water at a temperature of from 60° to 70°, with finely divided reguline copper (prepared by precipitation from sulphate of copper with iron). One portion of the copper precipitates the mercury, with formation of sulphate of copper; the other portion yields with mercury an amalgam: 100 parts of dissolved mercury require the copper precipitated, by iron, from 232·5 parts of sulphate of copper. As in dissolving the mercury the protoxide is easily formed instead of the suboxide, particularly if too high a temperature be maintained, it is advisable, in order to avoid an excess of mercury in the amalgam, to take 223 parts of sulphate of copper, and to add to the washed amalgam, which is kept stirred, a quantity of mercury in minute portions, corresponding to the amount of suboxide contained in the mercury salt, until the whole has become sufficiently plastic. This amalgam may be obtained by moistening finely-divided copper with a few drops of a solution of nitrate of suboxide of mercury, and then triturating the metal with mercury in a warmed mortar. The rubbing may be continued for some time, and may be carried on under hot water, mercury being added until the required consistence is attained.

A remarkable depression of temperature during the combination of amalgams has been observed by several chemists.

Dobereiner states that when 816 grains of amalgam of lead (404 mercury and 412 lead) were mixed, at a temperature of 68°, with 688 grains of the amalgam of bismuth (404 mercury and 284 bismuth) the temperature suddenly fell to 30°, and by the addition of 808 grains of mercury (also at 68°) it became as low as 17°; the total depression amounting to 51°.

In certain proportions of mixture of the constituents of fusible metal (tin, lead, and bismuth) with mercury, Dobereiner formed surprising depressions of temperature; the temperature, he records of one experiment, sank instantly from 65° to 14°.

AMALGAMATION. See GOLD and SILVER.

AMARINE. (C^{42} H^{18} N^2) An organic base produced from bitter-almond oil.

AMAZON STONE. A bluish-green variety of Felspar (Orthoclase). It is found at Lake Ilmen in Russia of a verdigris-green variety. That from Baikai in Siberia is composed of silvery spangles in a green base, of which small vases and other ornaments are made.

AMBAR, LIQUID. (*Ambre, Liquide*, Fr.) In former editions of this Dictionary, the

Digitized by Google

liquid-ambar, as it was called, was confounded with liquid storax or styrax. It is obtained from the *liquid-ambar styraciflua* of Linnæus, growing in Louisiana and Mexico, whereas the *storax* is procured chiefly—it is now entirely—from Trieste; and it is extracted from the *styrax officinalis*, which grows in various parts of Greece. Pereira, quoting Buchner's "Repertorium," informs us that the storax is known in the East as *buchuri-jag*. Liquid-ambar is rarely used in any art or manufacture. It is brownish ash-grey, of the consistence of turpentine, dries up readily, smells agreeably, like benzoin, has a bitterish, sharp, burning taste; is soluble in 4 parts of alcohol, and contains only 1·4 per cent. of benzoic acid.

AMBER. (*Succin*, Fr.; *Bernstein*, Germ.) The *Electron* of the Greeks, to whom this substance appears to have been well known. From its peculiar property of manifesting electrical phenomena, we have derived our word, *electricity*. It appears to have been known to the Romans under the names of *lyncurium*, and, because of its supposed vegetable origin, *succinum*. The ancients also gave the name *electrum* to a yellow metal containing gold and silver. See ELECTRUM.

Amber is a mineral solid, of a yellow colour of various shades, which burns quite away with flame, and consists of carbon, hydrogen, and oxygen, in nearly the same proportions, and in the same state of combination, as vegetable resin. The chemical composition, according to *Schrötter*, is:—

Carbon	78·82
Hydrogen	10·22
Oxygen	10·9

Its specific gravity varies, by Dr. Ure's trials, from 1·080 to 1·085. It becomes negatively and powerfully electrical by friction. When applied to a lighted candle it takes fire, swells considerably, and exhales a white smoke of a pungent odour; but does not run into drops. Copal, which resembles it in several respects, differs in being softer, and in melting into drops at the flame; and mellite, or honey-stone, which is a mineral of a similar colour, becomes white when laid on a red-hot coal.

The texture of amber is resino-vitreous, its fracture conchoidal, and lustre glassy. It is perfectly homogeneous; sufficiently hard to scratch gypsum, and to take a fine polish. It is, however, scratched by calcareous spar. When amber is distilled in a retort, crystalline needles of succinic acid sublime into the dome, and oil of amber drops from the beak into the receiver. Fossil resins, such as that of Highgate, found in the London clay formation, do not afford succinic acid by heat; nor does copal. Amber is occasionally found of a whitish and brownish colour. The Rev. F. W. Hope, F.R.S., in his paper on the "Succinic Insects," states them to be altogether extra-European. "Amber is occasionally met with in the gravel-pits near London, and I have seen specimens which were found in Hyde Park. At Aldborough after a raking tide, it is thrown on the beach in considerable quantities, along with masses of jet.—*Rev. F. W. Hope*, Trans. Ent. Soc.

The most interesting fact relative to this vegeto-mineral is its geological position, which is very characteristic and well determined. It is found almost uniformly in separate nodules, disseminated in the sand, clay, or fragments of lignite of the plastic clay formation, situated between the *calcaire grossier* (crag limestone) of the tertiary strata above, and the white chalk below. The size of these nodules varies from a nut to a man's head; but this magnitude is very rare in true amber. It does not occur either in continuous beds, like the chalk flints, or in veins; but it lies at one time in the earthy or friable strata which accompany or include the lignites; at another entangled in the lignites themselves. The pieces of amber found in the sands, and other formations evidently alluvial, those met with on the sea-coasts of certain countries, and especially Pomerania, come undoubtedly from the above geological formation; for the organic matters found still adhering to the amber leave no doubt as to its primitive place. Amber does not, therefore, belong to any postdiluvian or modern soil, since its native bed is covered by three or four series of strata, often of considerable thickness, and well characterised, proceeding upwards from the plastic clay which includes the amber: these are, the crag limestone, the bone gypsum, with its marls, the marly limestone, the upper marl sandstone, which covers it, and, lastly, the freshwater or lacustrine formation, often so thick, and composed of calcareous and siliceous rocks.

The amber bed is not, however, always covered with all these strata; and it is even rare to see a great mass of one of them above the ground which contains it: because, were it buried under such strata, it would be difficult to meet with such circumstances as would lay it spontaneously open to the day. The true yellow amber belongs therefore to the Plastic clay formation intermediate in England between the chalk and the London clay. The vegetable origin of amber is satisfactorily determined by its chemical composition,—its optical properties, as shown by Sir David Brewster,—and by the condition in which insects and the remains of insects

Digitized by Google

are found in this resin, along with fragments of leaves and stalks. Certain families of insects occur more abundantly than others. Thus the *hymenoptera*, or insects with four marked membranaceous wings, as the bee and wasp, are not abundant. The *diptera*, or insects with two wings, as gnats and flies, are more numerous. Then come the spider tribe, some *coleoptera* (insects with crustaceous shells or elytra, which shut together and form a longitudinal suture down the back), or beetles—principally those which live on trees, as the *elaterides*, or leapers, and the *chrysomelida*. The insects appear evidently to have struggled after being entangled in the then viscous fluid, and occasionally a leg or a wing is found at some distance from the body, which had been detached in the efforts of the insect to escape from the resin. Göppert has named the tree supposed to have yielded the amber, *Pinites succinifer*.

Germar and Schweiger state that the insects enveloped in amber are in general such as sit on the trunks of trees, or live in the fissures of their bark. These naturalists have not been able to refer them to any living species; but it has been observed that they resemble more the insects of hot climates than those of the temperate zones. D. T. Tessler sent to the Exhibition in 1851, a piece of amber containing the leg of a toad. Amber is found abundantly on the Prussian coast of the Baltic, occuring from Dantzic to Memel, especially between Pillau and Dorfe Gross-Hubnicken. It occurs also on the coast of Denmark and Sweden; in Gallicia, near Lemberg, and at Missan, in Poland; in Moravia, at Boskowitz; in the Uralian Mountains, Russia; near Christiania, Norway; in Switzerland, near Basle, and other places. Small quantities are occasionally found in the clay of the Paris and the London basins. On the Sicilian coast amber is sometimes found having a peculiar blue tinge.

Amber is collected on the coast of Prussia in several ways. It is found in the beds of streams; in the sand-banks of rivers; in pieces thrown up by the sea and rounded by the waves; it is sought for in the cliffs, and in some places mining operations for it are carried on.

The amber fishers, clothed in leather dresses, wade into the sea, and seek to discover the amber floating on its surface, which they secure with bag nets hung at the ends of long poles. They conclude that much amber has been detached from its bed, when they discover many pieces of lignite floating about. Mining is carried on by sinking through the sand and superficial strata to the beds containing the amber and lignite; many of these pits are sunk to the depth of 130 feet. The faces of the precipitous cliffs are explored in boats, and masses of loose earth or rock supposed to contain the object of search are detached with long poles having iron hooks at their ends.

The most extensive use of amber is for the construction of mouth-pieces to pipes; these form an essential constituent of the genuine meerschaum and the Turkish pipe. There is a current belief in Turkey that amber is incapable of transmitting infection, and as it is a great mark of politeness to offer the pipe to a stranger, this supposed negative property of amber accounts in some measure for the estimation in which it is held. Amber necklaces are not uncommon: the Russian peasant girls adorn themselves with double and treble rows of amber beads, but it not unfrequently happens that copal is substituted for the genuine article.

The Prussian government is said to draw an annual revenue of 17,000 dollars from amber. A good piece of a pound weight fetches 50 dollars. A mass weighing 13 pounds has been found, the value of which at Constantinople was said to be not less than 30,000 dollars.

When amber is to be worked into trinkets, it is first split on a leaden plate at a lathe, and then smoothed into shape on a Swedish whetstone. It is polished on the lathe with chalk and water, or vegetable oil, and finished by friction with flannel.

Amber, after having been filed, may be polished with Trent sand, or scraped Flanders brick, on flannel with water, or with rottenstone with oil on flannel, or the same material dry on the hand. Turned works are, however, generally polished first with glass-paper and then with rottenstone and oil. Necklaces and other ornaments in amber are frequently cut into facets by the gold cutters, those artisans who cut and polish facetted works.—*Holtzapffel.*

From the electrical character of amber, it frequently during the process of polishing becomes so excited as to crack and fly to pieces. The workmen therefore take several pieces, and work them each for a short time and in regular order. These men are said to be seized with nervous tremors in their wrists and arms from the electricity thus developed.

Pieces of amber may be neatly joined by smearing their edges with linseed oil and pressing them strongly together while they are held over a charcoal fire.

In 1863 we imported of Rough Amber 70 cwt., valued at 627*l.*; and manufactured amber to the value of 87*l.* This does not appear to comprehend the amber mouth-pieces to pipes.

Digitized by Google

AMBER, ACID OF. See SUCCINIC ACID.

AMBER, OIL OF. (*Oleum succini.*) This is obtained by distilling amber, for which purpose chippings of amber and inferior pieces are used. When it is distilled with charcoal, the first product is the *rectified oil of amber*. The oil of amber has a composition C^{20} H^{16}. When 1 part of rectified oil of amber is dissolved in 24 parts of alcohol of ·830, and 96 of caustic ammonia of ·916, *eau de luce* is formed. Eau de luce was a celebrated old perfume, but it is now rarely made.

If nitric acid is poured into *eau de luce* a viscid resinous mass is formed, which has the smell of musk, and is known as *artificial musk*. Formerly this preparation, dissolved in alcohol, was considered as a specific in whooping-cough, and it was frequently administered in spasmodic diseases.

AMBER VARNISH. A strong and durable varnish is made by dissolving amber in drying linseed oil. The amber is, however, previously heated in an iron pot, over a clear red fire, till it softens and assumes a semifluid form. The oil, which has been also made hot, is to be poured on the melted amber, and the mixture diligently stirred.

The following proportions are stated to be the best:—16 ounces of amber and 10 ounces of linseed oil. When these are, by the above method, thoroughly incorporated, and the liquid is somewhat cooled, a pound of oil of turpentine must be added.

Black coachmaker's varnish is prepared by melting 16 ounces of amber and adding thereto about half a pint of boiling-hot drying linseed oil, 3 ounces of asphaltum, and the same quantity of resin. After these have been thoroughly mixed over the fire, the vessel containing the varnish is removed, and, after cooling, a pint of warm oil of turpentine is added.

Amber is composed of a mixture of two resins, which are soluble in alcohol and ether, and in some of the recently-discovered hydrocarbon compounds. Varnishes are therefore prepared with them, and sold under the name of *amber spirit varnishes*; but these are frequently composed of either copal or mastic. They have been much used for varnishing collodion pictures.

AMBERGRIS. (*Ambregris*, Fr.; *Ambra*, Germ.) A morbid secretion from the liver and intestines of the spermaceti whale (*Physeter macrocephalus*). It is found usually swimming on the sea upon the coasts of Coromandel, Japan, the Moluccas, and Madagascar, and also on various parts of the east coast of Africa. Ambergris has not been found in any whales but such as have been dead or sick; its production has therefore been attributed to disease. As portions of the food of the whale are invariably found in any large pieces of ambergris, there is little doubt that it originates in the intestines of that animal.

The best ambergris is ash-coloured, with yellow or blackish veins or spots, scarcely any taste, and very little smell unless heated or much handled, when it yields an agreeable odour. Exposed in a silver spoon it melts without bubble or scum, and on the heated point of a knife it vaporises completely away.

The Chinese try the genuineness of ambergris by scraping it fine upon boiling tea; it should dissolve and diffuse itself generally. Black or white is bad; the smooth and uniform is generally factitious. It has often a black streak, or is marbled yellow and black; has a fatty taste, is lighter than water, melts at 60° C. (140° F.), dissolves readily in absolute alcohol, in ether, and in both fat and volatile oils. It contains $85\frac{2}{3}$ of the fragrant substance called *ambreine*.

The chemical composition of ambergris is represented by the following formula, C^{30} H^{52} O. True ambergris is very rarely met with, by far the largest proportion of that which is sold as ambergris being a preparation scented with *civet* or *musk*. The alcoholic tincture of ambergris is highly fluorescent in sunlight, exhibiting a characteristic yellow green rim on the surface of the solution. This is a test by which genuine ambergris may be distinguished from such as is spurious.

Capt. Alex. Hamilton, in his "Thirty Years' Experience," says, "Sometimes, in the south-west monsoons, they find ambergrease floating on the sea. I saw a piece in Adda Rajah's possession as big as a bushel; and he valued it at 10,000 rupees, or 1.250*l.* sterling." This was at the Laccadive Islands, 170 miles from the Malabar Coast.—*New Account of the East Indies*, 1688 *to* 1730.

In France the duty upon ambergris is 62 francs per kilogramme when imported in French vessels, and 67 francs when imported in foreign vessels.

Ambergris is at this time (1865) worth 20*s.* an ounce in England. Mr. Temple, of British Honduras, speaks of an odorous substance thrown off by the alligator, which appears to resemble ambergris.

AMBREINE. The fragrant substance of ambergris, which may be obtained by digesting ambergris in hot alcohol, from which, on cooling, it is deposited in a crystalline form. It is composed of C 88·37, H 3·32, O 3·31.

AMETHYST (*Améthyste occidentale*, Fr.; *Eisenkeisel*, Germ.) One of the vitreous varieties of quartz, composed of pure silica in the insoluble state—that is, it

Digitized by Google

will not dissolve in a potash solution. It belongs to the rhombohedral system, and is found either in groups of crystals or lining the interior of geodes and pebbles. It is infusible before the blowpipe, and is not affected by acids. It is of a clear purple or bluish-violet tint; but the colour is frequently irregularly diffused, and gradually fades into white. The colour is supposed to be due to the presence of a small percentage of manganese, but Heintz attributes it to a compound of iron and soda. The amethyst, from the beauty of its colour, has always been esteemed and used in jewellery. It was one of the stones called by the ancients ἀμέθυστος, a name which they conferred on it from its supposed power of preserving the wearer from intoxication. The most beautiful specimens are procured from India, Ceylon, and Persia, where they occur in geodes and pebbles: it is also found at Oberstein, in Saxony; in the Palatinate; in Transylvania; near Cork, and in the Island of May, in Ireland.—H. W. B.

AMETHYST, ORIENTAL. (*Améthyste orientale*, Fr.; *Demanthspath*, Germ.) This term is applied to those varieties of corundum which are of a violet colour. See CORUNDUM.—H. W. B.

AMIANTHUS is the name given to the whiter and more delicate varieties of asbestos, which possess a satin-like lustre, in consequence of the greater separation of the fibres of which they are composed. A variety of amianthus (the amianthoide of Haüy) is found at Oisans, in France, the fibres of which are in some degree elastic. The word amianthus (from ἀμίαντος, undefiled) is expressive of the easy manner by which, when soiled, it may be cleansed and restored to its original purity, by being heated to redness in a fire. See ASBESTOS.—H. W. B.

AMIDE. This term and *amidogen* are applied to a class of substances which contain ammonia deprived of an atom of hydrogen.

AMIDINE. A name given to the soluble portion of starch.

AMINES. Chemical substances resembling *Amides*, but containing basic radicals. See Watt's "Dictionary of Chemistry."

AMIDON. The name for starch on the Continent.

AMMONIA. NH^3, *eqv.* 17. (*Ammoniaque*, Fr.; *Ammoniak*, Germ.) The name given to the alkaline gas which is the *volatile alkali* of the early chemists. The real origin of this word is not known. Some suppose it to be from *Ammon*, a title of Jupiter, near whose temple in Upper Egypt it was generated. Others suppose it to be from *Ammonia*, a Cyrenaic territory; whilst others again have deduced it from ἄμμος, sand, as it was found in sandy ground.

It is propable that Pliny was acquainted with the pungent smell of ammonia. Dr. Black, in 1756, first isolated it, proving the distinction between it and its carbonate, with which it had been confounded up to that time; and it was soon afterwards more fully investigated by Priestley.

Ammonia being a product, not only of the destructive distillation of organic bodies containing nitrogen, but also of their decay, it exists in the atmosphere, in a large amount, if considered in the aggregate, although, by examining any particular specimen of air, the quantity appears small. Nevertheless, this small quantity of ammonia would seem to be exceedingly important in developing the nitrogenised constituents of plants. Liebig believes that the nitrogen of plants is exclusively derived from the ammonia present in the air; but the opinions of chemists are divided on this point. Boussingault* supports Liebig's view, but it is opposed by Mulder and Ville.

From the air, ammonia and its salts are carried down by the rain. This fact has been placed beyond all doubt by Liebig; and even the variations in the quantity have been determined by Boussingault, and more recently by Mr. Way. By the rain water it is carried into rivers, and ultimately into the sea, in which choride of ammonium has been detected by Dr. Marcet. It has likewise been detected in mineral springs, especially brine springs, and even in common salt.—*Vogel.*

Ammonia is present in the exhalations from volcanoes. During the eruption of Vesuvius in 1794, the quantity of sal ammoniac discharged by the mountain was so great, that the peasants collected it by hundredweights (*Bischof*); and in the last eruption of Hecla, in Sept., 1845, a similar phenomenon was observed; and, according to Ferrara, it is sometimes found in such quantity at Etna, that a very profitable trade has been carried on in it. Dr. Daubeny thinks that the volcanic ammonia is produced by the action of water upon mineral nitrides (perhaps the nitrides of silicon), similar in properties to the nitrides of Titanium and Boron, which have been recently more carefully examined M. St. Claire Deville. Ammoniacal salts have likewise been found as a sublimate arising from the combustion of coal strata.

The great supply of ammonia and its salts is derived from the destructive distillation of organic bodies, animal and vegetable, containing nitrogen; but its salts exist in plants, and to a much larger extent in the liquid and solid excrements of animals. As a urate, it forms the chief constituent of the excrement of the boa, as well as that of many birds, hence the large quantity of ammoniacal salts in guano. See GUANO.

* Annales de Chimie et de Physique, xliii. 149.

Digitized by Google

Formation of Ammonia.—No process has yet been devised for inducing the direct combination of nitrogen and hydrogen to produce ammonia; but under the disposing influence of the production of other compounds, in the presence of these elements, as well as when these gases are presented to each other in the nascent state, their union is effected.

Thus, when electric sparks are passed through a mixture of nitrogen and oxygen in the presence of hydrogen and aqueous vapour, nitrate of ammonia is generated. If, while zinc is being dissolved in sulphuric acid, nitric acid be added, much ammonia is formed (*Nesbit*); so again, if hydrogen and binoxide of nitrogen be passed over spongy platinum, torrents of ammonia are produced, the hydrogen converting the oxygen of the binoxide into water, when the nitrogen, at the moment of its liberation, combines with the hydrogen to form ammonia.

It has even been proposed to carry out this last method on a manufacturing scale.

Messrs. Crane and Jullien, in their patent of January 18, 1848, describe a method of manufacturing ammonia in the state of carbonate, hydrocyanate, or free ammonia, by passing any of the oxygen compounds of nitrogen, together with any compound of hydrogen and carbon, or any mixture of hydrogen with a compound of carbon or even free hydrogen, through a tube or pipe containing any *catalytic* or contact substance, as follows:—Oxides of nitrogen (such for instance as the gases liberated in the manufacture of oxalic acid), however procured, are to be mixed in such proportion with any compound of carbon and hydrogen, or such mixture of hydrogen and carbonic oxide or acid as results from the contact of the vapour of water with ignited carbonaceous matters, and the hydrogen compound or mixture containing hydrogen may be in slight excess, so as to ensure the conversion of the whole of the nitrogen contained in the oxide so employed into either ammonia or hydrocyanic acid, which may be known by the absence of the characteristic red fumes on allowing some of the gaseous matter to come in contact with atmospheric air. The catalytic substance which Messrs. Crane and Jullien prefer is platinum, which may be in the state of sponge, or it may be asbestos coated with platinum. This catalytic substance is to be placed in a tube, and heated to about 600° F., so as to increase the temperature of the product, and at the same time prevent the deposition of carbonate of ammonia, which passes onwards into a vessel of the description well known and employed for the purpose of condensing carbonate of ammonia. The condenser for this purpose must be furnished with a safety pipe, to allow of the escape of uncondensed matter, and made to dip into a solution of any substance capable of combining with hydrocyanic acid or ammonia where they would be condensed. A solution of salt of iron is preferable for this purpose.*

Chemical Characters.—The gaseous ammonia liberated from its salts by lime (in a manner to be afterwards described) is a colourless gas of a peculiar pungent odour. It is composed, by weight, of 1 equivalent of nitrogen and 3 of hydrogen; or, by volume, of 2 measures of nitrogen and 6 of hydrogen, condensed to four; and may be resolved into these constituent gases by passing over spongy platinum heated to redness. By a pressure of 6·5 atmospheres at 50° F., it is condensed into a colourless liquid. It is combustible, but less so than hydrogen on account of the incombustible nitrogen which it contains; but its inflammability may be readily seen by passing it into an argand gas flame reduced to a minimum.

Ammonia is very soluble in water, cold water absorbing no less than 500 times its volume of this gas; and the solution has a less density and a lower boiling point than pure water. The following Table of the density of solutions of ammonia in water, of different strengths, is by Dr. Ure:—

Ammonia in 100.	Water in 100.	Specific Gravity by Experiment.	Ammonia in 100.	Water in 100.	Specific Gravity by Experiment.
26·500	73·500	0 9000	13·250	86·750	0·9455
25·175	74·825	0·9045	11·925	88·075	0·9510
23·850	76·150	0·9090	10·600	19·400	0·9564
22·525	77·475	0·9133	9 275	90·725	0·9614
21·200	78·800	0·9177	7·950	92·050	0·9662
19·875	80·125	0·9227	6 625	93·375	0 9716
18·550	81·450	0·9275	5·300	94·700	0·9768
17·225	82·775	0·9320	3·975	96 025	0·9828
15·900	84·100	0·9363	2·650	97·350	0·9887
14·575	85·425	0·9410	1·325	98·675	0·9945

* Pharm. Journ. xiii. 114.

Digitized by Google

Upon this variation in density of solutions of ammonia in proportion to their strength, Mr. J. J. Griffin has constructed a useful instrument called an *Ammonia-meter*. It is founded upon the following facts:—That mixtures of liquid ammonia with water possess a specific gravity which is the mean of the specific gravities of their components; that in all solutions of ammonia, a quantity of anhydrous ammonia, weighing 212½ grains, which he calls a *test-atom*, displaces 300 grains of water, and reduces the specific gravity of the solution to the extent of ·00125; and, finally, that the strongest solution of ammonia which it is possible to prepare at the temperature of 62° F. contains in an imperial gallon of solution 100 test-atoms of ammonia.

We extract the following paragraph from Mr. Griffin's paper in the Transactions of the Chemical Society, explanatory of the accompanying Table.

"The first column shows the *specific gravity* of the solutions; the second column the *weight* of an imperial gallon in pounds and ounces; the third column the *per-centage* of ammonia by weight; the fourth column the *degree* of the solution, as indicated by the instrument, corresponding with the number of *test-atoms* of ammonia present in a gallon of the liquor; the fifth column shows the number of *grains* of ammonia contained in a gallon; and the sixth column the *atomic volume* of the solution, or that *measure* of it which contains one test-atom of ammonia. For instance, one gallon of liquid ammonia, specific gravity 880, weighs 8 lbs. 128 oz. avoirdupois; its per-centage of ammonia, by weight, is 33·117; it contains 96 test-atoms of ammonia in one gallon, and 20400·0 grains of ammonia in one gallon; and, lastly, 104·16 septems containing one test-atom of ammonia. Although no hydrometer, however accurately constructed, is at all equal to the Centigrade mode of chemical testing, yet the Ammonia-meter, and the Table accompanying it, will be found very useful to the manufacturer, enabling him not only to determine the actual strength of any given liquor; but the precise amount of dilution necessary to convert it into a liquor of any other desired strength, whilst the direct quotation of the number of grains of real ammonia contained in a gallon of solution of any specific gravity will enable him to judge at a glance of the money-value of any given sample of ammonia.

Table of Liquid Ammonia (Griffin).

One Test-Atom of Anhydrous Ammonia = NH^3 weighs 212·5 grains. Specific Gravity of Water = 1·00000. One Gallon of Water weighs 10 lbs. and contains 10,000 Septems. Temperature 62° F.

Specific Gravity of the Liquid Ammonia.	Weight of an Imperial Gallon in Avoirdupois lbs. and ozs.		Per-centage of Ammonia by Weight.	Test-atoms of Ammonia in one Gallon.	Grains of Ammonia in one Gallon.	Septems containing one Test-atom of Ammonia.
	lb.	oz.				
·87500	8	12·0	34·694	100	21250·9	100·00
·87625	8	12.2	34·298	99	21037·5	101·01
·87750	8	12·4	33·903	98	20825·0	102·04
·87875	8	12·6	33·509	97	20612·5	103 09
·88000	8	12·8	33·117	96	20400·0	104·16
·88125	8	13·0	32·725	95	20187·5	105·26
·88250	8	13·2	32·335	94	19975·0	106 38
·88375	8	13·4	31·946	93	19762·5	107·53
·88500	8	13·6	31·558	92	19550·0	108·70
·88625	8	13·8	31·172	91	19337·5	109·89
·88750	8	14·0	30·785	90	19125·0	111·11
·88875	8	14·2	30·400	89	18912·5	112·36
·89000	8	14·4	30·016	88	18700·0	113·64
·89125	8	14·6	29·633	87	18487·5	114·94
·89250	8	14·8	29·252	86	18275·0	116·28
·89375	8	15·0	28·871	85	18062·5	117·65
·89500	8	15·2	28·492	84	17850·0	119·05
·89625	8	15·4	28·113	83	17637·5	120·48
·89750	8	15·6	27·736	82	17425·0	121·95
·89875	8	15.8	27·359	81	17212·5	123·46
·90000	9	0 0	26·984	80	17000·0	125·00
·90125	9	0·2	26·610	79	16787 5	126·58
·90250	9	0·4	26·237	78	16575·0	128·21
·90375	9	0·6	25·865	77	16362·5	129·87
·90500	9	0·8	25·493	76	16150·0	131·58
·90625	9	1·0	25·123	75	15937·5	133·33

Digitized by Google

Table of Liquid Ammonia (continued).

Specific Gravity of the Liquid Ammonia.	Weight of an Imperial Gallon in Avoirdupois lbs. and ozs.		Per-centage of Ammonia by Weight.	Test-atoms of Ammonia in one Gallon.	Grains of Ammonia in one Gallon.	Septems containing one Test-atom of Ammonia.
	lb.	oz.				
·90750	9	1.2	24·754	74	15725·0	135·13
·90875	9	1·4	24·386	73	15512·5	136·98
·91000	9	1·6	24·019	72	15300·0	138·99
·91125	9	1·8	23·653	71	15087·5	140·85
·91250	9	2·0	23·288	70	14875·0	142·86
·91375	9	2·2	22·924	69	14662·5	144·93
·91500	9	2.4	22·561	68	14450·0	147·06
·91625	9	2·6	22·198	67	14237·5	149·25
·91750	9	2·8	21·837	66	14025·0	151·51
·91875	9	3·0	21·477	65	13812·5	153·85
·92000	9	3·2	21·118	64	13600·0	156·25
·92125	9	3·4	20·760	63	13387·5	158·73
·92250	9	3·6	20·403	62	13175·0	161·29
·92375	9	3·8	20·046	61	12962·5	163·93
·92500	9	4·0	19·691	60	12750·0	166 67
·92625	9	4·2	19·337	59	12537·5	169·49
·92750	9	4·4	18·983	58	12325·0	172·41
·92875	9	4·6	18·631	57	12112·5	175·44
·93000	9	4·8	18·280	56	11900·0	178·57
·93125	9	5·0	17·929	55	11687·5	181·82
·93250	9	5·2	17·579	54	11475·0	185·18
·93375	9	5·4	17·231	53	11262·5	188·68
·93500	9	5·6	16·883	52	11050·0	192·31
·93625	9	5·8	16·536	51	10837·5	196·08
·93750	9	6·0	16·190	50	10625·0	200·00
·93875	9	6·2	15·846	49	10412·5	204·08
·94000	9	6·4	15·502	48	10200·0	208·33
·94125	9	6·6	15·158	47	9987·5	212·77
·94250	9	6·8	14·816	46	9775·0	217·39
·94375	9	7·0	14·475	45	9562·5	222·22
·94500	9	7·2	14·135	44	9350·0	227·27
·94625	9	7·4	13·795	43	9137·5	232·56
·94750	9	7·6	13·456	42	8925 0	238·09
·94875	9	7·8	13·119	41	8712·5	243 90
·95000	9	8·0	12·782	40	8500·0	250·00
·95125	9	8·2	12·446	39	3287·5	256·41
·95250	9	8·4	12·111	38	8075·0	263·16
·94375	9	8·6	11·777	37	7862·5	270·27
·95500	9	8·8	11·444	36	7650·0	277·78
·95625	9	9·0	11·111	35	7437·5	285·71
·95750	9	9·2	10·780	34	7225·0	294·12
·95875	9	9·4	10·4490	33	7012·5	303·03
·96000	9	9·6	10·1190	32	6800·0	312·50
·96125	9	9·8	9·7901	31	6587·5	322·58
·96250	9	10·0	9·4620	30	6375·0	333·33
·96375	9	10·2	9·1347	29	6162·5	344·83
·96500	9	10·4	8·8083	28	5950·0	357·14
·96625	9	10·6	8 4827	27	5737·5	070·37
·96750	9	10·8	8·1580	26	5525·0	384·62
·96875	9	11·0	7·8341	25	5312·5	400·00
·97000	9	11·2	7·5111	24	5100·0	416·67
·97125	9	11·4	7·1888	23	4887·5	434 78
·97250	9	11·6	6·8674	22	4675·0	454·54
·97375	9	11·8	6·5469	21	4462·5	476·19
·97500	9	12·0	6·2271	20	4250·0	500·00
·97625	9	12·2	5·9082	19	4037·5	526·32
·97750	9	12·4	5·5901	18	3825·0	555·56
·97875	9	12·6	5·2728	17	3612·5	588·24
·98000	9	12·8	4·9563	16	3400·0	625·00
·98125	9	13·0	4·6406	15	3187·5	666·67

Digitized by Google

Table of Liquid Ammonia (continued).

Specific Gravity of the Liquid Ammonia.	Weight of an Imperial Gallon in Avoirdupois lbs. and ozs.	Per-centage of Ammonia by Weight.	Test-atoms of Ammonia in one Gallon.	Grains of Ammonia in one Gallon.	Septems containing one Test-atom of Ammonia.
	lb. oz.				
·98250	9 13·2	4·3255	14	2975·0	714·29
·98375	9 13·4	4·0111	13	2762·5	769·23
·98500	9 13·6	3·6983	12	2550·0	833·33
·98625	9 13·8	3·3858	11	2337·5	909·09
·98750	9 14·0	3·0741	10	2125·0	1000·00
·98875	9 14·2	2·7632	9	1912·5	1111·10
·99000	9 14·4	2·4531	8	1700·0	1250·00
·99125	9 14·6	2·1438	7	1487·5	1428·60
·99250	9 14·8	1·8352	6	1275·0	1666·70
·99375	9 15·0	1·5274	5	1062·5	2000·00
·99500	9 15·2	1·2204	4	850·0	2500·00
·99625	9 15·4	0·9141	3	637·5	3333·30
·99750	9 15·6	0·6087	2	425·0	5000·00
·99875	9 15·8	0·3040	1	212·5	10000·00
1·0000	10 lbs. Water.		0		

Ammoniacal gas combines directly with hydrated acids, forming a series of salts, the constitution of which is peculiar, and must be here briefly discussed, that the formula hereafter employed in describing them may be understood.

These compounds may be viewed as direct combinations of the ammonia with the hydrated acids; thus, the compound with

Hydrochloric acid	as the	- Hydrochlorate (NH^3, HCl).
Hydrosulphuric acid	„	- Hydrosulphate (NH^3, HS).
Sulphuric acid	„	- Hydrated sulphate (NH^3; HO, SO^3).
Nitric acid	„	- Hydrated nitrate (NH^3; HO. NO^5).
Carbonic acid	„	- Hydrated carbonate (NH^3; HO, CO^2).

But the close analogy of these compounds, in all their properties, to the corresponding salts of potash and soda has led chemists to the assumption of the existence of a group of elements possessing the characters of a metal, of a basyl or hypothetical metallic radical, called ammonium (NH^4), in these salts; which theory of their constitution brings out the resemblance to the potash and soda salts more clearly, thus:—

The chloride		And the chloride	
of potassium contains	- KCl.	of ammonium contains	- NH^4Cl.
— sulphide „	- KS.	— sulphide „	- NH^4S.
— sulphate of potassa „	- KO, SO^3	— sulphate of ammonia	- NH^4O, SO^3
— nitrate „ „	- KO, NO^5	— nitrate „	- NH^4O,NO^5
— carbonate „ „	- KO, CO^2	— carbonate „	- NH^4O, CO^2

Although it may be objected to this view that the metal ammonium is not known, yet a curious metallic compound of this metal with mercury has been obtained; and, after all, it is by no means necessary that the metal should be isolated, for already the existence of numerous basic radicals has been assumed in organic chemistry which have never been isolated.

It is true, also, that the oxide of ammonium is unknown, but substitution-products of it have been produced, which are solid bodies, soluble in water, exhibiting all the characters of potash solution, being as powerfully caustic and alkaline. In fact, ammonia is in reality but the type of a vast number of compounds. It is capable of having its hydrogen replaced by metals (as copper, mercury, calcium, &c.), as well as by metallic or basic compound radicals, producing the endless number of artificial organic bases, which are primary, secondary, or tertiary nitrides, according as one, two, or three equivalents of the ammonia is replaced. When the substitution of the hydrogen in ammonia is effected by acid radicals, the compounds are called amides.

Preparation of Ammonia. — Ammonia is obtained by the decomposition of one of

Digitized by Google

the salts of ammonia, either the chloride of ammonium, NH^4Cl (sal ammoniac), or the sulphate, by a metallic oxide, *e.g.* lime.

$$NH^4Cl + CaO, HO = CaCl + NH^3 + 2HO.$$

On the small scale in the laboratory the powdered ammoniacal salt is mixed with slaked lime, in a Florence flask or a small iron retort, and gently heated; the ammoniacal gas being dried by passing it through a bottle containing lime. Chloride of calcium must not be employed in the desiccation of ammonia, since the ammonia is absorbed by this salt, producing a curious compound, the chloride of caliammonium, $N\left\{\begin{matrix}H^2\\Ca\end{matrix}\right\}Cl$, being, in fact, one of those substitution-compounds before alluded to.

The gaseous ammonia must be collected over mercury, on account of its solubility in water.

This operation is carried out on the large scale for the purpose of making the aqueous solution of ammonia (*liquor ammonia*, or *spirits of hartshorn*).

Solution of Ammonia.

Preparation.— In preparing the aqueous solution, the gas is passed into water contained in Woolfe's bottles, which on the small scale are of glass, whilst on the large scale they are made of earthenware.

A sufficiently capacious retort of iron or lead should be employed, which is provided with a movable neck; and it is desirable to pass the gas through a worm, to cool it, before it enters the first Woolfe's bottle. Each of the series of Woolfe's bottles should be furnished with a safety-funnel in the third neck, to avoid accidents by absorption. The whole of the condensing arrangements should be kept cool by ice or cold water.

Properties.— In the London and in the Edinburgh "Pharmacopœia" two solutions of ammonia are directed to be prepared, the stronger having the specific gravity 0·882, and containing about 30 per cent. of ammonia; the weaker of specific gravity 0·960, containing, therefore, about 10 per cent. of the gas.

Sometimes the commercial solution of ammonia is made by treating impure ammoniacal salts with lime, and it then contains empyreumatic oils; in fact, the various volatile products of the distillation of coal which are soluble in or miscible with water.

Pyrrol may be detected in ammonia by the purple colour which it strikes with an excess of nitric or sulphuric acid. If the residue of its distillation be mixed with potash, Picoline is detected by its peculiar odour. Naphthaline is discovered not only by its odour, but may also be separated by sublimation or heating, after converting the ammonia in the solution into a salt by sulphuric or hydrochloric acid.— *Dr. Maclagan.*

We *imported* into England of sulphate and liquor of ammonia as follows:—

Ammonia, sulphate of	- -	1856 - -	lbs. 23,904
,, ,,	- -	1855 - -	343,609
Ammonia, liquor	- -	1855 - -	22,400

Since, for the purpose of purification on the large scale, ammonia is invariably converted into chloride or sulphate, the details of the manufacture of the ammoniacal salts will be given under those heads. For the determination of ammonia, see NITROGEN.—H. M. W.

AMMONIA, CARBONATE OF. (*The sesquicarbonate* of commerce, $2NH^3$, $3CO^2$, $2HO = NH^4O, CO^2$; $HO, CO^2 + NH^2CO^2$, *eqv.* 118.) This salt was probably

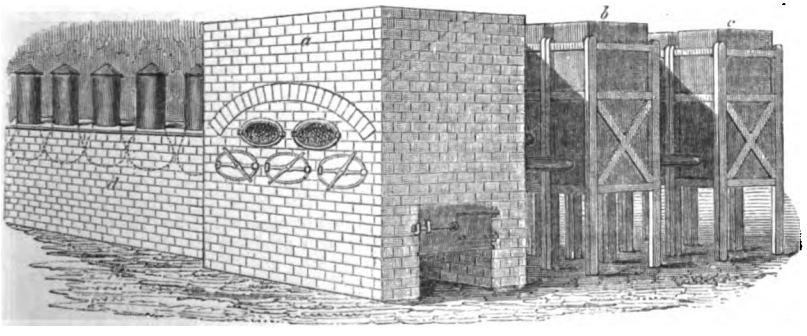

Digitized by Google

known to Raymond Lully and Basil Valentine, as the chief constituent of putrid urine. The real distinction between ammonia and its carbonate was pointed out by Dr. Black.

Carbonate of ammonia is formed during the putrefaction of animal substances, and by their destructive distillation. Its presence in rain water has been before alluded to

The carbonate of ammonia of commerce is obtained by submitting to sublimation a mixture either of sal ammoniac or sulphate of ammonia with chalk.

This is generally carried out in cast-iron retorts, similar in size and shape to those used in the manufacture of coal gas. The retorts are charged through a door at one end, and at the other they communicate with large square leaden chambers, supported by a wooden frame, in which the sublimed salt is condensed. *Fig.* 36, p. 135.

The product of this first process is impure, being especially discoloured by the presence of carbonaceous matter, and has to be submitted to resublimation. This is carried out in iron pots surmounted by movable leaden caps. These pots are either set

37

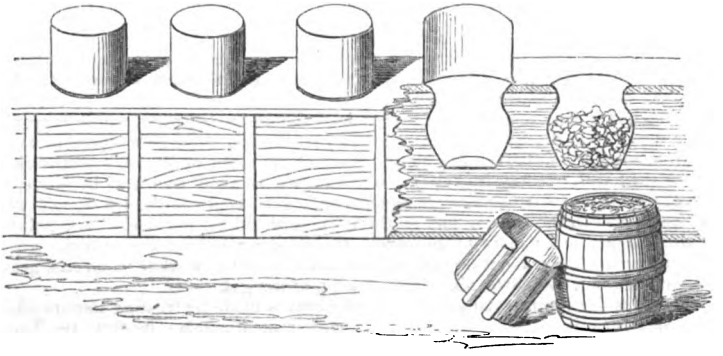

in brickwork, and heated by the flue of the retort furnace, or are placed in a water-bath, as shown in *fig.* 37. In fact, a temperature not exceeding 150° F. is found sufficient.

The charge of a retort consists usually of about 65 lbs. of sulphate of ammonia (or an equivalent quantity of the chloride) to 100 lbs. of chalk, which yield about 40 lbs of crude carbonate of ammonia.

Modifications of the Process.— Mr. Laming has suggested to bring ammonia and carbonic acid gases into mutual contact in a leaden chamber having at the lower part a layer of water, and then to crystallise the salt by evaporating this aqueous solution.

He also proposes to prepare carbonate of ammonia from the sulphide of ammonium of gas liquors, by passing carbonic acid gas into the liquor, which carbonic gas is generated by heating a mixture of oxide of copper and charcoal, in the proportion of twelve parts of the former to one of the latter.

Mr. Hill has described his mode of obtaining sesquicarbonate of ammonia from guano. To effect this, the guano is first mixed with charcoal or powdered coke: the mixture is then heated, and the sesquicarbonate of ammonia obtained by sublimation. The process does not appear to be much employed.

Manufacture of Ammonia from Peat and Shale.—Mr. Hills, in his patent of August 11th, 1846, specified the following method of obtaining ammonia from peat. The peat is placed in an upright furnace and ignited; the air passes through the bars as usual, and the ammonia is collected by passing the products of combustion through a suitable arrangement of apparatus to effect its condensation. This plan of obtaining ammonia from peat appears to be precisely similar to that patented by Mr. Rees Reece (January 23rd, 1849), and made to form an important feature in the operations of the British and Irish Peat Company. The first part of Mr. Reece's patent is for an invention for causing peat to be burned in a furnace by the aid of a blast, so as to obtain inflammable gases and tarry and other products from peat. For this purpose, a blast furnace with suitable condensing apparatus is used. The gases, on their exit from the condensing apparatus, may be collected for use as fuel or otherwise; and the tarry and other products pass into a suitable receiver. The tarry products may be employed to obtain paraffine and oils for lubricating machinery, &c.; and the other products may be made available for evolving ammonia, wood spirit, and other matters by any of the existing processes. Dr. Hodges, of Belfast, states that in his experiments he obtained nearly 22½lbs. of sulphate of ammonia from a ton of peat. Sir Robert Kane, who

Digitized by Google

was employed by Government to institute a series of experimental researches on the products obtainable from peat, states that he obtained sulphate of ammonia at the rate of $24\frac{4}{10}$ lbs. per ton of peat. Messrs. Drew and Stocken patented, in 1846, the obtaining ammonia from peat by distillation in close vessels, as practised in the carbonisation of wood. It will thus be seen that the peat is a source of ammonia, but that this source is a profitable or economical one, in a commercial point of view, is a problem in process of solution.

Ammonia from Schist.—Another source of ammonia is bituminous schist, which, when submitted to destructive distillation, gives off an ammoniacal liquor which may be employed in the manufacture of ammoniacal salts by any of the usual processes. The obtaining of ammonia from schist forms part of a patent granted to Count de Hompesch, September 4, 1841.

Chemical Composition and Constitution.—The true neutral carbonate of ammonia (NH^4O, CO^2) does not appear to exist. The sesquicarbonate of ammonia of the shops was found by Rose to have the composition assigned to it by Mr. Philips, *i. e.* it contains $2NH^3, 3CO^2, 2HO$; and it may therefore be viewed as a compound of the true bicarbonate (*i. e.* the double carbonate of ammonia and water), NH^4O, CO^2; HO, CO^2, with a peculiar compound of anhydrous carbonic acid with ammonia itself (NH^3, CO^4).

The equation representing its method of preparation will then be,

$$3NH^4O,SO^3 + 3CaO,CO^2 = (NH^4O,CO^2; HO,CO^2 + NH^3,CO^4) + NH^4O + 3CaO,SO^3$$
or $$3NH^4Cl + 3CaO,CO^2 = (NH^4O,CO^2,HO,CO^2 + NH^3,CO^2 + NH^4O) + 3CaCl,$$

for it is invariably found that a certain quantity of water and ammonia are liberated during the distillation, and hence the anomalous character of the compound. In fact, in operating upon 3 equivalents of the sulphate or chloride of the 3 equivalents of the true carbonate of ammonia (NH^4O, CO^2) which may be supposed to be generated, two are decomposed, one losing an equivalent of ammonia, the other an equivalent of water; of course, the ammonia thus liberated is not lost; it is passed into water to be saturated with acid, and thus again converted into sulphate or chloride.

Properties.—Sesquicarbonate of ammonia (as it is commonly called) is met with in commerce in the form of fibrous white translucent cakes, about two inches thick.

When exposed to the air the constituents of the less stable compound NH^3, CO^2 are volatilised, and a white opaque mass of the true bicarbonate remains. Hence the odour of ammonia always emitted by the commercial carbonate. Mr. Scanlan has also shown that by treatment with a small quantity of water, the carbonate is dissolved, leaving the bicarbonate. It is soluble in four times its weight of cold water, but boiling water decomposes it.

Impurities.—The commercial salt is sometimes contaminated with empyreumatic oil, which is recognised by its yielding a brownish coloured solution on treatment with water.

It may contain sulphate and chloride of ammonium. For the recognition of the presence of these acids, see SULPHURIC and HYDROCHLORIC Acids.

Sulphide and hyposulphite of ammonia are sometimes present, and likewise lead, from the chambers into which the salt has been sublimed.

Other Carbonates of Ammonia.—Besides the neutral or monocarbonate of ammonia before alluded to, the true bicarbonate ($NH^4O, CO^2; HO, CO^2$) and the sesquicarbonate of the shops, Rose has described about a dozen other definite compounds; but, for their description, we must refer to Watts' "Dictionary of Chemistry."

AMMONIACUM, GUM. Gum-resin. (*Gomme Ammoniaque*, Fr.; *Ammoniak*, Germ.) This is the inspissated juice of an umbelliferous plant (the *dorema armeniacum*), the gum-bearing heracleum, which grows in Persia, the East Indies, and Africa. In the French colony of Algiers this plant grows naturally, and it appears likely to become an object of cultivation. It comes to us either in small white tears clustered together, or in brownish lumps, containing many impurities. It possesses a peculiar smell, somewhat like that of assafœtida, and a bitterish taste. It is employed in medicine. Its only use in the arts is for forming a cement to join broken pieces of china and glass, which may be prepared as follows: Take isinglass 1 ounce, distilled water 6 ounces, boil together down to 3 ounces, and add $1\frac{1}{2}$ ounce of strong spirit of wine;—boil this mixture for a minute or two; strain it; add, while hot, first, half an ounce of milky emulsion of gum ammoniac, and then 5 drachms of an alcoholic solution of resin mastic.

AMMONIA, NITRATE OF.—This salt is not made on an extensive scale; but as it has a certain consumption for making the protoxide of nitrogen (laughing gas), a few remarks respecting it may not be out of place here.

It is obtained by saturating solution of ammonia, or the carbonate, with nitric acid, and then evaporating the solution till crystallisation takes place.

Digitized by Google

This salt crystallises in six-sided prisms, being isomorphous with nitrate of potash. Its composition is NH^4O, NO^5. It is incapable of existing without the presence of an equivalent of water, in addition to NH^3 and NO^5. If heat be applied, the salt is entirely decomposed into protoxide of nitrogen and water; thus—

$$NH^4O, NO^5 = 2NO + 4HO.$$

Besides its use in the laboratory for making protoxide of nitrogen, it is a constituent of frigorific mixtures, on account of the cold which it produces on dissolving in water.

Lastly, it is very convenient for promoting the deflagration of organic bodies, both its constituents being volatile on heating.

AMMONIA, SULPHATE OF. (NH^4O, SO^3) This salt is found native in fissures near volcanoes, under the name of *mossagnine*, associated with sal ammoniac. It also forms in ignited coal-beds—as at Bradley, in Staffordshire—with chloride of ammonium.

This salt is prepared by saturating the solution of ammonia, obtained by any of the processes before described (either from animal refuse, from coal, in the manufacture of coal-gas, from guano, or from any other source), with sulphuric acid, and then evaporating the solution till the salt crystallises out.

Frequently, instead of adding the acid to the ammoniacal liquor, the crude ammoniacal liquor is distilled in a boiler, either alone or with lime, and the evolved ammonia is passed into the sulphuric acid, contained in a large tun or in a series of Woolfe's bottles; or a modification of Coffey's still may be used with advantage, as in the case of the saturation of hydrochloric acid by ammonia.

If Coffey's still be employed, a considerable concentration of the liquor is effected during the process of saturation, which is subsequently completed generally in iron pans; but great care has to be taken not to carry the evaporation too far, to avoid decomposition of the sulphate by the organic matter invariably present, which reduces it to the state of sulphite, hyposulphite, and even to sulphide, of ammonium.

The salt obtained by this first crystallisation is much purer than the chloride produced under similar circumstances, and one or two re-crystallisations effect its purification sufficiently for all commercial purposes.

It is on account of the greater facility of purification which the sulphate affords by crystallisation than the chloride of ammonium, that the former is often produced as a preliminary stage in the manufacture of the latter compound, the purified sulphate being then converted into sal ammoniac by sublimation with common salt. The acid mother-liquor left in the first crystallisation is returned to be again treated, together with some additional acid, with a fresh quantity of ammonia.

Preparation. Modifications in details and patents. — Since it is in the production of the sulphate of ammonia that the modification of Coffey's still, called the *ammonia still*, is generally employed, it may be well to introduced here a detailed account of its arrangement.

This apparatus is an upright vessel, divided by horizontal diaphragms or partitions into a number of chambers. It is proposed to construct the vessel of wood, lined with lead, and the diaphragms of sheet iron. Each diaphragm is perforated with many small holes, so regulated, both with regard to number and size, as to afford, under some pressure, passage for the elastic vapours which ascend, during the use of the apparatus, to make their exit by a pipe opening from the upper chamber. Fitted to each diaphragm are several small valves, so weighted as to rise whenever elastic vapours accumulate under them in such quantity as to exert more than a certain amount of pressure on the diaphragm. A pipe also is attached to each diaphragm, passing from about an inch above its upper surface to near the bottom of a cup or small reservoir, fixed to the upper surface of the diaphragms next underneath. This pipe is sufficiently large to transmit freely downwards the whole of the liquid which enters for distillation at the upper part of the upright vessel and the cup or reservoir; into which the pipe dips forms, when full of liquid, a trap by which the upward passage of elastic vapours by the pipe is prevented. The vessel may rest on a close cistern, contrived to receive the descending liquid as it leaves the lowest chamber, and from this cistern it may be run off, by a valve or cock, whenever expedient. The cistern, or in its absence the lowest chamber, contains the orifice of a pipe which supplies the steam for working the apparatus. The exact number of chambers into which the upright vessel is divided is not of essential importance; but the quantity of liquid and the surface of each diaphragm being given, the distillation, within certain limits, will be more complete the greater the number of chambers used in the process. The liquid undergoing distillation in this apparatus necessarily covers the upper surface of each diaphragm to the depth of about an inch, being prevented from passing downward through the small perforations by the upward pressure of the rising steam and other elastic vapours; and, on the other hand, the steam being

Digitized by Google

prevented, by the traps, from passing upwards by the pipes, is forced to ascend by the perforations in the diaphragms; so that the liquid lying on them becomes heated, and in consequence gives off its volatile matters. When the ammoniacal liquid accumulates on one of the diaphragms to the depth of an inch, it flows over one of the short pipes into the trap below, and overflows into the next diaphragm, and so on. See DISTILLATION.

The management of the apparatus varies in some measure with the form in which it is desirable to obtain the ammonia. When the ammonia is required to leave the upper chamber in the form of gas, either pure or impure, it is necessary that the steam which ascends and the current of ammoniacal liquid which descends, should be in such relative proportions that the latter remain at or near the atmospheric temperature during its passage through some of the upper chambers, becoming progressively hotter as it descends, until it reaches the boiling temperature; in which state it passes through the lower chambers, either to make its escape, or to enter a cistern provided to receive it, and in which it may for some time be maintained at a boiling heat. On the contrary, if the ammonia, either pure or impure, be required to leave the upper chamber in combination with the vapour of water, the supply of steam entering below must bear such proportion to that of the ammoniacal liquid supplied above, that the latter may be at a boiling temperature in the upper part of the apparatus.*

The use of this apparatus has been patented in the name of Mr. W. E. Newton, Nov. 9, 1841.

Mr. Hill's process, patented Oct. 19, 1848, for concentrating ammoniacal solutions by causing them to descend through a tower of coke through which steam is ascending, is, in fact, nothing more than a rough mode of carrying out the same principle which is more effectually and elegantly performed by the modification of Coffey's still above described. The concentrated ammonia liquor is then treated with acid and evaporated in the usual way.

Mr. Wilson has patented, Dec. 7, 1850, another method of saturating the ammonia with the acid by passing the crude ammonia vapour, obtained by heating the ammoniacal liquor of the gas-works, in at the bottom of a high tower filled with coke, whilst the sulphuric acid descends in a continuous current from the top; in this manner the acid and ammonia are exposed to each other over a greatly extended surface.

Dr. Richardson (patent, Jan. 26, 1850) mixes the crude ammonia liquors with sulphate of magnesia, then evaporates the solution, and submits the double sulphate of magnesia and ammonia, which separates, to sublimation; but it would not appear that any great advantage is derived from proceeding in this way, either pecuniary or otherwise.

Mr. Laming passes sulphurous acid through the gas liquor, and finally oxidises the sulphite thus obtained to the state of sulphate, by exposure to the air. (Patent, Aug. 12, 1852.)

Michiel's mode of obtaing sulphate of ammonia, patented April 30, 1850, is as follows:—The ammoniacal liquors of the gas-works are combined with sulphate and oxide of lead, which is obtained and prepared in the following way:—Sulphuret of lead in its natural state is taken and reduced to small fragments by any convenient crushing apparatus. It is then submitted to a roasting process, in a suitably arranged reverberatory furnace of the following construction:—The furnace is formed of two shelves, or rather the bottom of the furnace and one shelf, and there is a communication from the lower to the upper. The galena or sulphuret of lead, previously ground, is then spread over the surface of the upper shelf, to a thickness of about 2 or 2¼ inches, and there it is submitted to the heat of the furnace. It remains thus for about two hours, at which time it is drawn off the upper shelf and spread over the lower shelf or bottom of the furnace, where it is exposed to a greater heat for a certain time, during which it is well stirred, for the purpose of exposing all the parts equally to the action of the heat, and at the same time the fusion of any portion of it is prevented. By this process the sulphuret of lead becomes converted partly into sulphate and partly into oxide of lead. This product of sulphate and oxide of lead is to be crushed by any ordinary means, and reduced to about the same degree of fineness as coarse sand. It is now to be combined with the ammoniacal liquors, when sulphate of ammonia and sulphuret and carbonate of lead will be produced.

The sulphate of ammonia is separated by treatment with water, and the residuary mixture of sulphide and carbonate of lead is used for the manufacture of lead compounds.

Properties.—The sulphate of ammonia obtained by either of the methods above

* Pharm. Journal, xiii. 64.

Digitized by Google

described is a colourless salt, containing, according to Mitscherlich, one equivalent of water of crystallisation. It is isomorphous with sulphate of potash.

It deliquesces by exposure to the air; 1 part dissolves in 2 parts of cold water, and 1 of boiling water. It fuses at 140° C. (284° F.), but at 280° C. (536° F.) it is decomposed, being volatilised in the form of free ammonia, sulphite, water, and nitrogen.

For the other sulphates—the sulphites and those salts which are but little used in the arts and manufactures—we refer to Watts' "Dictionary of Chemistry."

Uses.—The chief consumption of ammoniacal salts in the arts is in the form of sal ammoniac, the sulphate of ammonia being principally used as a material for the manufacture of the chloride of ammonium. It may, however, be employed directly in making ammonia-alum, or in the production of free ammonia by treatment with lime.

AMMONIUM. (NH^4) The radical supposed to exist in the various salts of ammonia. Thus NH^4O is the oxide, NH^4Cl the chloride, of ammonium. Ammonium constitutes one of the best established chemical types. See FORMULÆ, CHEMICAL.—C. G. W.

AMMONIUM, CHLORIDE OF. Commonly called SAL AMMONIAC. (*Sal ammoniac*, Fr.; *Salmiak*, Germ.) The early history of this salt is involved in much uncertainty. It would appear that the *sal ammoniacus* (ἅλς ἀμμωνιακός) of the ancients was, in fact, rock-salt. The earliest knowledge of the compound has been claimed both for the Arabians and the Egyptians; but the late Dr. Royle remarked, that "the salt must have been familiar to the Hindoos ever since they have burnt bricks, as they now do, with the manure of animals, for some may usually be found crystallised at the unburnt extremity of the kiln."

This salt is formed in the solid state by bringing in contact its two gaseous constituents, hydrochloric acid and ammonia. The gases combine with such force as to generate, not only heat, but sometimes even light. It may also be prepared by mixing the aqueous solutions of these gases, and evaporating till crystallisation takes place.

When ammoniacal gas is brought into contact with dry chlorine, a violent reaction ensues, attended by the evolution of heat and even light. The chlorine combines with the hydrogen to produce hydrochloric acid, which unites with the remainder of the ammonia, forming chloride of ammonium, the nitrogen being liberated. The same reaction takes place on passing chlorine gas into the saturated aqueous solution of ammonia.

Manufacture of Chloride of Ammonium from Camels' Dung.—In Egypt—which undoubtedly was the great seat of the manufacture of this salt from the beginning of the thirteenth to the middle of the seventeenth century, and whence all the European markets were supplied—the following is the process by which it is obtained:—

The original source was the urine and dung of the camel, which are dried by plastering them upon the walls, and burning, other fuel being very scarce in that country. A fire of this material evolves a thick smoke, charged with chloride of ammonium, part of which is condensed with the soot.

In every part of Egypt, but especially in the Delta, peasants are seen driving asses loaded with bags of that soot, on their way to the sal-ammoniac works.

Here it is extracted in the following manner:—Glass globes, coated with loam, are filled with the soot, pressed down by wooden rammers, a space of only two or three inches being left vacant, near their mouths. These globes are set in round orifices formed in the ridge of a long vault or large horizontal furnace flue. Heat is gradually applied by a fire of dry camels' dung, and it is eventually increased till the globes become obscurely red. As the chloride of ammonium is volatile at a temperature much below ignition, it rises out of the soot in vapour, and gets condensed into a cake upon the inner surface of the top of the globe. A considerable portion, however, escapes into the air; and another portion concretes in the mouth, which must be cleared from time to time by an iron rod. Towards the end, the obstruction becomes very troublesome and must be most carefully attended to and obviated, otherwise the globes would explode by the uncondensed vapours. In all cases when the subliming process approaches to a conclusion, the globes crack or split; and when they come to be removed, after the heat has subsided, they usually fall to pieces. The upper portion of the mass is separated, because to it the white salt adheres; and, on detaching the pieces of glass with a hatchet, it is ready for the market. At the bottom of each balloon a nucleus of salt remains, surrounded with fixed pulverulent matter. This is reserved, and, after being bruised, is put in along with the charge of soot in a fresh operation.

The sal ammoniac obtained by this process is dull, spongy, and of a greyish hue; but nothing better was for a long period known in commerce. Fifty years ago, it

Digitized by Google

fetched 2*s.* 6*d.* a pound; whereas now, perfectly pure sal ammoniac may be had at one-fifth of that price.

Manufacture of Sal Ammoniac from Bones and other Animal Matter.—Various animal offals develope, during their spontaneous putrefactive fermentation, or their decomposition by heat, a large quantity of free or carbonated ammonia among their volatile products. Upon this principle many sal ammoniac works have been established.—*Watts' Dictionary of Chemistry.*

The first attempts made in France to obtain sal ammoniac profitably in this manner failed. A very extensive factory of the kind, which experienced the same fate, was under the superintendence of the celebrated Baumé. It was established at Gravelle, near Charenton, and caused a loss to the shareholders in the speculation of upwards of 400,000 francs, which result closed the concern in 1787. For 10 years after that event, all the sal ammoniac consumed in France was imported from foreign countries. Since then the two works of MM. Payen and Pluvinet were mounted, and seem to have been tolerably successful. Coal soot was, prior to the introduction of the gas works, a good deal used in Great Britain for obtaining sal ammoniac.

In France, bones and other animal matters are distilled in large iron retorts for the manufacture of both animal charcoal and sal ammoniac.

"The annexed numbers show the produce of a French manufactory of ammonia and its salts, from the distillation of bones and other matters.

"The materials were—

46,754	tons	of bones of various kinds.
30	„	silk waste and old leather
11½	„	sulphuric acid.
80	„	chloride of sodium.
2¾	„	sulphate of lime.

and the produce was—

2,400	tons	of animal charcoal.
44	„	chloride of ammonium.
100	„	sulphate of soda.
4	„	liquor ammonia.
and 25	„	sulphate of ammonia."

—*Muspratt.*

These retorts are iron cylinders, two or three in diameter and six feet long. *Figs.*

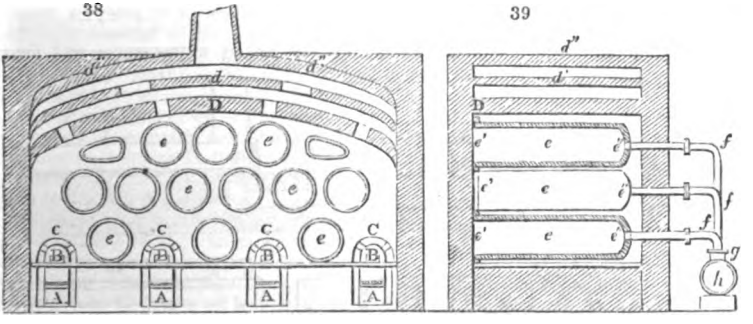

38 and 39 show the form of the furnace, and the manner in which the cylinders are arranged, the first being a longitudinal, the second a transverse section of it. A, the ashpits under the grates; B, the fire-places, arched over at top; C, the vault or bench of fire-bricks, perforated inside with eight flues for distributing the flame; D, a great arch, with a triple voissoir D, *d''*, *d'''*, under which the retorts are set. The first arch, D, is perforated with twenty vent-holes, the second with four vent-holes, through which the flame passes to the third arch, and thence to the common chimney-stalks. The retorts are shut by the door *e'* (*fig.* 39), luted, and made fast with screw-bolts. Their other ends, *e'*, terminate in tubes, *f*, *f*, *f*, which all enter the main pipe, *h*. The condensing pipe proceeds slantingly downwards from the further end of *h*, and dips into large sloping iron cylinder immersed in cold water.

The filters used in the large sal ammoniac works in France are represented in *fig.* 40. The apparatus consists—1, of a wooden chest, *a*, lined with lead, and which is turned over at the edges; a socket of lead, *b*, soldered into the lowest part of the bottom serves to discharge the liquid; 2, of a wooden crib or grating, formed of rounded rods, as shown in the section *c*, *c*, and the plan *d*; this grating is supported

Digitized by Google

one inch at least above the bottom, and set truly horizontal, by a series of wedges; 3, of an open fabric of canvas or strong calico, laid on the grating, and secured over

40

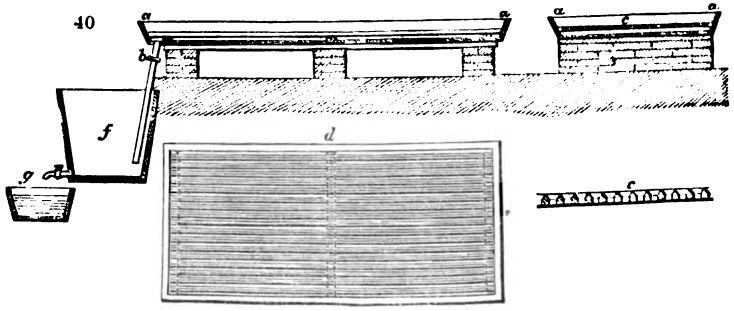

the edges so as to keep it tense. A large wooden reservoir, *f*, lined with lead, furnished with a cover, is placed under each of the filters; a pump throws back once or twice upon the filters what has already passed through. A common reservoir, *g*, below the others, may be made to communicate at pleasure with one of them by means of intermediate stopcocks.

The two boilers for evaporating and decomposing are made of lead, about one quarter of an inch thick, set upon a fire-brick vault, to protect them from the direct action of the flame. Through the whole extent of their bottoms above the vault, horizontal cast-iron plates, supported by ledges and brick compartments, compel the flame and burned air, as they issue from the arch, to take a sinuous course before they pass up the chimney. This floor of cast iron is intended to support the bottom of the boiler, and to diffuse the heat more equably. The leaden boilers are surrounded with brickwork, and supported at their edges with a wooden frame. They may be emptied at pleasure into lower receivers, called crystallisers, by means of leaden syphons and long-necked funnels.

The crystallisers are wooden chests lined with lead, 15 inches deep, 3 or 4 feet broad, and from 6 to 8 feet long, and may be inclined to one side at pleasure. A round cistern receives the drainings of the mother-waters. The pump is made of lead hardened with antimony and tin.

The subliming furnace is shown in *figs* 41 and 42, by a transverse and longi-

42 41 44

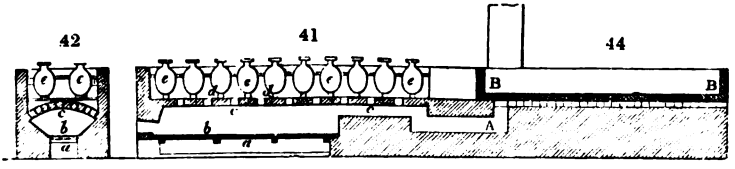

43 45

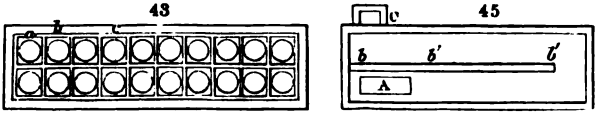

tudinal section; *a* is the ashpit; *b*, the grate and fireplace; *c*, the arch above them. This arch, destined to protect the bottles from the direct action of the fire, is perforated with vent-holes, to give a passage to the products of combustion between the subliming vessels; *d*, *d*, are bars of iron, upon which the bottom of the bottles rest; *e*, stoneware bottles, protected by a coating of loam from the flame.

Fig. 43 shows the cast-iron plates, *a*, *b*, *c*, which, placed above the vaults, receive each two bottles in a double circular opening.

At the extremity of the above furnace, a second one, called the drier, *fig.* 44, receives the products of the combustion of the first at A, under horizontal cast-iron plates, and upon which the bottom of a rather shallow boiler, B, rests. After passing twice under these plates, round a longitudinal brick partition, *b*, *b'*, *b''*, the products of combustion enter the smoke chimney, C. See plan, *fig.* 45.

The boiler set over this furnace should have no soldered joints. It may be 3½ feet

Digitized by Google

broad, 9 or 10 feet long, and 1 foot deep. The concrete sal ammoniac may be crushed under a pair of edge millstones, when it is to be sold in powder.

Bones, blood, flesh, horns, hoofs, woollen rags, silk, hair, scrapings of hides and leather, &c., may be distilled for procuring ammonia. When bones are used, the residuum in the retort is bone black. The charcoal from the other substances will serve for the manufacture of prussian blue. The bones should undergo a degree of calcination beyond what the ammoniacal process requires, in order to convert them into the best bone black; but the other animal matters should not be calcined up to that point, otherwise they are of little use in the Prussian blue works. If the bones be calcined, however, so highly as to become glazed, their decolorising power on syrups is nearly destroyed. The other substances should not be charred beyond a red-brown heat.

The condensed vapours from the cylinder retorts afford a compound liquor holding carbonate of ammonia in solution, mixed with a large quantity of empyreumatic oil, which floats at top. Lest incrustations of salt should at any time tend to obstruct the tubes, a pipe should be inserted within them and connected with a steam boiler, so as to blow steam through them occasionally.

The whole liquors mixed have usually a density of 8° or 9° Baumé (1·060). The simplest process for converting their carbonate of ammonia into the chloride of ammonium is to saturate them with hydrochloric acid, to evaporate the solution in a leaden boiler till a pellicle appears, to run it off into crystallisers, and to drain the crystals. Another process is, to decompose the carbonate of ammonia, by passing its crude liquor through a layer of sulphate of lime, 3 or four inches thick, spread upon the filters, *fig.* 40. The liquor may be laid on with a pump; it should never stand higher than 1 or 2 inches above the surface of the bruised gypsum, and it should be closely covered with boards, to prevent the dissipation of the volatile alkali in the air. When the liquor has passed through the first filter, it must be pumped up on the second; or the filters being placed in a terrace form, the liquor from the first may flow down upon the second, and thus in succession. The last filter should be formed of nearly fresh gypsum, so as to insure the thorough conversion of the carbonate into sulphate. The resulting layers of carbonate of lime should be washed with a little water, to extract the sulphate of ammonia interposed among its particles. The ammoniacal liquor thus obtained must be completely saturated, by adding the requisite quantity of sulphuric acid; even a slight excess of acid can do no harm. It is then to be evaporated, and the oil must be skimmed off in the course of the concentration. When the liquid sulphate has acquired the density of about 1·160, sea salt should be added, with constant stirring, till the whole quantity equivalent to the double decomposition is introduced into the lead boiler.

The fluid part must now be drawn off by a syphon into a somewhat deep reservoir, where the impurities are allowed to subside; it is then evaporated by boiling till the sulphate of soda falls down in granular crystals, as the result of the mutual reaction of the sulphate of ammonia and chloride of sodium; while the more soluble chloride of ammonium remains in the liquor. During this precipitation, the whole must be occasionally agitated with wooden paddles; the precipitate being in the intervals removed to the cooler portion of the pan, in order to be taken out by copper rakes and shovels, and thrown into draining-hoppers, placed near the edges of the pan. The drained sulphate of soda must be afterwards washed with cold water, to extract all the adhering sal ammoniac.

The liquor thus freed from the greater part of the sulphate, when sufficiently concentrated, is to be drawn off by a lead syphon into the crystallisers, where, at the end of 20 or 30 hours, it affords an abundant crop of crystals of sal ammoniac. The mother-water may then be run off, the crystallisers set aslope to drain the salt, and the salt itself must be washed, first by a weak solution of sal ammoniac, and lastly with water. It must be next desiccated, by the apparatus *fig.* 44, into a perfectly dry powder, then put into the subliming stoneware balloons, by means of a funnel, and well rammed down. The mouth of the bottle is to be closed with a plate or inverted pot of any kind. The fire must be nicely regulated, so as to effect the sublimation of the pure salt from the under part of the bottle, with due regularity, into a white cake in the upper part. The neck of the bottle should be cleared from time to time with a long steel skewer, to prevent the risk of choking, and consequent bursting; but in spite of every precaution, several of the bottles crack almost in every operation.— *Ure.*

The pots are of variable dimensions, but those most frequently employed are about 18 inches in height in the body, and the cups about 10 or 12 inches, with a breadth of 16 inches at the widest part.

In Scotland a process somewhat similar is pursued, the salt being sublimed in cast-iron pots lined with fire-proof tiles; the condensation being effected in globular heads of green glass, with which each of the iron pots is capped.

Digitized by Google

Manufacture of Sal Ammoniac from Gas Liquor.—By far the largest quantity of the ammoniacal salts now met with in commerce is prepared from "gas liquor," the quantity of which annually produced in the metropolis alone is quite extraordinary—*one* of the London gas works producing in one year 224,800 gallons of gas liquor, by the distillation of 51,100 tons of coal; and the total consumption of coal in London for gas making is estimated at about 840,000 tons.

The principle of the conversion of the nitrogen of coal into ammonia by destructive distillation, as in the manufacture of coal gas, will be found described in connection with the processes of gas manufacture and the products produced by the destructive distillation of coal.

In the purification of the coal gas, the bodies soluble in water are all contained in the "gas liquor" (see COAL GAS), together with a certain quantity of tarry matter. The ammonia is chiefly present in the form of carbonate, together with certain quantities of chloride, sulphide, cyanide, and sulphocyanide of ammonium, as well as the salts of the compound ammonias.

For the purpose of preparing the chloride, if hydrochloric acid be not too costly, the liquor is saturated with hydrochloric acid — the solution evaporated to cause the salt to crystallise, and then, finally, the crude sal ammoniac is purified by sublimation.

Before treatment with the acid, the liquor is frequently distilled.

This is generally effected in a wrought-iron boiler, the liquors passing into a modification of the Coffey's still, by which the solution of ammonia is obtained freer from tar and more concentrated.

The Saturation of the Ammoniacal Liquor with the acid is generally effected by allowing the acid to flow, from a large leaden vessel in which it is held, into an under-

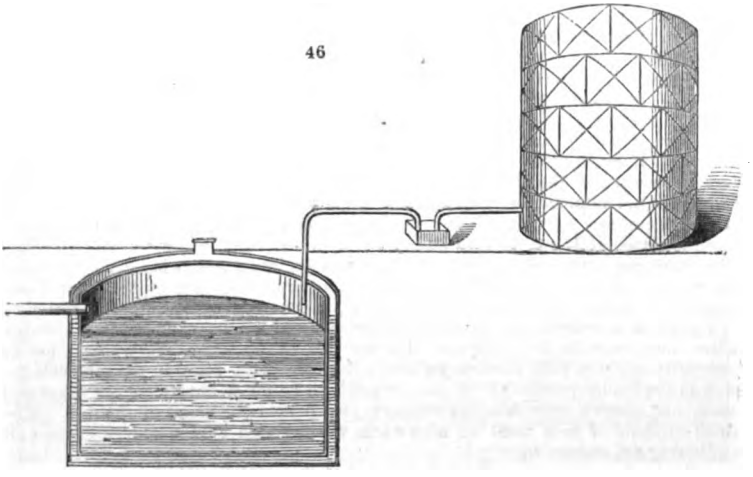

ground tank (*fig.* 46) containing the liquor, which is furnished with an exit tube passing into a chimney, to carry off the sulphuretted hydrogen and other offensive gases which are disengaged.

Or in other works the gas liquor is put into large tuns, and the acid lifted in gutta percha carboys by cranes, thrown into the liquor and stirred with it by means of an agitator; the offensive gases being in this case made to traverse the fire of the steam-engine.

Sometimes the vapours produced in the distillation of the crude gas liquor are passed in at the lower extremity of a column filled with coke, down which the acid trickles.

The *Evaporation of the crude Saline Solution* is generally performed in square or rectangular cast-iron vats, capable of holding from 800 to 1500 gallons. They are encased in brickwork, the heat being applied by a fire, the flue of which takes a sinuous course beneath the lining of brickwork on which the pan rests, as shown in *fig.* 47.

When the liquor is evaporated to a specific gravity of 1·25, it is transferred to the crystallising pans; but during the process of concentration a considerable quantity of tar separates on the surface, which must be removed, from time to time, by skimming, since it seriously impedes evaporation.

The *crystallisation*, which takes place on cooling, is performed in circular tubs,

Digitized by Google

from 7 to 8 feet wide, and 2 to 3 deep, which are generally embedded entirely or partially in the ground. To prevent the formation of large crystals, which would be

47

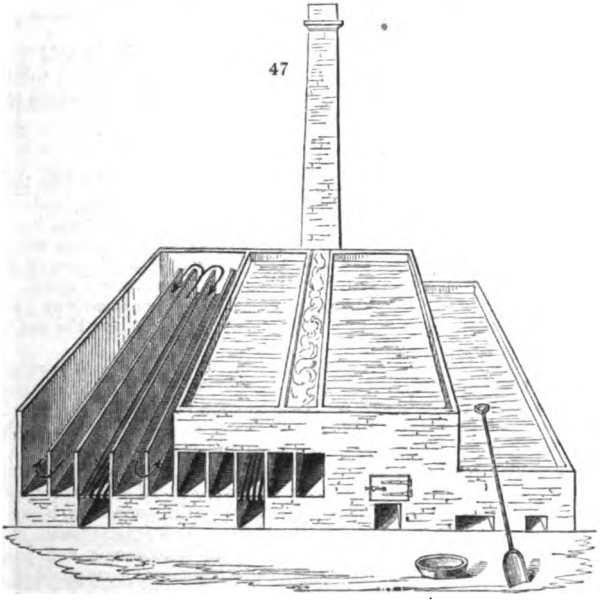

inconvenient in the subsequent process of sublimation, the liquor is agitated from time to time. The crude mass obtained, which is contaminated with tarry matter, free acid, and water, is next dried, by gently heating it on a cast-iron plate under a dome. The greyish-white mass remaining is now ready to be transferred to the sublimers.

4. The method of *sublimation* generally adopted in this country consists in beating down into the metal pots, shown in *fig.* 48, the charge of dry coarsely crystallised

48

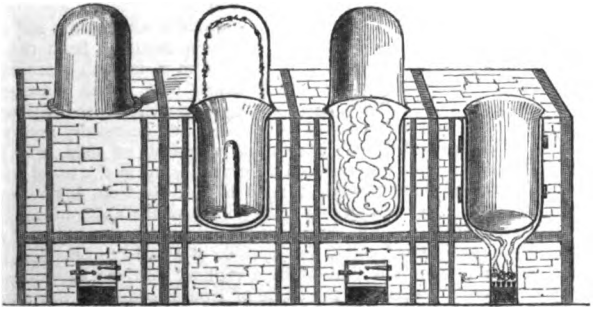

sal ammoniac. These pots are heated from below and by flues round the sides. The body of the subliming vessel is of cast iron, and the lid usually of lead, or, less frequently, iron. There is a small hole at the top, to permit the escape of steam; and great attention is requisite in the management of the heat, for if it be applied too rapidly a large quantity of sal ammoniac is carried off with the steam, or even the whole apparatus may be blown up; whilst, if the temperature be too low, the cake of sal ammoniac is apt to be soft and yellow.

The sublimation is never continued until the whole of the salt has been volatilised, since the heat required would decompose the carbonaceous impurities, and they, emitting volatile oily hydrocarbons, diminish the purity of the product. In consequence

Digitized by Google

of this incomplete sublimation, a conical mass (shown in the *fig.* 48) is left behind, called the "yolk." After cooling, the dome of the pot is taken off and the attached cake carefully removed. This cake, which is from 3 to 5 inches thick, is nearly pure, only requiring a little scraping, where it was in contact with the dome, to fit it for the market.

Modifications of the Process. — If, as is often the case, sulphuric acid is cheaper or more accessible than hydrochloric, the gas liquor is neutralised with sulphuric acid, and then the sulphate of ammonia thus obtained is sublimed with common salt (*chloride of sodium*), and thus converted into sal ammoniac.

$$NH^2O\ SO^3 + NaCl = NH^4\ Cl + NaOSO^3.$$

Mr. Croll has taked out a patent for converting crude ammonia into the chloride, by passing the vapours evolved in the first distillation through the crude chloride of manganese, obtained, as a bye product in the preparation of chlorine, for the manufacture of chloride of lime: crude chloride of iron may be used in the same way.

Mr. Laming patented in July, 1843, the substitution of a solution of chloride of calcium for treating the crude gas liquor, instead of the mineral acids. Mr. Hills, August, 1846, proposed chloride of magnesium for use in the same way; and several other patents have been taken out by both these gentlemen, for the use of various salts in this way.

Manufacture of Sal Ammoniac from Guano.— Mr. Young took out a patent, November 11th, 1841, in which he describes his method of obtaining ammonia and its salts from guano. He fills a retort, placed vertically, with a mixture of two parts by weight of guano, and one part by weight of hydrate of lime. These substances are thoroughly mixed by giving a reciprocating motion to the agitator placed in the retort; a moderate degree of heat is then applied, which is gradually increased until the bottom of the retort becomes red-hot. The ammoniacal gas thus given off is absorbed by water in a condenser, whilst other gases, which are given off at the same time, being insoluble in water, pass off. Solutions of carbonate, bicarbonate, or sesquicarbonate of ammonia are produced, by filling the condenser with a solution of ammonia, and passing carbonic acid through it. A solution of chloride of ammonium or sulphate of ammonia is obtained by filling the condenser with diluted hydrochloric or sulphuric acid, and passing the ammonia through it as it issues from the retort.

Dr. Wilton Turner obtained a patent, March 11th, 1844, for obtaining salts of ammonia from guano. The following is his method of obtaining chloride of ammonium in conjunction with cyanogen compounds:— The guano is subjected to destructive distillation in close vessels, at a low red heat during the greater part of the operation; but this temperature is increased towards the end. The products of distillation are collected in a series of Woolfe's bottles, by means of which the gases evolved during the operation may be made to pass two or three times through water, before escaping into the air. These products consist of carbonate of ammonia, hydrocyanic acid, and carburetted hydrogen, the first two of which are rapidly absorbed by the water, with the formation of a strong solution of cyanide of ammonium and carbonate of ammonia. After the ammoniacal solution has been removed from the Woolfe's apparatus, a solution of protochloride of iron is added to it, in such quantities as will yield sufficient iron to convert the latter into Prussian blue, which is formed on the addition of hydrochloric acid in sufficient quantity to neutralise the free ammonia; the precipitate thus formed is now allowed to subside, and is carefully separated from the solution, and by being boiled with a solution of potash or soda, will yield the ferrocyanide of the alkali, which is obtained by crystallising in the usual way. The solution (after the removal of the precipitate) should be freed from any excess of iron it may contain, by the careful addition of a fresh portion of the ammoniacal liquor, by which means the oxide of iron will be precipitated, and a neutral solution of ammonia obtained. When the precipitated oxide and cyanide of iron have subsided, the solution of chloride of ammonium is drawn off by a syphon, and the sal-ammoniac obtained from it by the usual processes; the oxide of iron is added to the ammoniacal solution next operated upon.

If sulphate of iron and sulphuric acid are used, sulphate of ammonia is the ammoniacal salt produced, the chemical changes and operations being similar to the above.

Since the greater part of the nitrogen present in guano exists in the state of ammoniacal salts which are decomposed at a red heat, nearly the whole of the ammonia which it is capable of yielding is obtained by this method; still there cannot be a doubt that the conversion of the urea, uric acid, and other nitrogenised organic bodies into ammonia, is greatly facilitated by mixing the guano with lime before heating it, as in Mr. Young's process.

Manufacture of Sal Ammoniac from Urine. — The urea in the urine of man and other animals is extremely liable to undergo a fermentative decomposition in the

Digitized by Google

presence of the putrefiable nitrogenous matters always present in this excrement, by which it is converted into carbonate of ammonia.

By treating stale urine with hydrochloric acid, sal ammoniac separates on evaporation.

Properties.—Chloride of ammonium (or sal ammoniac) usually occurs in commerce, in fibrous masses of the form of large hemispherical cakes with a round hole in the centre, having, in fact, the shape of the domes in which it has been sublimed. By slowly evaporating its aqueous solution, the salt may occasionally be obtained in cakes nearly an inch in height; but it generally forms feathery crystals, which are composed of rows of minute octahedra, attached by their extremities. Its specific gravity is 1·45, and by heating it sublimes without undergoing fusion. It has a sharp and acrid taste, and one part dissolves in 2·72 parts of water at 65° F., or in an equal weight of water at 212° F.

It is recognised by its being completely volatile on heating, giving a white curdy precipitate of chloride of silver on the addition of nitrate of silver to its aqueous solution, and by the copious evolution of ammonia on mixing it with lime, as well as the production of the yellow precipitate of the double chloride of ammonium and platinum ($NH^4Cl, PtCl^2$) on the addition of bichloride of platinum.

Impurities.—In the manufacture of chloride of ammonium, if the purification of the liquor be not effected before crystallising the salt, some traces of protochloride of iron are generally present, and frequently a considerable proportion. Even when the salt is sublimed, the chloride of iron is volatilised together with the chloride of ammonium, and appears to exist in the salt in the form of a double compound (probably of $FeCl, NH^4Cl$, analogous to the compound which chloride of ammonium forms with zinc and tin) 140; and this not only in the brown seams of the cake, but likewise in the colourless portion. This accounts for the observation so often made in the laboratory, that a solution of sal ammoniac, which, when recently prepared, was perfectly transparent and colourless, becomes gradually red from the peroxidation of the iron and its precipitation in the form of sesquioxide.

It is in consequence of the existence of the iron in the state of this double salt, that Wurtz found that chloride of ammonium containing iron in this form gave no indications of its presence by the usual reagents until after the addition of nitric acid; and it is curious that there likewise exists a red compound of this class in which the iron exists in the state of perchloride similarly marked, in fact as NH^4Cl, Fe^2Cl^3.

A very simple method of removing the iron, suggested by Mr. Brewer, consists in passing a few bubbles of chlorine gas through the hot concentrated solution of the salt, by which the protochloride of iron is converted into the perchloride.

$$2FeCl + Cl = Fe^2Cl^3.$$

The free ammonia always present in the solution decomposes this perchloride with precipitation of sesquioxide, and formation of an additional quantity of sal ammoniac.

$$Fe^2Cl^3 + 3NH^4O = Fe^2O^3 + 3NH^4Cl.$$

The sesquioxide of iron, which is of course present in the form of a brown hydrate, is filtered off or separated by decantation, and a perfectly pure solution is obtained.

The only precaution necessary is to avoid passing more chlorine than is requisite to peroxidise the iron, since the ammonia salt itself will be decomposed with evolution of nitrogen, and the dangerously explosive body, chloride of nitrogen, may result from the union of the liberated nitrogen with chlorine.

Uses.—The most important use of sal ammoniac in the arts is in joining iron and other metals, in tinning, &c. It is also extensively used in the manufacture of ammonia-alum, which is now largely employed in the manufacture of mordants instead of potash-alum. A considerable quantity is also consumed in pharmacy.

Sal ammoniac is one of those salts which possesses, in a high degree, the property of producing cold whilst dissolving in water; it is, therefore, a common constituent of frigorific mixtures. See FREEZING MIXTURES.

AMMONIUM, SULPHIDES OF. When sulphuretted hydrogen gas is passed into a solution of ammonia in excess, it is converted into the double sulphide of ammonium and hydrogen—or, as it is frequently called, the hydrosulphate of sulphide of ammonium—NH^4S, HS.

This solution is extensively employed as a re-agent in the chemical laboratory, for the separation of those metals the sulphides of which are soluble in acids—viz., nickel, cobalt, manganese, zinc, and iron, which are precipitated by this re-agent in alkaline solutions.

By exposure to the air, the hydrosulphuric acid which it contains is decomposed, the hydrogen being oxidised and converted into water, whilst the liberated sulphur

Digitized by Google

is dissolved by the sulphide of ammonium, forming the bisulphide, or even higher sulphide.

This solution of the polysulphide of ammonium is a valuable re-agent for dissolving the sulphides of certain metals, such as tin, antimony, and arsenic, the sulphides of which play the part of acids and form salts with the sulphide of ammonium.

By this deportment with sulphide of ammonium, these metals are separated, both on the small scale in the laboratory and also on the large scale, from the sulphides of those metals—such as lead, copper, mercury, &c.—the sulphides of which are insoluble in sulphide of ammonium.

The higher sulphides, viz., the tersulphide, $NH^4 S^3$, and the pentasulphide, $NH^4 S^5$,—are bodies of purely scientific interest. They are obtained by distilling the corresponding sulphides of potassium with sal ammoniac.

All the sulphides of ammonium are soluble in water without decomposition.

Ammonia combines with all the inorganic and organic acids, but for an account of these compound bodies we must refer to Watts' "Dictionary of Chemistry," as they have but few applications in the arts and manufactures.

AMORPHOUS. (*Privative*, ἀ, destitute of; μορφή, shape: *without shape.*) Said of mineral and other substances which occur in forms not easy to be defined. This term may be regarded as the opposite of crystalline. Some elements exist in both the crystalline and the amorphous states, as carbon, which is amorphous in charcoal, but crystalline in the diamond.

The peculiarities which give rise to these conditions—evidently depending upon molecular forces which have not yet been defined—present one of the most fertile fields for study in the range of modern science.

AMYGDALIN. ($C^{40} H^{27} NO^{22} + 6HO$.) A peculiar substance, existing ready-formed in bitter almonds, the leaves of the cherry-laurel, the kernels of the plum, cherry, peach, and the leaves and bark of *Prunus padus*, and in the young sprouts of the *P. domestica*. It is also found in the sprouts of several species of *Sorbus*, such as *S. aucuparia*, *S. torminalis*, and others of the same order. To prepare it, the bitter almonds are subjected to strong pressure between hot plates of metal. This has the effect of removing the bland oil known in commerce as almond oil. The residue, when powdered, forms almond meal. To obtain amygdalin from the meal, the latter is extracted with boiling alcohol of 90 or 95 per cent. The tincture is to be passed through a cloth and the residue pressed, to obtain the fluid mechanically adherent to it. The liquids will be milky, owing to the presence of some of the oil. On keeping the fluid for a few hours, it may be separated by pouring off, or by means of a funnel, and so obtained clear. The alcohol is now to be removed by distillation, the latter being continued until five-sixths have come over. The fluid in the retort, when cold, is to have the amygdalin precipitated from it by the addition of half its volume of ether. The crystals are to be pressed between folds of filtering paper, and recrystallised from concentrated boiling alcohol. As thus prepared, it forms pearly scales, very soluble in hot alcohol, but sparingly when cold; it is insoluble in ether, but water dissolves it readily and in large quantity. The crystals contain six atoms of water of crystallisation. Most persons engaged in chemical operations have noticed, when using almond meal for the purpose of luting, that, before being moistened with water, it has little odour, and what it has is of an oily kind; but, after moistening, it soon acquires the powerful and pleasant perfume of bitter-almond oil. This arises from a singular reaction taking place between the amygdalin and the vegetable albumen or emulsin. The latter merely acts as a ferment, and its elements in no way enter into the products formed. The decomposition, in fact, takes place between one equivalent of amygdalin and four equivalents of water; the product being one equivalent of bitter-almond oil, two equivalents of grape-sugar, and one of prussic acid. Or, represented in symbols:—

$$\underbrace{C^{40} H^{27} NO^{22}}_{\text{Amygdalin.}} + 4HO = \underbrace{C^{14} H^6 O^2}_{\text{Bitter-almond oil.}} + \underbrace{C^2 HN}_{\text{Prussic acid.}} + \underbrace{2C^{12} H^{12} O^{12}}_{\text{Grape-sugar.}}.$$

In preparing amygdalin, some chemists add water to the residue of the distillation of the tincture, and then yeast, in order to remove the sugar present, by fermentation, previous to precipitating with ether: the process thus becomes much more complex, because it is necessary to filter the fermented liquid, and concentrate it again by evaporation, before precipitating out the amygdaline.

The proof that the decomposition which is experienced by the bitter almond cake, when digested with water, is owing to the presence of the two principles mentioned, rests upon the following considerations. If the marc, or pressed residue of the bitter almond, be treated with boiling water, the emulsine — or vegetable albumen — will

Digitized by Google

become coagulated, and incapable of inducing the decomposition of the amygdalin. It is only the bitter almond which contains amygdalin; the sweet variety is, therefore, incapable of yielding the essence by fermentation. But sweet almonds resemble the bitter in containing emulsin; and it is exceedingly interesting—as illustrating the truth of the explanation given above—that if a little amygdalin be added to an emulsion of sweet almonds, the bitter-almond essence is immediately formed. A temperature of 100° is the most favourable for the digestion.—C. G. W.

AMYLAMINE. (C^{10} H^{13} N.) A volatile organic base formed on the ammonia type. It is, in fact, ammonia in which one equivalent of hydrogen is replaced by the radical amyl, C^{10} H^{11}. It may be produced artificially by several processes: 1. By boiling cyanate of amyl with potash. 2. By the action of potash on amylic urea. 3. By the action of iodide of amyl on ammonia. It is contained among the organic bases of bone oil, and is said to be obtained in a state of purity from horn and leucine by destructive distillation. It was discovered by Wurtz, to whom we are indebted for the first and second modes of preparation. The third process was discovered by Hofmann. It has been recently found that when flannel is distilled with potash, amylamine comes over with butylamine.

Amylamine, in a state of purity, is a colourless mobile fluid of an extremely burning taste. Its density is 0·750 at 64°. It boils at 203° F.—C. G. W.

AMYLENE. This hydrocarbon (C^{10} H^{10}) is produced by the dehydration of amylic alcohol by sulphuric acid; also by the dry distillation of amyl-sulphate of calcium. It is a colourless thin liquid, with a faint offensive odour. It has been tried as a substitute for chloroform without success.

AMYLUM MANDIOCÆ. Mandioca or Cassava starch.

ANALYSIS. A chemical term which is employed to signify the art of resolving a compound substance into its constituent parts. Every manufacturer should so study this art, in the proper treatises and schools of chemistry, as to enable him properly to understand and regulate his business. It is used also in Mechanics.–SeeWatts' "Dictionary of Chemistry."

ANCHOR. (*Ancre*, Fr.; *Anker*, Germ.) An iron hook, of peculiar construction and of considerable weight and strength, for enabling a ship to lay hold of the ground, and fix itself in a certain situation by means of a rope called the cable. The necessity for securing boats, canoes, or ships in a certain position, has led to the adoption of anchors, of some description, amongst every nation dwelling upon the shores of seas, lakes, or rivers. They were often of the rudest description. We are informed that the Greeks at first used stone anchors, but that they subsequently employed instruments of iron, having one two and three teeth, which were not apparently very different from those we now employ. The anchors which are used by many of the races inhabiting the shores of the Indian ocean are made of the so-called "iron-wood," which is so dense that it sinks in sea-water. The anchor is an instrument of the greatest importance to the navigator, since upon its taking and keeping hold depends his safety upon many occasions, especially near a lee shore, where he might be other-

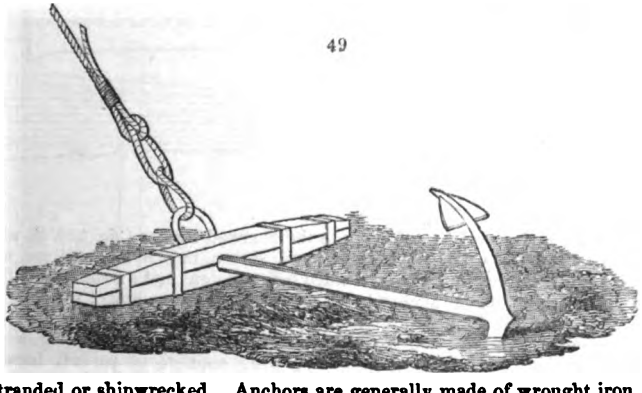

wise stranded or shipwrecked. Anchors are generally made of wrought iron, except among nations who cannot work this metal well, and who therefore use copper. The mode in which an anchor operates will be understood from inspection of *fig.* 49, where, from the direction of the strain, it is obvious that the anchor cannot move without ploughing up the ground in which its hook or fluke is sunk. When this, however, unluckily takes place, from the nature of the ground, from the mode of insertion of

Digitized by Google

the anchor, or from the violence of the winds or currents, it is called *dragging the anchor*. When the hold is good, the cable or the buried arm will sooner break than the ship will drive. Anchors are of different sizes, and have different names, according to the purposes they serve; thus there are *bower*, *stream*, and *kedge anchors*. Ships of the first class have seven anchors, and smaller vessels, such as brigs and schooners, three.

The metal employed for anchors of wrought iron is known as "scrap iron," and for the best anchors, such as Lenox's, they also use good "Welsh mine iron."

It is not practical, without occupying more space than can be afforded, to describe in detail the manufacture of an anchor. It does not, indeed, appear desirable that we should do so, since it is so special a form of mechanical industry, that few will consult this volume for the sake of learning to make anchors. The following will therefore suffice. The anchor smith's forge consists of a hearth of brickwork, raised about 9 inches above the ground, and generally about 7 feet square. In the centre of this is a cavity for containing the fire. A vertical brick wall is built on one side of the hearth, which supports the dome, and a low chimney to carry off the smoke. Behind this wall are placed the bellows, with which the fire it urged; the bellows being so placed that they blow to the centre of the fire. The anvil and the crane by which the heavy masses of metal are moved from and to the fire are adjusted near the hearth. The *Hercules*, a kind of stamping machine, or the steam hammer, need not be described in this place.

To make the anchor, bars of good iron are brought together to be faggoted; the number varying with the size of the anchor. The faggot is kept together by hoops of iron, and the whole is placed upon the properly arranged hearth, and covered up by small coals, which are thrown upon a kind of oven made of cinders. Great care and good management is required to keep this temporary oven sound during the combustion;—a smith strictly attends to this. When all is arranged, the bellows are set to work, and a blast urged on the fire; this is continued for about an hour, when a good welding heat is obtained. The mass is now brought from the fire to the anvil, and the iron welded by the hammers. One portion having been welded, the iron is returned to fire, and the operation is repeated until the whole is welded into one mass.

50

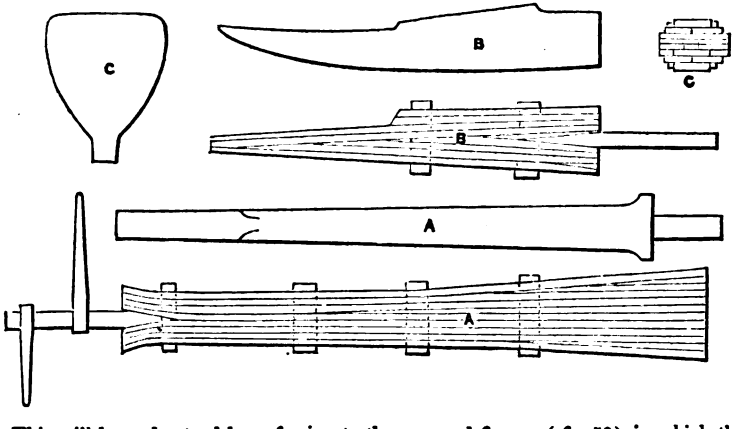

This will be understood by referring to the annexed figures (*fig.* 50), in which the bars for the shanks, A A, and the arms, B B, are shown, in plan and sections, as bound together, and their shapes after being welded before union; and C C represents the palm.

The different parts of the anchor being made, the arms are united to the end of the shank. This must be done with great care, as the goodness of the anchor depends entirely upon this process being effectively performed. The arms being welded on, the ring has to be formed and welded. The ring consists of several bars welded together, drawn out into a round rod, passed through a hole in the shank, bent into a circle, and the ends welded together. When all the parts are adjusted, the whole anchor is brought to a red heat, and hammered with lighter hammers than those used for welding, the object being to give a finish and evenness to the surface.

The toughest iron which can be procured should be used in the manufacture of an anchor, upon the strength of which both the security of valuable lives and much property depends.

Digitized by Google

The manufacture of anchors requires great knowledge of the structure of iron, and skill in the art of working it. The various parts of an anchor are thus named: — In *fig.* 51, A is the *shank*; B, the *arm* or *fluke*; C, the *palm*; D, the *blade*; E, the *square*; F, the *nut*; G, the *ring*; H, the *crown*,—the proportional weights of the several parts being as follows: —

The shank	- - -	$\frac{3}{10}$ths of the whole.
Each arm	- - -	$\frac{2}{10}$ths "
Two palms	- - -	$\frac{1}{10}$th "
Stock	- - -	$\frac{1}{5}$th "
Shackle	- - -	$\frac{1}{13}$th "

51

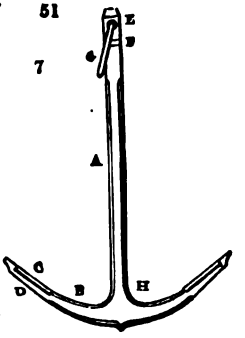

The following drawings (*fig.* 52) show an anchor on the old plan and the dissected parts of which it is composed;—

52

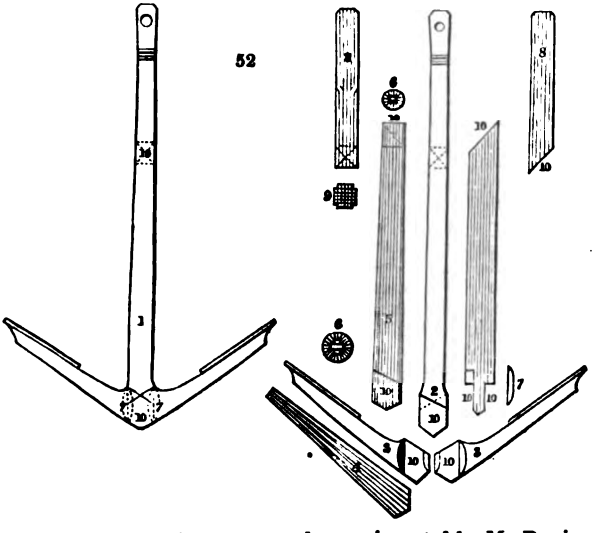

and the annexed (*fig.* 53), the patent anchor as invented by Mr. Perring, with its several parts dissected as before:—

53

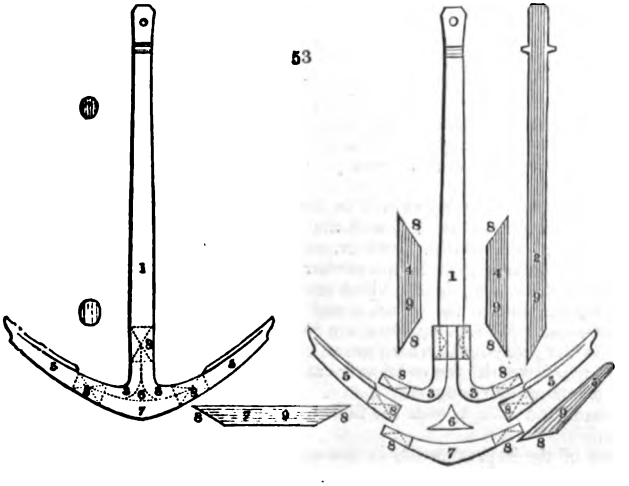

Digitized by Google

Perring's improved anchor was a very ingenious one. The bars and half the breadth of the anchor are first welded separately, and then placed side by side, when the upper half is worked into one mass, while the lower part is left disunited, but it has carrier iron bars, or *porters*, as these prolongation rods (3, 3, *fig.* 53) are commonly called, welded to the extremity of each portion. The lower part is now heated and placed in the clamping machine, which is merely an iron plate firmly bolted to a mass of timber, and bearing upon its surface four iron pins. One end of the crown is placed between the first of these pins, and passed under an iron strap; the other end is brought between the other pins, and is bent by the leverage power of the elongated rods or porters.

Thus a part of the arm being formed out of the crown gives much greater security when a true union of fibres is effected, than when the junction was made merely by a short scarf.

The angular opening upon the side opposite is filled with the *chock*, formed of short iron bars placed upright. When this has been firmly welded, the truss-piece is brought over it. This piece is made of plates similar to the above, except that their edges are here horizontal. The truss-piece is half the breadth of the arm; so that, when united to the crown, it constitutes, with the other parts, the total breadth of the arms at those places.

The shank is now shut upon the crown; the square is formed, and the nuts welded to it; the hole is punched out for the ring, and the shank is then fashioned.

The blade is made much in the way above described. In making the palm, an iron rod is first bent into the approximate form, notching it so that it may more readily take the desired shape. To one end a *porter* rod is fastened, by which the palm is carried and turned round in the fire during the progress of the fabrication. Iron plates are next laid side by side upon the rod, and the joint at the middle is broken by another plate laid over it. When the mass is worked, its under side is filled up by similar plates, and the whole is completely welded; pieces being added to the sides, if necessary, to form the angles of the palm. The blade is then shut on to the palm, after which the part of the arm attached to the blade is united to that which constitutes the crown. The smith-work of the anchor is now finished.

The junction—or shutting on, as the workmen call it—of the several members of an anchor is effected by an instrument called a Hercules, which is merely a mass of iron raised to a certain height, between parallel uprights, as in the pile-engine or vertical ram, and let fall upon the metal previously brought to a welding heat.

The end of the shank is squared to receive and hold the stock steadily and keep it from turning. To prevent it shifting along, there are two knobs or tenon-like projections. The point of the angle H, between the arms and the shank, is sometimes called the throat. The arm, B C, generally makes an angle of 56° with the shank A; it is either round or polygonal, and about half the length of the shank.

The *stock* of the anchor (*fig.* 49) is made of oak. It consists of two beams which embrace the *square*, and are firmly united by iron bolts and hoops, as shown in the figure. The stock is usually somewhat longer than the shank, has in the middle a thickness about one-twelfth of its length, but tapers at its under side to nearly one-half this thickness at the extremities.

An ingenious form of anchor was made the subject of a patent, by Lieutenant Rodger, of the Royal Navy, in 1828, and was afterwards modified by him in a second patent, obtained in August, 1829. The whole of the parts of the anchor are to be bound together by means of iron bands or hoops, in place of bolts or pins.

Fig. 54 is a side view of a complete anchor, formed upon his improved construction, and *fig.* 55 a plan of the same; *fig.* 56, an end view of the crown and flukes, or arms; *fig.* 57 represents the two principal iron plates, *a a*, of which the shank is constructed, but so as to form parts of the stump-arms to which the flukes are to be connected.

The crown piece is to be welded to the stump-piece, *c c*, *fig.* 57, as well as to the end, *l*, of the centre-piece, *h h*, and the scarfs, *m m*, are to be cut to receive the arms or flukes. Previously, however, to uniting the arms or flukes to the stump-arms, the crown and throat of the anchor are to be strengthened, by the application of the crown slabs, *n n*, *fig.* 57, which are to be welded upon each side of the crown, overlapping the end of the pillar, *h*, and the throat or knees of the stump-arms and the crown-piece. The stump-arms are then to be strengthened in a similar manner, by the thin flat pieces, *p p*, which are to be welded upon each side. The palms are united to the flukes in the usual way, and the flukes are also united to the stump-arms by means of the long scarfs, *m m*. When the shank of the anchor has been thus formed, and united with the flukes, the anchor-smith's work may be said to be complete.

Another of the improvements in the construction of anchors, claimed under this

Digitized by Google

patent, consists in a new method of affixing the stock upon the shank of the anchor, which is effected in the following manner: in *fig.* 54 the stock is shown affixed to the anchor; in *fig.* 57 it is shown detached. It may be made either of one or two pieces of timber, as shall be found most convenient. It is, however, to be observed that the stock is to be completed before fitting on to the shank. After the stock is shaped, a hole is to be made through the middle of it, to fit that part of the shank to which it is to be affixed. Two stock plates are then to be let in, one on each side of the stock, and made fast by counter-sunk nails and straps, or hoops; other straps or hoops of iron are also to be placed round the stock, as usual.

In place of nuts, formed upon the shank of the anchor, it is proposed to secure the stock by means of a hoop and a key, shown above and below J, in *fig.* 55. By this contrivance, the stock is prevented from going nearer to the crown of the anchor than it ought to do, and the key prevents its from sliding towards the shackle.

Since fitting the stock to the shank of an anchor by this method prevents the use of a ring, as in the ordinary manner, the patentee says that he in all cases substitutes a shackle for the ring, and which is all that is required for a chain cable; but when a hempen cable is to be used, he connects a ring to the usual shackle, by means of a joining shackle, as in *figs.* 54 and 55. The stock is shown in *fig.* 58.

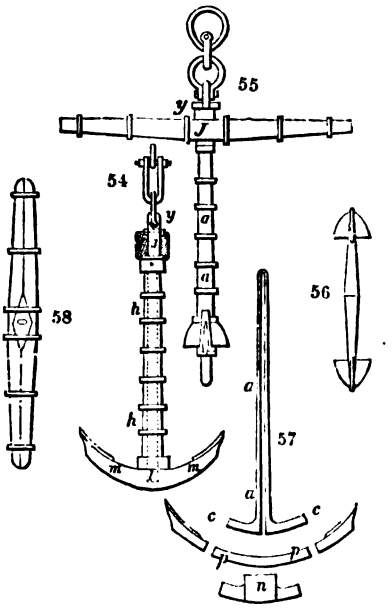

Mr. Rodger proposes, under another patent, dated July, 1833, to alter the size and form of the palms; having found from experience that anchors with small palms will not only hold better than with large ones, but that the arms of the anchor, even without any palms, have been found to take more secure hold of the ground than anchors of the old construction of similar weight and length. He has accordingly fixed upon one-fifth of the length of the arm, as a suitable proportion for the length or depth of the palm. He makes the palms, also, broader than they are long or deep.

Previously to the introduction of Lieutenant Rodger's small-palmed anchor, ships were supplied with heavy, cumbersome contrivances with long shanks and broad palms extending half-way up the flukes. So badly were they proportioned, that it was no uncommon thing for them to break in falling on the bottom, particularly if the ground was rocky. But, if once firmly imbedded in stiff holding ground, there was considerable difficulty in breaking them out. The introduction of the small palm, therefore, forms an important era in the history of anchors.

The next important introduction was Porter's anchor, with movable flukes or arms. One grand object sought to be attained here, was the prevention of fouling by the cable. It was considered, also, that as great injury was frequently occasioned by a ship grounding on her anchor, the closed upper arm would remedy the evil. It was found, however, that the anchor would not take the ground properly as at first constructed, and hence the "shark's fin" upon the outside of each fluke.

Rodger's invention was for some time viewed with distrust; but, from time to time, improvements were introduced, until the patent, which gained the Exhibition prize, was brought out. On this the jurors reported as follows:—

"Many remarkable improvements have been recently made by Lieutenant Rodger, R.N., insuring a better distribution of the metal in the direction of the greatest strains. The palm of the anchor, instead of being flat, presents two inclined planes, calculated for cutting the sand or mud instead of resisting perpendicularly; and the consequence is, that these new anchors hold much better in the ground. The committee of Lloyd's—so competent to judge of every contrivance likely to preserve ships—have resolved to allow for the anchors of the ships they insure a sixth less weight if made according to the plan of Lieutenant Rodger."

The original Porter's anchor has also undergone considerable modification; and, under the name of "Trotman's anchor," has now a conspicuous place.

Digitized by Google

Another invention is that of Mitcheson's, which, in form and proportions, strongly resembles Rodger's; but the palm is that adopted in Trotman's, or Porter's anchor. It is a trifle longer in the shank than Rodger's, and has a peculiar stock, which—although original in its form—lacks originality in its design, since Rodger had previously introduced a plan for an iron stock to obviate the weakness caused by making a hole for the stock to pass through. Mr. Lenox was the inventor of an anchor which differed somewhat from the Admiralty's anchor—a modification of Rodger's—in being shorter in the shank and thicker in the flukes, the palms being spade-shaped. Mr. J. Aylen, the Master-Attendant of Sheerness Dockyard, modified the Admiralty's anchor. Instead of the inner part of the fluke, from the crown to the pea, being rounded, as in the Admiralty plan, or squared as in Rodger's and Mitcheson's, it is hollowed. An American anchor, known as Isaac's, has a flat bar of iron from palm to palm, passing the shank elliptically on both sides; and from the end of the stock to the centre of the shank two other bars are fixed to prevent its fouling.

With the anchors thus briefly described the Admiralty ordered trials to be made at Woolwich, and at the Nore. The results of those trials—the particulars of which need not be given here—were, that Mitcheson's, Trotman's, Lenox's, and Rodger's were selected as the best.

A competent authority, writing in the *United Service Gazette*, says:—"The general opinion deduced from the series of experiments is, that although Mitcheson's has been so successful, the stock is not at present seaworthy. Trotman's has come out of the trial very successfully, but the construction is too complicated to render it a good working anchor. When once in the ground, its holding properties are very superior; in fact, a glance at its grasp will show that it has the capabilities of an anchor of another construction one-fifth larger. There are, however, drawbacks not easily to be overcome. Its taking the ground is more precarious than with other anchors; and if a ship should part her cable, it would scarcely be possible to sweep the anchor. It is also an awkward anchor to fish and to stow. Yet there are other merits which render it, upon the whole, a most valuable invention, and no ship should go to sea without one. *Of Lenox's, it is sufficient to say that it has been found equal to, and that it has gained an advantage over, Rodger's*; but so strong is the professional feeling in favour of the latter, that it will ever remain a favourite. Our recommendation would be thus:—Lenox and Rodger for bower anchors, Mitcheson for a sheet, and Trotman for a spare anchor."

The following Table gives at one view the results of the experiments made by the Admiralty upon breaking the trial anchors, and the time occupied upon each experiment:—

Anchors.	Weight.	Proof-strain.	First Crack.	Broke.	Time in Breaking.
	Cwts. qrs. lbs.	Tons.	Tons.	Tons.	Minutes.
Lieut. Rodger's - -	19 0 8	19⅞	45	73½	21
Brown and Lenox's -	20 3 14	21½	44½	47	7
Isaac's - - -	21 0 14	21½	58	63	10
Trotman's - - -	21 1 10	21⅞	51	53½	18
Honiball's - - -	20 3 7	21¼	54	75½	42
Admiralty's - -	20 2 6	21¼	40	56½	26
Aylen's - - -	21 1 0	21¾	44	47½	6

The history of the introduction of Lenox's anchors to the British navy was as follows:—

After sundry attempts to induce the Admiralty to give up entirely the use of hempen cable anchors, in consequence of their breaking when applied to chain cables, Mr. Lenox, in 1832, was permitted to alter some of the old anchors to such proportions and shape as would enable them to stand a proof-strain upon the machine in Woolwich Dockyard. It was found, as previously apprehended and asserted, that from the inequality of material in the old anchors, not above one in three was successfully altered, and Mr. Lenox was ordered to supply new anchors, which were proved, and then approved of. This state of things continued until 1838, when Mr. Lenox was requested to reconsider and complete the shape and proportions of anchors for the navy, with a view to a contract being given out for the supply of such anchors to the service. Then was constructed the shape called the "Admiralty," or "Sir William Parker's Anchor" (Sir William being then Store Lord). Mr. Lenox suggested to Sir William the doing away with every sharp edge and line in an anchor, and adopting the smooth long-oval (in the section) for the general shape of

Digitized by Google

shank and arm. This was approved of by Sir William, and he brought it out as his anchor. An entire Table of proportions was furnished; but that it might meet with no opposition from the influence of dockyard authority, it was sent to the officers of Portsmouth Yard for their approval. They returned it, after a few months, with some slight alterations in the proportions of some of the sizes, and recommended the construction to be on "Perring's principle" of the cushioned, or made-up, crown. It was so adopted, and continued to be made by Brown and Lenox for about a year or two, when the great and unnecessary expense incurred by the plan was pointed out. It was contended it was without any good; because, if the crown of the anchor, or any shut or weld, was made sound and perfect, the amalgamation of the grain of the iron would be complete, and assume its full power or strength, whatever way it might be put together; and the strongest form was that which exposed the least surface of iron to the welding heat, and consequently to injury. About the latter end of 1839, the subject was again opened. Mr. Lenox renewed his objections, by letter to Sir William Parker, to "Perring's plan" of shutting-up, and the consequence was — a contract, with specification, &c. &c., appeared, and an improved or modified plan of shutting-up (as it is called) was proposed by Mr. Tyler, master-smith of Portsmouth Yard, which was adopted; and Mr. Lenox's shape and proportions (slightly altered, as before said) came out as "Sir William Parker's," or the "Admiralty Anchor," and continued, until after the trials in 1852, with *every success in actual service that a good anchor could maintain*, and they were made and sold in quantities to all the world.

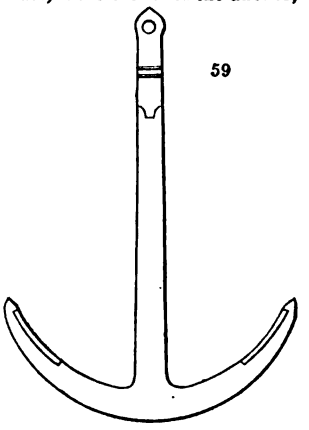

59

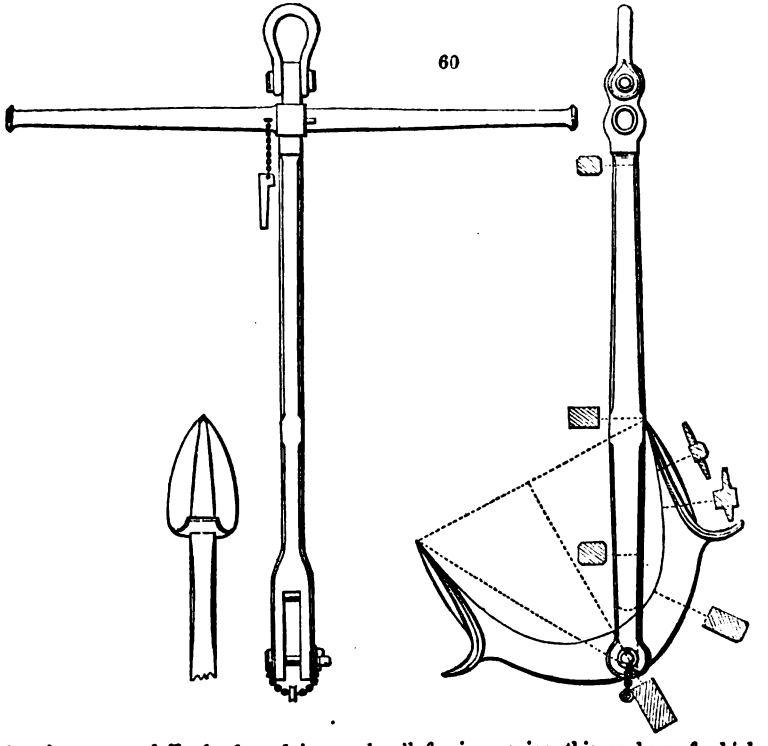

60

In the navy of England, and in nearly all foreign navies, this anchor, of which *fig.* 59 represents the form, was adopted. They are also largely employed in the mer-

Digitized by Google

chant service; but these are not so nicely proportioned as the anchors made for the Government, nor are they so highly finished. Many merchant captains, however, take Rodger's anchor, and our steamers almost invariably take Porter's or Trotman's anchor.

Trotman's Anchor is represented in *fig.* 60, under its various positions. Although for convenience Trotman's anchor is, as we have already stated, largely used by the merchant steamers, we cannot but feel that the separation of the fluke from the shaft, although it may be in many cases unobjectionable, is attended with the risk that when, in an emergency, the anchor is required, the means of connexion may be at fault.

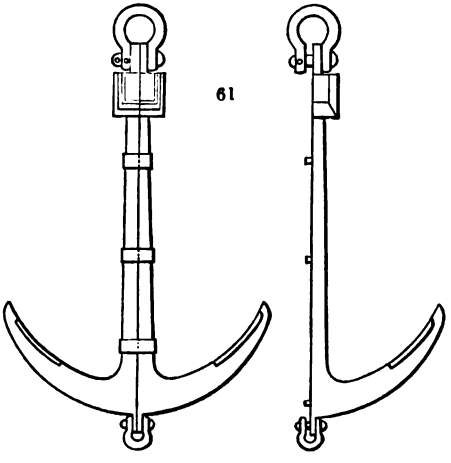

61

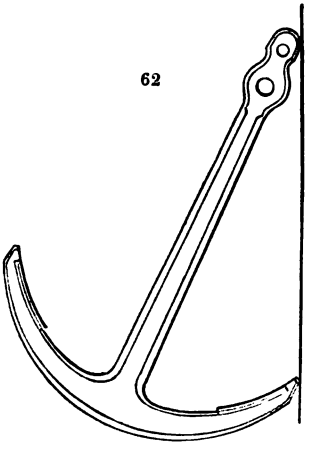

62

Captain Hall's anchor is a very valuable one, from the circumstance that it is capable of division, as shown in *fig.* 61, so that it can be taken out in boats.

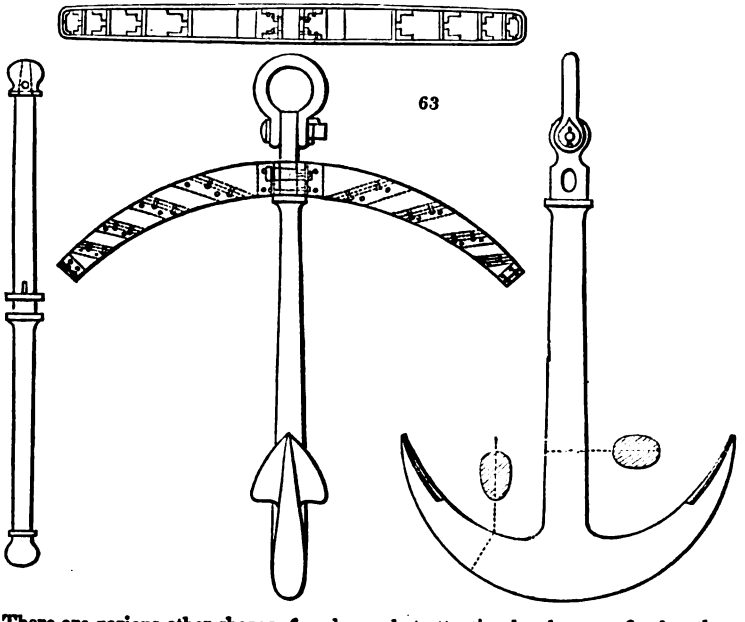

63

There are various other shapes of anchors; but attention has been confined to those generally employed.

We are not in a position to offer any opinion upon the value of the several anchors

Digitized by Google

which have been named. Having described their peculiarities, there remains but little to be said. The solidity of Lenox's anchors—as shown in *fig.* 62, and again in their more recent modifications, in plan and section, with the new form of iron stock, *fig.* 63—has recommended them strongly, and hence their general use.

The weight of anchors for different vessels is proportioned to the tonnage. The following Tables show the number of Anchors now carried, and the weights of each anchor, by the ships of the Navy under the Admiralty regulations, and by merchant vessels by the regulation of Lloyd's.

ADMIRALTY REGULATIONS.

Sailing Vessels.

Name of Ship.	Tonnage.	Number.			Weight.		
		Bower.	Stream.	Kedge.	Bower.	Stream	Kedge.
	Tons.				Cwt.	Cwt.	Cwt.
Queen	3099	4	1	2	99	25	12
Camperdown	2404	4	1	2	94	23	12
Albion	3082	4	1	2	92	23	12
Vanguard	2609	4	1	2	85	21	10
Cambridge	2139	4	1	2	81	20	10
Revenge	1954	4	1	2	77	19	9
Edinburgh	1772	4	1	2	73	18	9
Southampton	1476	4	1	2	61	15	8
Endymion	1277	4	1	2	53	14	7
Stag	1218	4	1	2	50	13	6
Thalia	1082	4	1	2	47	12	6
Vestal	913	4	1	2	38	10	5
Dido	731	4	1	2	31	9	5
Volage	516	4	1	2	27	8	4
Columbine	492	4	1	2	23	7	4
Cygnet	350	4	1	2	18	6	3
Nautilus	233	4	1	2	13	5	3
Small brigs	...	3	1	1	11	4	2
Cutters	...	2	1	1	9	3	2

Steam Frigates.

Name of Ship.	Tonnage.	Number.			Weight.		
		Bower.	Stream.	Kedge.	Bower.	Stream.	Kedge.
	Tons.				Cwt.	Cwt.	Cwt.
Terrible	1847	4	1	3	56	14	7
Retribution	1641	4	1	3	52	13	6
Penelope	1616	4	1	3	52	13	6
Avenger	1444	4	1	3	35	11	6
Sampson	1297	4	1	3	35	11	6
Cyclops	1195	4	1	3	33	10	5
Steam Sloops.							
Inflexible	1124	4	1	3	32	10	5
Virago	1059	4	1	3	30	10	5
Medea	835	3	1	3	28	9	5
Hecla	817	3	1	3	26	8	5
Ardent	801	3	1	3	23	7	4
Volcano	720	3	1	3	21	7	4
Steam Gun-Vessels.							
Sydenham	596	3	1	3	20	6	4
Spitfire	430	3	1	3	16	6	4
Porcupine	382	3	1	3	13	5	2½
Harp	345	3	1	3	11	4½	2½

Digitized by Google

For the following tables I am indebted to the kindness of the Chief Constructor of Her Majesty's Navy.

Screw Frigates, Ironclad.

Name.	Tonnage.	Number.			Weight.		
		Bower.	Stream.	Kedge.	Bower.	Stream.	Kedge.
	No.	No.	No.	No.	Cwt.	Cwt.	Cwt.
Achilles	6121	4	1	2	112	35	7 and 5
Warrior	6109	4	1	2	112	35	7 and 5
Bellerophon	4270	4	1	2	70*	35	7 and 5
Hector	4089	4	1	2	95	35	7 and 5
Lord Warden	4080	4	1	2	70*	35	7 and 5
Prince Consort	4045	4	1	2	94	24	13 and 7
Defence	3720	4	1	2	95	35	7 and 5
Pallas	2372	4	1	2	55*	20	7 and 5
Screw Corvette, Ironclad.							
Favorite	2094	4	1	2	70	20	9 and 5
Screw Sloops, Ironclad.							
Research	1253	3	1	1	38	12	7
Enterprise	993	3	1	1	30	9	5

Screw Frigates, not Ironclad.

Name.	Tonnage.	Number.			Weight.		
		Bower.	Stream.	Kedge.	Bower.	Stream.	Kedge.
	No.	No.	No.	No.	Cwt.	Cwt.	Cwt.
Mersey	3733	4	1	3	78	20	9 and 5
Emerald	2913	4	1	3	57*	24	9 and 5
Liffey	2654	4	1	2	70	18	9 and 5
Doris	2483	4	1	2	70 and 67	19	9 and 5
Impérieuse	2358	4	1	2	70	18	9 and 5
Curacoa	1571	4	1	2	54	18	8 and 4
Screw Sloops, not Ironclad.							
Niger	1072	4	1	2	48	12	7 and 3
Greyhound	880	3	1	2	33	8	5 and 3
Intrepid	862	3	1	2	23	9	5 and 3
Fawn	751	4	1	2	30	9	5 and 3
Comorant	695	3	1	2	20	6	6 each
Petrel	669	3	1	2	25	6	3 each
Cordelia	579	3	1	2	18	7	3 and 1
Syria	488	3	1	2	20	6	481
Screw Gun Vessels, not Ironclad.							
Wrangler	477	3	1	1	Two of 15 and one of 14	8	3
Espoir	428	3	1	1	14½	6	3

* Rodgers' Anchors.

Digitized by Google

Lloyd's Regulation for the Number and Weights of Anchors for Merchant Vessels.

Ship's Tonnage.	Bower.	Stream.	Kedge.	Bower, Wood Stock.	Bower, Iron Stock.	Stream.	Kedge.	Second Kedge.
Tons.				Cwt.	Cwt.	Cwt.	Cwt.	Cwt.
50	2	1	1	3	4	1 1/2		
75	2	1	1	4	5	1 3/4		
100	2	1	1	5	7	2 1/2	1 1/4	
150	2	1	1	8	10	3 1/2	1 1/4	
200	3	1	1	10	12	4 1/2	2 1/4	
250	3	1	2	13	15	5	2 1/2	
300	3	1	2	15	17	6	3	
350	3	1	2	17	20	6 1/2	3 1/4	
400	3	1	2	19	22	7 1/2	3 1/2	
500	3	1	2	23	26	9	4 1/2	
600	3	1	2	26	30	10	5	2 1/2
700	3	1	2	29	34	11	5 1/2	2 3/4
800	3	1	2	31	36	12	6	3
900	3	1	2	33	39	12	6 1/2	3 1/4
1000	3	1	2	35	41	12	6 3/4	3 1/4
1100	3	1	2	37	44	12	7	3 1/2
1200	3	1	2	39	46	12	7 1/4	3 3/4
1400	3	1	2	41	48	12	7 1/2	4
1600	3	1	2	43	50	14	8 1/4	4
1800	3	1	2	45	52	14	8 1/2	4 1/2
2000	4	1	2	47	54	14	9	4 1/2

ANCHOVY. (*Anchois*, Fr.; *Acciughe*, It.; *Anschove*, Germ.) The *Clupea encrasicolus* of Linnæus (*Engraulis encrasicolus*), a small fish, common in the Mediterranean Sea. They are preserved as a delicacy, and used in the manufacture of anchovy sauce. The Gorgona anchovy is considered the best. They are abundant off the coasts of Cornwall and Wales, but the fishery is entirely neglected. See SARDINES.

ANDIRONS, or HAND-IRONS, also called Firedogs. Before the introduction of raised and close fireplaces these articles were in general use. Strutt, in 1775, says, "These *awndirons* are used at this day, and are called '*cob-irons*'; they stand on the hearth, where they burn wood, to lay it upon; their fronts are usually carved, with a round knob at the top; some of them are kept polished and bright: anciently many of them were embellished with a variety of ornaments."

ANEMOMETER (ἄνεμος, wind; μετρέω, to measure). An instrument or machine to measure the wind, its *direction* and *force*. Three descriptions of anemometers are now usually employed — 1, Dr. Whewell's; 2, Mr. Follett Osler's; 3, Dr. Robinson's. This is not the place to describe either of those most ingenious instruments, a full account of which will be found in the "Transactions of the British Association" and of the "Royal Irish Academy."

ANEROID BAROMETER. This instrument was invented by M. Vidi, of Paris. In its latest form it consists of a cylindrical case, about 4 or 6 inches in diameter, and 2¼ inches deep, in which lies a thin metal box, near to, and parallel with, the curved boundary of the case, its two ends being distant about half an inch from each other. From this box the air has been partially exhausted, and the pressure of the external atmosphere on it causes it to alter its form. The accompanying figure (64) shows a section of this box. It is made of thin corrugated plates of metal, so that its elasticity is great. By means of the tube F, the air is partially exhausted, when the box takes the form shown by the dotted lines. A small quantity of gas is introduced after exhaustion, the object of which is to compensate for the varying elasticity of the metal at different temperatures. The pressure of the air on the box in ordinary instruments is between 40 and 50 lbs., and it will be easily understood that any variation in this pressure will occasion the distances between the two plates to vary, and consequently the stalk will have a free motion in or out. This is, by an ingenious contrivance, changed from a vertical motion to a motion parallel to the face of the dial, and this is converted into a rotatory one by the application of a watch-chain to a small cylinder or drum. The original very slight

64

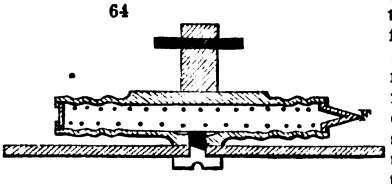

Digitized by Google

motion is augmented by the aid of levers. This is so effectually done, that when the corrugated surfaces move through only the 250th part of an inch, the index hand on the face turns over a space of three inches. The extreme portability of this little instrument, and its comparative freedom from risk of injury, renders it exceedingly useful to the traveller. Its accuracy is proved by the experiments of Professor Lloyd, who placed one under the receiver of an air-pump, and found that its indications corresponded with those of the mercurial guage to less than 0·01 of an inch; and within ordinary variations of atmospheric pressure the coincidences are very remarkable.—*Lloyd, Nichol, Drew.*

ANGELICA. (*Angélique*, Fr.; *Angelika*, Germ.) The *archangelica officinalis*. The dried angelica root is imported from Hamburg in casks. The tender stems, stalks, and the midribs of the leaves, are made, with sugar, into a sweetmeat (candied angelica). The angelica root and seeds are used by rectifiers and compounders in the preparation of gin, and as an aromatic flavouring for "bitters." The quantity cultivated in some moist places in this country is sufficient to meet our requirements.

ANGLE IRON. A piece of iron rolled out in the shape of ∠ to form joints.

ANGLESITE. A sulphate of lead found native, generally produced by the decomposition of galena (*sulphurate of lead*). It was first found at Pary's mine in Anglesea.

ANGORA WOOL. (*Poil de chevron d'Angora*, Fr.) Called also *angola* and *angona*. The wool of the Angora goat (*Capra Angorensis*), employed in the manufacture of shawls, camlets, and fine cloth, &c., is obtained from the long-haired goat of Angora, to which province this animal is peculiar. Lieutenant Conolly has given an account of this goat and some other varieties, *Capra lanigera*, the Cashmere goat, and *Changra* or the shawl-goat of Thibet:—

"The country where it is found was thus described to us—'Take Angora as a centre, then Kizzil Ermak (or Haly's) Chomgere, and from eight to ten hours' march (say thirty miles) beyond; Beybazar, and the same distance beyond, to near Nalaban; Sevree, Hissar, Yoorrook, Tosiah, Costambool, Geredeh, and Cherkesh, from the whole of which tract the common bristly goat is excluded, and the white-haired goat alone is found.' The fleece of the white Angora goat is called *tiftik* (the Turkish for goat's hair), in distinction to *yun*, or *yapak*, sheep's wool. After the goats have completed their first year, they are clipped annually, in April or May, and yield progressively, until they attain full growth, from 150 drachms to 1½ *oke* of *tiftik* (from 1 lb. to 4 lbs. English)." The hair of the tiftik goat is exported from its native districts raw, in yarn, and woven in the delicate stuffs for which Angora has been long celebrated. The last are chiefly consumed in Turkey, while the yarn and raw material are sent to France and England. It appears that the first parcels of Angora wool were shipped from Constantinople for England in 1820, and was so little appreciated that it fetched only 10*d.* the pound.

"Within the last two or three years, a new texture made of goats' wool has, however, been introduced both into France and this country, which calls for particular attention. This texture consists of stripes and checks expressly manufactured for ladies' dresses, and having a soft feel and silky appearance. The wool of which this article is made is chiefly the wool of the Angora goat. This wool reaches us through the Mediterranean, and is chiefly shipped at Smyrna and Constantinople. In colour it is the whitest known in the trade, and now more generally used in the manufacture of fine goods than any other. There are, however, other parts of Asiatic Turkey from which limited supplies are received; but in quality not so good as that produced in Angora. After the manufacture of shawls with goats' wool declined in France, this raw material remained neglected for a long while. About two or three years ago (1852), however, the French made another attempt, and brought out a texture for ladies' dresses in checks and stripes, which they call '*poil de chevre*.' The warp is a fine spun silk, coloured, and the weft Angora or Syrian white wool, which was thus thrown on the surface. This article has a soft feel, and looks pretty, but in wearing is apt to cut. The price of a dress of French manufacture has been from 2*l.* 10*s.* to 3*l.*; but by adopting a cotton warp, the same article is now made in England and sold for 15*s.*; and it is found that the cotton warp, as a mixture, suits the goats' hair best."—*Southey on Colonial Sheep and Wools*, London, 1852.

The principal manufactures of "*poil de chevre*" in France are at Paris, Cronyen, Thelle (Oise), Ecrus (Oise), Montataire (Oise), and Ledau. In England, the wool is chiefly spun at Bradford, and partly manufactured there; at Norwich, and also in Scotland; part of the yarn is exported. Mr. Southey informs us, that the quantity of goats' wool imported into the United Kingdom in 1848, was 896,865 lbs.; in 1849 the quantity rose to 2,536,039 lbs. The following returns show the progress of this industry. The total importation of goat's hair and wool was as follows:—

	1846.	1847.	1848.	1849.	1850.
Goat's wool, bales -	5,231	7,023	5,468	13,254	12,884

Digitized by Google

In 1850 we imported from Turkey 2,574,724 lbs., the computed real value of which was 278,928*l.* In 1863 our total importation of goat's hair and wool was 3,434,705lbs., which at the average price fixed for the value, 2*s.* 10⅝*d.* per lb., gave the computed real value as 502,728*l.* Of this quantity we imported 2,128,633 lbs. from Turkey, and 899,972 lbs. from France. Angora goat's wool is used for the manufacture of plush, and for coach and decorative laces. It is also used extensively for buttons, and is made up into a light cloth, for paletôts and overcoats.

In France this article is now applied to the manufacture of a new kind of lace, which in a great measure supersedes the costly fabrics of Valenciennes and Chantilly. The Angora-wool lace is more brilliant than that made from silk, and costing only half the price, it has come into very general wear among the middle classes. The same material is also manufactured into shawls, which sell from 4*l.* to 16*l.* each. See MOHAIR and CASHMERE.

ANHYDRIDES. A name now given by chemists to the oxygen-acids, or those acids which are clearly results of a combination of an element with oxygen as sulphurous acid.

ANIL. The name of the American species of the Indigo plant (*Indigofera*). It is a shrubby plant, growing from 2½ to 3 feet high. From it the name *Aniline* is derived. See ANILINE and INDIGO.

ANILEINE. See ANILINE VIOLET.

ANILINE. ($C^{12}H^7N$, or *Unitary System*, $C^6H^5, H, H=N$). This organic base having recently met with an important application in the arts, in the production of beautiful dye-colours, a description of the methods of preparing it, and of some of its characters, becomes necessary; though for details of its more interesting relations in scientific chemistry, we must refer to Watts' "Dictionary of Chemistry."

Preparation.—There are few bodies which admit of being prepared in a greater variety of ways—all of them interesting in tracing the chemical history of this most curious body; but we will only here describe that one which might be most advantageously carried out on a manufacturing scale. Probably the most abundant source of aniline is the basic oil of coal tar.

The oil is agitated with hydrochloric acid, which seizes upon the basic oils; after decanting the clear liquor, which contains the hydrochlorates of these oils, it is evaporated over an open fire until it begins to disengage acrid fumes, which indicate a commencement of decomposition, and then filtered, to separate any adhering neutral compounds. The clear liquor is then decomposed with potash or milk of lime, which liberates the bases themselves in the form of a brown oil, consisting chiefly of a mixture of aniline ($C^{12}H^7N$), and leucol or quinoleine ($C^{18}H^9N$). This mixture is submitted to distillation, and the aniline is chiefly found in that portion which passes over at or about 360° F. (182° C.): repeated rectification and collection of the product distilling at this temperature purifies the aniline; but to complete the purification, it is well to treat the partially purified aniline once more with hydrochloric acid, to separate the bases again by an alkali, and then to rectify carefully.

The violet reaction of aniline with solution of bleaching powder enables the operator to test the distillate from time to time, to ascertain when aniline ceases to pass over, since leucol does not possess this property.—*Hofmann.*

Aniline may also be obtained in quantity from indigo.

When indigo-blue (see INDIGO) is dissolved by the aid of heat in a strong solution of potash, and the mass, after evaporation to dryness, submitted to destructive distillation, it intumesces considerably, and aniline is liberated, which condenses in the receiver in the form of a brown oil, together with a little water and ammonia disengaged with it. The aniline is purified by rectification, as in the method before described. By this process, the quantity of aniline obtained is about 18 to 20 per cent. of the indigo used.—*Fritzche.*

By treatment with potash, the indigo-blue ($C^{16}H^5NO^2$) is converted into chrysanilic acid and anthranilic acid ($C^{14}H^7NO^4$), and it is this latter body which, by destructive distillation, yields carbonic acid and aniline.

$$C^{14}H^7NO^4 = C^{12}H^7N + 2CO^2.$$

Nitrobenzole (*which see*) may be converted into aniline, either by the action of sulphuretted hydrogen—

$$\underbrace{C^{12}H^5NO^4}_{\text{Nitrobenzol.}} + 6HS = \underbrace{C^{12}H^7N}_{\text{Aniline.}} + 4HO + 6S,$$

or, more conveniently, as has been recently shown by M. Béchamp, by the action of a basic acetate of iron.

For this purpose, the following proportions have been found convenient by the writer: mix in a retort ½ lb. of iron filings, with about 2 ounces of acetic acid, then add about an equal volume of nitrobenzole. After a few minutes a brisk effervescence

Digitized by Google

sets in, and the aniline distils over together with water. The reaction may require to be aided by the application of a very gentle heat; but it takes place with the greatest ease, and a very tolerably sufficient condensing arrangement should be employed. The aniline having so nearly the density of water, does not readily separate on the surface, but the addition of a few drops of ether, which dissolves in the aniline, brings it to the surface. It may then be decanted off, dried by standing for a short time over chloride of calcium, and then purified by rectification, as before described.

Properties.—Aniline is one of the organic basic derivatives of ammonia. In fact, it may be be viewed as ammonia in which one equivalent of hydrogen is replaced by the compound radical *Phenyl* ($C^{12}H^5$), thus :—

$$N\left\{\begin{matrix} C^{12}H^5 \\ H \\ H \end{matrix}\right.$$

Just as phenyl is one of a series of homologous radicals, so aniline is the first of a series of homologous bases, in which the one equivalent of hydrogen is replaced by these radicals respectively, thus :

Homologous Radicals.		Homologous Bases.
Phenyl - - -	$C^{12}H^5$ —	Aniline - - - $N\left\{\begin{matrix} C^{12}H^5 \\ H^2 \end{matrix}\right.$
Toluyl - - -	$C^{14}H^7$ —	Toluidine - - - $N\left\{\begin{matrix} C^{14}H^7 \\ H^2 \end{matrix}\right.$
Xylyl - - -	$C^{16}H^9$ —	Xylidine - - - $N\left\{\begin{matrix} C^{16}H^9 \\ H^2 \end{matrix}\right.$
Cumyl - - -	$C^{18}H^{11}$ —	Cumidine - - - $N\left\{\begin{matrix} C^{18}H^{11} \\ H^2 \end{matrix}\right.$
Cymyl - - -	$C^{20}H^{13}$ —	Cymidine - - - $N\left\{\begin{matrix} C^{20}H^{13} \\ H^2 \end{matrix}\right.$

When pure, it is a colourless liquid of a high refractive power, density 1·028, and of an aromatic odour. It is slightly soluble in water, and mixes in all proportions with alcohol and ether. It boils at 360° F. (182° C.) It dissolves sulphur and phosphorus when cold and coagulates albumen. It has no action on litmus-paper, but turns delicate vegetable colours, such as dahlia-petal infusion, blue.

Its basic characters are well developed thus :—it precipitates the oxides from the salts of iron, zinc, and alumina, just like ammonia, and yields, with bichloride of platinum, a double salt similar to ammonia, the platino-chloride of aniline ($C^{12}H^7N$,HCl,$PtCl^2$), which on ignition is entirely decomposed, leaving only a residue of platinum. These characters, together with the beautiful blue colour which it strikes with solution of bleaching powder, or the alkaline hypochlorites generally, are sufficient for the recognition and distinction of this body.

Salts of Aniline.—Aniline combines with acids forming a long series of salts which are in every respect analogous to the corresponding salts of ammonia. They are nearly all soluble and crystallisable, and are decomposed by the mineral alkalis with liberation of aniline. They are generally colourless, but become red by exposure to the air.

Sulphate of Aniline. ($C^{12}H^7N$; HO, SO^3)—This salt is employed in the manufacture of Mr. Perkin's aniline colours. It is prepared by treating aniline with dilute sulphuric acid, and evaporating gently till the salt separates. It crystallises from boiling alcohol in the form of beautiful colourless plates of a silvery lustre, for the salt is scarcely at all soluble in cold alcohol. It is very soluble in water, but insoluble in ether.

The crystals redden by exposure to the air; they can be heated to the boiling point of water without change, but when ignited they are charred with disengagement of aniline and sulphurous acid.

Oxalate of Aniline. ($C^{12}H^7N$; HO, C^2O^3)—This is one of the best defined salts of aniline: it separates as a crystalline mass on treating an alcoholic solution of oxalic acid with aniline. It is very soluble in hot water, much less so in cold, only slightly soluble in alcohol, and insoluble in ether.

A large number of other salts are known. The hydrochlorate, hydrobromate, hydriodate, nitrate, several phosphates, citrate, tartrate, &c. &c.; but they are of purely scientific interest. The same remark applies to the various products of the decomposition of aniline, which have been so ably investigated by Fritzche, Zinin, Hofmann, Gerhardt, and other chemists.

Since this was written, the Aniline dyes have received such an important development, that it is necessary to give a more detailed description of these beautiful colours.

Digitized by Google

It appears desirable that a Dictionary of the Arts should comprehend a succinct history of the discovery of a body which has performed so important a part in the advancement of a special industry as Aniline has done.

In 1826 Unverdorben, a German chemist, when exposing indigo to destructive distillation, discovered an oily substance which formed crystalline compounds with acids, to which he gave the name of *Crystalline*. Runge, also a German, subsequently observed in coal-tar oil a substance capable of forming saline compounds, and of striking a violet-blue colour with chloride of lime. To this he gave the name of *Kyanol*, blue oil. At a later period Fritzsche, when investigating the action of potash on indigo, obtained a quantity of a basic oil, which he analysed, and to which he gave the name of *Aniline*. Zinin, about the same time, found that *Nitrobenzol* (see this article), when submitted to the action of sulphuretted hydrogen, was converted into a peculiar and, as he thought, a new substance, to which he gave the name of *Benzidam* (an ammonia derived from Benzol). Hofmann was the first who submitted crystalline, kyanol, aniline, and benzidam to careful experimental comparison, and proved them to be identically the same substance, which now took its place in chemistry under the name of aniline.

In 1825 Michael Faraday, during an examination of the oily products separated in the compressed oil-gas holders—then largely used—discovered *Benzol*, which he then described as a bicarburetted hydrogen. On this important discovery, Dr. Hofmann remarks: "In this investigation, as indeed throughout the whole series of his immortal researches, Faraday's object was the elaboration of truth for its own intrinsic value and beauty; and in the same spirit has the work been continued by those who, after Faraday, engaged in the further scientific examination of this subject. Nobody in those early days of benzol, when the substance simply existed as a laboratory curiosity, dreamed of the brilliant career looming in the distance for this body, nor of the marvellous transformation it was destined to undergo. But the experience of the last few years in this matter has only corroborated the old axiom, which cannot be too often repeated, that the search after the true, for its own sake, leads on to the discovery of its natural corollaries, the useful and the beautiful. For those, indeed, lie folded up in truth, to be in due time evolved therefrom, even as the great tree unfolds itself from out the little seed."

Mitscherlich, some years later, found the benzoic acid, distilled with caustic potash, gave a colourless volatile liquid, indentical with the hydrocarbon discovered by Faraday; and hence the name this substance now retains—Benzol. Dr. Hofmann, in 1845, proved the presence of benzol in coal-tar oil, and in 1848 Mansfield showed that an inexhaustible quantity of it could be procured from that source. See BENZOL.

Now, the crude tar of the gasworks is subjected to regulated distillation. Thus is obtained separately *naphtha* or *light oil* (oily liquid lighter than water), and then *dead oil* or *heavy oil* (oily liquid heavier than water), and finally remaining in the retort pitch. From the light oil, benzol is separated by further fractional distillation. Mitscherlich showed, if this benzol is dissolved in fuming nitric acid, and the clear liquid mixed with water, a compound (nitrobenzol) is precipitated as a dense yellow liquid. This is the well-known artificial oil of bitter almonds, which is now prepared easily and economically on a large scale. See NITROBENZOL. It was Zinin, already named, who discovered that sulphuretted hydrogen converted this nitrobenzol into aniline, and who, believing the substance thus produced to be a new one, described it under the name of benzidam, or an ammonia derived from benzol.

The successive changes of benzol are thus expressed in chemical symbols. (*Hofmann*):—*Unitary System.*

First change.

Transformation of benzol into nitrobenzol.

$$\underbrace{C_6H_6}_{\text{Benzol.}} + \underbrace{HNO_3}_{\text{Nitric Acid.}} = \underbrace{C_6H_5NO_2}_{\text{Nitrobenzol.}} + \underbrace{H_2O}_{\text{Water.}}$$

Second Change.

Transformation of nitrobenzol into aniline.

$$\underbrace{C_6H_5NO_2}_{\text{Nitro-benzol.}} + \underbrace{3H_2S}_{\text{Sulphuretted Hydrogen.}} = \underbrace{C_6H_7N}_{\text{Aniline.}} + \underbrace{2H_2O}_{\text{Water.}} + \underbrace{3S}_{\text{Sulphur.}}$$

Dr. Hofmann remarks that sulphuretted hydrogen is not by any means the most convenient reducing agent to effect this conversion, and he has shown that when nitrobenzol is placed in contact with metallic zinc and hydrochloric acid, it is

Digitized by Google

rapidly converted into aniline. Béchamp submitted nitrobenzol to the action of metallic iron and acetic acid, and thus transformed it into aniline. This process is now almost universally adopted. Equal weights of nitrobenzol, acetic acid, and cast-iron turnings are very gradually mixed in cast-iron vessels, so that the heat produced by the reaction does not raise the temperature of the mixture too high. The semisolid mass which is produced consists of acetate of iron and acetate of aniline. This is distilled sometimes alone, or by some manufacturers with the addition of lime; the distillate consisting generally of acetone, aniline, unaltered nitrobenzol, and several other products arising from the impurity of the nitrobenzol. The crude aniline mixture is redistilled, and the aniline obtained sufficiently pure by collecting the products distilling between 175° C and 190° C. Thus produced, aniline is a slightly brownish liquid, a little heavier than water.

ANILINE, BLACK. This colour can scarcely be said to have been satisfactorily produced. The green tints (see ANILINE, GREEN) are turned black, according to a process devised by Messrs. Wood and Wright, by mixing chlorate of potassium with a metallic salt and a salt of aniline; for the metallic salt they prefer ferric salts. Aniline black may also be produced by treating the colour on the fabric by solutions of bichromate of potassium, or of weak bleaching powder. Nitrate of copper may be mixed with hydrochlorate of aniline, without the addition of chlorate of potassium, and the mixture printed on the fabric, when gradually a black tint is produced.

ANILINE, BLUE. MM. Girard and De Laire, in M. Pelouze's laboratory, discovered the reactions which give rise to the aniline blues. This reaction consists in heating a salt of rosaniline, or a mixture of substances capable of giving rise to its formation, for several hours with an excess of aniline. The blue colouring-matter thus obtained is the *Bleu de Paris* and the *Bleu de Lyon*. The operation on a large scale is carried out by allowing the mixture of a salt of rosaniline, with an excess of aniline, to digest at a temperature of 150° or 160° for a considerable time. If a mixture of 2 kilogrammes of dry hydrochlorate of rosaniline and 4 kilogrammes of aniline be employed, the operation is completed in four hours. The crude blue is purified, by treating it successively with boiling-water, acidulated with hydrochloric acid, and with pure water, until it presents the purest possible hue. Mr. Nicholson has devised and patented a process of purifying the blue colouring-matter, which he dissolves for this purpose in concentrated sulphuric acid, afterwards digesting the solution for half an hour at a temperature of 150° C. On adding water to this solution, the blue colouring-matter is precipitated in a modified condition, having, in fact, become soluble in pure water.

Dr. Hofmann has determined the nature of aniline blue, which he thus describes:—"The blue colouring-matters, as might have been expected, are saline compounds of a colourless base, which may be obtained in a state of perfect purity by dissolving one of the salts (the hydrochlorate, for instance) in alcohol, and filtering the solution into alcoholic ammonia. The deep-blue immediately disappears, and the slightly reddish solution yields the free base on addition of water, in the form of a white curdy precipitate, which gradually assumes an indistinctly crystalline character. Dried *in vacuo*, this substance remains colourless, or assumes a slightly bluish tint; at 100° it cakes, and becomes brown; and is found by analysis to contain—

$$C_{36}H_{33}N_3O = C_{36}H_{31}N_3,H_2O.$$

This formula exhibits an extremely simple relation between aniline blue and aniline red; indeed, aniline blue is triphenylic rosaniline:—

Aniline red $C_{20}\ H_{19}\ N_3,H_2O$ Rosaniline.

Aniline blue $C_{20}\left[\begin{matrix}H_{16}\\C_6H_5\end{matrix}\right]\ N_3,\ H_2\ O$ { Triphenylic Rosaniline.

The salts of the triphenylic derivative correspond to the rosaniline salts. The composition of the hydrochlorate, which Mr. Nicholson prepares in a state of perfect purity, is analogous to that of the monacid hydrochlorate of rosaniline:—

Hydrochlorate of rosaniline $C_{20}\ H_{19}\ N_3$, HGI.

Hydrochlorate of triphenylic rosaniline $C_{20}\left[\begin{matrix}H_{16}\\C_6H_5\end{matrix}\right]N_3$,HCl.

The genesis of aniline blue is represented by the following equation:—

$$\underbrace{G_{20}H_{19}N_3,\ HCl}_{\text{Hydrochlorate of Rosaniline.}} + 3\underbrace{\left[\begin{matrix}C_6H_5\\H_2\end{matrix}\right\}N\Big]}_{\text{Aniline.}} = C_{20}\underbrace{\left[\begin{matrix}H_{16}\\(C_6H_5)_3\end{matrix}\right]N_3,\ HCl}_{\text{Hydrochlorate of Triphenylic Rosaniline.}} + \underbrace{3H_3N.}_{\text{Ammonia.}}$$

Digitized by Google

Aniline blue, when submitted to the action of reducing agents, such as nascent hydrogen or sulphide of ammonium, is converted into a colourless difficultly crystallisable substance, which in composition corresponds to leucaniline. It contains $C_{32}H_{33}N_3$."

The recognition of the nature of aniline blue has led Dr. Hofmann to some experiments which seem likely to become of industrial importance. Seeing that the substitution of three atoms of phenyl for three atoms of hydrogen in rosaniline induces a change from red to blue, the idea naturally suggested itself to replace the hydrogen by other radicals, such as methyl, ethyl, and amyl. Experiment has furnished results of some interest. Rosaniline is readily attacked by the iodides of these radicals: a series of new substances being produced, obviously the salts of trimethyl, triethyl, and triamyl rosaniline, the blue colours of which are similar to that of the phenylated compound. These new colouring-matters are still under examination.

Under the title of "*Improvements in preparing colouring matters for Dyeing and Printing*," Dr. Hofmann patented (sealed August 29th 1863), the following processes. I take the substance now well known as "rosaniline," being the base obtained from the various salts of rosaniline found in commerce under the names of "roseine," "magenta," and also by other names, and which is usually prepared from aniline and the homologues thereof, and I mix it with the iodides, bromides, or other salts of the "alcohol radicals," such as iodide of ethyl, methyl, or amyl, or bromides of the same. I employ the substances, by preference, in the proportion of one equivalent of rosaniline to three equivalents of the salt of the alcohol radical; I then heat the mixture either alone or together with methylatic spirit to a temperature between 212° and 300° Fahrenheit in a close vessel under pressure; it is convenient to use an iron boiler provided with a safety valve. I continue the heat until the desired result is obtained. During the heating the mixture passes through several phases of coloration, being eventually converted into a blue substance. If the process is stopped before the whole is converted into the blue, the mixture is then of a violet or purple colour. For the purpose of dyeing and printing the mixture may be used in the same manner as that in which the aniline colours are employed.

ANILINE, GREEN. Aniline assumes a beautiful indigo-blue colour by the action of chlorate of potassium, to which a quantity of hydrochloric acid has been added, and also under the influence of a solution of chlorous acid. Dr. Crace Calvert and Messrs. Lowe and Clift have produced similar blues, and described them under the name of *Azurine*. Most of these blues possess the property of acquiring, under the influence of acids, a green tint called *Emeraldine*. Dr. Calvert obtains this colour directly upon cloth by printing with a mixture of an aniline salt and chlorate of potassium, and allowing it to dry. In about twelve hours the green colour is developed. This colour may be converted into blue by being passed through a hot dilute alkaline solution, or through a bath of boiling soap. See VERDINE.

ANILINE, RED. The discovery of this colour is clearly due to Dr. Hofmann. In 1858 this able chemist wrote, in the "Proceedings of the Royal Society" (vol. ix. p. 284) as follows:—"The aqueous solution yields, on addition of potassa, an oily precipitate containing a considerable portion of unchanged aniline; on boiling this precipitate with dilute potassa in a retort, the aniline distils over, whilst a viscid oil remains behind, which generally solidifies with a crystalline structure. Washing with cold alcohol, and two or three crystallisations from boiling alcohol, render this body perfectly white and pure, *a very soluble substance of a magnificent crimson colour* remaining in solution. The portion of the black mass, which is insoluble in water, dissolves almost entirely in dilute hydrochloric acid, from which it is reprecipitated by the alkalis in the form of an amorphous pink or dingy precipitate soluble in alcohol, with a *rich crimson colour*. The greater portion of this body consists of the same colouring principle, which accompanies the white crystalline substance."

This red coloration was indeed noticed in 1843 by Dr. Hofmann, while studying the action of fuming nitric acid upon aniline. In 1856 Natanson observed it when examining the action of Dutch liquid upon aniline. The industrial discovery of aniline red was made in 1859 by Messrs. Verguin and Renard Brothers, of Lyons. Their process for obtaining it was as follows:—A mixture of ten parts of aniline, and from six to seven parts of tetrachloride of tin, either anhydrous or hydrated, is heated to ebullition for fifteen or twenty minutes. The liquid first becomes yellow, and then gradually more and more red, until at last the colour is so intense that the mass appears black. The mixture is allowed to cool, and then treated with a large quantity of boiling-water, which acquires a magnificent red colour, and, without any other preparation, forms a splendid dye both for silk and wool. It is found advisable to previously purify the red colouring-matter, for which purpose its insolubility in saline solutions is made available. If the concentrated red liquid be partially saturated with carbonate of sodium, and a quantity of common salt added, the aniline

Digitized by Google

red is precipitated in a solid state, and constitutes the *fuchsine* of the chemist. This has only to be dissolved in water, alcohol, or acetic acid to prepare the dye-bath.

Renard and Frane stated, at the same time, that anhydrous, mercuric, ferric, and cupric chlorides might be used in the place of the chloride of tin.

Several other processes for obtaining aniline red were suggested, and some of them used. Gerber-Keller treated aniline with the nitrates of mercury. Lauth and Depouilly used nitric acid; and six months before the discovery by these French dyers, two English chemists—Medlock and Nicholson—had separately patented, within a few days of each other, as the result of their experiments, a similar process.

Medlock and Nicholson, and Girard and De Laire all, in 1860, patented the use of arsenic acid. This process, being now almost exclusively employed, must be described. Arsenic acid is combined with a slight excess of aniline; the crystalline mass is heated by means of a slow fire to about 120° to 140° C., care being taken not to exceed 160° C. The operation, according to the scale on which it is carried on, requires from four to nine hours for completion. A perfectly homogeneous mass, fluid above 100° C., is thus obtained, which on cooling solidifies to a hard substance, with metallic bronze-coloured lustre. When dissolved in boiling water it produces a solution of great richness and purity of colour. If, in the treatment of aniline with arsenic acid, the latter be considerably beyond the proportion of aniline employed, *violet* and *blue dyes* may be formed. The production of such has been patented by Girard and De Laire.

Laurent and Casthélaz have obtained aniline red direct from benzol, without the preliminary isolation of aniline. Nitrobenzol is treated with a mixture of iron and hydrochloric acid, or with ferric chloride. On heating the mixture, the ferric chloride reacts on the aniline contained in the mixture, transforming it into aniline red. It is doubtful if the colouring-matter obtained by this process is equal in beauty to that procured from the aniline. The name of *erythrobenzol* was given by the discoverers to the colouring-matter thus obtained, but it probably consists principally of rosaniline. "The method is ingenious, and, if the product be equal in point of quantity and quality to that obtained by means of the previously prepared aniline (a doubtful question, to say the least), it must be an economical plan, since it disposes entirely with one rather delicate operation, and thus diminishes the amount of manual labour required."—*Hofmann.*

The processes described are amongst the best yet devised for the preparation of crude aniline red. Numerous other methods have been patented, amongst others the following:—

Messrs. Renard Brothers include in their patent the ebullition of aniline with stannous, stannic, mercurious, and mercuric sulphates, with ferric and uranic nitrates and nitrate of silver, and with stannic and mercuric bromides.

Messrs. John Dale and Caro patent the action of nitrate of lead upon aniline, or hydrochlorate of aniline.

Mr. Smith claims the ebullition of aniline with perchloride of antimony, or the action of antimonic acid, peroxide of bismuth, stannic, ferric, mercuric, and cupric oxides upon hydrochlorate or sulphate of aniline at the temperature of 180°.

M. Gerber-Keller (Heilmann in England) claims the production of aniline red from all the metallic salts of the oxides of nitrogen—sulphur, chlorine, bromine, iodine, phosphorus, arsenic, and, in fact, almost every compound within the range of chemistry. It may well be said of such patents, that "scientific men cannot speak otherwise than in terms of reprehension. Their claims are founded on random guesswork, not on the results of patient investigation. They are attempts to pre-occupy the whole field, and forestall all the rewards which should be left open to real inventive genius to cultivate and win."—*Hofmann.*

These processes have reference to the preparation of crude aniline red. The crude colours contain some undecomposed aniline, mostly in the form of salts. They contain also tarry matters, some insoluble in water and dilute acids; others soluble in bisulphide of carbon, naphtha, or in caustic or carbonated alkalis. If, therefore, the crude red be boiled with an excess of alkali, the undecomposed aniline is expelled, the acid which exists in the product being fixed. On treating the residue with acidulated boiling-water, the red is dissolved, while certain tarry matters remain insoluble. If now the boiling solution be filtered, and then saturated with an alkali, the colouring-matter is precipitated in a tolerable state of purity. By redissolving the precipitated red in an acid, not employed in excess, a solution is obtained which frequently crystallises, or from which a pure red may be thrown down by a new addition of chloride of sodium, or other alkaline salt. The hydrochlorate of aniline red is employed in dyeing in France, while the acetate is used in England.

To Dr. Hofmann we are principally indebted for the investigation into the nature of aniline red. In his paper on the "Formation of Aniline Red," he says, he is

Digitized by Google

"painfully aware of the imperfections of his researches upon this subject: as yet only a corner of the veil which conceals the truth is raised. The genesis and constitution of aniline red still remain to be investigated, though the chemical nature and composition of the substance itself are no longer doubtful."

Aniline reds are salts of a very remarkable compound, which plays the part of a well-defined base, and to which Dr. Hofmann gave the name of *rosaniline*. (See ROSANILINE.) This compound, in its anhydrous state, is represented by the formula of C_{20} H_{19} N_3 (*Unitary System*). The formation of aniline red will be best given in Dr. Hofmann's own words:—

"It had been observed by many manufacturers that some varieties of commercial aniline yield much more rosaniline than others. Samples of aniline, boiling at temperatures much higher than the boiling-point of the pure compound, are found to be particularly adapted for the production of the red. This observation led Dr. Hofmann to examine carefully the deportment of *pure* aniline under the influence of the several agents by which *commercial* aniline is converted into aniline red. To this examination he subjected a sample of pure aniline derived from indigo, and other samples made from pure benzol; this being derived in some cases from benzoic acid, in other cases from coal-tar. These experiments elicited the remarkable fact, *that pure aniline, from whatever source obtained, is incapable of furnishing the red dye*—a result fully confirmed by Mr. E. C. Nicholson, who indeed had been long acquainted with this circumstance. It thus became obvious that commercial aniline must contain another base, the presence of which determines the formation of the colouring-matter. The idea very naturally suggested itself that *toluidine*—which, owing to the difficulty of separating toluol from benzol, is always present in commercial aniline—might be the true source of the colouring-matter. Experiments made with *pure* toluidine showed, however, that this base is not more capable of yielding the red than pure aniline itself. But *the red colouring-matter is instantaneously produced when a mixture of pure aniline and pure toluidine is treated with the chlorides of mercury or tin, or with arsenic acid*, plainly showing that the two bases must co-operate in the formation of the red.

This result, Dr. Hofmann believes, contains the clue by which may be explained not only the genesis of aniline red, but also that of the tinctorial ammonias generally. It points, moreover, to the necessity of ascertaining how far the formation of the violet and other colouring-matters, hitherto believed to be exclusively derived from aniline, require the co-operation of toluidine. Dr. Hofmann has experiments in hand on this and some collateral points.

Returning to the red derivatives of aniline obtained by the different processes above described, we may state broadly that all these products are composed essentially of rosaniline salts. The red, prepared by the process of Messrs. Renard and Frane, or Fuchsine, consists chiefly of hydrochlorate of rosaniline. The azalëine, or aniline red prepared by nitric acid, is principally nitrate of rosaniline.

In the crude red, produced by the action of arsenic acid, we should find the arseniate of rosaniline, which by the subsequent treatment, for the sake of purification, is converted into hydrochlorate or acetate of rosaniline.

This is the place to record the fact that for some time past a colourless (or at least slightly rose-coloured) paste, with an alkaline reaction, has been delivered into commerce from Malhouse, in France; which paste has only to be treated with acetic acid, in which it dissolves with the greatest facility, in order to obtain an extremely rich and beautiful carmine solution, capable of being at once employed for printing stuffs. Now that the characters of rosaniline are known, there cannot be the least doubt that this colourless paste consists almost entirely of rosaniline more or less pure, and that it has been prepared by precipitating a solution of a rosaniline salt (nitrate) by an excess of a powerful base, such as soda or lime.

Remarks on the Phenomena observed in the Applications of Aniline Red.—We are now, moreover, enabled to explain perfectly what takes place when a stuff which has been dyed with aniline red is acted upon by a powerful acid or alkali. On printing with a powerful acid the stuff is decolorised with the formation of a yellowish stain, because a rosaniline salt with the equivalents of acid is formed; the triacid salts of this substance being in fact all yellowish, and possessing but little colour. When the material is washed with water, the excess of acid is removed, and the monoacid salt reproduced, the red colour being restored.

On printing with a powerful base, for example, with caustic soda, the red disappears as the red rosaniline salt is decomposed, and rosaniline liberated in a colourless condition. But on washing out the soda with water, the red colour reappears, the rosaniline becoming probably carbonated.

If a powerful volatile base be employed as ammonia, the red also disappears, on account of the liberation of the colourless rosaniline; but in proportion as the ammonia evaporates the red coloration returns, particularly on slightly warming—as

Digitized by Google

the rosaniline, which is a fixed base, expels the ammonia, and re-forms the primitive salt of rosaniline with its peculiar colour. If the rosaniline-dyed fabric be left for a considerable length of time (from twelve to twenty hours) in contact with weak ammonia, the colour, as has been pointed out by Mr. W. Crum, scarcely returns on rinsing with water. This is obviously due to the increased solubility of rosaniline in water containing ammonia, which separates the colouring-matter even from the mordant.

The salts of rosaniline, which are chiefly employed for dyeing silk and wool, are the acetate, the hydrochlorate, and the nitrate, and their application is simple in the extreme. The silk is dyed by passing it through a cold aqueous solution of the salt: for the dyeing of wool the solution is heated to a temperature varying between 50° and 60° C.

The force and rapidity with which rosaniline is fixed by silk and wool is the only difficulty to be encountered in this branch of dyeing. In fact, this magnificent colour is precipitated and fixed with such avidity and promptitude by silk and wool, that it is necessary to take particular precautions, and to operate with solutions that are at first comparatively weak, and are only gradually strengthened, to prevent the dyeing being unequal, and the portions first immersed in the bath being more strongly coloured than those afterwards introduced. Cotton is also difficult to dye with rosaniline salts, but for the exactly opposite reason—that it does not present any attraction for this colouring-matter. The fixation of the colour on cotton can, therefore only be effected by first treating the cotton with some animal mordant, or with tannic acid.

There are two modes of proceeding for this purpose:—

1. The fabric is printed with the thickened organic mordant; for goods intended to be dyed throughout the mordant is uniformly spread on the whole surface of the stuff, and fixed either by drying or steaming before the fabrics are introduced into the dye-bath. The colour is only fixed on the mordanted portions, and the shades themselves may be varied according to the nature and composition of the mordant.

Among the substances employed as organic mordants for rosaniline are:—Albumin, whether made from white of egg or from blood; prepared glutin, prepared casein or actarin, gelatin, and tannin—this latter being used either in its combinations with the metallic oxides (as antimonic, stannic, or plumbic), or as tannate of gelatin. For some time oily preparations were employed, as, for example, the sulphomargaric and sulpholeic acids.

2. The mordant is thickened, and at the same time some aniline red is dissolved in it; the stuff is printed therewith, dried, and steamed; the whole is then fixed on the fabric, which then has only to be washed and dried.

This method is principally employed when using albumin, in which acetate of rosaniline is dissolved. Latterly tannin has been employed in preference for fixing aniline red, particularly in dyeing ordinary articles; for the mordanting of which albumin, although giving the most satisfactory results, is too costly an article.

It is to Mr. Perkin that we are indebted for the first application of tannin for fixing aniline colours upon cotton.

MM. Kuhlemann and Lightfoot have called attention to the advantages presented by the use of tannate of gelatin; and Mr. Walter Crum has minutely indicated the treatment by which glutin, the cheapest substitute for albumin, may be rendered available in printing and dyeing with aniline colours.

ANILINE VIOLET. To this colour in its varieties the names of *Mauve*, *Anileine*, *Indisine*, *Phenameine*, *Violine*, *Rosolane*, *Tyroline*, &c. have been given. Mr. Perkins' patent dates from 26th August 1856, and this was the original of all the numerous colorific compounds commercially produced. Aniline violet was first obtained in the crystalline condition in 1860 by M. Scheurer-Kestner, who used monohydrated acetic acid as a solvent. Dr. Hofmann informs us that in 1862 Kestner obtained "splendid well-developed prisms of perfectly pure aniline violet, which that chemist produced by operating on a very large scale." The chemical composition of this colour has not yet been established. The process of manufacture is as follows:—A cold and dilute solution of sulphate or any other salt of commercial aniline is mixed with a solution, also cold and dilute, of bichromate of potassium. The mixture is well stirred, and allowed to stand for ten or twelve hours. A black precipitate is produced, which is collected upon a filter, washed with cold water, and dried. The black matter is digested with light coal-tar oil, when a brownish-black tarry substance is dissolved from the colouring-matter obtained in the precipitate. The insoluble residue is then dried and digested with wood-spirit or alcohol, or indeed with any liquid capable of dissolving the colouring-matter. The clear solution is separated by filtration or decantation, and distilled in order to recover the alcohol or wood spirit; the residue left in the retort is Mr. Perkins' aniline violet.

The black precipitate, after having been washed with cold water, is extracted by a

Digitized by Google

prolonged ebullition with large quantities of water (sometimes acidulated with from one to two per cent. of acetic acid), an operation which effects the solution of the colouring-matter. The filtered solutions are concentrated as much as possible, and while boiling are precipitated by the addition of caustic soda. The precipitate is filtered off and washed for some time with an alkaline solution, which facilitates the extraction of the excess of bichromate of potash, and removes a reddish colouring-matter affecting the purity of the aniline violet. It is then treated with cold water until the alkali is removed, and the washings become coloured. The violet is thus obtained in the form of a paste.

The following processes have also been proposed for the production of aniline violet:—

1. Oxidation of an aniline salt by a solution of permanganate of potassium.—*Williams.*
2. Oxidation of an aniline salt by a solution of ferricyanide of potassium.—*Smith.*
3. Oxidation of a cold and dilute solution of hydrochlorate of aniline by a dilute solution of chloride of lime.—*Bolley, Beale, and Kirkman.*
4. Oxidation of a salt of aniline in an aqueous solution of peroxide of manganese.—*Kay.*
5. Oxidation of a salt of aniline by the peroxide of lead under the influence of an acid.—*Price.*
6. Oxidation of a salt of aniline by free chlorine or free hypochlorous acid.—*Smith.*
7. Oxidation of a salt of aniline by the double chloride of copper and sodium.—*Dale and Caro.*

The only processes which are employed industrially are those in which bichromate of potash, chloride of lime, and chloride of copper are used. The dyeing of silk or wool by means of aniline violet is a process of the easiest description.

Dyeing Silk.—An alcoholic solution of the violet purple is diluted with eight times its volume of hot water previously acidulated with tartaric acid. This liquid is poured into the dyeing-bath of cold water slightly acidulated. Through this the silk is passed until the required shade is attained. The tint is rendered bluish by means of indigo-carmine. Sulphuric acid added to the dye-bath causes the violet to assume a greyish shade. This may be increased until a very beautiful grey (*gris perle*) is obtained. This colour is much used by the silk-dyers of Lyons.

Dyeing Wool.—This is conducted at a temperature of 50° or 60° C., the dye-bath consisting simply of a dilute aqueous solution of colouring-matter, without any acid.

Printing upon Silk and Wool.—The paste of aniline violet is dissolved in about five times its weight of acetic acid (specific gravity, 1·060), and mixed with enough gum-water to form a printing material. The fabrics when printed are submitted to the action of steam, and then washed.

Dyeing Cotton.—Since cotton does not, like silk or wool, present any attraction for the aniline colours, the dyer employs albumin, soluble glutin, or tannin. In some cases the oxides of tin, of aluminium, of lead, or of antimony are used. Sulphuric acid has also the property of fixing the aniline violet on cotton. The animal or tannin mordants are printed on the cotton, which is steamed so as to fix it, and it is then dyed in an acidulated solution of the colour.

Violet Impérial.—This violet, which is essentially different from the mauve, is formed by modifications of the aniline reds and blues. It is produced thus:—Equal quantities of aniline and dry hydrochlorate of rosaniline are heated to a temperature of 180° C. for about four hours. MM. Girard and De Laire first patented this colour, and on account of its great beauty it is much used. It is not, however, so permanent as the mauve. Mr. E. C. Nicholson forms another violet by aniline red in a suitable apparatus to a temperature between 200° and 215° C. This mass is exhausted with acetic acid, and the deep-violet solution diluted with enough alcohol to give to the dye a convenient strength.

Aniline violet resists the action of light to a very considerable extent, although Chevreul has shown that it is inferior in this respect to either madder, cochineal, or indigo.

ANILINE YELLOW. In the preparation of aniline red there arises a great number of secondary products. Amongst others, a yellow colouring-matter has been separated by Mr. Nicholson and examined by Dr. Hofmann. The name of *Chrysaniline* has been given to this very beautiful yellow colour, which has been proved to be a well-defined base. The preparation of chrysaniline is simple. The residue from which the rosaniline has been extracted is submitted for some time to a current of steam, when a quantity of the base passes into solution. Addition of nitric acid to this solution precipitates the chrysaniline in the form of a difficultly soluble nitrate.

Hofmann has shown that chrysaniline is intimately related to rosaniline and

Digitized by Google

leucaniline, only differing from the first by two equivalents, and from the second by four equivalents of hydrogen :—

Chrysaniline $C_{20}\ H_{17}\ N_3$.
Rosaniline $C_{20}\ H_{19}\ N_3$.
Leucaniline $C_{20}\ H_{21}\ N_3$.

Chrysaniline forms two series of salts, the greater number of which are well crystallised. The most remarkable salt of chrysaniline is the nitrate, which is so insoluble in water that nitric acid may be precipitated, even from a dilute aqueous solution, by means of the more soluble hydrochlorate or acetate of chrysaniline. These, when poured into a nitric solution, rapidly give rise to the formation of an orange-red chrysaniline precipitate of nitrate of chrysaniline. This chrysaniline and its salts dye silks and wools a splendid golden-yellow colour. Such is the general character of the aniline colours. They have been used as printing-inks, which are very permanent. See Watts' (Ure's) "Dictionary of Chemistry."

ANIMÉ. A resin of a pale brown yellow colour, transparent and brittle. It exudes from a large American tree, called by Piso, *jetaiba*; and by the Indians, *courbaril*. It appears to be a species of *hymenæa*. It occurs in pieces of various sizes, and it often contains so many insects belonging to living species, as to have merited its name, as being animated. It contains about a fifth of 1 per cent. of a volatile oil, which gives it an agreeable odour. Alcohol does not dissolve the genuine animé, as I have ascertained by careful experiments, nor does caoutchoucine; but a mixture of the two, in equal parts, softens it into a tremulous jelly, though it will not produce a liquid solution. When reduced to this state, the insects can be easily picked out, without injury to their most delicate parts. On the contrary, Dr. R. D. Thomson says, animé resin is distinguished from copal by its ready solubility in alcohol; and that when digested in cold alcohol a portion remains undissolved, which may be dissolved in hot alcohol, from which it crystallises on cooling. Sir R. Kane gives $C^{10}\ H^{13}\ O$ as the composition of this gum-resin.—*Watts' Dictionary of Chemistry.*

The specific gravity of the different specimens of animé varies from 1·054 to 1·057. When exposed to heat, in a glass retort over a spirit flame, it softens, and, by careful management, it may be brought into liquid fusion without discoloration. It then exhales a white vapour of an ambrosial odour, which being condensed in water, and the liquid being tested, is found to be succinic acid.

It is extensively used by the varnish makers, who fuse it at a pretty high heat, and in this state combine it with their oils or other varnishes. It is also employed, on account of its agreeable smell when burning, in the manufacture of pastilles.

ANISEED. (*Anis*, Fr.; *Anis*, Germ.) The fruit or seed of the *pimpinella anisum*, largely cultivated in Malta, Spain, and Germany; used in the preparation of the oil of anise (*oleum anisi*), the spirit of anise (*spiritus anisi*), and anise water (*aqua anisi*). It is also used in cordials. In 1855, 963 cwts. were imported. The *oleum badiani*, or the *oil of star anise* (*illicium anisatum*), has the colour and taste of the oil of anise; but it preserves its fluidity at 35·6° F. It is sometimes fraudulently substituted for *oleum anisi.—Pereira.*

ANISIDINE. ($C^{14}\ H^9\ NO^2$) An alkaloid produced by the action of reducing agents (such as hydrosulphuric acid or protacetate of iron) on nitranisole.—C. G. W.

ANKER. A liquid measure of Amsterdam, which contains 32 gallons English. During the war, when communication with Holland was constant, and sailors and soldiers were constantly passing from one country to the other, the anker was as commonly used as a measure in our seaports as in those of Holland. The anker of brandy was frequently smuggled into this country,

ANNEALING or NEALING. (*Le recuit*, Fr.; *das Anlassen*, Germ.) A process by which glass is rendered less frangible; and metals which have become brittle, either in consequence of fusion or long-continued hammering, are again rendered malleable. When a glass vessel is allowed to cool immediately after being made, it will, if a small splinter of flint, or an angular fragment of quartz, is dropped gently into it, make it sometimes immediately, sometimes after a few minutes, fly to pieces with great violence. This extreme fragility is prevented by annealing, or placing the vessels in a hot oven, where they take several hours, or even some days, to cool.

Similar phenomena are exhibited in a higher degree by glass-tears, or Prince Rupert's drops, procured by letting drops of melted glass fall into cold water. Their form resembles that of a pear, rounded at one extremity, and tapering to a very slender tail at the other. If a part of the tail be broken off, the whole drop flies to pieces with a loud explosion; and yet the tail of a drop may be cut away by a glass-cutter's wheel, or the thick end may be struck smartly with a hammer, without the fear of sustaining any injury. When heated to redness, and permitted to cool gradually in the open air, they lose these peculiarities, and do not differ sensibly from common glass.

The peculiar brittleness of unannealed glass is, by many manufacturers, referred to

Digitized by Google

the following conditions. The exterior surface of the glass cooling quicker than the layers of glass beneath, the two portions of glass are supposed to be in different degrees of tension; as they technically express it, *a stretched skin of glass* is formed; and as the arrangement of the particles is different in this film from their disposition in those parts which have cooled more slowly, there is a constant tendency to fracture, the slightest scratch upon this "skin" disturbing the entire molecular arrangement.

If any mass of glass or of metal cools rapidly, there will be, according to the thickness of the mass, a greater or less difference between the arrangement of the constituent particles on the outer and inner sections. The process of annealing secures an equal arrangement throughout the mass.

When metals have been extended to a certain degree under the hammer, they become brittle, and incapable of being further extended without cracking. In this case the workman restores their malleability, sometimes by annealing, or, in other cases, by heating them red-hot and allowing them to cool slowly. The rationale of this process seems to be, that the hammering and extension of the metal destroys the kind of arrangement which the particles of the metal had previous to the hammering; and that the annealing, by softening the metal, enables it to recover its original structure.

Of late years a mode has been discovered of rendering cast iron malleable, without subjecting it to the action of puddling. The process is somewhat similar to that employed in annealing glass. The metal is kept imbedded in ground charcoal, or in powdered hæmatite, for several hours at a high temperature, and then allowed to cool slowly. In this manner vessels are made of cast iron which can sustain considerable violence without being broken. See IRON, MALLEABLE.

ANTHRACITE. (ἄνθραξ, coal.) A variety of coal containing a larger proportion of carbon and less bituminous matter than common coal.—*De la Beche.*

"We see the same series of coal beds becoming so altered in their horizontal range, that a set of beds *bituminous* in one locality is observed gradually to change into *anthracitic* in another. Taking the coal measures of South Wales and Monmouthshire, we have a series of accumulations in which the coal beds become not only more anthracitic towards the west, but also exhibit this change in a plane which may be considered as dipping S. S. E. at a moderate angle, the amount of which is not yet clearly ascertained, so that in the natural sections afforded we have bituminous coals in the high grounds and anthracitic coals beneath. This fact is readily observed either in the Neath or Swansea valleys, where we have bituminous coals on the south and anthracite on the north; and more bituminous coal beds on the heights than beneath, some distance up these valleys—those of the Nedd and Tawe. Though the terms bituminous coal and anthracite have been applied to marked differences, the changes are so gradual that there is no sudden modification to be seen. To some of the intermediate kinds the term 'free burning' has been given, and thus three chief differences have been recognised."—*Memoirs of the Geological Survey.*

The term *Culm* is applied both to an inferior kind of anthracite only worked for making lime, or for mixing with clay, and to the small pieces of good anthracite obtained in working the true anthracite beds. It is also called *Blind Coal, Glance Coal,* and *Kilkenny Coal.*

The term *Culm* is applied generally to anthracite in our parliamentary returns.

There are three very distinct "trades" in anthracite. There is, first, that where the coal is sold exactly as it is worked, "through and through," as it is termed, or *Through Culm,* which is used entirely for lime-burning. This coal is not of so pure a kind as that from which the large coal is picked out, and is sometimes called *Bastard Stone Coal.* The trade in the Neath district is entirely of this kind. In Swansea and Llanelly it is partly of this kind, and partly of the kind where the large coal is picked out, and sold as *Stone Coal* for the various purposes to which that coal is applied, leaving the small to be shipped, also for lime-burning purposes, under the name of *Stone Coal Culm.* In Pembrokeshire no "through culm" is shipped. There is one curious lot of 4,000 tons annually shipped in Swansea under the name of *Lambskin,* which is almost dust; it is sent to one market—Cardiganshire, where it is used entirely for mixing with clay; the mixture, under the name of *Fireballs,* being used for household purposes. This mixture, made of the ordinary *Stone Coal Culm,* is also very commonly used in parts of Pembrokeshire and Caermarthenshire.

Anthracite coal is obtained in this country at Bideford in Devonshire, at Walsall in Staffordshire, in the western divisions of the South Wales coalfield, in Ireland, and near Edinburgh. It is found abundantly in America. Professor H. D. Roger's "Transactions of American Geologists" states that in the great Apalachian coalfield, extending 720 miles, with a chief breadth of 180 miles, the coal is bituminous

Digitized by Google

towards the western limit, where it is level and unbroken, becoming anthracitic towards the south-west, where it is disturbed. Anthracitic coal is also found in the coal-fields of France, especially in the departments of Isère, the High Alps, Gard, Mayenne, and of Sarth; about 42,271,000 kilogrammes (of 2·2046 avoirdupois pounds each) are produced annually. Anthracite is also raised in Belgium.

Anthracite is not an original variety of coal, but a modification of the same beds which remain bituminous in other parts of the region. Anthracite beds, therefore, are not separate deposits in another sea, nor coal-measures in another area, nor interpolations among bituminous coals; but the bituminous beds themselves, altered into a natural coke, from which the volatile bituminous oils and gases have been driven off.—*J. P. Lesley, on Coal.*

Anthracite—now exclusively used for iron-making, steam-engines, and for domestic purposes in the United States—was some 50 years since regarded as incombustible refuse, and thrown away.

The following analyses of bituminous and anthracite coals will sufficiently show the differences:—

Locality.	Name of Coal.	Carbon.	Volatile Matter.	Ashes.
	BITUMINOUS			
Birtley Works, Newcastle-on-Tyne		60·50	35·50	4·00
Alfreton, Derbyshire		52·46	42·50	2·04
	ANTHRACITE			
Neath Abbey	Pwlferon Vein, 5th bed	91·08	8·00	0·92
Swansea	Peacock Coal	89·00	7·50	3·50
Ystalyfera	Brass Vein	92·46	6·04	1·50
Cwm Neath	Nine-feet Vein	93·12	5·22	1 50
France	Anthracite, common	79·15	7·37	13·25
„	Côte-d'or	82·60	8·60	8·80
„	Mais Saize	83·80	7·50	9·50
Pennsylvania	Beaver Meadow	92·30	6·42	1·28
„	Shenoweth Vein	94·10	1·40	4·50
„	Black Spring Gap	80·57	7·15	3·28
„	Nealey's Tunnel	89·20	5·40	5·40
Massachusetts	Mansfield Mine	97·00	- -	3·00
Rhode Island	Portsmouth Mine	85·84	10·50	3·66
Westphalia	Schafberg, Alexander Seam	82·02	8·69	9·29

Principal Localities of Anthracite and Anthracitous Coal, &c.

	Specific Gravity.	Weight of a Cubic Yard in lbs.
EUROPE.		
South Wales:—Swansea	1·263	2131
Cyfarthfa	1·337	2256
Yniscedwin	1·354	2284
Average	1·445	2278
Ireland, mean	1·445	2376
France:—Allier	1·380	2207
Tantal	1·390	2283
Brassac	1·430	2413
Belgium:—Mons	1·307	2105
Westphalia	1·305	2278
Prussian Saxony	1·466	2474
Saxony	1·300	2193
Average of Europe	-	2281
AMERICA.		
Pennsylvania:—Lykens Valley	1·327	2240
Lebanon co., grey vein	1·379	2327
Schuylkill co., Lorberry Creek	1·472	2484
Pottsville, Sharp Mountain	1·412	2382
„ Peach	1·446	2440
„ Salem Vein	1·574	2649
Tamaqua, north vein	1·600	2700
Maunch Chunk	1·550	2615
Nesquehoning	1·558	2646
Wilkesbarre, best	1·472	2884
West Mahoney	1·371	2313

Digitized by Google

	Specific Gravity.	Weight of a Cubic Yard in lbs.
Pennsylvania:—Beaver Meadow	1·600	2700
Girardville	1·600	2700
Hazelton	1·550	2615
Broad Mountain	1·700	2869
Lackawanna	1·609	2715
Massachusetts:—Mansfield	1·710	2882
Rhode Island:—Portsmouth	1·810	3054
Average in United States		2601

The calorific value of anthracite coal is well shown by the following results from Dr. Fyfe's experiments to compare Scotch and English bituminous coals with anthracite, in regard to their evaporative power, in a high-pressure boiler of a 4-horse engine having a grate with 8·15 square feet of surface; also in a waggon-shaped copper boiler, open to the air, surface 18 feet, grate 1·55.

Kind of Fuel employed.	Pounds burnt per Hour on the Grate.	Duration of the Trial in Hours.	Temperature of the Water.	Pounds of Water evaporated from the Initial Temperature by 1 lb. of Coal.	Pounds of Water at 212° from 1 lb. of Coal.	Coal per Hour on 1 Square Foot of Grate.	Time in Seconds of consuming 1 lb. of Coal.	Pounds evaporated per Hour from each Square Foot of Surface.	Remarks.
Middlerig Scotch coal.	81·33	9	45°	6·66	7·74	10·00	44·27	- -	Pressure 17 lbs. per sq. inch.
Scotch coal, different variety from preceding.	108	5	170	6·62	6·89	13·25	33·33	- -	Ditto.
ANTHRACITE - -	47·94	8½	45	8·73	10·10	5·89	75·09	- -	Ditto.
Scotch coal, from near Edinburgh.	8·24	8½	50	5·38	6·90	5·31	436·89	3·15	Low pressure, open copper boiler.
English bituminous coal.	6·07	8·4	50	7·84	9·07	3·91	503·08	3·06	Ditto.

Space will not admit of our entering fully into the question of the evaporative power of anthracite; but its advantages under certain conditions are fully established.

In this country anthracite coal is used in the manufacture of iron in the following furnaces:—

Ystalyfera in Glamorganshire	6	furnaces	in blast in 1864
Yniscedwyn in Brecknockshire	1	„	„
Bryn Amman in Caermarthenshire	1	„	„
Kilgetty in Pembrokeshire	1	„	„

The quantity of anthracite iron made in 1864 being 26,565 tons.

Anthracite Coal worked in South Wales in 1864 amounted to 509,475 tons. viz.—

Pembrokeshire	146,000 tons.
Carmarthenshire and Glamorganshire	363,475 „
	509,475 „
Anthracite shipped:	
Pembrokeshire at Saundersfoot &c.	82,000 „
Swansea	67,000 „
Briton Ferry	68,000 „
Llanelly and Pembray	130,000 „
Total shipped in 1864	347,000 „
Total quantity used at ironworks, for household purposes, and sent off by railway to be used principally for malting	162,475 „
Total	509,475 „

In the anthracite districts of South Wales the produce was, according to some local returns—in 1855, 997,500 tons; and in 1856, 965,500 tons.

There are reasons for believing that these returns were in excess of the real quantities produced, but considerable experiments were being made in those years upon the use of anthracite for melting iron.

Professor W. R. Johnson, of Pennsylvania College, informs us that fourteen furnaces using anthracite for the production of iron were in use in the United States.

The following table shows the progress of production in America of anthracite from 1840 to 1860, inclusive, from Schuylkill, Lehigh, and Wyoming:—

Digitized by Google

Year.	Tons.	Increase per Year. Tons.
1840	864,384	45,982
1841	950,973	86,589
1842	1,108,418	157,445
1843	1,263,598	155,180
1844	1,630,850	367,252
1845	2,013,013	382,163
1846	2,344,005	330,992
1847	2,882,300	538,595
1848	3,089,238	206,938
1849	3,217,641	128,403
1850	3,321,136	103,495
1851	4,329,530	1,008,394
1852	4,899,975	570,445
1853	5,097,144	197,169
1854	5,831,834	734,690
1855	6,486,097	654,263
1856	6,751,542	265,445
1857	6,431,379	320,163 decrease.
1858	6,819,881	388,502 increase.
1859	7,838,439	18,558
1860	8,500,550	662,111
1861	7,424,530	76,120 decrease.
1862	7,527,356	102,826 increase.

Since 1862 a reliable statement has not been obtainable.

The progress of the annual consumption of anthracite in the United States was thus stated in the *Science of New York Exhibition* :—

1820 - - - - - -	about	330	tons.
1825 - - - - - -	„	35,000	„
1830 - - - - - -	„	176,000	„
1835 - - - - - -	„	561,000	„
1840 - - - - - -	„	865,000	„
1845 - - - - - -	„	2,023,000	„
1850 - - - - - -	„	3,357,000	„
1853 - - - - - -	„	5,195,000	„

ANTELOPE HORN is used occasionally for ornamental knife-handles. See HORN.

ANTICHLORE. A term employed by bleachers to the means of obviating the pernicious after-effects of chlorine upon the pulp of paper, or stuffs, which have been bleached therewith. Manufacturers have been in the habit of using sulphite of soda, whose action upon the adhering bleaching salt, which cannot be removed by washing, gives rise to the formation of sulphate and hydrosulphate of soda and chloride of sodium. Chloride of tin has been recommended by some chemists for this purpose.

ANTI-GUGGLER. A small syphon of metal, which is inserted into the mouths of casks, or large bottles called carboys, to admit air over the liquor contained in them, and thus to facilitate their being emptied without agitation or a guggling noise.

ANTI-ATTRITION, or, ANTI-FRICTION COMPOSITION. Various preparations have been, from time to time, introduced for the purpose of removing, as much as possible, the friction of machinery. Black lead, or plumbago, mixed with a tenacious grease, has been much employed. Peroxide of iron, finely divided hæmatite, &c., have also been used.

A composition employed at Munich is reported to have been used with success and economy to diminish friction of machinery. It consists of ten and half parts of pure hogs' lard fused with two parts of finely pulverised and sifted plumbago. The lard is first to be melted over a moderate fire, then a handful of the plumbago thrown in, and the materials stirred with a wooden spoon until the mixture is perfect; the rest of the plumbago is then to be added, and again to be stirred until the substance is of uniform composition; the vessel is then to be removed from the fire, the motion being continued until the mixture is quite cold. The composition, in its cold state, was applied to the pivots, the teeth of wheels, &c., by a brush, and seldom more than once in 24 hours.*

* Ann. des Mines, xi. 79.

Digitized by Google

It was found that this composition replaced the oil, tallow, and tar in certain iron-works with economy, saving about four-fifths of the cost of these articles.

ANTI-FRICTION METAL. Tin and pewter are often employed as anti-friction metals for the bearings of locomotive engines. One half of each tin and copper is now used at some of the large railway works.

Babbet's metal is prepared by taking about fifty parts of tin, five of antimony, and one of copper.

Tin, or pewter, used alone, owing to its softness, spreads out and escapes under the superincumbent weight of the locomotive, or other heavy machinery. It is usual, therefore, to add antimony, for the purpose of giving these metals hardness.

Fenton's Anti-friction metal, which is much employed, is a mixture of tin, copper, and spelter. Its advantages are stated to be cheapness in first cost, low specific gravity, being 20 per cent. lighter than gun metal; and being of a more unctuous or soapy character than gun metal, less grease or oil is required.

The softer metal is often supported by brasses cast of the required form, the tin alloy being cast upon them. The brasses, or bearings, being properly tinned, and an exact model of the axle having been turned, the parts are heated, put together in their relative positions, luted with plastic clay, and the fluid anti-friction metal poured in, which then becomes of the required form, and effectually solders the brass.

The following compositions are recommended to railway engineers as having been employed for several years in Belgium. In those cases where the objects are much exposed to friction, 20 parts of copper, 4 of tin, 0·5 of antimony, and 0·25 of lead. For objects which are intended to resist violent shocks, 20 parts of copper, 6 of zinc, and 1 of tin. For those which are exposed to heat, 17 parts of copper, 1 of zinc, 0·5 of tin, and 0·25 of lead. The copper is added to the fused mass containing the other metals. See ALLOY and KINGSTON'S METAL; ANTIMONY.

ANTIMONY. (*Antimoine*, Fr.; *Spiessglanz*, or *Spiessglas*, Germ.) The only ore of this metal found in sufficient abundance to be smelted is the sulphide or sulphuret, formerly called crude antimony.

Antimony occurs with numerous ores of lead and silver, of nickel, &c., but the most important ore of antimony is the sulphuret (Stibnite, or Grey Antimony), which forms the chief and most common source of the antimony of commerce, and of the greater number of the pharmaceutical preparations of that metal. Antimony is not at present produced in this country, but in the last century it was mined extensively.

Antimony.—"Pendant quelque temps, l'antimoine a été exploité très-activement en Angleterre, dans les comtés de Cornouailles et de Devon, où la mine de Huel Boys produisait annuellement, vers 1775, 400 quintaux métriques de métal. Pendant quelque temps aussi, de riches mines d'antimoine ont été exploitées en Espagne, dans la province de la Manche: aujourd'hui elles ne donnent plus de produits."*

Stibnite, or Grey Antimony Ore, sometimes occurs compact, but usually in very long prismatic or acicular crystals, or in a fibrous form. It is of a lead or steel-grey colour, sometimes with an iridescent lustre, sectile and flexible when in thin laminæ. It may be distinguished from a similar ore of manganese by its perfect diagonal cleavage and easy fusibility. Grey antimony is composed of antimony 74, sulphur 26. It fuses readily in the flame of a candle, to which it imparts a greenish tint. On charcoal, in the flame of a blowpipe, it gives out a strong smell of sulphur, with white fumes, and yields a white slag. When pure, it is perfectly soluble in muriatic acid. Its specific gravity is 4·5.

The most celebrated localities of this ore are Felsobanya, Schemnitz, and Kremnitz, in Hungary, where it occurs in diverging prisms several inches long. It is also found in the Hartz, at Andreasberg, in Hungary, in Cornwall, at the old Trewetha mine, and abundantly in Borneo.

This ore was called by the ancients πλατυόφθαλμον — πλατὺς, *broad*, ὀφθαλμὸς, *eye* — from the use to which it was applied in increasing the apparent size of the eye, as is still practised among oriental nations, by staining the upper and under edges of the eyelids. It was also used as a hair dye and to colour the eyebrows.

It was the Lupus Metallorum of the alchemists. Crude antimony is obtained from it by simple fusion, and from this product the pure metal is extracted.

The other principal ores of antimony are the following:—

Native Antimony is a mineral of a tin-white colour and streak and a metallic lustre, and sometimes contains silver, iron, and arsenic, with which last it is commonly associated. It is brittle, and possesses a specific gravity of 6·62 to 6·72. It is generally lamellar, sometimes botryoidal, or reniform. Before the blowpipe it soon melts, and continues to burn after the heat is removed; but if the heat be continued, it evaporates in white fumes, and is redeposited round the globule.

Native antimony occurs at Sahlburg in Sweden, Andreasberg in the Hartz, Allemont in Dauphiny, in Mexico, &c.

* Encyclopédie Nouvelle. Paris, 1839.

Digitized by Google

Arsenical Antimony also occurs at Allemont, in the Hartz, and elsewhere, in reniform and amorphous masses, with a finely granular or a curved lamellar structure. It is composed of arsenic 62·15, antimony 57·85. It possesses a metallic lustre, and a reddish-grey or tin-white lustre. Its specific gravity is 6·2.

Oxide of Antimony (*Cervantite*) occurs, associated with grey antimony (of which it is an altered form), at Cervantes, in Spain, in Hungary, and the Auvergne. It is found in octahedral crystals, and in radiating fibrous crystals in the province of Constantina, in Algeria (*Senarmontite*), also at Perneck, in Hungary. It occurs as a crust or powder, or in acicular crystals, with a greasy or earthy lustre, and of a pale yellow or nearly white colour. Specific gravity = 40·8. It is composed of antimony 80·1, oxygen 19·9; but frequently it contains an admixture of iron, carbonate of lime, &c. It is soluble in muriatic acid.

White Antimony (*Valentinite*) is the result of the alteration of grey antimony, native antimony, and other ores of that metal. It possesses a shining pearly lustre and a snow-white colour, but is sometimes pinkish, or ash-grey, or brownish. It affords a white streak. It is composed of antimony 84·32, oxygen 15·68 Specific gravity = 5·56. It is found in tabular crystals in veins traversing the primary rocks at Przibram in Bohemia, near Freyberg in Saxony, Allemont in Dauphiny, &c.

Red Antimony (*Kermesite*) is a compound of oxide of antimony 30·2, and sulphide of antimony 69·8, or antimony 74·45, oxygen 5·29, and sulphur 20·49.

It occurs generally in capillary six-sided prismatic crystals of a cherry-red colour, affording a brownish-red streak. It has a specific gravity of from 4·5 to 4·6.

It is feebly translucent, and possesses an adamantine lustre. It occurs at Walaczka in Hungary, Braunsdorf in Saxony, and at Allemont in Dauphiny.

In treating the ores to obtain the metal, the first object is to separate the gangue, which was formerly done by filling crucibles with the mixed materials, placing them on the hearth of an oven, and exposing them to a moderate heat. As the sulphide easily melts, it ran out through a hole in the bottom of the crucible into a pot placed beneath, and out of the reach of the fire. But the great loss from the breakage of the crucibles has caused another method to be adopted. In this the broken ore, being sorted, is laid on the bottom of a concave reverberatory hearth, where it is reduced.

Figs. 65 and 66 represent a wind or flame furnace, for the reduction of antimony.

65

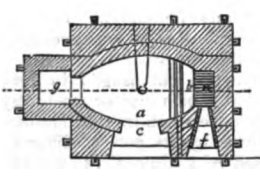

66

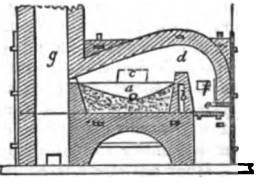

The hearth is formed of sand and clay solidly beat together, and slopes from all sides towards the middle, where it is connected with the orifice *a*, which is closed with dense coal-ashes; *b* is the air channel up through the bridge; *c*, the door for introducing the prepared ore, and running off the slags; *d*, the bridge; *e*, the grate; *f*, the fire or fuel-door; *g*, the chimney. With 2 or 3 cwts. of ore, the smelting process is completed in from 8 to 10 hours. The metal thus obtained is not pure enough, but must be fused under coal dust, in portions of 20 or 30 pounds, in crucibles placed upon a reverberatory hearth.

To obtain antimony free from iron, it should be fused with some antimonic oxide in a crucible, whereby the iron is oxidised and separated. The presence of arsenic in antimony is detected by the garlic smell, emitted by such an alloy when heated at the blowpipe; or, better, by igniting it with nitre in a crucible; in which case insoluble antimonite and antimoniate of potash will be formed along with soluble arseniate. Water digested upon the mixture, filtered, and then tested with nitrate of silver, will afford the brown-red precipitate characteristic of arsenic acid.

According to Berthier, the following materials afford, in smelting, an excellent product of antimony. From 100 parts of sulphide, 60 of protoxide of iron from the shingling or rolling mills (*hammerschlag*), 45 to 50 of carbonate of soda, and 10 of charcoal powder, from 65 to 70 parts of metallic antimony or regulus should be obtained. Glauber salts may be used advantageously instead of soda. Another formula is, 100 parts of sulphide of antimony, 42 of metallic iron, and 10 of dry sulphate of soda. The product thence is said to be from 60 to 64 parts of metal.

In the works where antimonial ores are smelted, by means of tartar (argol, bitartrate of potash), the alkaline scoriæ which cover the metallic ingots are not rejected as useless, for they hold a certain quantity of antimonial oxide in combination —a property of the potash flux which is propitious to the purity of the metal. These

Digitized by Google

scoriæ, consisting of sulphide of potassium and antimoniate of potash, being treated with water, undergo a reciprocal decomposition; the elements of the water act on those of the sulphide, and the resulting alkaline hydro-sulphide reacts on the antimonial solution so as to form a species of *kermes mineral*, which precipitates. This is dried, and sold at a low price as a veterinary medicine under the name of *kermes, by the dry way.*

At Malbosac, in the department of Ardèche, in France, the separation of the sulphide of antimony from its associated gangue is effected by means of a peculiar apparatus (see *fig.* 67). The mineral is placed in large retorts, RR, of which four are set in each furnace. An aperture is left at the bottom of each of these cylinders, which corresponds with a similar opening by which they are supported. Beneath these, in the chambers CC, are placed earthen pots, PP, in which is received the melted sulphide as it descends through the openings in the cylinders. The fuel consumed on the grate consists of fir wood; and the sulphide obtained is converted into metallic antimony by roasting in a reverberatory furnace, and subsequent reduction by a mixture of 20 per cent. of powdered charcoal which has been saturated with a strong solution of the carbonate of soda.

67

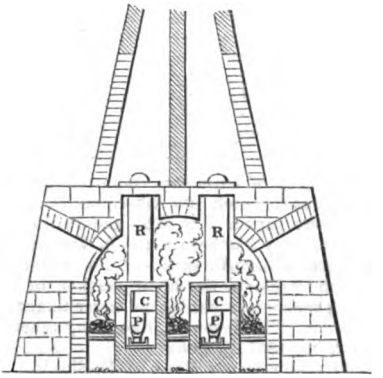

Metallic antimony, as obtained by the preceding process, is the antimony of commerce, but is not absolutely pure; containing frequently minute portions of iron, lead, and even arsenic, the detection and separation of which belong to the sciences of chemistry and pharmacy; but considerable purity may be secured by fusing the metal, mixed with a little of its sulphide and some carbonate of soda, repeatedly in a crucible. From 100 parts of the impure metal in this way 94 of pure antimony are obtained. The addition of sulphide serves the purpose, making fluid compounds of the sulphides of iron, arsenic, and copper, with the soda. Wöhler purifies antimony completely from arsenic (not from iron and copper) by deflagrating 10 parts of the crude ore with 12 of nitre and 15 of carbonate of soda; washes away the arsenic salt, and then smelts the residuary antimoniate of potash with black flux. Lead can be separated only by the humid analysis.

Antimony is a brittle metal, of a silvery white colour, with a tinge of blue, a lamellar texture, and crystalline fracture. When heated at the blowpipe, it melts with great readiness, and diffuses white vapours, possessing somewhat of a garlic smell. If thrown in this melted state on a flat sheet of paper, the globule sparkles and bursts into a multitude of small spheroids, which retain their incandescence for a long time, and run about on the paper, leaving traces of the white oxide produced during the combustion. When this oxide is fused with borax, or other vitrifying matter, it imparts a yellow colour to it. Metallic antimony, treated with hot nitric acid in a concentrated state, is converted into a powder, called antimonious acid, which is altogether insoluble in the ordinary acid menstrua—a property by which the chemist can separate that metal from lead, iron, copper, bismuth, and silver. According to Bergmann, the specific gravity of antimony is 6·86; but that of the purest is 6·715. The alchemists had conceived the most brilliant hopes of this metal; the facility with which it is alloyed with gold, since its fumes alone render this most ductile metal immediately brittle, led them to assign to it a royal lineage, and distinguished it by the title of *regulus*, or the little king.

Its chief employment is in making the alloys called type metal, stereotype metal, music plates, and Britannia metal; the first consisting of 6 of lead and 2 of antimony; the second of 6 of lead and 1 of antimony; the third of lead, tin, and antimony; and the fourth also of lead, tin, and antimony, with occasionally a little copper, bismuth, and nickel. Antimony is much used in alloys with tin, tin and lead, and in some cases copper, in various proportions, for machinery bearings, instead of gun metal. In cases of rapid and continuous revolution, as the shafts of screw-steamers, these are found much better than gun metal. It is also used by the Ordnance in hardening bullets and shot.—*Watts' Dictionary of Chemistry.*

Melted with tin, antimony has of late been used as an antifriction alloy for railway axles, and other bearings; in metallic rings, or collars, for machinery. As this alloy is not so much heated by friction as the harder metals, less grease is consumed.

Digitized by Google

French Mines in 1849 *producing Antimony.*

Departments.	Mines Worked.	Mines Not Worked.	Value of Products of Regulus of Antimony, Sulphuret of Antimony, Glass of Antimony (Crocus).
			Francs.
Ardèche	2	-	6,400
Cantal	-	1	
Gard	3	2	12,240
Haute-Loire	4	-	1,495
Lozère	2	2	12,648
Puy-de-Dome	-	4	

Sulphide of antimony imported into France in French ships pays a duty of 11 francs for each 100 kilogrammes; but, if in foreign vessels, 12 francs. Metallic antimony pays a duty of 26 and 28 francs for 60 centimètres.

Antimony has been found in Victoria, the antimony ore existing near Heathcote. Of this, Westgarth says:—"The antimony ore *appears to be unlimited in quantity*; but the value in the home market, of from 9*l.* to 10*l.* per ton, will not admit of its being touched as yet by the eager fingers of commerce, nor probably for some years to come. This resource, like many others, remains for the railway era."—*Westgarth's Victoria*, 1857, p. 114.

Professor Henry Rose, of Berlin, in a memoir on the natural, not oxidised, combinations of antimony and arsenic, gives the following analyses*:—

	1.	2.	3.	4.	5.	6.	7.	8.
Sulphur	22·58	21·95	22·15	22·53	19·72	16·42	20·31	17·04
Antimony	44·39	39·14	34·40	34·9	31·04	14·68	26·28	5·09
Lead	31·84	-	40·75	36·71	46·87	-	40·84	
Silver	-	36·40	-	-	-	68·54	-	64·29
Copper	0·42	1·06	0·13	0·19	-	0·64	12·65	9·23
Iron	-	0·62	2·30	2·65	1·30	-	-	0·06
Lime	-	-	-	-	0·08			
Arsenic	-	-	-	-	-	-	-	3·74
	99·23	99·17	99·73	96·17	99·01	100·28	100·08	100·15

1. *Zinkenite*, from the Wolfsberg, in the Eastern Hartz.
2. *Miargyrite*, from Bräunsdorff, in Saxony.
3, 4. *Jamesonite*, from Cornwall.
5. *Plumose Grey Antimony*, from the Wolfsberg, in the Eastern Hartz.
6. *Brittle Silver Glance*, from Schemnitz, Hungary.
7. *Bournonite*, from the Pfuffenburg mine, Eastern Hartz.
8. *Polybasite*, from Mexico.

Tartar Emetic (*Antimonii Tartarizatum*) and *James's Powder* (*Pulvis Antimonialis*) are preparations of this mineral. *Æthiop's Mineral* is the black oxide of antimony.

Our *Importations* of ANTIMONY in 1863 were:—

Ores	1,948 tons.
Crude	1,171 cwts.
Regulus	295 „

ANTIMONY, GLASS OF. This substance, according to M. Soubeiran, contains—

Protoxide of antimony	91·5
Silica	4·5
Peroxide of iron	3·2
Sulphuret of antimony	1·9
	101·1

* Brewster's Edin. Journ. ii. 359; Pogg. Ann. xv.

Digitized by Google

ANTISEPTICS. (From *ἀντί*, against; *σηπτός*, putrid.) Substances which prevent the spontaneous decomposition of animal and vegetable substances. These are chiefly the mineral acids — charcoal, chloride of lime, chlorine, culinary salt, nitre, spices, sugar, creosote, and yeast — which operate partly by inducing a change in the animal or vegetable fibres, and partly by combining with and rendering the aqueous constituent unsusceptible of decomposition. See FOOD; PROVISIONS, CURING OF; and PRESERVED MEATS.

ANVIL. A mass of iron, having a smooth and nearly flat top-surface of steel, upon which blacksmiths, and various other artificers, forge metals with the hammer. The common anvil is usually made of seven pieces: 1, the core, or body; 2, 3, 4, 5, the four corner-pieces, which serve to enlarge its base; 6, the projecting end, which has a square hole for the reception of the tail, or shank of a chisel, on which iron bars may be cut through; and 7, the beak, or horizontal cone, round which rods or slips of metal may be turned into a circular form, as in making rings. These six pieces are welded separately to the first, or core, and then hammered into a uniform body. In manufacturing large anvils, two hearths are needed, in order to bring each of the two pieces to be welded to a proper heat by itself; and several men are employed in working them together briskly in the welding state, by heavy swing hammers. The steel facing is applied by welding in the same manner. The anvil is then hardened by heating it to a cherry red, and plunging it into cold water — a running stream being preferable to a pool or cistern. The facing should not be too thick a plate; for, when such, it is apt to crack in the hardening. The face of the anvil is now smoothed upon a grindstone, and finally polished with emery and crocus, for all delicate purposes of art.

The blacksmith, in general, sets his anvil loosely upon a wooden block, and, in preference, on the root of an oak tree. The cutlers and file makers fasten their anvils to a large block of stone, their peculiar work rendering it an advantage to have the anvil fixed as firmly and solidly as possible.

The *whitesmith*, or *brightsmith*, when working at the anvil, unless the piece under the hammer should be very light, is assisted by a striker, who wields a sledge-hammer. In forging round articles, such as bolts, axles, &c., the smith makes use of swages — pieces of steel formed somewhat like hammer-heads — with a groove in one corresponding with a hollow in the other. In forging small spindles, the boss, or lower piece, is permanently fixed upon the anvil. For convenience in managing heavy articles, a crane is so fixed in the workshops, that the arm traverses between the fire and the anvil.

APPLE-TREE. (*Pyrus malus.*) The wood of the apple-tree is much used in the Tunbridge turnery manufacture, and the millwright employs the wood of the crab-tree for the teeth of mortise wheels.

APPLES. The fruit of the *Pyrus malus* (apple-tree). Employed in the manufacture of cider (*which see*).

APPLES (RAW) IMPORTED IN 1863:—

	Bushels.	Computed Real Value.
From Hamburg	30,374	£5,910
Holland	126,981	20,633
Belgium	525,706	87,379
France	501,197	79,042
Portugal	20,367	6,693
United States	46,953	30,905
Other Parts	10,629	4,400
	1,262,207	£234,962

Duty payable: 2*d.* per bushel when of British possessions; 3*d.* per bushel when not of British possessions.

APPLES (DRIED):—

	Bushels.	Computed Real Value.
From Hamburg	1,007	£896
France	5,551	5,674
Other Parts	498	495
	7,056	£7,065

1*s.* per bushel duty from 4th June, 1853.

APPLE WINE. Cider. Winckler finds that the wine from apples is distinguished from the wine from grapes by the absence of bitartrate of potash and of œnanthic acid, by its containing a smaller amount of alcohol and more tannin, but

Digitized by Google

especially by the presence of a characteristic acid, which he regards as lactic acid, notwithstanding that this opinion is not confirmed by the degree of solubility of its salts with oxide of zinc, lime, and magnesia. See CYDER.

AQUAFORTIS. Nitric acid, somewhat dilute, was so named by the alchymists on account of its strong solvent and corrosive operation upon many mineral, vegetable, and animal substances. It is still employed as the commercial name of nitric acid. See NITRIC ACID.

This acid has usually been obtained by mixing common nitre with green vitriol or sulphate of iron, and distilling, or by mixing nitre and clay or siliceous matter, and distilling over the nitric acid, leaving the alkali to unite with the earthy base.

It may, however, be usefully borne in mind, that this term of *aquafortis*, or *strong water* of the old chemist, was also applied to solutions which answered their special purposes. Thus Salmon, in 1685, gives the composition of aquafortis from certain mixtures of acids, not nitric, and salts, and distinctly refers to the Pharmacopœia for the other kind. This may be of service when applying old recipes for processes in the arts. Aquafortis did not always mean nitric acid.

AQUAMARINE is the name given to those varieties of beryl which are of clear shades of sky-blue or greenish-blue, like the sky. It occurs in longitudinally-striated hexagonal crystals, sometimes a foot long, and is found in the Brazils, Hindostan, and Siberia. See BERYL.

AQUA REGIA. *Royal water.* The name given by the alchymists to that mixture of nitric and muriatic acids which was best fitted to dissolve gold; it is now called *nitro-muriatic acid*, or *nitro-chlorohydric acid*, or *hypochloro-nitric acid.*

Aqua regia, prepared under different conditions, appears to give different results. Gay-Lussac observed that aqua regia, when heated in a water-bath, evolves a gaseous body which, dried and exposed to a frigorific mixture, separates into chlorine and a dark lemon-yellow liquid, boiling at 70° F. This yellow liquid was found to contain 69·4 per cent. of chlorine, the calculated quantity for the formula, NO^2Cl^2, being 70·2. Gay-Lussac refutes the assertion of E. Davy and Baudrimont, that the properties of aqua regia are due to its containing a compound of chlorine, nitrogen, and oxygen, and confirms the generally received view, that its action depends upon free chlorine. From the vapour evolved in the action of aqua regia upon gold, a liquid may be condensed which is nearly of the composition NO^2Cl^2, containing, however, no *free* chlorine.

AQUA VITÆ. The name given to alcohol when used as an intoxicating beverage. It has been the *aqua mortis* to myriads of the human race; and will, probably, ere long destroy all the native tribes of North America and Australia.

Dr. Ure's definition of the term is in every respect strictly correct; but it appears necessary to add to it the explanation, that it is derived from the alchymists who, having obtained—in all probability from the Arabian physicians, since Avicenna uses the term — the product by distillation of saccharine fermentation, *al-kohol* (alcohol), gave, upon the same principle as guided them in calling the nitro-muriatic acid *aqua regia*, the name of *aqua vitæ* to several ardent spirits; and it has been retained especially with reference to whisky and brandy.

ARABIC, GUM. Gum Arabic, exudes from several species of *acacia* and *prunus*; it is also found in the roots of the mallow, comfrey, and some other plants. Gum Arabic never crystallises, is transparent, and has a vitreous fracture.

ARABIN. The principal constituent of Gum Arabic. If gum is treated with hydrochloric and alcohol, the lime magnesia and potash, in combination, are decomposed, and the arabin is separated as a gum, exhibiting the properties of an acid. In the moist state it dissolves in cold water forming *mucilage*, from which it is precipitated by alcohol. After drying, it no longer dissolves, but swells into a gelatinous mass. Dried at 212° F. it has the composition $C^{12}H^{11}O^{11}$. See ACACIA, CERASINE, DEXTRINE, GUM.

ARAGONITE. So called from Aragon, in Spain, where it was first discovered. A carbonate of lime, crystallised in rhombic prisms, or in forms derived from the same. Sometimes written ARRAGONITE. See LIME.

ARBOR VITÆ. Several species of *thuja*, found in America and China, are called *arbor vitæ*. It is a light, soft, and fine-grained wood, which is used in several kinds of carpentry.

ARCH. As this dictionary is not intended to include articles connected with engineering or with architecture, it would be out of place to describe the conditions required to ensure the stability of the arch, which is manifestly one of great importance to the practical builder. (For the theory of the equilibrium of the arch, Gwilt's treatise on the subject should be consulted, or the article Arch, "Encyclopædia Britannica.") It simply remains to define the arch as a structure of stone or brick, supported by its own curve; or of wood or iron, supported by the mechanical arrangements of the work.

Digitized by Google

The curvature of an arch may vary very considerably. Where the arch is low, the circle it belongs to becomes very large: and the strength of arches varies greatly with their forms; they may be either segments of a circle, a parabola, an ellipse, an hyperbola, or a catenary.

The arch in architecture is the means of passing from one pillar to another; and we have the circular form, which was succeeded by the pointed arch, and all its modified forms of foliation, &c.

ARCHERY BOW. These are divided into the "*single-piece bow*" and the "*back* or *union bow.*"

The single-piece bow is made of one rod of hickory, lance-wood, or yew-tree, which last, if perfectly free from knots, is considered the most suitable wood.

The union bow is made of two or sometimes three pieces glued together. The "*back*" piece, or that furthest from the string, is of rectangular section, and always of lance-wood or hickory; the "*belly,*" which is nearly of semicircular section, is made of any hard wood that can be obtained straight and clean, as ruby-wood, rose-wood, green-heart, king-wood, snake-wood, &c. Sometimes the union bow is imitated by one solid piece of straight cocoa-wood of the West Indies (not that of the cocoa-nut palm), in which case the tough fibrous sap is used for the back. The Palmyrea is also used for bows. — *Holtzapffel.*

ARCHIL. (*Orseille*, Fr.; *Orseille*, Germ.; *Oricello*, Ital.) The name of archil is given to a colouring matter obtained, by the simultaneous action of the air, moisture, and an ammoniacal liquor, from many of the *lichens*, the most esteemed being the *lichen roccella.*

It appears in commerce in three forms: 1, As a pasty matter called *archil;* 2, as a mass of a drier character, named *persis;* and 3, as a reddish powder called *cudbear.*

The lichen from which archil is prepared is known also as the canary weed or orchilla weed. It grows in great abundance on some of the islands near the African coast, particularly in the Canaries and several of the Islands of the Archipelago. Its colour is sometimes a light and sometimes a dark grey.

There appears to be good evidence for supposing that archil was known to the Romans, and Beckmann is disposed to believe that the ancient Greeks were familiar with this dye. This ingenious and industrious author gives the following account of the modern introduction of the archil.

"Among the oldest and principal Florentine families is that known under the name of Oricellarii or Rucellarii, Ruscellai or Rucellai, several of whom have distinguished themselves as statesmen and men of letters. This family is descended from a German nobleman, named Ferro or Frederigo, who lived in the beginning of the 12th century. One of his descendants, in the year 1300, carried on a great trade in the Levant, by which he acquired considerable riches, and returning at length to Florence with his fortune, first made known in Europe the art of dyeing with archil. It is said that a little before his return from the Levant, happening to make water on a rock covered with this lichen, he observed that the plant, which was there called *respio* or *respo*, and in Spain *orciglia*, acquired by the urine a purple colour, or, as others say, a red colour. He, therefore, tried several experiments, and when he had brought to perfection the art of dyeing wool with this plant, he made it known at Florence, where he alone practised it for a considerable time, to the great benefit of the state. From this useful invention the family received the name of Oricellarii, from which at last was formed Rucellai." — *History of Inventions.*

For more than a century Italy possessed the exclusive art of making archil, obtaining the lichens from the islands of the Mediterranean. Teneriffe furnished annually 500 quintals (of 110 lbs. each) of lichen; the Canary Isles, 400; Fuerta Ventura, 300; Lancerot, 300; Gomera, 300; Isle of Ferro, 800. This business, in the islands of Teneriffe and Canary, belonged to the Crown of Spain, and in 1730 brought in a revenue of 1500 piastres. The farmers paid from 15 to 20 reals for the right to gather each quintal.

Since 1402 the largest quantity of the lichens for the preparation of archil has been obtained in the Canary Islands; a smaller quantity has, however, been procured from the Cape de Verde Islands. It is stated that the archil from the lichens of the latter place dye wool of a deeper colour than the archil from the Canaries, but that the dye is not so rich. The labour of collecting these lichens is very great, and men are exposed to the greatest risks, being suspended by cords over the face off stupendous cliffs. Upon the coasts of Spain, Scotland, and Ireland, the peasantry have for a very long period used lichens for the purpose of dyeing red.

The chemical constitution of archil was first investigated by M. Cocq, "Annales de Chimie," vol. lxxxi.; and subsequently, yet more extensively, by Robiquet, "Annales de Chimie," vol. xlii. 2nd series.

From the *Variolaria*, Robiquet obtained *Orcine*, by digesting the lichen in alcohol,

Digitized by Google

evaporating to dryness, dissolving the extract in water, concentrating the solution to the thickness of a syrup, and setting it aside to crystallise. It forms, when quite pure, colourless prisms, of a nauseous sweet taste, which fuse easily, and may be sublimed unaltered. Its formula is $C^{16}H^{8}O^{4}+3Aq.$ when sublimed; when crystallised from its aqueous solution it contains 5 Aq.

If orcine be exposed to the combined action of air and ammonia, it is converted into a crimson powder *orcëine*, which is the most important ingredient in the archil of commerce. *Orcëine* may be obtained by digesting dried archil in strong alcohol, evaporating the solution in a water-bath to dryness, and treating it with ether as long as anything is dissolved; it remains as a dark blood-red powder, being sparingly soluble in water or ether, but abundantly in alcohol. Its formula is $C^{16}H^{9}NO^{7}$.

Orcëine dissolves in alkaline liquors with a magnificent purple colour; with metallic oxides it forms lakes, also of rich purple of various shades. In contact with deoxidising agents, it combines with hydrogen, as indigo does, and forms leuc-orcëine, $C^{16}H^{9}NO^{7}+H$. When bleached by chlorine, a yellow substance is formed, *chlor*-orcëine, the formula of which is $C^{16}H^{9}NO^{7}+Cl$ analogous to the other. — *Kane.*

Dr. Schunk, by an examination of several species of Lecanora, has proved that, although under the influence of ammonia and of air, they ultimately produce orcëine, these lichens do not contain orcine ready formed, but another body, *Lecanorine*, which, under the influence of bases, acts as an acid, and is decomposed into orcine and carbonic acid. If lecanoric acid be dissolved in boiling alcohol, it unites with ether, forming lecanoric ether, which crystallises beautifully in pearly scales. In the *roccella tinctoria* and the *evernia prunastri* erytheric acid is found. By the oxidation of this acid *amarythrine* or *erythrine bitter* is formed. These substances have been carefully examined by Schunk, Stenhouse, and Kane. The chemical history of these and some other compounds is of great interest; but as they do not bear directly upon the manufacture of archil, or its use in dyeing, further space cannot be devoted to their consideration.

Kane found archil and litmus of commerce to contain two classes of colouring matters, as already stated, *orcine* and *orcëine*, derived from it. Beyond these there were two bodies, one containing nitrogen, *azoerythrine*, and the other destitute of nitrogen, *erythroleic* acid. This latter acid is separated from the other bodies present in archil by means of ether, in which it dissolves abundantly, forming a rich crimson solution. It gives with alkalis purple liquors, and with earthy and metallic salts coloured lakes.

Beyond those already named there are several other species of lichen which might be employed in producing an analogous dye, were they prepared, like the preceding, into the substance called *archil*. Hellot gives the following method for discovering if they possess this property. A little of the plant is to be put into a glass vessel; it is to be moistened with ammonia and lime-water in equal parts; a little muriate of ammonia (sal ammoniac) is added, and the small vessel is corked. If the plant be of a nature to afford a red dye, after three or four days the small portion of liquid which will run off on inclining the vessel, now opened, will be tinged of a crimson red, and the plant itself will have assumed this colour. If the liquor or the plant does not take this colour, nothing need be hoped for; and it is useless to attempt its preparation on the great scale. Lewis says, however, that he has tested in this way a great many mosses, and that most of them afforded him a yellow or reddish-brown colour; but that he obtained from only a small number a liquor of a deep red, which communicated to cloth merely a yellowish-red colour.

Prepared archil gives out its colour very readily to water, ammonia, and alcohol. Its solution in alcohol is used for filling spirit-of-wine thermometers; and when these thermometers are well freed from air, the liquor loses its colour in some years, as Abbé Nollet observed; but the contact of air restores the colour, which is destroyed anew, *in vacuo*, in process of time; but the watery infusion loses its colour, by the privation of air, in a few days; a singular phenomenon, which merits new researches.

The infusion of archil is of a crimson bordering on violet. As it contains ammonia, which has already modified its natural colour, the fixed alkalis can produce little change on it, only deepening the colour a little, and making it more violet. Alum forms in it a precipitate of a brown red; and the supernatant liquid retains a yellowish-red colour. The solution of tin affords a reddish precipitate, which falls down slowly; the supernatant liquid retains a feeble red colour.

The researches on the lichens, as objects of manufacture, by Westring, of Stockholm, are worthy of attention. He examined 150 species, among which he found several which might be rendered useful. He recommends that the colouring matter should be extracted in the places where they grow, which would save a vast expense in curing, package, carriage, and waste. He styles the colouring substance itself cudbear, persio, or turnsole; and distributes the lichens as follows:—1st. Those which,

Digitized by Google

left to themselves, exposed to moderate heat and moisture, may be fixed without a mordant upon wool or silk; such are the *L. cinereus, æmutonta, ventosus, corallinus, Westringii, saxatilis, conspassus, barbatus, plicatus, vulpinus*, &c.

2. Those which develope a colouring matter fixable likewise without mordant, but which require boiling and a complicated preparation; such are the lichens *subcarneus, dillenii, farinaceus, jubatus, furfuraceus, pulmonareus, cornigatus, cocciferus, digitatus, ancialis, aduncus*, &c. Saltpetre or sea-salt is requisite to improve the lustre and fastness of the dye given by this group to silk.

3. Those which require a peculiar process to develope their colour, such as those which become purple through the agency of stale urine or ammonia. Westring employed the following mode of testing:—He put 3 or 4 drachms of the dried and powdered lichen into a flask, moistened it with 3 or 4 measures of cold spring water, put the stuff to be dyed into the mixture, and left the flask in a cool place. Sometimes he added a little salt, saltpetre, quicklime, or sulphate of copper. If no colour appeared, he then moistened the lichen with water containing $\frac{1}{30}$th of sal ammoniac and $\frac{1}{10}$th of quicklime, and set the mixture aside in a cool place from 8 to 14 days. There appeared in most cases a reddish or violet coloured tint. Thus the *lichen cinereus* dyed silk a deep carmelite and wool a light carmelite; the *L. physodes* gave a yellowish-grey; the *pustulatus*, a rose red; *sanguinarius*, grey; *tartareus*, found on the rocks of Norway, Scotland, and England, dyes a crimson-red. Cudbear is made from it in Jutland by grinding the dry lichen, sifting it, then setting it to ferment in a close vessel with ammonia. The lichen must be of the third year's growth to yield an abundant dye; and that which grows near the sea is the best. It loses half its weight by drying. A single person may gather from 20 to 30 pounds a day in situations where it abounds. No less than 2,239,685 pounds were manufactured at Christiansand, Flekkefiort, and Fakrsund, in Norway, in the course of the six years prior to 1812. Since more solid dyes of the same shade have been invented, the archil has gone much into disuse.

To prepare archil, the lichens employed are ground up with water to a uniform pulp, and this is then mixed with as much water as will make the whole fluid; ammoniacal liquors from gas or from ivory-black works, or stale urine, are from time to time added, and the mass frequently stirred so as to promote the action of the air. The orcine or erythrine which exists in the lichen absorbs oxygen and nitrogen, and forms orcëine. The roccelline absorbs oxygen and forms *erythroleic acid*; these being kept in solution by the ammonia, the whole liquid becomes of an intense purple, and constitutes ordinary archil.—*Kane.*

Archil alone is not used for dyeing silk, unless for lilacs; but silk is frequently passed through a bath of archil, either before dyeing it in other baths or after it has been dyed, in order to modify different colours or to give them lustre. It is sufficient here to point out how white silks are passed through the archil bath. The same process is performed with a bath more or less charged with this colour, for silks already dyed.

Archil, in a quantity proportioned to the colour desired, is to be boiled in a copper. The clear liquid is to be run off quite hot from the archil bath, leaving the sediment at the bottom, into a tub of proper size, in which the silks, newly scoured with soap, are to be turned round on the skein-sticks with much exactness, till they have attained the wished-for shade. After this they must receive one beetling at the river.

Archil is, in general, a very useful ingredient in dyeing; but as it is rich in colour, and communicates an alluring bloom, dyers are often tempted to abuse it, and to exceed the proportions that can add to the beauty without at the same time injuring, in a dangerous manner, the permanence of the colours. Nevertheless, the colour obtained when solution of tin is employed, is less fugitive than without this addition: it is red, approaching to scarlet. Tin appears to be the only ingredient which can increase its durability. The solution of tin may be employed, not only in the dyeing bath, but for the preparation of the silk. In this case, by mixing the archil with other colouring substances, dyes may be obtained which have lustre with sufficient durability.

To dye wool with archil, the quantity of this substance deemed necessary according to the quantity of wool or stuff to be dyed, and according to the shade to which they are to be brought, is to be diffused in a bath of water as soon as it begins to grow warm. The bath is then heated till it be ready to boil, and the wool or stuff is passed through it without any other preparation except keeping that longest in which is to have the deepest shade. A fine gridelin, bordering upon violet, is thereby obtained; but this colour has no permanence. Hence archil is rarely employed with any other view than to modify, heighten, and give lustre to the other colours. Hellot says, that having employed archil on wool boiled with tartar and alum, the colour resisted the air no more than what had received no preparation. But he obtained from

Digitized by Google

herb archil (*l'orseille d'herbe*) a much more durable colour, by putting in the bath some solution of tin. The archil thereby loses its natural colour, and assumes one approaching more or less to scarlet, according to the quantity of solution of tin employed. This process must be executed in nearly the same manner as that of scarlet, except that the dyeing may be performed in a single bath.

Archil is frequently had recourse to for varying the different shades and giving them lustre; hence it is used for violets, lilacs, mallows, and rosemary flowers. To obtain a deeper tone, as for the deep *soupes au vin*, sometimes a little alkali or milk of lime is mixed with it. The suites of this browning may also afford agates, rosemary flowers, and other delicate colours, which cannot be obtained so beautiful by other processes.

The herb archil, just named, called especially *orcëille de terre*, is found upon the volcanic rocks of the Auvergne, on the Alps, and the Pyrenees.

These lichens are gathered by men whose whole time is thus occupied; they scrape them from the rocks with a peculiarly shaped knife. They prefer collecting the orcëille in rainy weather, when they are more easily detached from the rocks. They gather about 2 kilogrammes a day, or about 4½ pounds. When they take their lichens to the makers of archil or litmus for the purpose of selling them, they submit a sample to a test, for the purpose of estimating their quality. To this end they put a little in a glass containing some urine, with a small quantity of lime. As the lichens very rapidly pass into fermentation if kept in a damp state, and thus lose much of their tinctorial power, great care is taken in drying them; when dry they may be preserved without injury for some time.

Archil is perhaps too much used in some cloth factories of England, to the discredit of our dyes. It is said, that by its aid ⅓rd of the indigo may be saved in the blue vat; but the colour is so much the more perishable. The fine soft tint induced upon much of the black cloth by means of archil is also deceptive. One half pound of cudbear will dye one pound of woollen cloth. A crimson red is obtained by adding to the decoction of archil a little salt of tin (muriate), and passing the cloth through the bath after it has been prepared by a mordant of tin and tartar. It must be afterwards passed through hot water.

Dyeing with archil with the aid of oil has been patented by Mr. Lightfoot, on the same principle as has been so long used in the Turkey red cotton dye, who also has recourse to metallic and earthy bases. See CUDBEAR and LITMUS.

ARCHITECTURE. The art of constructing buildings, which involves the consideration of very dissimilar points.

1. UTILITY,— as it regards any specified object, as —
   - *a.* Domestic accommodation in a dwelling house.
   - *b.* Acoustic arrangements in all buildings intended for public purposes This consideration is entirely lost sight of by modern architects.
   - *c.* Ventilation, which is a matter upon which a very large amount of empiricism has been expended with exceedingly small results.

2. DURABILITY.— If we examine the walls of our ruined abbeys and castles, we shall find that the stones employed still retain the marks of the workman's tool; and that in numerous cases the ornamental work is as sharp as if it had been executed but yesterday. This should prove to us that the selection of stone was of great importance.

ARECA. A genus of palms, containing two species—1. The *Areca catechu*, producing the betel nut, which is so universally chewed in the East Indies. 2. The *Areca oleracea*, or cabbage palm; the cabbage is eaten in the West Indies, both raw and boiled; and the trunk, which is often 100 feet long, is used in Jamaica for water pipes, which are said to become, when buried, almost as hard as iron.

It is one of the most beautiful palm trees growing in India. It is chiefly cultivated in Malabar, Ceylon, and Sumatra. One tree will produce, according to situation, age, and culture, from 200 to 800 nuts.

The exports of the Areca nut from Ceylon have been of late years as follows:—

	Cwts.	Value.		Cwts.	Value.
1860 - -	75,996	£56,997	1862 - -	53,372	£41,529
1861 - -	69,558	52,168	1863 - -	68,406	51,304

AREOMETER. An instrument to measure the densities of liquids. (See ALCOHOLOMETRY.) The principle will be well understood by remembering that any solid body will sink further in a light liquid than in a heavy one. The areometer is usually a glass tube, having a small glass bulb loaded with either shot or quicksilver, so as to set the tube upright in any fluid in which it will swim. Within the tube is placed a graduated scale: we will suppose the tube placed in distilled water, and the line cut by the surface of the fluid to be marked; that it is then removed and placed in strong alcohol—the tube will sink much lower in this, and consequently we shall have two extremities of an arbitrary scale, on which we can mark any intermediate degrees.

Digitized by Google

The areometer of Baumé is used in France, and the following scale is adopted by the French chemists: —

Specific Gravity Numbers corresponding with Baumé's Areometric Degrees.

Liquids denser than Water.						Less dense than Water.			
Degrees.	Specific Gravity.	Degrees.	Specific Gravity.	Degrees.	Specific Gravity.	Degrees.	Specific Gravity.	Degrees.	Specific Gravity.
0	1·0000	26	1·2063	52	1·5200	10	1·0000	36	0·8488
1	1·0066	27	1·2160	53	1·5353	11	0·9932	37	0·8439
2	1·0133	28	1·2258	54	1·5510	12	0·9865	38	0 8391
3	1·0201	29	1.2358	55	1·5671	13	0·9799	39	0·8343
4	1·0270	30	1·2459	56	1·5833	14	0·9733	40	0·8295
5	1·0340	31	1·2562	57	1·6000	15	0·9669	41	0·8249
6	1·0411	32	1·2667	58	1·6170	16	0·9605	42	0·8202
7	1·0483	33	1·2773	59	1·6344	17	0·9542	43	0·8156
8	1·0556	34	1·2881	60	1·6522	18	0·9480	44	0·8111
9	1·0630	35	1·2992	61	1·6705	19	0·9420	45	0·8066
10	1·0704	36	1·3103	62	1·6889	20	0·9359	46	0·8022
11	1·0780	37	1·3217	63	1·7079	21	0·9300	47	0·7978
12	1·0857	38	1·3333	64	1·7273	22	0·9241	48	0·7935
13	1·0935	39	1·3451	65	1·7471	23	0·9183	49	0·7892
14	1·1014	40	1·3571	66	1·7674	24	0·9125	50	0·7849
15	1·1095	41	1·3694	67	1·7882	25	0·9068	51	0·7807
16	1·1176	42	1·3818	68	1·8095	26	0·9012	52	0·7766
17	1·1259	43	1·3945	69	1·8313	27	0·8957	53	0·7725
18	1·1343	44	1·4074	70	1·8537	28	0·8902	54	0·7684
19	1·1428	45	1·4206	71	1·8765	29	0·8848	55	0·7643
20	1·1515	46	1·4339	72	1·9000	30	0·8795	56	0·7604
21	1·1603	47	1·4476	73	1·9241	31	0·8742	57	0·7656
22	1·1692	48	1·4615	74	1·9487	32	0·8690	58	0·7526
23	1·1783	49	1·4758	75	1·9740	33	0·8639	59	0·7487
24	1·1875	50	1·4902	76	2·0000	34	0·8588	60	0·7449
25	1·1968	51	1·4951			35	0·8538	61	0·7411

ARENACEOUS. *Arena*, sand. Sandy. Rocks composed of particles of sand, or, as the grits and sandstones containing much sand are said to be *arenaceous*. If they contain lime they are called *arenaceo-calcarĕous*.

ARGILLACEOUS. Composed of clay, or clayey. This name is applied to all rocks composed of clay. The compound rocks are distinguished as *argillo-arenaceous* or *argillo-calcareous*. Argillaceous rocks, when breathed on, have a peculiar earthy odour, by which they may be distinguished.

ARGILLACEOUS EARTH. (*Argilla*, clay, Lat.) The earth of clay, called in chemistry, alumina, because it is obtained in greatest purity from alum. See ALUMINA, CHINA CLAY, CLAY, KAOLIN.

ARGOL, or ARGAL. (*Tartre*, Fr.; *Weinstein*, Germ.) This tartrate of potash is known in commerce as the white and red argol; the white being the crust let fall by white wines, which is of a pale pinkish colour, and the red the crust deposited from red wines, and of a dark red colour. See TARTAR, CREAM OF TARTAR, &c.

The Imports were in 1853, 32,936; 1854, 29,971; 1855, 18,466; 1856, 18,875 cwts. In 1864, they were greatly reduced, as shown below :—

	Cwts.	Computed Real Value.
From Hamburg	656	£2,176
France	5,780	18,261
Portugal	1,105	2,357
Italy: Tuscany	834	3,145
Naples and Sicily	4,197	13,750
British Possessions in South Africa	737	3,319
Other Parts	1,089	3,998
	14,398	47,006

Digitized by Google

ARICINE. ($C^{16}H^{26}N^2O^5$) An alkaloid discovered by Pelletier and Corriol in a cinchona bark from Arica in Peru. It is separated by the same process as quinine.

ARMENIAN BOLE. See BOLE.

ARMENIAN STONE. Commercial name for LAPIS LAZULI, which see.

ARNATTO, ARNOTTO, or ANNOTTO. (*Rocou* or *roucou*, Fr.; *Orleans*, Germ.) A somewhat dry and hard paste, brown without and red within. It is usually imported in cakes of two or three pounds weight, wrapped up in leaves of large reeds, packed in casks, from America, where it is prepared from the seeds of a certain tree, called the *arnatto tree*; it is the *Bixa orellana* of Linnæus.

The shrub producing the arnatto is originally a native of South America; it is now cultivated in Guiana, St. Domingo, and in the East Indies. In the "Annales de Chimie" we have the following description of the arnatto tree:—"The tree produces oblong bristled pods, somewhat resembling those of a chesnut. These are at first of a beautiful rose colour, but, as they ripen, change to a dark brown; and bursting open, display a splendid crimson farina or pulp, in which are contained from thirty to forty seeds, somewhat resembling raisin stones. As soon as they arrive at maturity, these pods are gathered, divested of their husks, and bruised. Their pulpy substance, which seems to be the only part which constitutes the dye, is then put into a cistern, with just enough water to cover it, and in this situation it remains for seven or eight days, or until the liquor begins to ferment, which, however, may require as many weeks, according to circumstances. It is then strongly agitated with wooden paddles or beaters, to promote the separation of the pulp from the seeds. This operation is continued until these have no longer any of the colouring matter adhering to them; it is then passed through a sieve, and afterwards boiled, the colouring matter being thrown to the surface in the form of scum, or, otherwise, allowed to subside: in either case, it is boiled in coppers till reduced to a paste, when it is made into cakes and dried."

Instead of this long and painful labour, which occasions diseases by the putrefaction induced, and which affords a spoiled product, Leblond proposes simply to wash the seeds of the bixa till they are entirely deprived of their colour, which lies wholly on their surface; to precipitate the colour by means of vinegar or lemon juice, and to boil it up in the ordinary manner, or to drain it in bags, as is practised with indigo.

The experiments which Vauquelin made on the seeds of the bixa, imported by Leblond, confirmed the efficacy of the process which he proposed; and the dyers ascertained that the arnatto obtained in this manner was worth at least four times more than that of commerce; that, moreover, it was more easily employed; that it required less solvent; that it gave less trouble in the copper, and furnished a purer colour.

Arnatto dissolves better and more readily in alcohol than in water, when it is introduced into the yellow varnishes for communicating an orange tint.

The decoction of arnatto in water has a strong peculiar odour, and a disagreeable taste. Its colour is yellowish-red, and it remains a little turbid. An alkaline solution renders its orange-yellow clearer and more agreeable, while a small quantity of a whitish substance is separated from it, which remains suspended in the liquid. If arnatto be boiled in water along with an alkali, it dissolves much better than when alone, and the liquid has an orange hue.

The acids form with this liquor an orange-coloured precipitate, soluble in alkalis, which communicate to it a deep orange colour. The supernatant liquor retains only a pale yellow hue.

When arnatto is used as a dye, it is always mixed with alkali, which facilitates its solution, and gives it a colour inclining less to red. The arnatto is cut in pieces, and boiled for some instants in a copper with its own weight of crude pearl ashes, provided the shade wanted do not require less alkali. The cloths may be afterwards dyed in this bath, either by these ingredients alone, or by adding others to modify the colour; but arnatto is seldom used for woollen, because the colours which it gives are too fugitive, and may be obtained by more permanent dyes. Hellot employed it to dye a stuff prepared with alum and tartar; but the colour acquired had little permanence. It is almost solely used for silks.

For silks intended to become aurora and orange, it is sufficient to scour them at the rate of 20 per cent. of soap. When they have been well cleansed, they are immersed in a bath prepared with water, to which is added a quantity of alkaline solution of arnatto more or less considerable, according to the shade that may be wanted. This bath should have a mean temperature between that of tepid and boiling water.

When the silk has become uniform, one of the hanks is taken out, washed, and wrung, to see if the colour be sufficiently full; if it be not so, more solution of

Digitized by Google

arnatto is added, and the silk is turned again round the sticks: the solution keeps without alteration.

When the desired shade is obtained, nothing remains but to wash the silk, and give it two beetlings at the river, in order to free it from the redundant arnatto, which would injure the lustre of the colour.

When raw silks are to be dyed, those naturally white are chosen, and dyed in the arnatto bath, which should not be more than tepid, or even cold, in order that the alkali may not attack the gum of the silk, and deprive it of the elasticity which it is desirable for it to preserve.

What has now been said regards the silks to which the aurora shades are to be given: but to make an orange hue, which contains more red than the aurora, it is requisite, after dyeing with arnatto, to redden the silks with vinegar, alum, or lemon juice. The acid, by saturating the alkali employed for dissolving the arnatto, destroys the shade of yellow that the alkali had given, and restores it to its natural colour, which inclines a good deal to red.

For the deep shades, the practice at Paris, as Macquer informs us, is to pass the silks through alum; and if the colour be not red enough, they are passed through a faint bath of brazil wood. At Lyons, the dyers who use carthamus sometimes employ old baths of arnatto for dipping the deep oranges.

When the orange hues have been reddened by alum, they must be washed at the river; but it is not necessary to beetle them, unless the colour turns out too red.

Shades may be obtained also by a single operation, which retain a reddish tint, employing for the arnatto bath a less proportion of alkali than has been pointed out.

Guhliche recommends to avoid heat in the preparation of arnatto. He directs it to be placed in a glass vessel, or in a glazed earthen one; to cover it with a solution of pure alkali; to leave the mixture at rest for 24 hours; to decant the liquor, filter it, and add water repeatedly to the residuum, leaving the mixture each time at rest for two or three days, till the water is no longer coloured; to mix all these liquors, and preserve the whole for use in a well-stopped vessel.

He macerates the silk for 12 hours in a solution of alum, at the rate of an eighth of this salt for one part of silk, or in a water rendered acidulous by the aceto-citric acid above described; and he wrings it well on its coming out of this bath.

Silk thus prepared is put into the arnatto bath quite cold. It is kept in agitation there till it has taken the shade sought for; or the liquor may be maintained at a heat far below ebullition. On being taken out of the bath, the silk is to be washed and dried in the shade.

For lighter hues, a liquor less charged with colour is taken; and a little of the acid liquor which has served for the mordant may be added, or the dyed silk may be passed through the acidulous water.

We have seen the following preparation employed for cotton velvet:—1 part of quicklime, 1 of potash, 2 of soda.

Of these a ley is formed, in which 1 part of arnatto is dissolved; and the mixture is boiled for an hour and a half. This bath affords the liveliest and most brilliant auroras. The buff (chamois) fugitive dye is also obtained with this solution. For this purpose only a little is wanted; but we must never forget that the colours arising from arnatto are all fugitive.

Dr. John found in the pulp surrounding the unfermented fresh seeds, which are about the size of little peas, 28 parts of colouring resinous matter, 26·5 of vegetable gluten, 20 of ligneous fibre, 20 of colouring extractive matter, 4 formed of matters analogous to vegetable gluten and extractive, and a trace of spicy and acid matters.

The Gloucestershire cheese is coloured with arnatto, in the proportion of one cwt. to an ounce of the dye: butter is sometimes coloured with it.

When used in calico printing, it is usually mixed with potash or ammonia and starch.

Arnatto was considered to contain two distinct colouring matters, a yellow and red, till it was shown by M. Preisser that one is the oxide of the other, and that they may be obtained by adding a salt of lead to a solution of arnatto, which precipitates the colouring matter. The lead is separated by sulphuretted hydrogen; and the substance being filtered and evaporated, the colouring matter is deposited in small crystals of a yellow-white colour. These crystals consist of *bixine*; they become yellow by exposure to the air, but if they are dissolved in water they undergo no change. When ammonia is added to *bixine*, with free contact of air, there is formed a fine deep red colour, like arnatto, and a new substance, called *bixeine*, is produced, which does not crystallise, but may be obtained as a red powder; this is coloured blue by sulphuric acid, and combines with alkalis, and is *bixine* with addition of oxygen. When arnatto, in the form of paste, is mixed from time to time with stale urine, it

Digitized by Google

appears probable that the improvement consists in the formation of *bixeine* from the *bixine* by the ammonia of the urine. It has hence been suggested that, to improve the colour of arnatto, it might be mixed with a little ammonia, and subsequently exposed to the air, previously to its being used for dyeing.

A solution of arnatto and potash in water is sold under the name of *Scott's Nankeen Dye.*

Flag arnatto paid a duty of 18*s.* 8*d.* per cwt., and the other sorts 5*l.* 12*s.*, previously to 1832. The duty was subsequently reduced to 1*s.* per cwt. on the former and 4*s.* on the latter. It was repealed in 1845. The *Imports* of roll and flag arnatto in 1863 were as follows :—

ROLL, 761 cwts, value £2,853.
FLAG, 2,507 cwts, value £10,111.

and in 1864, we received the quantities given from the countries named.

	Cwts.	Computed Real Value.
ROLL :—		
From France	105	£366
Portugal	26	85
Brazil	435	1,335
Other Parts	1	3
	567	1,789
FLAG :—		
From France	2,455	11,889
Portugal	132	631
Brazil	82	402
British Guiana	527	2,674
	3,196	15,596

ARNICA. A genus of plants belonging to the Nat. Ord. *Compositæ*, and sub-order *Corymbifera*. The *Arnica Montana*, called Leopard's Bane, or Mountain Tobacco, is a native of the north of Europe, and of the Alps. The plant contains a volatile oil, *oil of Arnica*; and an alkaline bitter principle, *Arnicine*. It is used occasionally in medicine.

AROMATIC VINEGAR. (*Acetum aromaticum.*) This is a compound of strong acetic acid with certain powerful essential oils or aromatic herbs. The "Edinburgh Pharmacopœia" orders it to be made with, concentrated acetic acid, 1½ pints; rosemary and thyme dried, of each 1 oz.; lavender, also dried, ½ oz.; cloves, bruised, ½ drachm. Macerate for seven days, strain, and express strongly, and filter the liquor. *Henry's aromatic vinegar* is prepared by dissolving oils of cloves, lavender, rosemary, and the like, in concentrated acetic acid. Camphorated acetic acid is sometimes substituted for the *acetum aromaticum.* These preparations have been in great repute as prophylactics in contagious fevers. The name of "*Le vinaigre des quatre voleurs*" has been given to aromatic vinegar in France—it is said, from the confessions of four thieves who, during the plague at Marseilles, plundered the dead bodies with perfect impunity after protecting themselves with aromatic vinegar.

ARQUERITE. A silver amalgam from the mines of Arquerous, near Coquimbo. It occurs crystalline. Domeyko finds it to consist of silver 86·49, mercury 13·51.

ARRACK. A spirituous liquor from the East Indies. This term, or its corruption, *rack*, is applied to any spirituous liquor in the East. The true arrack is said to be distilled from *toddy*—the fermented juice of the cocoa-nut tree. It is, however, frequently distilled from rice and sugar fermented with the cocoa-nut juice.

ARROBA. A measure of capacity and weight in general use throughout all those parts of South America which ever belonged to Spain. It is also used in Manilla and the East. According to Spanish standard weight, it should be 25·36 lbs. English. As a wine measure it is equal to 3·54 imperial gallons; as an oil measure it is but 2·78 imperial gallons.

ARROPE. Sherry boiled to a syrup; used for colouring other wines.

ARROWROOT. (*Racine fléchière*, Fr.; *Pfeilwurz*, Germ.) The root of the *maranta arundinacea*, a plant which grows in the West Indies, and furnishes, by pounding in mortars and elutriation through sieves, a peculiar species of starch, commonly, but improperly, called arrow root. It is reckoned more nourishing than the starch of wheat or potatoes, and is generally also freer from peculiar taste or flavour. The fresh root consists, according to Benzon, of 0·07 of volatile oil; 26 of starch (23 of which are obtained in the form of powder, while the other 3 must be extracted from the parenchyma in a paste by boiling water); 1·58 of vegetable albumen; 0·6 of a gummy extract; 0·25 of chloride of calcium; 6 of insoluble fibrine; and 65·5 of water. This plant was brought from the Island of Dominica, by Colonel James

Digitized by Google

Walker, to Barbadoes, and there planted. From thence it was sent to Jamaica. The root appears to have been used by the Indians to yield a poison with which to smear their arrows, and hence its name.

This plant has been lately cultivated with great success, and its root manufactured in a superior manner, upon the Hopewell estate, in the Island of St. Vincent. It grows there to the height of about 3 feet, and it sends down its tap roots from 12 to 18 inches into the ground. Its maturity is known by the flagging and falling down of the leaves, which takes place when the plant is from 10 to 12 months old. The roots being dug up with the hoe are transported to the washing-house, where they are thoroughly freed from all adhering earth, and next taken individually in the hand, and deprived by a knife of every portion of their skins, while every unsound part is cut away. This process must be performed with great nicety, for the cuticle contains a resinous matter which imparts colour and a disagreeable flavour to the fecula which no subsequent treatment can remove. The skinned roots are thrown into a large cistern, with a perforated bottom, and there exposed to the action of a copious cascade of pure water till this runs off quite unaltered. The cleansed roots are next put into the hopper of the mill, and are subjected to the powerful pressure of two pairs of polished rollers of hard brass, the lower pair of rollers being set much closer together than the upper. (See *fig.* 67.) The starchy matter is thus ground into a pulp, which falls into the receiver placed beneath, and is thence transferred to large fixed copper cylinders, tinned inside, and perforated at the bottom with numerous minute orifices, like a kitchen drainer. Within these cylinders, wooden paddles are made to revolve with great velocity, by the power of a water-wheel, at the same time that a stream of pure water is admitted from above. The paddle arms beat out the fecula from the fibres and parenchyma of the pulp, and discharge it in the form of a milk through the perforated bottom of a cylinder. This starchy water runs along pipes, and then through strainers of fine muslin, into large reservoirs, where, after the fecula has subsided, the supernatant liquid is drawn off, and fresh water being let on, the whole is agitated and left again to repose. When the water ceases to remove anything from the arrow root, all the deposits of fecula are collected into one cistern, covered, and agitated with a fresh charge of water, and left until the following morning. The water being allowed to run off, the surface of the deposit is carefully scraped with German silver palette knives, to remove any impure or coloured parts, and the lower portions only are dried and prepared for the market. The greatest care is taken in drying; and when dry, the fecula is packed in tin cases for exportation.

Fig. 68 (p. 192), plan of arrow root grinding mill, and two sets of copper cylinder washing machines, with the connecting machinery for driving them, the washing agitator being driven from the connecting shaft with leathern belts. *Fig.* 69, end elevation of copper washing cylinder, with press framing, &c. The washing cylinders are 6½ feet long and 3½ in diameter. The mill rollers are 3 feet long and 1 foot in diameter. *Fig.* 70, end elevation of arrow-root mill, with wheels and pinions, disengaging lever, &c.

69

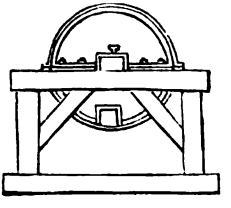

Arrow root is brought into the market from Bermuda, St. Vincent, Jamaica, Brazil, the East Indies, Natal, and Sierra Leone. It is subject to a duty of 4*s.* per cwt. The Bermuda arrow root was in 1865 sold wholesale at 1*s.* 2*d.* the pound, the other sorts varying from 2½*d.* to 6*d.*

70

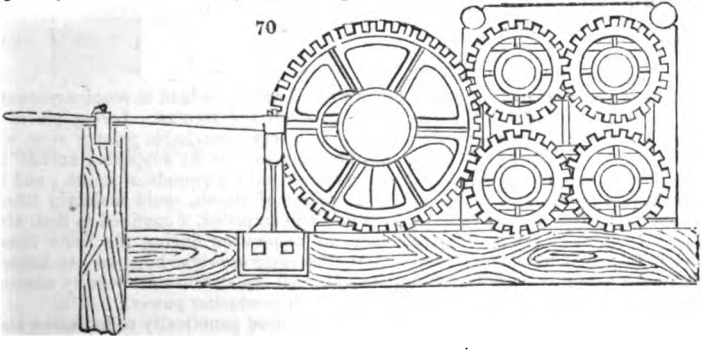

Digitized by Google

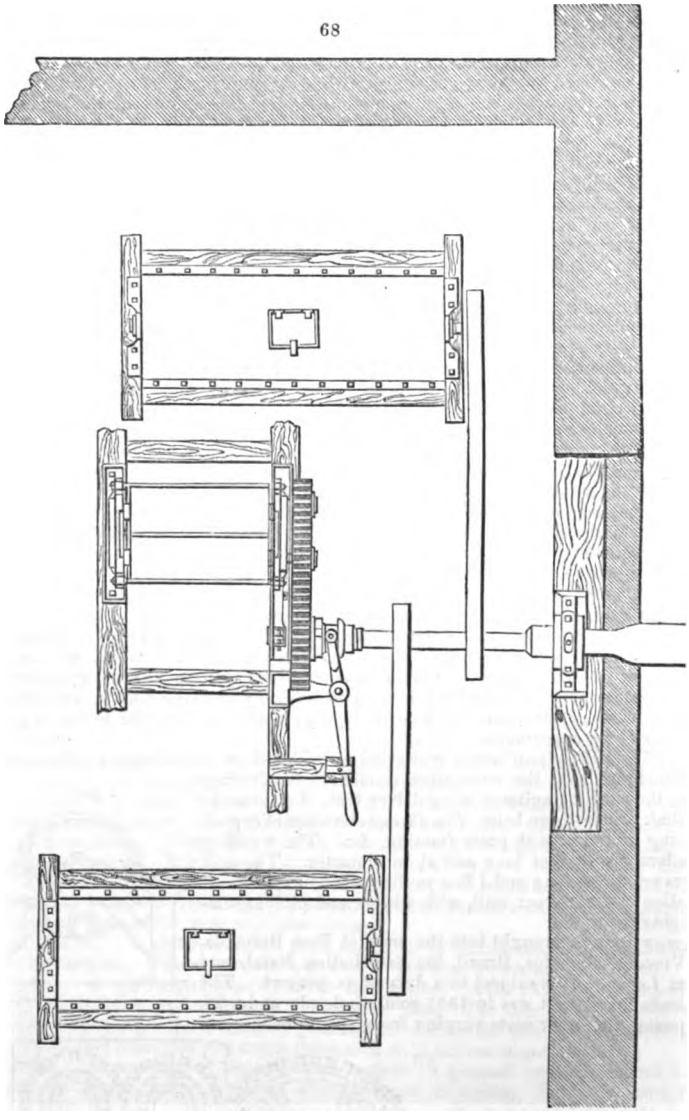

The uses of arrow root are too well known and acknowledged to require recounting here. It is the most elegant and the richest of all the feculas. Liebig places the powers of arrow root, as a nutriment to man, in a very remarkable point of view, when he states that 15 pounds of flesh contain no more carbon for supplying animal heat by its combustion into carbonic acid in the system than 4 pounds of starch; and that if a savage, with one animal and an equal weight of starch, could maintain life and health for a certain number of days, he would be compelled, if confined to flesh alone, in order to procure the carbon necessary for respiration during the same time, to consume five such animals. The German Professor appears, however, to have lost sight of the nitrogen, or flesh-giving element. All the starches are readily converted into sugar and fat, but they are low in their flesh-producing power.

In commerce, the term *arrow root* is frequently used generically to indicate a starch or fecula, as:—

Digitized by Google

Portland arrow root, a white amylaceous powder, prepared in the Isle of Portland, from the *Arum vulgare*, the *common Cuckoo-pint*, called also *Wake-robin* and *Lords and Ladies*.

East India arrow root, prepared from the *Curcuma angustifolia*.

Brazilian arrow root, the fecula of *Jatropha manihot*.

English arrow root, the starch of the potato.

Tahiti arrowroot, the feculæ of *Tacca oceanica*, which is imported into London and sold as "arrow-root prepared by the native converts at the missionary stations in the South Sea Islands."

The presence of potato starch in arrow root, with which it is often adulterated, may be discovered by the microscope. Arrow root consists of regular ovoid particles of nearly equal size, whereas potato starch consists of particles of an irregular ovoid or truncated form, exceedingly irregular in their dimensions, some being so large as $\frac{1}{300}$th of an inch, and others only $\frac{1}{2000}$th. Their surfaces in the arrowroot are smooth, and free from the streaks and furrows to be seen in the potato particles by a good microscope. The arrow root, moreover, is destitute of that fetid unwholesome oil extractable by alcohol from potato starch. But the most convenient test is dilute nitric acid of 1·10 (about the strength of single aquafortis), which, when triturated in a mortar with the starch, forms immediately a transparent very viscid paste or jelly. Flour starch exhibits a like appearance. Arrow root, however, forms an opaque paste, and takes a much longer time to become viscid.

Imports and Exports.

In 1864 *we imported* as follows :—

	Cwts.	Computed real value.
From Portugal	1	£1
„ British Possessions in South Africa	1,534	5,092
„ the Bermudas	332	3,495
„ British West India Islands	13,958	33,603
„ Other Parts	975	1,699
	16,800	43,890

and our *exports* of Arrow root of Foreign and Colonial produce was :—

	Cwts.	Value.
Arrow root	2,188	£5,908

The irregular production of this article is shown in the following table of the produce of St. Vincent, as given by R. Montgomery Martin :—

	lbs.		lbs.
In 1828 it was	2,000	In 1832 it was	250
„ 1829 „	21,250	„ 1834 „	25,626
„ 1831 „	3,763	„ 1836 „	49,369

The exports, in recent years, from St. Vincent's have been as follows :—

	Barrels.	Tins.	Packages.	Value.
1858	6,128	23,983	620	£24,083
1859	8,078	16,552	495	27,576
1860	6,493	11,020	738	16,482
1861	6,430	11,847	314	£16,040
1862	3,747	1,787	6,804	9,328

The produce of the island of Bermuda was, in 1836, according to R. Montgomery Martin, 216,663 lbs., and the exports of Arrow root were :—in 1830, 18,174 lbs., and in 1836, 76,699 lbs. The exports from that island of late years being—

	Tons.	Value.		Tons.	Value.
1857	45	£6,288	1860	40¾	£4,134
1858	46	5,451	1861	49¼	4,293
1859	21	2,853	1862	19	1,713

The exports from Jamaica were :—

	lbs.	Value.
1860	483,683	£10,794
1861	35,361	
1862	no return.	

and the exports from Natal, in South Africa, as follows :—

	Cwt.	Value.
1860	3,679	£6,680
1861	2,436	4,685
1862	983	1,547

Digitized by Google

Of arrow root prepared in the United Kingdom, we *exported*, in 1856, 21,243 lbs. the declared value of which was 714*l*. No returns of any exportation of any British arrow root have been made for some years; we may, therefore, infer that the manufactory has greatly declined.

ARSENIC, derived from the Greek ἀρσενικὸν, *masculine*, applied to orpiment on account of its potent powers. This metal occurs native, in veins, in crystalline rocks, and the older schists; it is found in the state of oxide, and also combined with sulphur under the improper name of *yellow* and *red arsenic*, or orpiment and realgar. Arsenic is associated with a great many metallic ores; but it is chiefly extracted in this country from those of tin, by roasting, in which case the white oxide of arsenic, or, more correctly, the arsenious acid, is obtained. On the Continent, arsenical cobalt is the chief source of arsenic.

The following are the principal ores of arsenic:—

Native Arsenic.—The most common form of native arsenic is reniform and stalactitic masses, often mammillated, and splitting off in thin successive layers like those of a shell. It possesses a somewhat metallic lustre, and a tin-white colour and streak, which soon tarnishes to a dark grey. Its specific gravity is 5·93. Before the blowpipe it gives out an alliaceous odour, and volatilises in white fumes. It is found in the silver mines of Freiberg, Annaberg, Marienburg, and Schneeberg, also Joachimsthal in Bohemia, Andreasberg in the Hartz, Kopnip in Transylvania, Orawitza in the Bannat, Kongsberg in Norway, Zimeoff in Siberia, in Alsace, and, according to Dana, at Haverhill, N. H. in the United States.

Arsenical Antimony. This mineral occurs at Allemont; also at Przibram in Bohemia, where it occurs in metallic veins associated with blende, antimony, and spathic iron; at Schladming in Styria; and Andreasberg in the Hartz. Its composition is:—Arsenic, 63·62; antimony, 36·38. When exposed to the action of the blowpipe, this mineral emits fumes of arsenic and antimony, and fuses to a metallic globule, which takes fire and burns away, leaving oxide of antimony on the charcoal.

White Arsenic or Arsenious Acid (*Arsenolite*), is often formed by the decomposition of other arsenical ores, and is composed of arsenic 65·76, and oxygen 24·24. It occurs either in minute radiating capillary crystals and crusts investing other substances, or in a stalactitic or botryoidal form. Before the blowpipe it volatilises in white fumes: in the inner flame it blackens and gives out an alliaceous odour; its specific gravity is 3·69. It is white, sometimes with a yellowish or reddish tinge, and has a silky or vitreous lustre. It possesses an astringent, sweetish taste.—H. W. B.

Realgar (anciently called *Sandaraca*), red orpiment, or ruby sulphur, is a *sulphide of arsenic*, having a composition: sulphur 29·91, arsenic 70·09. It occurs in Hungary, Saxony, and Switzerland.

Orpiment (a corruption of its Latin name, *auripigmentum*—golden paint), yellow sulphide of arsenic: its composition is, sulphur 39, arsenic 61. Burns with a blue flame on charcoal, and emits fumes of sulphur and arsenic. Dissolves in nitro-muriatic acid and ammonia.

Both realgar and orpiment are artificially prepared and used as pigments. See ORPIMENT, REALGAR.

ARSENIC is a brittle metal, of an iron-grey colour, with a good deal of brilliancy. It may be prepared by triturating arsenious acid, or the white arsenic of commerce, with black flux (charcoal and carbonate of potash), and subliming in a tube. If arsenical pyrites are ignited in close tubes, metallic arsenic sublimes, and sulphuret of iron remains. This metal, when exposed in the air, gradually absorbs oxygen, and falls into a grey powder (suboxide). This is sold on the Continent as *fly powder*.

To prepare arsenic on a larger scale, *mispickel*, or the other ores employed, are pounded; some pieces of old iron are mixed with the ore, to retain the combined sulphur, and the mixture placed in retorts between four and five feet in length, to which receivers are adapted. The retorts are moderately heated by a fire placed beneath them; the ores are decomposed, and metallic arsenic is sublimed and condensed in the receivers. The arsenic obtained in this way is purified by a second distillation with a little charcoal.

Arsenic is used in small quantities in the preparation of several alloys; it is employed in the manufacture of opal glass; also is much used in the manufacture of shot, to which it imparts a certain degree of hardness; and, by preventing the distortion of the falling drops of metal, and thus securing regular globules, the manufacture is greatly facilitated.

ARSENIC ACID. This acid was first produced on a large scale by M. G. Kopp. He employs nitric acid to convert arsenious acid by oxidation into arsenic acid, and

Digitized by Google

by passing the nitrous acid fumes evolved, together with air, over coke moistened with water, he recovers two-thirds or three-fourths of the nitric acid employed. The proportions he adopts are 303 kilogrammes (2 lbs. *and nearly a* ¼ lb. *avoirdupoise each*) of nitric acid of 1·35 sp. gr. to 400 kilogrammes of arsenious acid, and by adding the nitric acid gradually, the oxidizing action may be accomplished without the application of heat.

Arsenic acid is now almost universally employed in the manufacture of *Rosaniline*, and is therefore an article of great consumption. It is also largely used for the white discharge of Turkey Red.

M. Kopp has noticed, that without any injury to the general health, a natural tendency to stoutness was produced whilst working with arsenic acid. In the course of ten weeks, while engaged on experiments with Arsenic acid, M. Kopp himself increased in weight considerably more than twenty pounds, which he lost again when the experiments were concluded. The workpeople engaged in the manufacture of Rosaniline are similarly affected.

ARSENIOUS ACID, *White Arsenic, Flowers of Arsenic.*—This is the white arsenic of commerce, usually called Arsenic. It is obtained in this country from the arsenical ores of iron, tin, &c., and on the Continent from those of cobalt and nickel. It is prepared by heating the ores containing arsenic on the sole of a reverberatory furnace, through which a current of air, after passing through the grate, is allowed to play. The following ores are the more remarkable of this class,—the quantity of arsenic in 100 grains is given in each case.

Mispickel, or arsenical iron - - - - -	42·88
Lölingite, arsenical pyrites - - - - -	65·88
Kupfernickel, arsenical nickel - - - -	54·73
Rammelsbergite, white arsenical nickel - - -	72·64
Smaltine, tin-white cobalt - - - - -	74·22
Safflorite, arsenical cobalt - - - - -	70·37

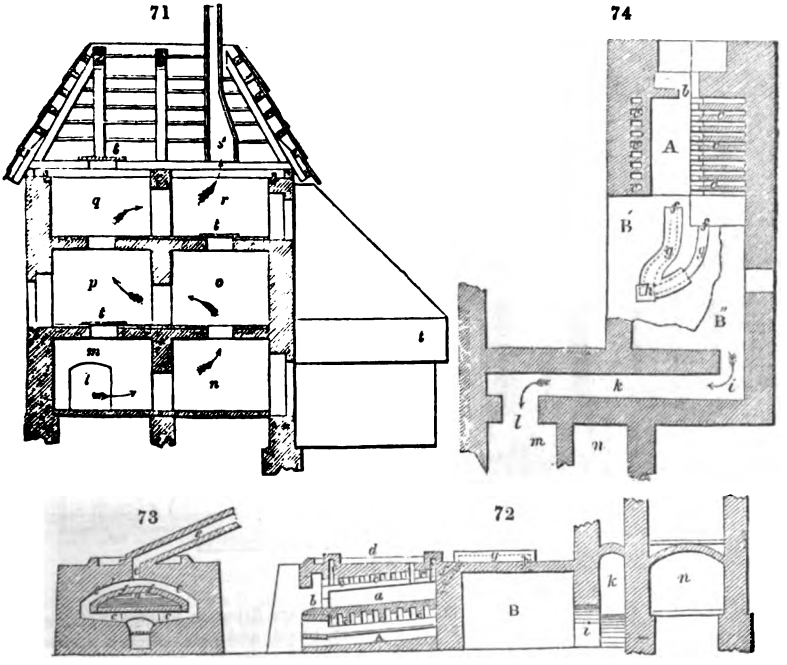

In the roasting of tin ores, a considerable quantity of arsenious acid is collected in the flues leading from the furnaces in which this process is effected.

The extraction of white arsenic from the cobalt ores is performed at Altenberg and

Digitized by Google

Reichenstein, in Silesia, with an apparatus excellently contrived to protect the health of the smelters from the vapours of this metallic sublimate.

Figs. 71 to 74 (p. 195) represent the arsenical furnaces at Altenberg. *Fig.* 71 is a vertical section of the poison tower; *fig.* 72 a longitudinal section of the subliming furnace A, with the adjoining vault B, and the poison tower in part at *n*; *fig.* 73, the transverse section of the furnace A, of *fig.* 72; *fig.* 74 ground plan of the furnace A, where the left half shows the part above, and the right the part below the muffle or oblong retorts; B′ is the upper view, B″ the ground plan of the vault B, of *fig.* 72; *m*, *n*, the base of the poison tower. In the several figures the same letters denote the same objects; *a* is the muffle; *b* is its mouth for turning over the arsenical schlich, or ground ore; *c*, *c*, *c*, fire draughts or flues; *d*, an aperture for charging the muffle with fresh schlich; *e*, the smoke chimney; *f*, two channels or flues for the ascent of the arsenious fumes, which proceed to other two flues *g*, and then terminate both in *h*, which conducts the fumes into the vault B. They issue, by the door, *i*, into the conduit *k*, thence by *l* into the spaces *m*, *n*, *o*, *p*, *q*, *r*, of the tower. The incondensable gases escape by the chimney, *s*. The cover *t* is removed after completion of the process, in order to push down the precipitate into the lower compartments.

The arsenious schlichs, to the amount of 9 or 10 cwt. for one operation (1 *roast-post*, or roasting round), are spread 2 or 3 inches thick upon the bottom of the muffle, heated with a brisk fire to redness, then with a gentler heat, in order to oxidise completely, before subliming, the arsenical ore. With this view the air must have free entrance, and the front aperture of the muffle must be left quite open. After 11 or 12 hours, the calcined materials are raked out by the mouth of the muffle, and fresh ones are introduced by the openings indicated above, which are closed during the sublimation.

The arsenious acid found in these passages is not marketable till it be resublimed in large iron pots, surmounted with a series of sheet-iron drums or cast-iron cylinders, upon the sides of which the arsenic is condensed in its compact glassy form. The top cylinder is furnished with a pipe which terminates in a condensing chamber.

Figs. 75, 76, represent the arsenic refining furnaces at Reichenstein. *Fig.* 75 shows at A, a vertical section of the furnace, the kettle, and the surmounting drums or cylinders; over B it is seen in elevation; *fig.* 76 is a ground plan of the four fire-places. *a* is the grate; *b*, the ash-pit; *c*, the openings for firing; *d*, the fire-place; *e*, iron pots or kettles which are charged with the arsenious powder; *f*, the fire flues proceeding to the common chimney *g*; *h*, iron cylinders; *i*, caps; *k*, pipes leading to the poison-vent *l*; *m*, openings in the pipes for introducing the probing wires.

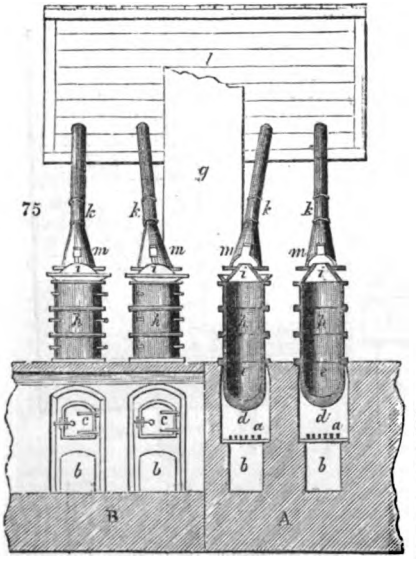

The conduct of the process is as follows:—The pot is filled nearly to

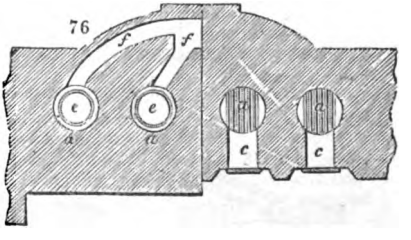

its brim with 3½ cwt. of the arsenic meal; the cylinders are fitted on by means of their handles, and luted together with a mixture of loam, blood, and hair; then is applied first a gentle, and after half an hour, a strong fire, whereby the arsenic is raised partly in the form of a white dust, and partly in crystals; which, by the continuance of the heat, fuse together into a homogeneous mass. If the fire be too feeble, only a sublimate is obtained; but if too violent, much of the arsenic is volatilised into the

Digitized by Google

pipes. The workmen judge by the heat of the cylinders whether the operation be going on well or not. After 12 hours the furnace is allowed to cool, provided the probe wires show that the sublimation is over. The cylinders are then lifted off, and the arsenious glass is detached from their inner surface. According to the quality of the poison-flour, it yields from $\frac{3}{4}$ths to $\frac{7}{8}$ths of its weight of the glass or enamel. Should any dark particles of metallic arsenic be intermixed with the glass, a fresh sublimation must be had recourse to.

In these operations, if any sulphur is present it is converted into sulphurous acid, which escapes through the chimney, while the arsenious acid is condensed in proper chambers, placed in the flues to receive it. Freshly prepared arsenious acid is a perfectly transparent solid mass; but by exposure it becomes transformed into an opaque body resembling porcelain.

White arsenic is extensively used in the preparation of various pigments, as the *bisulphide*, or realgar, the *tersulphide*, or orpiment, and also in the mineral greens used by paper-stainers. It has been stated that papers stained with the arsenical greens are injurious to health. Very much has been said on this subject; but the following remarks by Mr. Alfred Fletcher appear to settle the question:—"Now, it is stated that in a medical work an instance is noted in which injury has been received by those living in rooms decorated with these colours: surely, were the proximity of such materials injurious, it would not be necessary to search in recondite books for the registry of isolated cases. The fact of the large extent to which such materials have always been employed is a sufficient proof that there is no danger attending their use; moreover, workmen who have been daily employed for many years in manufacturing large quantities of these colours, under the necessity of constantly handling them, are in the regular enjoyment of perfect health, though exposed also to the general influences of a chemical factory. Let blame be laid at the right door, and let the public be assured that it is not the looking at cheerful walls, the fingering of brightly ornamented books, nor the wearing of tastefully coloured clothing, that will hurt them, but the dwelling in ill-ventilated rooms."

Arsenite of Copper.—Scheele's green is a combination of arsenious acid with oxide of copper, or an arsenite of copper, and is described under that metal.

Arseniate of Potash is prepared, in the small way, by exposing to a moderate heat, in a crucible, a mixture of equal parts of white arsenic and nitre in powder. After fusion the crucible is to be cooled; the contents being dissolved in hot water, and the solution filtered, will afford regular crystals on cooling. According to M. Berzelius, they are composed of arsenic acid, 63·87; potash, 26·16; and water, 9·97. It is an acidulous salt, and is hence usually called the binarseniate, to denote that its composition is 2 atoms of arsenic acid and 1 of potash. This article is prepared upon the great scale, in Saxony, by melting nitre and arsenious acid together in a cylinder of cast iron. A neutral arseniate also is readily formed by saturating the excess of acid in the above salt with potash; it does not crystallise. The acid arseniate is occasionally used in calico printing, for preventing certain points of the cotton cloth from taking on the mordant; with which view it is mixed up with gum water and pipe clay into a paste, which is applied to such places with a block.

ARSENIC, POISONING BY.—This poison is so commonly the cause of death, by accident and by design, that it is important to name an antidote which has been employed with very great success.

This is the *hydrated peroxide of iron*. This preparation has no action on the system, and it may therefore be administered as largely and as quickly as possible. The following statement will render the action of this hydrated salt intelligible. When hydrated peroxide of iron is mixed in a thin paste with the solution of arsenious acid, this disappears, being changed into arsenic acid (a far less active oxide), and the iron into protoxide $2Fe^2O^2$ and AsO^5, producing $4FeO + As^2O^5$. The hydrated peroxide of iron may be made in a few minutes by adding carbonate of soda to any salt of the red oxide of iron (permuriate, muriate, acetate, &c.). It need not be washed, as the liquor contains only a salt of soda, which would be, if not beneficial, certainly not injurious.—*Kane.*

Detection of Arsenic in Cases of Poisoning.

Arsenious acid, which is almost always the form in which the arsenic has entered the system, possesses the power of preventing the putrefaction of animal substances; and hence the bodies of persons that have been poisoned by it do not readily putrefy. The arsenious acid combines with the fatty and albuminous tissues to form solid compounds, which are not susceptible of alteration under ordinary circumstances. It hence has frequently occurred that the bodies of persons poisoned by arsenic have been found, long after death, scarcely at all decomposed; and even where the

Digitized by Google

general mass of the body had completely disappeared, the stomach and intestines had remained preserved by the arsenious acid which had combined with them, and by its detection the crimes committed many years before have been brought to light and punished. — *Kane.*

The presence of arsenic may be determined by one of the following methods: —

1. Portions of the contents of the stomach or bowels being gently heated in a glass tube, open at both ends, the arsenic, if in any quantity, will be sublimed, and collected as minute brilliant octahedrons.

2. Or by the presence of organic matter; if the ignition is effected in a tube closed at one end, metallic arsenic sublimes, forming a steel-grey coat, and emitting a strong smell of garlic.

3. *Ammonia Nitrate of Silver* produces a canary-yellow precipitate from a solution of arsenious acid (*arsenite of silver*). The phosphate of soda produces a yellow precipitate of tribasic phosphate of silver, which exactly resembles the arsenite. The phosphate is, however, the more soluble in ammonia, and when heated gives no volatile product; while the arsenite is decomposed with white arsenic and oxygen, leaving metallic silver behind.

4. *Ammonia Sulphate of Copper* produces a fine apple-green precipitate, which is dissolved in an excess of either acid or ammonia. It is, however, uncertain, unless the precipitate be dried and reduced.

5. *The Reduction Test.*—Any portion of the suspected matter, being dried, is mixed with equal parts of cyanide of potassium and carbonate of potash, both dry. This mixture is to be introduced into a tube terminating in a bulb, to which heat is applied, when metallic arsenic sublimes.

6. *Marsh's Test.*—This is one of the most delicate and useful of tests for this poison, and when performed with due care there is little liability to error. The liquid contents of the stomach, or any solution obtained by boiling the contents, is freed as much as possible from animal matter by any of the well known methods for doing so. This fluid is then rendered moderately acid by sulphuric acid, and introduced into a bottle properly arranged.

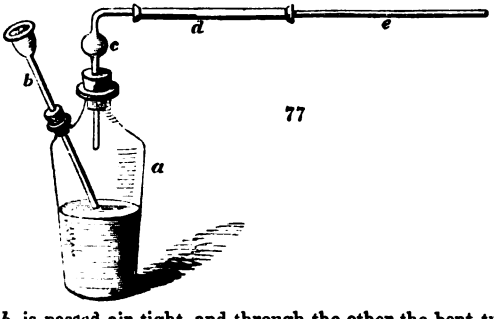

77

Fig. 77 is the best form for Marsh's apparatus:— *a* is a bottle capable of holding half, or, at most, a pint. Both necks are fitted with new perforated corks, which must be perfectly tight. Through one of these the funnel tube, *b*, is passed air-tight, and through the other the bent tube, *c*, which is expanded at *e* into a bulb about an inch in diameter. This bulb serves to collect the particles of liquid which are thrown up from the contents of the bottle, and which drop again into the latter from the end of the tube. The other end of the tube is connected, by means of a cork, with tube *d*, about six inches long, which is filled with fused chloride of calcium, free from powder, destined to retain the moisture. In the opposite end of the tube *d* is fixed, air-tight, another tube, *e*, made of glass free from lead, 12 inches long, and, at most, $\frac{1}{9}$th of an inch in internal diameter. It must be observed that the funnel tube *d* is indispensably necessary to introduce the fluid to the pieces of perfectly pure metallic zinc already placed in the bottle. Hydrogen gas is at once formed, and if arsenic is present, in even the smallest quantity, it combines with the hydrogen, and (*gaseous arseniuretted hydrogen*) escapes. If the gas as it issues from the jet is set on fire, no product but water is generated if the hydrogen is pure; and by holding against the flame a cold white porcelain basin, or piece of glass, or of mica, no steam is produced, and a dew is formed upon the cold surface. If arsenic be present, a deposit is obtained, which, according to the part of the flame in which the substance to receive it is placed, will be either a brown stain of metallic arsenic, or a white one of arsenious acid. If the quantity of arsenic is too small to be detected in this way, it will be well to ignite the horizontal part of the tube. All the arseniuretted hydrogen will, in passing that point, become decomposed, and deposit its arsenic. The heat will drive this forward, and a little beyond the heated portion metallic arsenic will be condensed. Several precautions are necessary to be observed; but for the details of those we must refer to works especially directed to the consideration of this subject. One source of error must, however, be alluded to. A compound of antimony and hydrogen is formed under similar circumstances; and this

Digitized by Google

gas in many respects resembles the compound of arsenic and hydrogen. If the stain formed by the flame is arsenic, it will dissolve, when heated, in a drop or two of sulpho-hydride of ammonia, and a lemon-yellow spot is left; if antimony is present, it leaves a yellow stain.— *Wöhler.*

If a drop of bromine is placed on a saucer, and a capsule containing arsenical spots inverted over it, the spots take a very bright lemon-yellow tinge in a short time. Antimonial spots, under the same circumstances, are acted on much more rapidly (in about five seconds at a temperature of 52° F.), and assume an orange shade. Both become colourless if exposed to the air, and are again restored if treated with a strong solution of sulphuretted hydrogen. The secondary yellow of the arsenical spots, as observed by Lassaigne, disappears on the addition of ammonia, whilst that of antimonial spots remains untouched. A concentrated solution of iodate of potash turns arsenical spots of a cinnamon-red and dissolves them almost immediately. On antimonial spots it has no visible action within three or four hours. Solutions of the hypochlorites (chlorides) of soda and lime and chlorine water dissolve arsenical spots instantaneously, leaving those of antimony. A concentrated solution of the chlorate of potash gradually acts upon arsenical spots, but not upon those of antimony. The nitroprusside of potassium, on the other hand, slowly dissolves antimony, producing no perceptible effect upon arsenic. The statement of Bischoff, that arsenical spots were soluble, antimonial insolnble, in a solution of the chloride of sodium, could not be verified, as, after repeated trials, it was found to leave both not perceptibly affected. The chlorine of barium, the hypochlorate and the sulphite of ammonia, afforded likewise no distinguishing action. The nitrate of ammonia dissolves arsenical more rapidly than antimonial stains. Of these reactions the most decisive are those of iodate of potash, hypochlorites of soda and lime, and fresh chlorine water.

It is well known that fluids mixed with glutinous matter are very liable to froth up when hydrogen is disengaged in them, from the mutual action of zinc and a dilute acid; and that the froth obstructs the due performance of the experiment of Marsh. A committee appointed by the Prussian Government contrived an ingenious modification of Marsh's apparatus, the annexed form (*fig.* 78) representing an ingenious simplification of it by Dr. Ure:—A, is a narrow glass cylinder, open at top, about 10 inches high, and 1¼ or 1½ inch diameter inside; B is a glass tube, about 1 inch diameter outside, drawn to a point at bottom, and shut with a cork at top. Through the centre of this cork the small tube C passes down air-tight, and is furnished at top with a stopcock, into which the bent small tube of glass (without lead) E is cemented. The bent tube F is joined to the end of E with a collar of caoutchouc, or a perforated cork, which will be found more convenient.

78

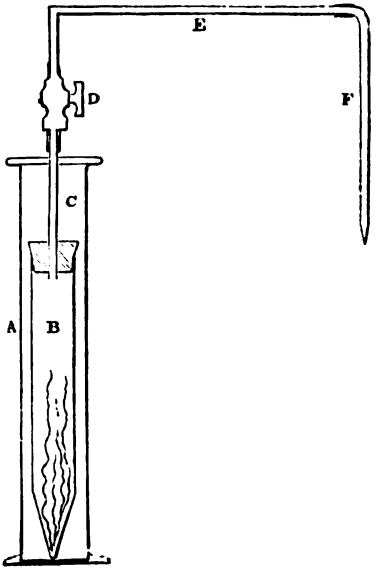

The manner of using this apparatus is as follows:—Introduce a few oblong slips of zinc, free from arsenic, into B, and then insert its air-tight cork with the attached tubes. Having opened the stopcock, pour into A as much of the suspected liquid, acidulated with dilute hydrochloric or sulphuric acid (each pure) as will rise to the top of the cork, after B is full, and immediately shut the stopcock. The generated hydrogen will force down the liquid out of the lower orifice of B into A, and raise the level of it above the cork. The extremity of the tube F being dipped beneath the surface of a weak solution of nitrate of silver, and a spirit-flame being placed a little to the left of the letter E, the stopcock is then to be slightly opened, so that the gas which now fills the tube B may escape so slowly as to pass off in separate small bubbles through the silver solution. By this means the whole of the arsenic contained in the arseniuretted hydrogen will be deposited either in the metallic state upon the inside of the tube E, or with the silver into the characteristic black powder. The first charge of gas in B being expended, the stopcock is to be shut till the liquid be again expelled from it by a fresh disengagement of hydrogen.

Digitized by Google

The ring of metallic arsenic deposited beyond E may be chased onwards by placing a second flame under it, and thereby formed into an oblong brilliant steel-like mirror. It is evident that by the patient use of this apparatus the whole arsenic in any poisonous liquid may be collected, weighed, and subjected to every kind of chemical verification. If F be joined to E by means of a perforated cork, it may readily be turned about, and its taper point raised into a position such as when the hydrogen issuing from it is kindled, the flame may be made to play upon a surface of glass or porcelain, in order to produce the arsenical mirror.

7. *Reinsch's Test.* — Professor Reinsch has proposed an entirely new method of detecting arsenic, which consists in acidulating any suspected fluid with hydrochloric acid, heating in it a thin plate of bright copper, upon which the arsenic is deposited in the form of a thin metallic crust, and then separating the arsenic from the copper in the state of oxide by subjecting the copper to a low red heat in a glass tube. Organic fluids and solids suspected to contain arsenic, may be prepared for this purpose by boiling them for half an hour with a little hydrochloric acid; solid matters being cut into small shreds, water being added in sufficient quantity to let the ebullition go on quietly, and care being taken to continue the boiling until the solids are either dissolved, as generally happens, or are reduced to a state of minute division.

The method of Reinsch is exceedingly delicate, for it is adequate to detect a 250,000th part of arsenic in a fluid. It is also perfect in another respect: it does not leave any arsenic in the subject of analysis; none, at least, which can be detected by any other means, even by the most delicate process yet proposed, that of Mr. Marsh.

Cut the copper on which the arsenic is deposited into small chips, so that they may be easily packed in the bottom of a small glass tube, and apply a low red heat. A white crystalline powder sublimes; and if this be examined in the sunshine, or with a candle near it, a magnifier of four or five powers will enable the observer to distinguish the equilateral triangles composing the facets of the octahedral crystals, which are formed by arsenious acid when it sublimes. Sometimes the three equal angles, composing a corner of the octahedron, may be seen by turning the glass in various directions. If triangular facets cannot be distinguished, owing to the minuteness of the crystals, then shake out the copper chips, close the open end of the tube with the finger, and heat the sublimed powder over a very minute spirit-lamp flame, chasing it up and down the tube till crystals of adequate size are formed. Next boil a little distilled water in the tube over the part where the crystalline powder is collected; and when the solution is cold, divide it into three parts, to be tested with ammoniacal nitrate of silver, ammoniacal sulphate of copper, and sulphuretted hydrogen, either in the state of gas or dissolved in water.

8. *Fleitmann's Test.* — If a solution containing arsenic be mixed with a large excess of concentrated solution of potassa, and boiled with fragments of granulated zinc, arseniuretted hydrogen is evolved, and may be easily reorganised by allowing it to pass on to a piece of filter paper spotted over with solution of nitrate of silver. These spots assume a purplish-black colour, even when a small quantity of arsenic is present. This experiment may be performed in a small flask, furnished with a perforated cork carrying a piece of glass tube of about ¼ inch diameter. It will be observed that this test serves to distinguish arsenic from antimony.

The following remarks on the *Toxicological Discovery of Arsenic* deserve attention:—

This active and easily administered poison is fortunately one of those most easily and certainly discovered; but the processes require great precaution to prevent mistaken inferences: if due care is taken, arsenic can be found after any lapse of time, as well as after the most complete putrefaction of the animal remains. The longest time after which it has been discovered by myself is eight years, which was the case of an infant; nothing but the bones of the skeleton remained, the coffin was full of earth, and large roots of a tree had grown through it. The metal was obtained from the bones, and in the earth immediately below where the stomach had existed. Many cases have occurred in my experience, where one, two, three, four, and five years have elapsed; in one case, after fourteen months, where the body of a boy had been floating in a coffin full of water. The poison is given in one of three states, white arsenious acid, yellow sulphuret ("orpiment"), or "realgar," red sulphuret of arsenic; and it is worthy of notice that putrefaction will turn either white or red into yellow, but will never turn yellow into either white or red; this is owing to the hydrosulphuret of ammonia disengaged during decomposition.

Modern toxicologists have abandoned all the old processes for the detection of this poison, and have adopted one of two, which have been found more expeditious, as well as more certain. The first was proposed by Marsh, of Woolwich: it is founded upon the principle that nascent hydrogen will absorb and carry off any arsenic which may

Digitized by Google

be present, as arseniuretted hydrogen; but as I prefer the principle first proposed by Reinsch, and have always acted upon it, I shall confine my description to the processes founded upon it. The principle is this: arsenic mixed or combined with any organic matter will, if boiled with pure hydrochloric acid and metallic copper, be deposited upon the copper; but as this depositing property is also possessed by mercury, antimony, bismuth, lead, and tellurium, subsequent operations are required to discriminate between the deposits. I take pieces of copper wire, about No. 13 size, and 2½ inches long; these I hammer on a polished plane with a polished hammer, for half their length (*fig.* 79), and having brought the suspected matters to a state of dryness, and boiled the copper blade in the pure hydrochloric acid, to prove that it contains no metal capable of depositing, I introduce a portion of the suspected matter and continue the boiling; if the copper becomes now either steel-grey, blue, or black, I remove it, and wash it free of grease in another vessel in which there is hot diluted hydrochloric acid; I now dry it, and, with a scraper with a fine edge, take off the deposit with some of the adhering copper, and repeat the boiling, washing, and scraping, so as to have four or five specimens on copper; one of these is sealed up hermetically in a tube for future production. I now take a piece of glass tube, and having heated it in the middle, draw it out, as in *fig.* 80, dividing it at A, each section being about 2 inches long, the wide orifices being about $\frac{1}{10}$ths of an inch in diameter, and ½ an inch long, the capillary part $\frac{1}{8}$th of an inch in diameter and 1½ inch long; now, by putting one portion of the scrapings into one of the tubes at B, and holding it upwards over a very small flame, so that the volatile products may slowly ascend into the narrow portion of the tube, we prove the nature of the deposit: if mercury, it condenses in minute white shining globules; if lead or bismuth, it does not rise but melts into a yellowish glass, which adheres to the copper; if tellurium, it would fall as a white amorphous powder; if antimony, it would not rise at that low temperature; but arsenious acid condenses as minute octahedral crystals, looking with the microscope like very transparent grains of sand. I make three such sublimates, one of which is sealed up like the arsenic for future production. I now cut the capillary part of another of the tubes in pieces, and boil it in a few drops (say 10) of distilled water, and when cold drop three or four drops on a plate of white porcelain, and with a glass rod drop one drop of ammoniacal sulphate of copper in it: and now to make the colours from this and the next test more conspicuous, I keep a chalk stone, planed and cleaned, in readiness, and placing on it a bit of clean white filtering paper, I conduct the drops of copper test upon the paper, which permits the excess of copper solution to pass through into the chalk, but retains the smallest proportion of Scheele's green; the other few drops of the solution are treated the same way with the ammoniacal nitrate of silver. When I get the yellow precipitate of arsenite of silver, the papers, with these two spots, are now dried and sealed up in a tube as before, and that with the silver must be kept in the dark, or it will become black. I have still one of the tubes with the arsenical sublimate remaining; through this I direct a stream of hydrosulphuric acid gas for a few seconds, which converts the sublimate into yellow orpiment. I have now all five tests: the metal, the acid, arsenite of copper, arsenite of silver, and yellow sulphuret; and the $\frac{1}{100000}$th of a grain of arsenic is sufficient in adroit hands to produce the whole; but all five must be present, or there is no positive proof, for many matters will cause a darkness of the copper in the absence of arsenic,—sulphurets even from putrefaction;—but there is no sublimate in the second operation, because the sulphur burns into sulphurous acid and passes off upwards. Corn, grasses, and earth slightly darken it from some unknown cause, but produce no sublimate; so, if the solution of suspected arsenious acid is tested with the copper test while hot, it will produce a greenish deposit of oxide of copper, through the heat dissipating a little ammonia, or if the copper blade has not been deprived of grease by the diluted hydrochloric acid, the sublimed acid from the grease will precipitate copper from that test; but as much of the sulphuric acid of commerce, and nearly all such hydrochloric acid and some commercial zinc contains arsenic, nothing can excuse a toxicologist who attempts to try for arsenic if he has not previously experimented with all his reagents before he introduces the suspected matters. I should also mention that this metal is to be found in all parts of the body, but longest, and in greatest quantity, in the liver, where it is frequently found many days after it has disappeared from the intestines. — *W. Herapath.*

79

80

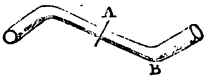

Arsenious acid of commerce is frequently adulterated with chalk or plaster of Paris. These impurities are very easily detected, and their proportions estimated. Arsenious acid is entirely volatilised by heat, consequently it is sufficient to expose a weighed quantity of the substance to a temperature of about 400° F. in a capsule or

Digitized by Google

crucible. The whole of the arsenic will pass off in fumes, while the impurities will be left behind as a fixed residuum, which can, upon cooling, be weighed.

The mines of Cornwall and Devonshire produced in 1863, 1,444 tons of Arsenic, of the value of £1,200, and in 1864, 1,858 tons, valued at £1,393 10*s.*

Our *Imports* and *Exports* of ARSENIC were as follows:—

	Imports.	Exports.
1863 - - - - -	216 cwts.	31,896 cwts.
1864 - - - - -	84 „	19,660 „

ARTESIAN WELLS. Under this name is designated a cylindrical perforation, bored vertically down through one or more of the strata of the earth, till it passes into a porous gravel bed containing water, placed under such incumbent pressure as to make the fluid rise through the perforation, either to the surface or to a height convenient for the operation of a pump. In the first case, these wells are called spouting or overflowing. These wells derive their name from Artois, one of the provinces of France, in the *département du pas de Calais*, where the practice of employing them was revived. They have been used for a long period in the East and in Italy.

M. Lefebvre, "Comptes Rendus de l'Acad. des Sciences, 1838," describes several very ancient Artesian wells, which were discovered by M. Ayme in the Oasis of Thebes. These appear to have been sunk through 80 feet of clay and marls, and then through 300 feet of limestone. M. Ayme states that in the Lybian desert, where there are no rivers or springs, and upon which rain never falls, formerly a large population was supplied with water by Artesian wells, several of which have been cleared out and restored by this French engineer with perfect success. The "Wells of Solomon" in the plains of Tyre are supposed to be of this description. There are now many such wells in London and its neighbourhood, perforated through the immensely thick bed of the London clay, and even through some portions of the subjacent chalk.

The formation of Artesian wells depends on two things, essentially distinct from each other: 1, On an acquaintance with the physical constitution of the rocks forming the district of any country and their relative situations, in the locality where the water supply is required, and in those distant spots from which the water is expected to be derived; and, 2, On the skilful direction of the processes by which we can reach the water level, and of those by which we can promote its ascent in the tube.

The operations employed for penetrating the soil are entirely similar to those daily practised by the miner; but the well excavator must resort to peculiar expedients to prevent the purer water, which comes from deep strata, mingling with the cruder waters of the alluvial beds near the surface of the ground, as also to prevent the small perforation getting eventually filled with rubbish.

The cause of overflowing wells has been ascribed to a variety of circumstances. But, as it is now generally admitted that the numerous springs which issue from the ground proceed from the infiltration of the waters progressively condensed in rain, dew, snow, &c. upon the surface of our globe, the theory of these interior streamlets becomes by no means intricate; being analogous to that of syphons and water jets, as expounded in treatises of physics. The waters are diffused, after condensation, upon the surface of the soil, and percolate downwards, through the various pores and fissures of the geological strata, to be again united subterraneously in veins, rills, streamlets, or expanded films, of greater or less magnitude or regularity. The beds traversed by numerous disjunctions will give occasion to numerous interior currents in all directions, which cannot be recovered and brought to the day; but when the ground is composed of strata of sand, or gravel very permeable to water, separated by other strata nearly impervious to it, reservoirs are formed to our hand, from which an abundant supply of water may be spontaneously raised. In this case, as soon as the upper stratum is perforated, the waters may rise, in consequence of the hydrostatic pressure upon the lower strata, and even overflow the surface in a constant stream, provided the level from which they proceed be proportionally higher.

The sheets of water occur principally at the separation of two contiguous formations; and, if the succession of the geological strata be considered, this distribution of the water will be seen to be its necessary consequence. In fact, the lower beds are frequently composed of compact sandstone or limestone, and the upper beds of clay. In level countries, the formations being almost always in horizontal beds, the waters which feed the Artesian wells must come from districts somewhat remote, where the strata are more elevated, as towards the second and transition rocks. The copious streams condensed upon the sides of these colder lands may be therefore regarded as the proper reservoirs of our wells.

Fig. 81 represents the manner in which the condensed water of the heavens may be supposed to distribute itself upon a portion of the surface of our globe. Here we have a geological section, showing the succession of the several formations.

Digitized by Google

The figure is supposed to represent two beds, A, B, more porous and consequently more absorbent than the rocks with which they are interstratified. The dews condensed and rains falling upon the distant hills pass rapidly by the outcrops of these strata to the lower levels, until the whole mass becomes thoroughly saturated with water. Supposing two such beds as are represented in the section to exist fully charged with water, it is evident that if we sank "bore-holes" through the rocks down to them, as represented at C, D, the water would rise through those wells, and jet out to such a height above the surface as is due to the height of the hills from which the water has been obtained. The fountain derived from B would necessarily flow as much higher than that derived from the bed A, as is the height of B above A.

81

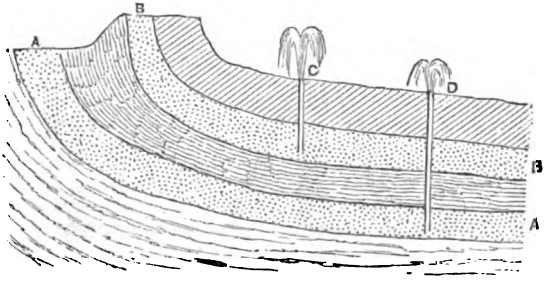

The annexed section (*fig.* 82) is an actual one of the country from Sussex to Bedfordshire, as given by Mr. Prestwich. In this drawing the lower stratum is the *Kimmeridge and Weald clay*, G, which is impermeable; upon this rests the *lower greensand*, F, which is permeable, and probably highly charged with water; the *gault*, E, above, which is impermeable; then we have the *upper greensand*, D, *chalk*, C, *sands and mottled clay*, B, *London clay* and *Bagshot sands*, A, all of which are more or less permeable, except the *London clay*.

The line of Trinity high-water mark crosses the section, and it will be understood, confining our attention to the lower greensand only, that if a well is sunk from London through the upper strata to the greensand, that the water will rise through that open-

82

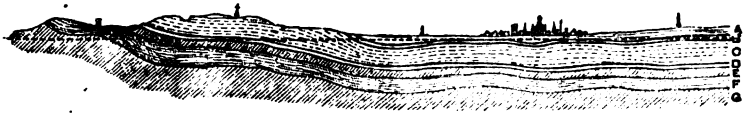

ing, and spout out above the surface, so long as the water in the greensand basin is supported at a height above the Trinity mark.

For exact information of the details of constructing Artesian wells, the reader is referred to "Traité sur les Puits Artésiens," by M. Garnier, and to "Considérations Géologiques et Physiques sur la Théorie des Puits forés, ou Fontaines Artésiennes," by M. le Vicomte Hericart de Thury, and to "Rudimentary Treatise on Well-Digging, Boring," &c., by Mr. J. G. Swindell. The following description given by the late Dr. Ure is valuable, and is consequently preserved, with very slight alterations, although we consider it scarcely in place in a dictionary which does not profess to deal with practical engineering.

The situation of the intended well being determined upon, a circular hole is generally dug in the ground, about 6 or 8 feet deep, and 5 or 6 feet wide. In the centre of this hole the boring is carried on by two workmen below, assisted by a labourer above, as shown in *fig.* 83.

The handle (*fig.* 84) having a female screw in the bottom of its iron shank, with a wooden bar or rail passing through the socket of the shank, and a ring at top, is the general agent to which all the boring implements are to be attached. A chisel (*fig.* 85) is first employed, and connected to this handle by its screw at top. If the ground is tolerably soft, the weight of the two workmen bearing upon the crossbar, and occasionally forcing it round, will soon cause the chisel to penetrate; but if the ground is hard or strong, the workmen strike the chisel down with repeated blows, so as to peck their way, often changing their situation by walking round, which breaks the stones, or other hard substances, that may happen to obstruct its progress.

The labour is very considerably reduced by means of an elastic wooden pole, placed horizontally over the well, from which a chain is brought down, and attached to the ring of the handle. This pole is usually made fast at one end, as a fulcrum, by being set into a heap of heavy loose stones; at the other end the labourer above gives it a

Digitized by Google

slight up and down vibrating motion, corresponding to the beating motion of the workmen below, by which means the elasticity of the pole in rising lifts the handle

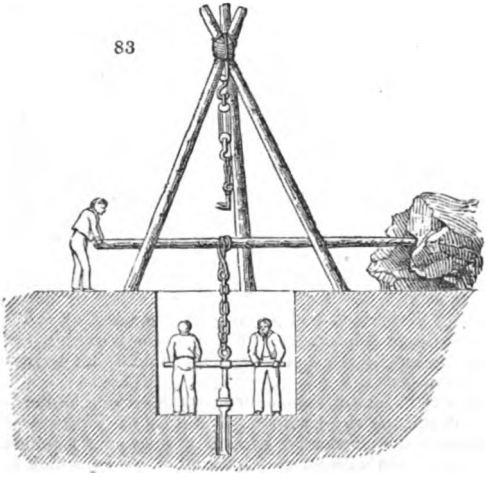

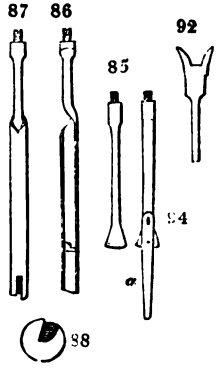

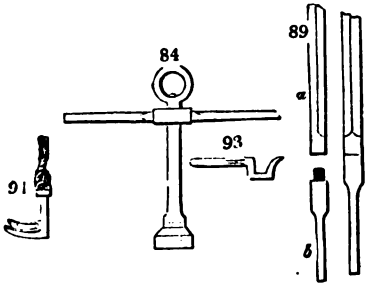

and pecker, and thereby very considerably diminishes the labour of the workmen. See *fig.* 83.

When the hole has been thus opened by a chisel, as far as its length will permit, the chisel is withdrawn, and a sort of a cylindrical auger (*fig.* 86) attached to the handle (*fig.* 84), for the purpose of drawing up the dirt or broken stones which have been disturbed by the chisel. A section of this auger is shown in *fig.* 87, by which the internal valve will be seen. The auger being introduced into the hole and turned round by the workman, the dirt or broken stones will pass through the aperture at bottom (shown at *fig.* 88), and fill the cylinder, which is then drawn up and discharged at the top of the auger, the valve preventing its escape at bottom.

In order to penetrate deeper into the ground, an iron rod, as *a* (*fig.* 89) is now to be attached to the chisel (*fig.* 85) by screwing on to its upper end, and the rod is also fastened to the handle (*fig.* 84) by screwing into its socket. The chisel, having thus become lengthened by the addition of the rod, is again introduced into the hole; and the operation of pecking, or forcing it down, is carried on by the workmen as before. When the ground has been thus perforated as far as the chisel and its rod will reach, they must be withdrawn in order again to introduce the auger (*fig.* 86) to collect and bring up the rubbish; which is done by attaching it to the iron rod in place of the chisel. Thus as the hole becomes deepened, other lengths of iron rods are added, by connecting them together, as *a b* are in *fig.* 90. The necessity of frequently withdrawing the rods from the holes, in order to collect the mud, stones, or rubbish, and the great friction produced by the rubbing of the tools against its sides, as well as the lengths of rods augmenting in the progress of the operation, sometimes to the extent of several hundred feet, render it extremely inconvenient, if not impossible, to raise them by hand. A tripedal standard is therefore generally constructed by three scaffolding poles tied together over the hole (as shown *fig.* 83), from the centre of which a wheel and axle, or a pair of pulley-blocks, is suspended for the purpose of hauling up the rods, and from which hangs the fork (*fig.* 91.) This fork is to be brought down under the shoulder, near the top of each rod, and made fast to it by passing a pin through two little holes in the claws. The rods are thus drawn up, about seven feet at a time, which is the usual distance between each joint, and at every haul a fork (*fig.* 92) is laid horizontally over the hole, with the shoulders of the lower rod resting between its claws, by which means the rods are prevented from sinking down into the hole again, while the upper length is unscrewed and removed. In attaching and detaching these lengths

Digitized by Google

of rod, a wrench (*fig.* 93) is employed by which they are turned round, and the screws forced up to their firm bearing.

The boring is sometimes performed for the first sixty or a hundred feet by a chisel of 2¼ inches wide, and cleared out by a gouge of 2¼ diameter, and then the hole is widened by a tool such as is shown at *fig.* 94. This is merely a chisel (as *fig.* 85) four inches wide, but with a guide, *a*, put on at its lower part, for the purpose of keeping it in a perpendicular direction; the lower part is not intended to peck, but to pass down the hole previously made, while the sides of the chisel operate in enlarging the hole to four inches. The process, however, is generally performed at one operation, by a chisel of four inches wide (as *fig.* 85), and a gouge of three inches and three-quarters (as *fig.* 86).

It is obvious, that placing and displacing the lengths of rod, which is done every time that the auger is required to be introduced or withdrawn, must of itself be extremely troublesome, independent of the labour of boring, but yet the operation proceeds, when no unpropitious circumstances attend it, with a facility almost incredible. Sometimes, however, rocks which require great labour to penetrate intercept the way; but this is always affected by pecking, which slowly pulverises the stone. The most unpleasant circumstance attendant upon this business is the occasional breaking of a rod in the hole, which sometimes creates a delay of many days, and an incalculable labour in drawing up the lower portion.

When the water is obtained in such quantities and of such quality as may be required, the hole is dressed or finished by passing down it a diamond chisel, funnel-mouthed, with a triangular bit in its centre; this makes the sides smooth previous to putting in the pipe. This chisel is attached to rods and to the handle, as before described; and, in its descent the workmen continually walk round, by which the hole is made smooth and cylindrical.

In order to keep the water which we desire to obtain pure, and uncontaminated with mineral springs, or by surface drainage contaminated with organic matter, which would pass into the hole through the permeable strata near the surface, the hole is cased, for a considerable depth, with a metallic pipe, about a quarter of an inch smaller than the bore. This is generally made of tin (though sometimes of copper or lead), in convenient lengths; and, as each length is let down, it is held by a shoulder resting in a fork, while another length is soldered to it; by which means a continuous pipe is carried through the bore, as far as may be found necessary, to exclude land springs, and to prevent loose earth or sand from falling in and choking the aperture.

It sometimes happens, in sinking Artesian wells, that one or more lines of water may be tapped which it is desirable to avoid. To prevent the mixture of good and bad water, the diameter of the boring is increased from the surface to the bed, or the instertices between the strata, and a hollow cylinder is passed down through its centre to the continuation of the boring beneath the line of bad water, in such a manner that it cannot mix with the good water coming from below. Thus the bad water, rising, ascends on the outside of the cylinder, while the good water rises within it.

Mr. John Good, of Tottenham, who has been extensively employed in boring the earth for water, obtained a patent, in August, 1823, for certain improved implements contrived by him to facilitate his useful labours; a description of which cannot fail to be interesting.

The figures annexed exhibit these ingenious tools; *fig.* 95 is an auger, to be connected by the screw-head to the length of rods by which the boring is carried on. This auger is for boring in soft clay or sand; it is cylindrical, and has a slit or opening from end to end, and a bit or cutting-piece at bottom. When the earth is loose or wet, an auger of the same form is to be employed, but the slit or opening reduced in width, or even without a slit or opening. A similar auger is used for cutting through chalk; but the point or bit at bottom should then project lower, and, for that purpose, some of these cylindrical augers are made with movable bits, to be attached by screws, which is extremely desirable in grinding them to cutting edges. *Fig.* 96 is a hollow conical auger, for boring loose sandy soils; it has a spiral cutting edge coiled round it, which, as it turns, causes the loose soil to ascend the inclined plane, and deposit itself in the hollow within. *Fig.* 97 is a hollow cylinder or tube, shown in section, with a foot-valve, and a bucket to be raised by a rod and cord attached at the top; this is a pumping tool for the purpose of getting up water and sand that would not rise by the auger. When this cylinder is lowered to the bottom of the bore, the bucket is lifted up by the rod and cord, and

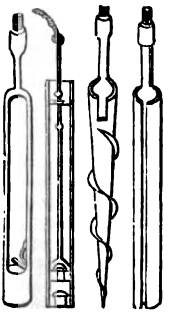

Digitized by Google

descends again by its own gravity, having a valve in the bucket, opening upwards, like other lift-pumps, which, at every stroke, raises a quantity of water and sand in the cylinder equal to the stroke; the ascent and descent of the bucket being limited by a guide-piece at the top of the cylinder, and two small knobs upon the rod, which stop against the cross-guide. *Fig.* 98 is a tool for getting up broken rods. It consists of a small cylindrical piece at bottom, which the broken rod slips through when it is lowered, and a small catch with a knife-edge, acted upon by a back-spring. In rising, the tool takes hold of the broken rod, and thereby enables the workmen at top to draw it up. Another tool for the same purpose is shown at *fig.* 99, which is like a pair of tongs; it is intended to be slidden down the bore, and for the broken rod to pass between the two catches, which, pressed by back-springs, will, when drawn up, take fast hold of the broken rod.

Fig. 100 is a tool for widening the hole, to be connected, like all the others, to the end of the length of rods passed down the bore; this tool has two cutting-pieces extending on the sides at bottom, by which, as the tool is turned round in the bore, the earth is peeled away. *Fig.* 101 is a chisel, or punch, with a projecting piece to be used for penetrating through stone; this chisel is, by rising and falling, made to peck the stone, and pulverise it; the small middle part breaking it away first, and afterwards the broad part coming into action. *Fig.* 102 is another chisel, or punching tool, twisted on its cutting edge, which breaks away the greater portion of the stone as it beats against it.

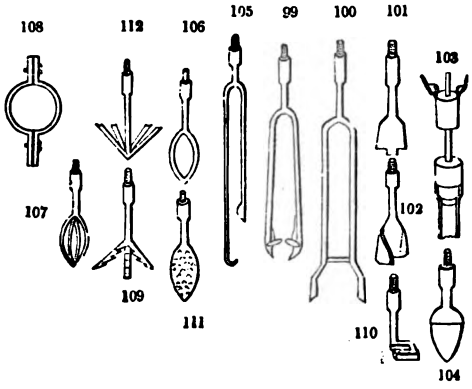

The manner of forcing down lengths of cast-iron pipe, after the bore is formed, is shown at *fig.* 103; the pipe is seen below in the socket, at the end of which a block is inserted; and from this block a rod extends upwards, upon which a weight at top slides. To this weight cords are shown to be attached, reaching to the top of the bore; where the workmen alternately raise the weight and let it fall, which, by striking upon the block in its middle, beats down the pipe by a succession of strokes; and when one length of pipe has, by these means, been forced down, another length is introduced into the socket of the former. Another tool for the same purpose is shown at *fig.* 104, which is formed like an acorn; the raised part of the acorn strikes against the edge of the pipe, and by that means it is forced down the bore. When it happens that an auger breaks in the hole, a tool similar to that shown at *fig.* 105 is introduced; on one side of this tool a curved piece is attached, for the purpose of a guide, to conduct it past the cylindrical auger; and at the end of the other side is a hook, which, taking hold of the bottom edge of the auger, enables it to be drawn up.

Wrought iron, copper, tin, and lead pipes are occasionally used for lining the bore; and as these are subject to bends and bruises, it is necessary to introduce tools for the purpose of straightening their sides. One of these tools is shown at *fig.* 106, which is a bow, and is to be passed down the inside of the pipe, in order to press out any dents. Another tool for the same purpose is shown at *fig.* 107, which is a double bow, and may be turned round in the pipe for the purpose of straightening it all the way down; at *fig.* 108 is a pair of clamps, for turning the pipe round in the hole while driving.

When loose stones lie at the bottom of the hole which are too large to be brought up by the cylindrical auger, and cannot be conveniently broken, then it is proposed to introduce a triangular claw, as *fig.* 109, the internal notches of which take hold of the stone, and, as the tool rises, bring it up. For raising broken rods, a tool like *fig.* 110, is sometimes employed, which has an angular claw that slips under the shoulder of the rod, and holds it fast while drawing up.

In raising pipes, it is necessary to introduce a tool into the inside of the pipe, by which it will be held fast. *Fig.* 111 is a pine-apple tool for this purpose; its surface is cut like a rasp, which passes easily down into the pipe, but catches it as it is drawn up; and by that means brings the pipe with it. *Fig.* 112 is a spear for the same pur-

Digitized by Google

pose, which easily enters the pipe by springing; at the ends of its prongs there are forks, which stick into the metal as it is drawn up, and thereby raise it.

These are the new implements for which the patent was granted. In the process of the boring, there does not appear to be anything new proposed; but that these several tools are to be employed for boring, pecking, and otherwise penetrating, raising the earth, and extracting broken or injured tools. There are also suggestions for employing long buckets, with valves opening upward in their bottoms, for the purpose of drawing water from these wells when the water will not flow over the surface; also lift pumps with a succession of buckets for the same purpose. But as these suggestions possess little if any novelty, it cannot be intended to claim them as parts of the patent.

The so-called primary formations are seldom favourable to the construction of Artesian wells, on account of the compact massiveness of their rocks, and of the rarity of filtering strata overlying retentive ones. It is therefore vain to attempt the formation of an overflowing spring, upon the above principles, in territories of granite, gneiss, mountain limestone, and basalt. The hot springs which burst out of the ground in primary districts come undoubtedly from a great depth under the surface, and derive their heat, and also probably their waters, from an exalted subterranean temperature; but it would not be practical to bore to such extreme depths as would be necessary in these rocks. A miniature representation of such springs is exhibited in the intermitting fountains of fresh water on the shoulder of Vesuvius.

The most remarkable example of an Artesian well is that at the *abattoir* of Grenelle, a suburb of the south-west of Paris, where there was a great want of water. It cost eight years of difficult labour to perforate. The geological strata round the French capital are all of the tertiary class, and constitute a basin similar, in most respects, to that upon which London stands. The surface at Grenelle consists of gravel, pebbles, and fragments of rock, which have been deposited by the waters at some period anterior to any historical record. Below this layer of detritus, it was known to the engineer that marl and clay would be found. Underneath the marl and the clay, the boring rods had to perforate pure gravel, plastic clay, and finally chalk. No calculation from geological data could determine the thickness of this stratum of chalk, which, from its powers of resistance, might present an almost insuperable obstacle. The experience acquired in boring the wells of Elbeuf, Rouen, and Tours was in this respect but a very imperfect guide. But supposing this obstacle to be overcome, was the engineer sure of finding a supply of water below this mass of chalk? In the first place, the strata below the chalk possessed all the necessary conditions for producing Artesian springs, namely successive layers of clay and gravel, or of pervious and impervious beds. M. Mulot, however, relied on his former experience of the borings of the wells at Rouen, Elbeuf, and Tours, where abundant supplies of water had been found below the chalk, between similar strata of clay and gravel, and he was not disappointed.

M. Arago had shown that the water of the spring here would necessarily rise to the surface, because in the well at Elbeuf, which is nearly 9 yards above the level of the sea, the water rises from 27 to 29 yards above the surface of the earth, and consequently, from 36 to 38 yards above the ocean level. Now, as the orifice of the bore at Grenelle is only 34 yards above the same level, it followed that, if the identical water-bed was met with, the water would rise above the earth's surface at Grenelle.

The necessary works were commenced with boring rods about 9 yards long, attached to each other, and which could be raised or lowered by mechanical power, while an ingenious method was adopted for giving them a rotary motion. The diameter of the tube at the top of the bore is 11 inches and at the bottom 6·63 inches, according to M. Rey. The instrument affixed to the end of the lowest boring rod was changed according to the different strata which were successively attacked: the form suited for passing through the softer materials near the surface being unsuitable for boring through the chalk and flint, a hollow tube was used for the former, while a chisel-shaped tool was employed to penetrate the latter. The size of the rods was lessened as the depth increased; and, since the subterranean water was not reached so soon as was expected, it became requisite to enlarge five several times the diameter of the bore, in order to permit the work to be successfully prosecuted. Accidents occurred which tried the patience of the projectors. In May, 1837, when the boring had extended to a depth of 418 yards, the hollow tube, with nearly 90 yards of the long rods attached to it, broke and fell to the bottom of the hole, whence it became necessary to extract the broken parts before any further progress could be made. The difficulty of accomplishing this task may be conceived; for the different fragments were not all extracted until after the constant labour of 15 months. Again, in April 1840, in passing through the chalk, the chisel attached to the boring rod got detached,

Digitized by Google

and before it could be recovered, several months were spent in digging round about it. A similar occurrence again created an obstacle which impeded the work for 3 months, but instead of withdrawing the detached part, it was forcibly driven down among the stratum of gravel. At length, in February, 1841, after 8 years' labour, the rods suddenly descended several yards, having pierced into the vault of the subterranean waters so long sought after by the indefatigable engineer. A few hours afterwards, he was rewarded for all his anxious toils; for lo! the water rose to the surface, and discharged itself at the rate of 881,884 gallons in every 24 hours; the temperature of the water being nearly 82° F. At first it brought up so great a quantity of sand that the tube was several times choked up by it, and even now it is not free from occasional, though rare interruptions, but the force of the column of water has always proved sufficient to clear its way after a short interval. The water flows in a clear continuous stream, and is carried by pipes to a reservoir near the Pantheon, whence it is distributed over the adjacent parts of the city, as well as along the line of the Boulevards from the *abattoir* to the Observatory. By means of small pipes, also the École Militaire, the Invalides, and two or three other public establishments, are supplied with this water.

The strata traversed in forming this celebrated well were as follows:—

Drift-sand and gravel		33 feet.
Lower tertiary strata		115 „
Chalk with flints	1148	1394 „
Ditto, lower	246	
Calcareous sandstone, clays, and sands ending in a bed of green-coloured sand		256 „
		1798 „

The surface of the ground at the well is 102 feet above the level of the sea, and the water is capable of being carried above this to a height of 120 feet.

The French geologists consider that the sands from which the supply is obtained are either subordinate beds of *the gault*, or as belonging to the *lower greensand*. They crop out in a zone of country about 100 miles eastward of Paris, and range along the segment of a circle, of which Paris is the centre, from between Sancerre and Auxerre, passing near to Troyes, thence by St. Dizier to St. Ménéhould. The outcrop of this formation is continued some distance further north; it is also prolonged beyond Sancerre, south-westward towards Bourges, Chatellerault, and then north-west to Saumur, Le Mans, and Alençon. But the superficial area which it occupies in in these latter districts does not appear to contribute to the water supply of Paris, for the axis of elevation of Mellerault must intercept the subterranean passage of the water from the district south of that line, whilst, on the north of Paris, the anticlinal line of the "Pays de Bray" and some smaller faults in the Aisne, produce probably a similar stoppage with respect to the northern districts. The superficial area, therefore, from which the strata at the well of Grenelle draw their supplies of water, forms on the east of Paris a belt stretching from near Auxerre to St. Ménéhould.

The exposed surface of the water-bearing beds which supply the well of Grenelle is about 117 square miles; the subterranean area in connection with these lines of outcrop may possibly be about 20,000 square miles, and the average thickness of the sands of the *grès verts*, serving in their underground range as a reservoir for the water, does not probably exceed 30 or 40 feet.—*Prestwich on the Water-bearing Strata of London.*

The opportunity of ascertaining the temperature of the earth at different depths was not neglected during the progress of the works at Grenelle. Thermometers placed at a depth of 30 yards in the wells of the Paris Observatory invariably stand at 53° F. The temperature of the Artesian well at Grenelle at 1657 feet is 79° 5′, at 1800, the depth finally arrived at, the temperature of the water which rose to the surface was 81°, corroborating previous calculations on the subject. For a descent of 572 yards there is an increase of temperature equal to 28° F., which is 20·4 yards, or 61·2 feet, for each degree of that scale. Now that the skilful labour of so many years is terminated, the Parisians regret that the subterranean sheet of water had not lain 1000 yards beneath the surface, that they might have had an overflowing stream of water at 104°, to furnish a cheap supply to their numerous hot-bath establishments. In Westphalia, at 2000 feet, 90° 95′ F. was the temperature of the water.

In boring Artesian wells through stratified formations, several sheets of water are met with at successive heights; as at Saint Ouen there are 5, each capable of rising. one of these is at 36 metres of depth; a second at 45½ m., a third at 51½ m., a fourth at 59·30 m., and a fifth at 66½ m. (*the metre being* 3·280 *English feet.*) At Tours there are 3 sheets susceptible of rising above the surface, at 95, 102, and 125 metres respectively

Digitized by Google

beneath it. Seven large sheets of fresh water were in like manner observed in boring for coal near Dieppe. The deepest sheet, having the greatest superincumbent pressure, in general gives the highest hydrostatic level. The quantity of water furnished by such wells seems to be nearly constant: thus the well of Bages, near Perpignan, delivers nearly 3000 pints per minute, and that at Tours about 2000 pints at 6½ feet above the level of the ground.

As the cost of these wells is an important consideration, the following statement from the "Water-bearing Strata of London" is of much value.

"M. Dégoussée has recently informed me of his having contracted to bore an Artesian well at Rouen to the depth of 1080 feet (through the lower cretaceous and oolitic series) for 1600*l.*, expenses of every kind to be defrayed by him. M. Dégoussée has constructed three Artesian wells in different parts of France, of about 820 to 830 feet each, at an expense, including tubes and all expenses, of from 600*l.* to 1000*l.* The Calais well offers a very near counterpart of the deposits which occur beneath London, but the difficulties of the first 240 feet much exceeded those which would be met with here, and the chalk is probably 100 to 200 feet thicker. Here and at Paris the first 1000 feet cost less than 3000*l.*, and at Doncherry apparently not much more than 2000*l.*"

The following Table shows the cost of several of the Artesian wells of France :—

Grenelle,	Dept.	Seine	1798 feet	-	-	£14,500
Calais	„	Pas de Calais	1138 „	-	-	3,560
Donchery	„	Ardennes	1215 „	-	-	3,045
St. Fargeau	„	Yonne	666 „	-	-	1,216
Lille	„	Nord	592 „	-	-	320
Crosne	„	Seine and Oise	333 „	-	-	190
Brou	„	Marne	246 „	-	-	200
Ardres	„	Nord	155 „	-	-	64
Claye	„	Seine and Marne	108 „	-	-	78
Chaville	„	Oise	65 „	-	-	15

It appears that, in England, the cost of boring is about 5*s.* for the first 10 feet, 2*l.* 10*s.* for forty feet, 5*l.* 5*s.* for 60 feet, 13*l.* 15*s.* for 100 feet, and so on in proportion.

Mr. Landall of Edinburgh informs us, that in Scotland they reckon 100 or 110 fathoms a very deep bore; and it is all done with the old screwed rods and chisels. "I have," he says, "once or twice worked the lever with a steam-engine, and cleaned the bore with a wire rope fixed to the sluger, and a few lengths of rod to make it sink quickly, which is a very great economy, as it saves the screwing and unscrewing and much handling. When the bore is approaching 100 fathoms, it is a great economy to erect a small engine, and clean with a wire rope."

The following particulars relative to the conditions of some Artesian wells in this country are derived from Sir Charles Lyell's "Principles of Geology," where the geological question is fully treated.

At Sheerness, at the mouth of the Thames, a well was bored through 300 feet of London clay, when, on entering a bed of sand, water burst up impetuously. Another boring at the same place passed through 328 feet of clay, and water ascended eight feet above the level of the ground.

At Fulham, after penetrating to the depth of 317 feet, 67 feet of which were in chalk, water was discharged at the rate of 60 gallons a minute.

At Chiswick the borings passed through 19 feet of gravel, 242½ feet of clay and loam, and 67½ feet of chalk, when water rose to the surface.

At the Duke of Northumberland's, at Chiswick, the borings were carried 620 feet into the chalk, when water rose four feet above the surface.

The deep wells of London are all in the chalk. The depths of some of the most important are given in Mylne's "Section of the London Strata," as follows :—

	Depth.
Combe and Co.	522 feet
Excise Office, City	499 „
Plummer, Old Street	475 „
Meux and Co.'s Brewery	425 „
Hampstead Water Works	450 „
North Western Railway Station	400 „
Truman and Co.	400 „
Elliot and Co.	398 „
Kensington Union	370 „
Model Prison, Holloway	370 „

Digitized by Google

It appears desirable to collect, within a limited compass, all the available information of importance in connexion with this subject. Mr. William Whitaker, of the Geological Survey of Great Britain, has published a memoir on "*The Geology of Parts of Middlesex, Hertfordshire, Buckinghamshire, Berkshire, and Surrey*," full of valuable information. In the appendix to this memoir, he has given an abstract table of well sections, shewing the thickness of the different strata, and the total depth of the sinkings. From this table I have selected the more important wells, which show in a satisfactory manner the conditions of the country through which they have been sunk which Mr. Whitaker has kindly corrected.

Sections of some of the Deep Wells in London and the adjoining Country. See Sheet 7 of the Map of the Geological Survey of Great Britain.

	Soil, Made Ground, Brick Earth and Gravel.	London Clay.	Woolwich and Reading Beds.	Thanet Sand.	Depth to the Chalk.	In Chalk.
	ft.	ft.	ft.	ft.	ft.	ft.
Apothecaries Hall, Blackfriars	12	114	48	44	218	76
Bank of England	26	111	58½	39	234½	100
Chiswick, Griffin Brewery	40	140	90	29	299	46
Holloway, City Prison	—	135	69	13	217	102
Kentish Town Water-works*	—	236	61½	27	324½	586
Orange Street, near National Gallery	30	145	40	35½	250	50
Pentonville, Model Prison	17	113	54½	35	219½	151
Pimlico, Simpson's Factory, Grosvenor Road	26	112	67½	25½	231	100
Trafalgar Square	23	142	41	42	248	147
Truman and Hanbury's Brewery	23½	79½	53	43	199	331
Westbourne Estate Water-works	—	217	62	18	297	15
Westminster, Elliot's Brewery	32	140	67½	31½	271	127
„ Thorne's Brewery	27½	100	66½	36	230	70
Middlesex.						
Twyford, near Ealing	—	211	41	—	—	—
Winchmore Hill	—	186	44	—	230	—
Castleboar Hill, near Ealing	—	300	60	—	360	—
Colney Hatch, Lunatic Asylum	—	137	27	25	189	141
Hanwell, Lunatic Asylum	21	194	75	—	290	30
Hyde, The, Edgeware Road	—	66	34½	—	100½	37
Blackwall, Trinity Wharf	63	68	34	72	237	10
Hoxton	18	69	34	30	151	—
Mile End Road (City of London Union	35	60½	41	38½	175	10
Shoreditch Workhouse	18	60	40	39	157	100
Tower Hill (Royal Mint)	24	94	57	20½	195½	—
Surrey.						
Balham Hill, near Clapham Common	15	239	53	40	—	—
Mortlake Brewery	10	199	58	—	267	3
Southwark, Barclay's Brewery	27½	77½	62	36	203	over 100
Wandsworth, near Surrey County Lunatic Asylum	—	231	60	over 40	over 330	—
New Cross (Naval School)	—	23	51	48	125	25
Hertfordshire.						
Near Barnet Railway Station	—	115	44	—	159	280
Essex						
West Ham	33	—	42	57	132	306

* Sunk through the chalk and 391½ feet below, but unsuccessful at that depth.

Digitized by Google

The Artesian wells in Essex, which overflow, are of the following depths, according to Dr. Mitchell: —

Foulness Island	450 feet
Mersey and adjoining Islands	300 „
Wallis Island	400 „
Little Wigborough	250 „
Woodham	350 „
North Ockenden	80 „
Fobbing	100 „
Bulpham Fen	70-80 „

The question of water supply to the metropolis depends upon the situation of the most advantageous water-bearing deposit, or, as Mr. Prestwich states it, the extent of the superficial area occupied by the water-bearing deposit.

The lithological character and thickness of the water-bearing deposit, and the extent of its underground range.

The position of the outcrop of the deposit, whether in valleys or in hills; and whether its outcrop is denuded, or covered with any description of drift.

The general elevation of the country occupied by this outcrop above the levels of the district in which it is proposed to sink Artesian wells.

The quantity of rain which falls in the district under consideration, and whether, in addition, it receives any portion of the drainage from adjacent tracts, where the strata are impermeable.

The disturbances which may affect the water-bearing strata and break their continuity, whereby the subterranean flow of water would be impeded or prevented.

It is proposed, by the eminent authority we have already quoted, to bore through the chalk of the London basin, and penetrate the lower greensand formation.

113

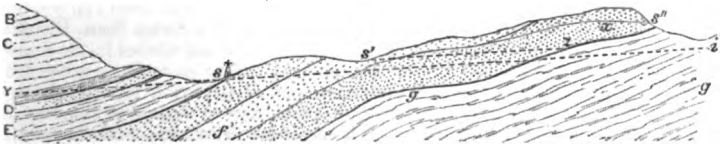

Referring to the former section across London (*fig.* 82), and then examining *fig.* 113, the importance of this suggestion will be evident. B is the lower tertiary strata, C is the chalk, D the upper greensand, E the gault, and *f* the lower greensand, *g* the upper part of the wealden formation, Y *i* line of the lowest valley of the district, and *s s' s''* line of water-level and springs. The edges of this formation are bounded on the north by the gault at *s*, and on the south by the wealden at *s''*. They are both impermeable strata, and present water-tight surfaces to the sand between them, so that any water which might find its way below the margins of these deposits could not escape again, but would follow the subterranean course of the intermediate strata.

After computing with great care the quantity of rain falling over the district, Mr. Prestwich gives the following Table, the result of his investigations: —

	Probable extent of effective Area.	Quantity of Rain Water received.	Probable Quantity absorbed.
	Sq. miles.	Inches annually. Gallons in 24 hours.	Inches annually. Gallons in 24 hours.
Lower Tertiaries	24	25 = 23,749,656	12 = 11,411,352
Upper Greensand	70	28 = 77,660,660	10 = 27,735,960
Lower Greensand	230	26½ = 241,500,920	16 = 145,811,720

"These calculations, although offered as only very general approximations, give results sufficiently marked and decided, that even admitting the necessity of not inconsiderable corrections, I think they establish strong *prima facie* evidence in favour of the upper and lower greensands beneath London containing unusually large quantities of water, which may be rendered available for the supply of the metropolis by means of Artesian wells. What their yield might be could only be determined exactly by actual experiment; but, judging from analogy, if the lower tertiary sands, with dimensions comparatively so limited, can nevertheless furnish not less than 3,000,000 to

Digitized by Google

4,000,000 gallons daily (and if, as is probable, they supply much of the water found in the upper beds of the chalk beneath London, their yield may amount to 8,000,000 or 10,000,000), then I submit that there is a reasonable probability, after allowing for the present over-drainage of the tertiaries of the upper greensand, with an effective area and a thickness three times greater than those of the lower tertiaries, yielding daily, and without diminution, from 6,000,000 to 10,000,000, and of the lower greensands, which exceeds by ten times the lower tertiaries in both these respects, of their yielding daily and without diminution from 30,000,000 to 40,000,000 gallons of water in the 24 hours, taken at about surface level."*

Since the beds of the lower greensand are 200 feet thick, and they occupy an area above and below ground of 4600 square miles, and since a mass of 1 mile square and 1 foot thick will hold more than 60,000,000 gallons of water, it is evident that a year's consumption of water, by the population of London, would not occasion a fall of 1 foot in the water-level over the entire area; that is, supposing no rain had fallen during the year. Such wells, too, would have the advantage of adding to the adornment of the metropolis; as, if the water of the lower greensand was liberated by means of Artesian wells, fountains would be at once formed projecting their water from 100 to 150 feet above the level of Trinity high water mark. See BORING for details of process.

ARTESIAN WELLS, *Negative*. Borings into the earth which are intended to carry off the waters from the surface. They have been proposed for the purpose of draining large tracts of swampy country. Especial information on this subject will be found in the "Society of Arts' Journal" for 1856, and Anstead's "Geology."

ARTICHOKE (*Cynara Scolymus*). A thistle-like plant, a native of the South of Europe, cultivated for the sake of the fleshy sweet receptacle of its flowers. JERUSALEM ARTICHOKES are the tubers of the *Helianthus Tuberosus*, and derive their name by a corruption, from the Italian *girasole*, sunflower.

ARTILLERY. The earliest European artillery of large size consisted of "serpentines" and "bombards," both being formed of longitudinal bars of wrought-iron, arranged like the staves of a cask, and hooped all over, or nearly so, with wrought-iron rings, shrunk on hot upon the bars. The serpentine was of small calibre, but of enormous length. A gun of this character, taken by the Swiss from Charles le Téméraire, at the battle of Granson, in 1476, is described and figured in the Emperor Napoleon's work, "Passé et l'Avenir d'Artillerie." This example is preserved in the collection of the Arsenal of Neuville, canton of Berne; it is only about two inches calibre, but about ten feet in length of chase, formed with wrought-iron, with rings shrunk on at some inches apart. It is embedded to its horizontal diameter, and for its whole length, in a timber bed.

The bombard was usually a much shorter piece, often of immense calibre. The great gun of Ghent, known as *Dulle Griette*, or the Raging Meg, is of this character. Voisin thus describes it:—"This enormous cannon, or ancient bombard, is one of the most curious pieces of artillery known, both in dimensions and construction, which is a *chef d'œuvre* of the art of forging. It is 18 feet in length, by 10 feet 6 inches in circumference, the mouth is 2¾ feet in circumference; it is forged from bars of iron, and weighs 33,606 lbs., and throws a stone ball of 600 lbs. weight. Its construction appears to date from the early years of the invention of artillery; in all probability it was forged while Philippe Van Artevelde, Riswaert of Flanders, was besieging Oudenarde, in 1382. It is certain that the people of Ghent, at war with their duke, Philippe, used it in 1411, and at the attack of Oudenarde, in 1452."

In the arsenal of St. Petersburg is a bombard which is 21 feet long; but it only weighs 17,435 lbs., and its calibre is only 68 lbs.

The Mons Meg of Scotland, which now quietly reposes on the King's Bastion, Edinburgh, is formed of longitudinal stave bars, in one ply only, and of superimposed rings, driven and shrunk on upon the taper. This will be understood from the accompanying figures (114, 115). This gun was made by one M'Kin, to whom the people of Kirkcudbright contributed the bars of iron. Mons Meg was used at the siege of Dumbarton, in 1489; at Norham, in 1497; it was used to fire a salute in 1548; and in 1682, when firing a salute in honour of the Duke of York, the iron rings, which are now partly wanting near the breach, were blown away without much disturbing the longitudinal bars. The gun actually discharged balls of Galloway granite against Threave Castle. The weight of a granite ball of 19½ inches diameter is about 330 lbs.

Colonel Symes, in his "Embassy to Ava in 1795," informs us that he found that cannon formed of prismatic bars of wrought hoop-iron hooped together were known

* Consult Prestwich, Water-bearing Strata of the Country around London; Mylne's Sections of the London Strata; M. Garnier's Traité sur les Puits Artésiens; Swindell, Rudimentary Treatise on Well-digging, Boring, &c.

Digitized by Google

in India from a remote antiquity. In Meyer's "Historical Manual" will be found a curious history of the progress of wrought-iron cannon, from 1494—when Charles VIII. suppressed wrought-iron bombards, and had no other artillery than that of bronze—to

114

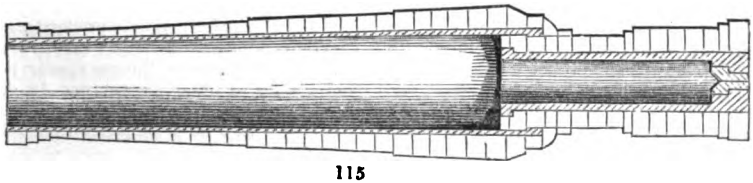

115

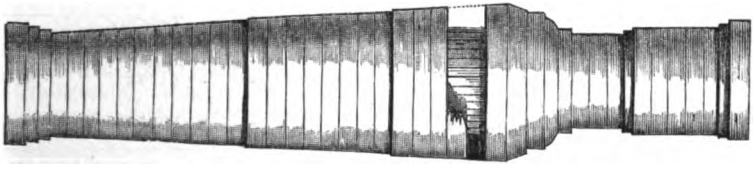

the present day. In 1856, Daniel Treadwell published a memoir "On the Practicability of constructing Cannon of great Calibre capable of enduring long-continued Use under full Charges." In this he proposes a very large wrought-iron gun, which should be capable of projecting a shot or shell of a ton weight through the space of six miles. He says, in a note to this paper, "Between the years 1841 and 1845, I made upwards of twenty cannon of this material (wrought iron). They were all made up of rings, or short hollow cylinders, welded together endwise. Each ring was made of bars wound upon an arbour spirally, like winding a ribbon upon a block, and, being welded and shaped in dies, were joined endwise when in the furnace and at a welding heat, and afterwards pressed together in a mould by a hydrostatic press of 1000 tons force." Finding in the early stage of the manufacture that the softness of the wrought iron was a serious defect, he formed those made afterwards with a lining of steel, the wrought-iron bars being wound upon a previously formed steel ring.

Mr. Nasmyth undertook, in 1854, an enormous wrought-iron gun of 13 inches calibre; but there was some failure in the forging.

In 1856, Messrs. Horsfall, of Liverpool, completed, and proved with a solid shot of 300 lbs. and 45 lbs. of powder, a wrought-iron gun, 13 inches calibre, and 13½ feet length of chase, perhaps the largest and most remarkable forging ever made. Two wrought-iron mortars, of 36 inches calibre, built up of separate pieces, were constructed about the same time for the Government, from the designs of Mr. Mallet. A detailed account of this monster mortar is given at page 208.

Cast-Iron Guns. — The date of the introduction of cast-iron guns is very uncertain. Blast furnaces for smelting replaced the old Catalan methods about the commencement of the fifteenth century, were known in the Hartz, in Westphalia, in Flanders, and seem to have come to us thence, and were not uncommon about the middle of the century. There is in the repository at Woolwich an 18-inch *Pierrière*, captured at Corfu, with the date 1684 upon it, an early example of cast iron.

In the sixteenth and seventeenth centuries the average sizes of guns in England were as follows:—

	Length. feet.	Calibre. lbs.	Weight. lbs.
The cannon royal, or piece of eight	12	48	8000
The demi-cannon	12	36	6000
The culverin	12	20	4800
The demi-culverin	11	10	2700
The saker	10	6	1500

The smaller sizes were called minion, falcon, falconet, rabinet, and base, the last of which only carried a 5-ounce ball of lead.

Cannon of Bronze.—The earliest bronze guns appear to have been cast in Europe about 1370. Between that and 1400, bombards were cast (after the more ancient models of iron) in bronze with separate and with attached chambers (*canons à boîte*), the ancestors of all modern breech-loading guns; and culverins, which replaced the

Digitized by Google

iron serpentines, and were of enormous length, 35 to 60 calibres, and great strength towards the breech, but of small calibre. Many examples remain of a later date: one at Dover Castle, another in the Dial Square, Woolwich Arsenal, and the celebrated one of Nancy (1598), above 21 feet in length, carrying about an 18-pound iron ball. In England, the earliest bronze guns are said to have been cast by one John Owen, in 1535.

Few examples are met with of guns formed of metal in strictly atomic proportions; but alloys are found therein presenting every formulæ, from 7Cu + Sn up to 83Cu + 4Sn. The proportions most approved of in the arsenals of Europe appear to vibrate between 100 by weight of copper to 9 of tin, up to 100 of copper and 12 of tin. In France, 100 copper + 11 tin by weight is the proportion fixed by law, and invariably aimed at. In the United States, 100 copper + 12·5 tin is adopted for certain species of guns.

The proportions of tin and copper used in making bronze guns in the United States:—

	Density.	Tenacity.
Tin, 1 part	7·297	2122
Copper, 8 parts	8·672	24252
Mean proportional	8·519	21793
Mean of 83 guns	8·751	
Mean of 83 gun-heads	8·523	29655

Bronze guns are liable to drop at the muzzle; this is due to the unequal temperature of the inside and of the outside of the gun.

Brass ordnance are made of what is called GUN METAL, composed of about 10 parts of copper and 1 of tin.

One of the first inquiries of importance in connection with the construction of pieces of artillery is that of the liability to fracture in the metal. Upon this point the researches of Mr. Mallet furnish much important matter. He tells us, as the result of his investigation, that *it is a law of the molecular aggregation of crystalline solids, that when their particles consolidate under the influence of heat in motion, their crystals arrange and group themselves with their principal axes in lines perpendicular to the cooling or heating surfaces of the solid: that is, in the lines of the direction of the heat-wave in motion, which is the direction of least pressure within the mass.* And this is true, whether in the case of heat *passing from* a previously fused solid in the act of cooling and crystallising in consolidation, or of a solid not having a crystalline structure, but capable of assuming one upon its temperature being sufficiently raised, by heat applied to its external surfaces, and so *passing into* it.

Cast-iron is one of those crystallising bodies which, in consolidating, obeys, more or less perfectly according to conditions, the above law. *In castings of iron the planes of crystallisation group themselves perpendicularly to the surfaces of external contour.* Mr. Mallet, after examining the experiments of Mr. Fairbairn — who states ("Trans. Brit. Ass." 1853) that the grain of the metal and the physical qualities of the casting improve by some function of the number of meltings; and he fixes on the thirteenth melting as that of greatest strength — shows that the size of crystals, or coarseness of grain in castings of iron, depends, for any given "make" of iron and given mass of casting, upon *the high temperature of the fluid iron above that just necessary to its fusion, which influences the time that the molten mass takes to cool down and assume again the solid state.*

The very lowest temperature at which iron remains liquid enough fully to fill every cavity of the mould without risk of defect, is that at which a large casting, such as a heavy gun, ought to be "poured." Since the cooling of any mass depends upon the thickness of the casting, it is important that sudden changes of form or of dimensions in the parts of cast-iron guns should be avoided. In the sea and land service 13-inch mortars, where, at the chamber, the thickness of metal suddenly approaches twice that of the chase, is a malconstruction full of evils.

The following statements of experiments made to determine the effect produced on the quality of the iron in guns, by slow or rapid cooling of the casting, are from the report of Major W. Wade, of the South Boston Foundry, to Colonel George Bomford, of the Ordnance Department of the United States. Three six-pounder cannon were cast at the same time from the same melting of iron. The moulds were similar, and prepared in the usual manner. That in which No. 1 was cast was heated before casting, and kept heated afterwards by a fire which surrounded it, so that the flask and mould were nearly red hot at the time of casting; and it was kept up for three days. Nos. 2 and 3 were cast and cooled in the usual way.

At the end of the fourth day, the gun No. 1 and flask were withdrawn from the

Digitized by Google

heating cylinder while all parts were yet hot. Nos. 1 and 2 were bored for 6-pounders in the usual way; No. 3 for a 12-pounder howitzer, with a 6-pounder chamber. The firing of the guns was in every respect the same. Nos. 1 and 2 were fired the same number of times with similar charges. No. 1 burst at the 27th fire, and No. 2 at the 25th. It appears, from these results, that no material effect is produced on the quality of the iron by these different modes of cooling the castings.

A very extensive series of experiments was made, by the order of the United States Government, on the strength of guns cast solid or hollow. In these it was confirmed that the guns cast hollow endured a much more severe strain than those cast solid. Considerable differences were also observed, whether the casting was cooled from within or without; and Lieutenant Rodman's method of cooling from the interior is regarded as tending to prevent injurious strains in cooling.

Major Wade informs us that time and repose has a surprising effect in removing strains caused by the unequal coolings of iron castings.

Great improvements have been made in improving the quality of iron guns. Guns cast prior to 1841 had a density of 7·148, with a tenacity of 23,638. Guns cast in 1851 had a density of 7·289, with a tenacity of 37,774.

The following Table gives the results of all the trials made for the United States Government, showing the various qualities of different metals.

Metals.	Density.	Tenacity.	Transverse Strength.	Torsion.		Compressive Strength.	Hardness.
				At Half Degree.	Ultimate.		
Cast iron: —							
Least - - -	6·900	9,000	5,000	3861	5,605	84,592	4·57
Greatest - - -	7·400	45,970	11,500	7812	10,467	174,120	33·51
Wrought iron: —							
Least - - -	7·704	38,027	6,500	3197	- -	40,000	10·45
Greatest - - -	7·858	74,592	- -	4298	7,700	127,720	12·14
Bronze: —							
Least - - -	7·978	17,698	- -	2021	5,511	- -	4·57
Greatest - - -	8·953	56,786	- -	- -	- -	- -	5·94
Cast steel: —							
Least - - -	7·729	- -	- -	- -	- -	198,944	
Greatest - - -	7·862	128,000	23,009	- -	- -	391,985	

The following analyses of the metal of iron guns of three qualities are important.

Influence of Single Ingredients.

Classes.	Mechanical Tests.		Chemical Constituents.						
	Specific Gravity.	Tensile Strength.	Combined Carbon.	Graphite.	Silicium.	Slag.	Phosphorus	Sulphur.	Earthy Metals.
1	7·204	28,865	·0977	·0507	·0417	·0215	·0239	·0017	·0117
2	7·140	24,767	·0819	·0576	·0538	·0200	·0300	·0021	·0094
3	7·088	20,176	·0726	·0560	·0531	·0219	·0321	·0021	·0144

Influence of Two or more Ingredients.

Classes.	Mechanical Tests.		Chemical Constituents.					
	Specific Gravity.	Tensile Strength.	Silicium and Carbon.	Silicium and Slag.	Graphite and Slag.	Graphite, Silicium, and Slag.	Graphite, Slag, Silicium, and Phosphorus.	Total Carbon.
1	7·204	28,865	·1394	·0632	·0722	·1139	·1378	·1484
2	7·140	24,767	·1357	·0738	·0776	·1314	·1614	·1395
3	7·088	20,176	·1257	·0750	80	·1311	·1632	·1286

Digitized by Google

An inspection of the first of the foregoing tables, representing the average amount of each foreign ingredient in gun metal deduced from all the analyses, shows a considerable difference in the proportions of those ingredients in each of the three classes into which guns are divided. It will be observed, that while the proportion of combined carbon diminishes from the 1st to the 3rd class, that of silicium similarly increases, so that their united amounts are nearly the same. In other words, it appears that silicium can replace the carbon to a certain extent; but that the quality of the metal is injured where the amount of the silicium approaches that of the carbon. Karsten made a similar observation in determining the limits between cast iron and steel, but did not notice the influence of that substitution.

But the differences become more striking by combining the ingredients variously together, as in the second of those tables; and especially by comparing the extremes, which are each derived from a larger number of observations than the mean.

After showing the total amount of carbon (both combined and uncombined), silicium and conbined carbon are thrown together, which indicates the replacement by silicium of that portion of carbon set free in the form of graphite. The column "silicium and slag" shows the general depreciation of the metal as the silicious metal increases.—*From the Report of Campbell Morfit and James C. Booth to the Ordnance Office, United States Army.*

The following analyses (rejecting those substances of which only a mere trace has been discovered), from the same chemists, are selected as showing striking peculiarities.

Class.	Iron.	Graphitic Carbon.	Combined Carbon.	Silicium.	Slag.	Phosphorus.	Manganese.	Magnesium.	Calcium.	Aluminium.	Sodium and Potassium.
1. 32-pounder, which endured the extreme proof - -	·93520	·02000	·02200	·00776	·00250	·00036	·02100	- -	·00028	·00106	
2. 32-pounder, which endured the extreme proof. Hot blast iron - -	·88480	·02800	·00200	·02000	·00400	·00666	·05212	·00072	·00043	- -	·00034
24-pounder, which endured the extreme proof. Hot blast iron - - -	92400	·03000	·01200	·01790	·00200	00626	02244	·00080	·00028	·00234	
3. 42-pounder - - -	·92155	03200	·00700	·01130	·00100	·00800	01448	·00074	·00086	·00316	·00220
32-pounder - - -	·92540	02800	·00150	·00730	·00200	·00738	·02317	·00061	·00057	·00170	
32-pounder - - -	·93450	·02900	·00900	·00900	·00200	·01290	·01810	- -	?	·00158	·00026

Comparison of Weight, Strength, Extensibility, and Stiffness; Cast Iron being unity within practical limits to static forces only.

Material.	Weight for = Volume.	Strength.	Extensibility.	Stiffness.	Torsion.
Cast iron - -	1·00	1·00	1·00	1·00	1·00
Gun metal - -	1·18	0·65	1·27	0·53	0·55
Wrought iron -	1·07	3·00	0·45	2·20	1·11
Steel - - -	1·07	4·75	0·32	3·15	2·11

We find that wrought-iron guns are more than five-fold as durable as those of gun metal, and twenty-two times as durable as those of cast iron. And taking first cost and durability together, gun-metal cannon are about seventy-seven times, and cast-iron guns about thirty times, as dear as wrought-iron artillery. Again: the cost of horse-labour, or other means of transport for equal strength (and, of course, therefore, for equal effective artillery power), is about five times as great for gun metal, and nearly three times as great for cast-iron as for wrought-iron guns. In every respect in which we have submitted them to a comparison, searching and rigid, and that seems to have omittted no important point of inquiry, wrought iron stands pre-eminently superior to every other material for the fabrication of ordnance.—*United States Report.*

The advantages possessed by rolled bars for the construction of artillery are thus summed up by Mr. Mallet, in his "Memoir on Artillery":—

1. The iron constituting the integrant parts is all in moderate-sized, straight, prismatic pieces, formed of rolled bars only; hence, with its fibre all longitudinal, perfectly uniform, and its extensibility the greatest possible, and in the same direction in

Digitized by Google

which it is to be strained; it is, therefore, a better material than any forged iron can, by possibility, be made.

2 The limitation of manufacture of the iron, thus, to rolling, and the dispensing with all massive forgings, insures absolute soundness and uniformity of properties in the material.

3. The limited size of each integrant part, and the mode of preparation and combination, afford unavoidable tests of soundness and of perfect workmanship, step by step, for every portion of the whole: unknown or wilfully concealed defects are impossible.

4. Facility of execution by ordinary tools, and under easily obtained conditions, and without the necessity of either for peculiarly skilled labour on the part of "heavy forgemen," or for steam or other hammers, &c., of unusual power, and very doubtful utility; and hence very considerable reduction in cost as compared with wrought-iron artillery forged in mass.

5. Facility of transport by reduction of weight, as compared with solid guns of the same or of any other known material.

6. A better material than massive forged iron, rolled bars are much more scientifically and advantageously applied; the same section of iron doing much more resisting work, as applied in the gun built-up in compressed and extended plies, than in any solid gun.

7. The introduction thus into cannon of a principle of elasticity, or rather of elastic range (as in a carriage-spring divided into a number of superimposed leaves), greater than that due to the modulus of elasticity of the material itself; and so acting, by distribution of the maximum effort of the explosion, upon the rings successively recipient of the strain during the time of the ball's traject through the chase, as materially to relieve its effects upon the gun.

Considerable attention has been given, of late years, to the construction of very powerful pieces of ordnance. Cast-iron cannon are usually employed, but these very soon become useless when exposed to the sudden shocks of rapid firing. Cast iron is, comparatively speaking, a weak substance for resisting extension, or for withstanding the explosive energy of gunpowder, compared with that of wrought iron, the proportion being as 1 is to 5; consequently, many attempts have been made to substitute wrought-iron cannon for cast.

A gun, exhibited in 1851 by the Belgian Government, made of cast iron "*prepared with coke and wood*," was said to have stood 2116 rounds, and another, 3647 rounds, without much injury to the touch-hole or vent. Another is said to have been twice "rebouched," and has stood 6002 rounds without injury. As few guns of cast iron will stand more than 800 rounds without becoming unserviceable, this mode of preparing the iron appears to be a great improvement. At St. Sebastian 2700 rounds were fired from the English batteries, but, as was observed by an eye-witness, "you could put your fist into the touch-holes."—*Colonel James*, R. E.

In Prussia they have for some time made cannon of "forged cast steel." To get over the difficulty of forging the gun with the trunnions on, the gun has been made without them, and a hollow casting with trunnions afterwards slipped over the breech, and secured in its proper position by screening in the cascable. The tenacity of this metal must be very great.

Casting of Guns.—Guns have long been cast in a vertical position, and with a certain amount of "head of metal" above the topmost part of the gun itself. One object gained by this (of great value) is to afford a gathering-place for all scoria, or other foreign matter; an end that might be much more effectually accomplished were the metal always run into the cavity of the mould by "gaits" leading to the bottom, or lowest point, in place of the metal being thrown in at the top, with a fall, at first, of several feet, as is now the common practice, by which much air and scoria are carried down and mixed with the metal, some of which never rises up again, or escapes as "air-bubbles."

The value of the "head of metal" in casting of guns is shown by the following Table, by Mr. Mallet, from the "Transactions of the British Association, 1840."

Digitized by Google

General Classification of the principal Makes of British Cast Irons as applicable to Artillery.
(All deduced from equal Pieces cast One Inch thick and Five Inches square.)

Number.	Class of Iron.	Hot or Cold.	Commercial No.	Fracture.	Character in Working.	Sp. Gr.	How Cast.	Physical Maxima and Minima.
1	Apedale - -	Cold	No. 2	Silvery	Least fusible; thickening rapidly when fluid by a spontaneous "puddling," vesicular, often crystalline, incapable of being cut by chisel or file; ultimate cohesion a maximum, and elastic range generally a minimum.	7·603	Chilled	
2	Hardest Procurable.		Scrap	,,		7·624	Sand	Maximum density.
3	Oldberry - -	Hot	No. 3	,,		7·501	Sand	Coefficient E nearly as in No. 22.
4	Ponkey - -	Cold	No. 3	,,		7·233	Sand	Maximum ultimate strength and value of Te. nearly as in No. 40.
5	Pentwyn - -	Hot	No. 2	,,		7·629	Chilled	
6	Calder - - -	Hot	No. 4	,,		7·527	Sand	
7	Shotts - - -	Hot	No. 4	,,		7·158	Sand	
8	Dowlais (Finery Pig).	Hot	No. 4	,,		6·378	Sand	Full of microscopic vesicles.
9	Arigna - -	Cold	No. 1	Micaceous	Very soft; feels greasy; peculiar micacious appearance, generally owing to excess of manganese; soils the fingers strongly, crystals large; runs very fluid; contraction large.	7·015	Sand	
10	Burchill's - -	Cold	No. 1	,,		6·928	Sand	
11	Muirkirk - -	Hot	No. 2	,,		6·980	Sand	
12	Pentwyn(peculiar)	Hot	No. 1	,,		7·000	Sand	
13	Arigna - - -	Cold	No. 3	Mottled	Tough and hard, can be with difficulty filed or cut; crystals large and small mixed; sometimes runs thick; contraction on cooling a maximum.	7·308	Chilled	
14	Apedale (Cylinder Iron).	Hot	No. 2	,,		7·116	Sand	
15	Pentwyn - -	Hot	No. 2	,,		7·017	Sand	
16	Calder No. 1, + Pentwyn - - Do. No. 2, + p	- -	- -	,,		7·168	Sand	
17	Grey Cast Iron (Blaenavon No. 2. Scrap.)	- -	- -	,,		7·138	Sand	Maximum contraction in cooling.
18	Monkland - -	Hot	No. 4	,,		7·294	Sand	
19	Clyde - - -	Cold	No. 1	,,		7·140	Sand	
20	Parkfield - -	Cold	No. 1	,,		7·248	Sand	
21	Apedale - -	Hot	No. 1	,,		7·268	Sand	
22	Devon - - -	Cold	No. 3	,,		7·280	Sand	Coefficient E maximum but Te. small.
23	Calder - - -	Hot	No. 1	,,		7·079	Chilled	
24	Arigna ½, Scrap ½	- -	- -	,,		7·134	Chilled	
25	Calder ½, Scrap ½,	- -	- -	Bright Grey	Toughness and hardness most suitable for working; ultimate cohesion and elastic range generally are balanced most advantageously; crystals uniform, very minute.	6·329	Chilled	Minimum density forms as No. 8.
26	Gartsherrie - -	Hot	No. 2	,,		7·115	Sand	
27	Low Moor - -	Cold	No. 2	,,		7·150	Sand	
28	Shotts - - -	Hot	No. 2	,,		7·152	Sand	
29	Blaina - - -	Cold	No. 3	,,		7·159	Sand	
30	Arigna - - -	Cold	No. 3	,,		7·141	Sand	
31	Gartsherrie - -	Hot	No. 1	,,		7·001	Sand	
32	Shotts - - -	Hot	No. 3	,,		7·183	Sand	
33	Varteg Hill - -	Hot	No. 2	,,		7·074	Sand	Value of Te, maximum.
34	Calder - - -	Hot	No. 3	,,		7·064	Sand	
35	Summerlie - -	Hot	No. 2	,,		7·156	Sand	
36	Madeley Wood -	Cold	No. 1	,,		7·115	Sand	
37	Elsecar - -	Cold	No. 1	,,		7·097	Sand	
38	Cinderford - -	Cold	No. 1	,,		7·049	Sand	
39	Carron - - -	Hot	No. 2	,,		7·081	Sand	
40	Gartsherrie - -	Hot	No. 3	,,		7·047	Sand	
41	Muirkirk - -	Hot	No. 3	Dull Grey	Less tough and hard than the preceding, other characters alike; contraction on cooling generally a minimum.	6·838	Sand	
42	Monklands - -	Hot	No. 3	,,		7·124	Sand	
43	Dowlais - -	Hot	No. 1	,,		7·164	Sand	
44	Arigna - -	Cold	No. 2	,,		6 809	Sand	Minimum density, solid.
45	Shotts - - -	Hot	No. 1	,,		7·109	Sand	
46	Lilleshale - -	Cold	No. 1	,,		7·205	Sand	
47	Shotts - - -	Hot	No. 2	,,		7·152	Sand	
48	Coed Talon - -	Hot	No. 2	,,		7·030	Sand	
49	Butterly - -	Hot	No. 1	,,		7·063	Sand	
50	Coed Talon -	Cold	No. 2	,,		7·029	Sand	
51	Carron - - -	Cold	No. 2	Dark Grey	Most fusible; remains long fluid; exudes graphite in cooling; soils the fingers; crystals large and lamellar; ultimate cohesion a minimum, and elastic range generally a maximum.	7·107	Sand	
52	Dowlais - -	Cold	No. 3	,,		7·159	Sand	
53	Dowlais - -	Cold	No. 1	,,		7·192	Sand	
54	Blaenavon - -	Cold	No. 1	,,		7·143	Sand	
55	Muirkirk - -	Cold	No. 2	,,		7·076	Sand	Minimum ultimate strength.
56	Milton - - -	Hot	No. 1	,,		7·073	Sand	
57	Calder - - -	Hot	- -	,,		7·027	Sand	
58	Calder ½, Pentwyn ½	- -	- -	,,		6·978	Sand	
59	Arigna ½, Pentwyn ½	- -	- -	,,		7·050	Sand	

Mallet on the Physical Conditions involved in the Construction of Artillery.

Digitized by Google

Table showing the Increase of Density in Castings of large Size, due to their Solidification under a Head of Metal, varying from two to fourteen Feet:—

No. of Experiment.	Calder Cast Iron, No. 1. Hot Blast.			Blaenavon, No. 1. Cold Blast.			Apedale, No. 2. Hot Blast.			Quam prox. Pressure when fluid in lbs. per square inch.
	Depth of Casting in Inches.	Specific Gravity.	First Difference.	Depth of Casting in Inches.	Specific Gravity.	First Difference.	Depth of Casting in Inches.	Specific Gravity.	First Difference.	
1	0	6·9551		0	7·0479		0	7·0328		·0
2	24	6·9633	·0082	24	7·0576	·0097	24	7·0417	·0089	6·4
3	48	7·0145	·0512	48	7·0777	·0201	48	7·0558	·0141	12·8
4	72	7·0506	·0361	72	7·0890	·0113	72	7·0669	·0111	19·2
5	96	7·0642	·0136	96	7·1012	·0122	96	7·0789	·0120	25·6
6	120	7·0776	·0134	120	7·1148	·0136	120	7·0915	·0126	32·0
7	144	7·0907	·0131	144	7·1288	·0140	144	7·1046	·0131	38·4
8	168	7·1035	·0128	168	7·1430	·0142	168	7·1183	·0137	44·8

The experiments were made upon cylindrical shafts of cast iron, cast vertically in dry sand-mould, under heads gradually increasing up to fourteen feet in depth, and all poured from "gaits" at the bottom.

These experiments show an increase of density due to fourteen feet head, about equal to a pressure of 44·8 lbs. per square inch on the casting; from 6·9551 to 7·1035 for Scotch cast iron.

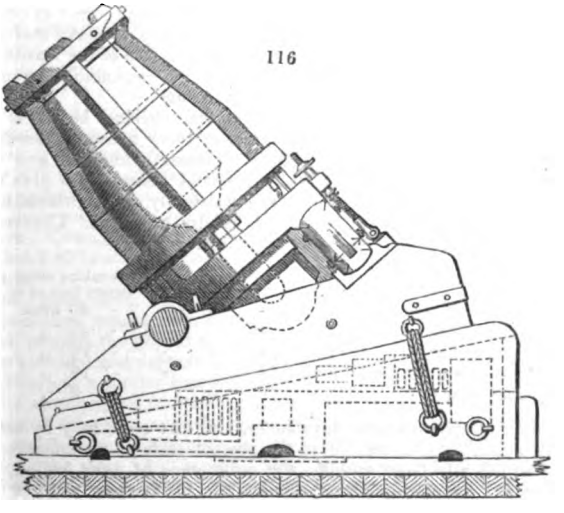

Mallet's mortar (fig. 116) is wholly formed of wrought-iron in concentric rings, and each mortar is separable at pleasure into 13 separate pieces, the heaviest weighing about 11 tons, the weight of the entire mass being 52 tons.

About the latter end of 1854, the attention of Mr. Robert Mallet, C.E., was directed to the mathemathical consideration of the relative powers of shells in proportion to their increase of size or of diameter. His inquiries resulted in a memoir presented by him to Government, in which he investigated the increase of power in shells with increase of diameter, under the heads of:—1, Their penetrative power; 2, Their increased range and greater accuracy of fire; 3, Their explosive power; 4, Their power of demolition, or of levelling earthworks, buildings, &c.; 5, Their fragmentary missile power; 6, and lastly, their moral effect,—in every case viewing the shell, not as a weapon against troops, but as an instrument of destruction to an enemy's works. The result so convinced Mr. Mallet of the rapid rate at which the destructive powers of a shell increase with increase of size, that he was induced to propose to Govern-

Digitized by Google

ment the employment of shells of a magnitude never before imagined by anyone, namely, of a yard in diameter, and weighing, when in flight, about a ton and a quarter each: and to prepare designs, in several respects novel and peculiar, for the construction of mortars capable of projecting these enormous globes. Such a mortar was made, and on the 19th of October, 1857, the first of those colossal mortars, constructed from Mr. Mallet's design, was fired on Woolwich Marshes, with charges (of projection) gradually increasing up to 70 lb.; and with the latter charge a shell weighing 2550 lbs. was thrown a horizontal range of upwards of a mile and a half to a height of probably three quarters of a mile, and falling, penetrated the compact and then hard dry earth of the Woolwich range to a depth of more than 18 feet, throwing about cartloads of earth and stones by the mere *splash* of the fall of the empty shell.

The position attained by Rifled Ordnance manufactured on the principles advocated by Sir William Armstrong is such, that it appears desirable that the clearest possible view should be given of the mode of constructing those guns. Sir William Armstrong himself so very clearly describes the principles by which he has been guided in the construction of his guns—that his paper communicated to the British Association, and reprinted in "The Industrial Resources of the Tyne, Wear, and Tees," has, with some slight alteration, been retained as the best possible source of information.

"In the month of December, 1854, my friend Mr. Rendell, the well-known engineer, submitted to Sir James Graham a communication he had received from me suggesting the expediency of enlarging the ordinary rifle to the standard of a field gun, and using elongated projectiles of lead instead of balls of cast-iron. This communication was handed by Sir James Graham to the Duke of Newcastle, then Minister of War, with whom I had an interview on the subject, in company with Mr. Rendell.

At this interview I was authorised by His Grace to carry my views into effect, by constructing upon the plan I had suggested one or more guns, not exceeding six in number, and to make the necessary experiments in connection with the subject.

In acting upon the authority thus received, I deemed it expedient to confine myself, in the first instance, to the production of a single gun, but to make that one gun the test, not only of the principles I had recommended, but also of the feasibility of loading field-pieces at the breech, and applying certain mechanical arrangements to counteract recoil, and facilitate the pointing of the gun.

The substitution of elongated solid projectiles for spherical bullets is an essential step to the attainment of very extended range in artillery practice: but the lengthening of a solid projectile involves the necessity of strengthening the gun to enable it to resist the greater intensity of force which becomes necessary to give the required velocity; and this object can only be effected, consistently with lightness, by constructing the gun of steel or wrought-iron instead of cast-iron or bronze. The tensile strength of these several materials is exhibited in the following table:—

	Breaking strain per square inch of section.
Cast-steel, about	60 tons.
Shear-steel	42 „
Wrought-iron	26 „
Bronze or gun metal about	16 „
Cast-iron	8 „

The first and strongest of these substances, viz. cast steel, may be set out of the question, as it appears impracticable, in the present state of manufacture, to produce it in masses sufficiently large without the occurrence of flaws, which, in the great majority of cases, would destroy its efficiency. Shear-steel may be forged, like wrought-iron, into large pieces: but in a gun made from a solid mass of either of these substances, the full strength of the material can never be realised, because the tenacity of wrought-iron or steel is always less in the lateral than in the longitudinal direction: and it is the lateral strength which, in a gun so manufactured, would be chiefly brought into action. There is also much uncertainty in the lateral strength of wrought iron or steel, because the flaws or imperfections of welding which exist in all thick masses of those materials almost invariably run in the direction of the length, and in general, therefore, only detract from the strength in the transverse direction. It is for these reasons that the barrels of muskets and sporting guns are formed by twisting long slips of iron into spiral tubes, and then welding together the edges, by which means the longitudinal strength of the slip becomes opposed to the explosive force of the powder, and the weldings being transverse with the bore, have no important influence in lessening the strength of the barrel. It is also to be observed, in reference to the strength of steel or wrought-iron cannon, that the resistance of a cylinder to internal pressure does not increase in the ratio of its thickness. If

Digitized by Google

the cylinder be regarded as made up of a number of concentric layers, each capable of sustaining without injury a degree of extension proportionate to its length, it is obvious, that the greater the circumference of each layer, the less will it be stretched by a given distention of the bore, and, consequently, the less will it contribute to the general strength of the cylinder. The ratio of this decrease is very rapid, being as the square of the circumference, or distance from the centre inversely; and, consequently, when the cylinder is thick, the deficiency of strength from this cause becomes very great.

Now this defect can only be remedied by giving to the external portion of the cylinder a certain initial tension, gradually decreasing and finally passing into compression towards the centre; and although this condition cannot be effected by any known process of forging or casting, yet where wrought-iron or steel is the material used, it may in a great measure be attained by shrinking an outer cylinder upon an inner one, and in like manner superadding others until the requisite thickness has been acquired.

The method, however, of forming steel or wrought-iron guns, by simply forging the material into the required form, and boring it in the usual manner, was so much recommended by its facility, that I was induced to make some experiments to test its sufficiency.

With this view a number of cylinders were forged, each twelve inches long and five inches in the outward diameter. These were bored to an internal diameter of one and three-quarter inches, and tested in the following manner:—Each cylinder was entirely filled with gunpowder, and the open end was pressed by screws against a very thick iron tube bored to the same diameter, and containing a cylindrical shot of lead equal in weight to about three spherical shot of the same diameter and material. Several of the cylinders burst on the first discharge, and those which remained uninjured were afterwards reduced in thickness, and tested a second time. If they still resisted the explosion, the thickness was further diminished; and this mode of proceeding was continued until fracture took place in all of them.

The results obtained in this manner showed, as had been apprehended, great uncertainty in the strength of the material, and rendered it impossible to define the thickness necessary to resist a given charge of powder. I felt compelled, therefore, to dismiss this mode of construction, and to adopt another more correct in principle, but more difficult of execution.

In the above experiment it was found that steel was more subject to defects of welding than iron; but being a harder substance, and therefore more fitted to form the surface of a bore, I determined to apply it as an internal lining, and to obtain the necessary strength by encircling it with twisted cylinders of wrought iron, tightly contracted upon the steel core by the usual process of cooling after previous expansion by heat. Considerable difficulties were encountered in carrying this plan into practice; but I ultimately succeeded in completing a gun, of which the following is a description.

The gun, when fired, recoils upon an ascending slide without displacing the carriage, and then returns to its place by gravity. The slide frame turns upon a pivot which permits the gun to be pointed to either side without moving the carriage. The gun is elevated and depressed by means of a screw, which is fixed to and moves with the slide, and a similar screw is applied for the traversing or horizontal movement. The arrangement for loading at the breech may be described as follows:—At the back end of the gun a powerful screw is applied, having a hole through the centre, forming a prolongation of the bore, and through which hole the bullet and charge are delivered into the gun. A "breech-piece" with a mitred face, fitting a similar face at the end of the bore, is then dropped into a recess, and by the action of the screw pressed tightly into its seat, so as effectually to close the bore.

In order to facilitate the loading, the bullet and cartridge are placed in a tube, from which they are thrust into the gun by means of a rammer.

The breech-piece contains a vent, with a cavity for receiving a small quantity of powder to ignite the charge; and as the breech-piece is prepared for firing while the gun is being loaded, no time is lost in subsequent priming.

Several of these breech pieces accompany the gun, some being arranged to fire by percussion caps, and others by friction tubes or port-fires.

The bore of the gun is one and three-quarter inches in diameter, and contains eight spiral grooves, having an inclination equal to one turn in twelve feet. These grooves terminate at a distance of fourteen inches from the breech, and the bore then gradually expands in a length of three inches, from one and three-quarters inches to one and seven-eighths inches in diameter. The bullet, in the operation of loading, passes freely through this widened space; but its diameter being a little in excess of the bore, it lodges in the tapered contraction at the commencement of the grooves.

Digitized by Google

The mode in which the gun is made up of separate parts consists in surrounding the steel centre with twisted cylinders of wrought-iron, made in a similar manner to gun barrels, and being shrunk upon the steel, they are in that state of initial tension which is necessary to bring their entire strength into operation.

The weight of the gun by itself is about 5 cwts.; but, including the carriage, its weight is nearly identical with that of a light 6-pounder with its carriage complete. It is probably heavier than necessary, but recoil might be inconveniently increased if the weight were much reduced.

Having now described the gun and its carriage, I shall proceed to speak of the projectile.

The resistance which a projectile encounters in passing through the air is mainly dependent upon the area of its cross section, and the advantage of lengthening a bullet consists in augmenting the weight without increasing this sectional area; but in order to realise this advantage it is essential that the bullet be guided endways in its course, and this can only be effected by causing it to rotate rapidly upon its longer axis, which is accomplished by firing it from a rifled bore.

This peculiar influence of rotation, in giving persistency of direction to the axis of a projectile, is entirely distinct from that which it also possesses of correcting the tendency to aberration arising from irregular form or density; and in order to investigate experimentally the nature of this action, I constructed an apparatus by which a cylindrical bullet could be put into extremely rapid rotation, and be then suspended in a manner which left it free to turn in any direction.

When thus suspended, the rotating bullet exhibited the same remarkable properties as are possessed by the revolving disc in the recently invented instrument called the "Gyroscope." When pressure was applied to either end of the axis, the movement which took place was not in the direction of the pressure, but at right angles to it. Thus a vertical pressure deflected the axis horizontally, while lateral pressure deflected it vertically. But the important point elicited was this, that the time required to produce these indirect movements became greater as the velocity was increased, and, consequently, that the amount of deflection produced in a given time by a given pressure, diminished as the rotation was accelerated. Now, all disturbing forces which operate upon a projectile during its flight, must necessarily be of very short continuance, and can therefore have but little influence in diverting the axis when thus stiffened by rapid rotation.

I also found that a cylindrical bullet with tapered extremities, was more easily deflected than one of equal weight with flat or merely rounded ends, because the mean diameter of the bullet, and consequently the mean velocity of rotation, were thereby diminished. So far, therefore, as accuracy of flight depends upon the rigidity of the axis, it would appear that the nearest practicable approach to a plain cylinder is the most desirable form for a projectile, but there are other considerations which modify this conclusion.

It is also to be observed, that since the rigidity of the axis (relatively to the magnitude of the projectile) depends upon the mean velocity of rotation, the inclination of the spiral grooves in a rifled gun should vary inversely with the diameter of the bore. Thus, if one turn in eight feet be assumed as sufficient for a rifled bore of one inch in diameter, one turn in forty-eight feet should be sufficient for a bore of six inches, provided the same form of projectile be used.

The forms of bullet which I actually tried with the gun were exceedingly numerous, and the materials used for these bullets was in all cases lead hardened by an intermixture of antimony and tin; and the weight varied from two to three and a half pounds.

In trying these various bullets, a number of each kind was fired against a vertical bank at a distance of 435 yards. The gun was constantly pointed at the same object, and the closeness of the bullet-holes to each other was taken as the criterion of accuracy, while the drop below the level of the aim furnished an indication of comparative range.

The conclusions arrived at from these and other experiments may be concisely stated as follows:—

1st.—A pointed form at the front end of the bullet is unfavourable to accuracy of flight, unless the cylindrical part of the bullet be of considerable length; but, on the other hand, a pointed or conoidal form behind, has the effect of increasing the accuracy attained. This may be explained upon the very probable supposition that the blast from the mouth of the gun, impinging upon the rear of the bullet, will operate more unfavourably upon a flat or hollow end than upon a rounded or conical one.

2nd.—Increase of length in the cylindrical part of a bullet always increases precision; but, when carried beyond a certain limit, lessens the initial velocity, even where the charge is proportionately augmented.

Digitized by Google

3rd.—Both range and accuracy were affected in an important degree by the manner in which the bullet fitted the contraction in the gun. When the fitting part was in front of the bullet, the pressure of the gas operating upon its sides compressed it, and the same effect was produced, though in a less degree, when the conical, or rounded end at the back, projected too far into the powder chamber.

These effects were rendered apparent by inspection of bullets recovered after firing, many of which were found in nearly the precise condition in which they quitted the gun.

The bullet ultimately selected is a little longer and heavier than those experimented with, and differs from the pointed bullet, in being longer in the cylindrical part and having a coned, instead of a rounded, end behind; and although its drop in a range of 435 yards is considerably more than that of several of the shorter bullets, yet there is little doubt it will excel them in range at higher elevations of the gun; because I have found that a pointed front only operates in sustaining the flight of the bullet when the range is long; and a high initial velocity, which materially lessens the drop in short distances, does not produce the same effect, in a corresponding degree, when the distance is increased.

Great improvements were effected in the accuracy of the firing, by modifying the shape of the projectile; but although the experiments were very protracted, I feel that they require to be further prolonged in order to arrive at the greatest attainable perfection in the form of the bullet.

The ranges at different elevations were not ascertained with the form of bullet ultimately adopted, but, with a three-pound pointed bullet and charges of twelve ounces of powder, they were as follows:—

Ranges with the rifled gun and three-pound bullets.

Elevation.	Range in Yards.	
½°	408	Measured to first graze upon a plane about five feet below the centre of the gun.
1°	770	
2°	1,112	
3°	1,500	
4°	1,840	
5°	2,056	
6°	2,300	
7°	2,600	

The powder used was a mixture of blasting and "double-seal" powder in equal proportions. The distances given are in most cases averages of several shots; but in some instances they were only approximately determined. When the gun had more elevation than 7° the bullets could only be fired out to sea, and the range could not be ascertained.

By way of comparison with these results, an extract is here given from the last edition of Sir H. Douglas's "Naval Gunnery," specifying the ranges obtained with a 68-pounder throwing shot with full charges, which ranges, it will be seen, are, upon the whole, no greater than those of the three-pound bullet fired from the rifled gun:—

Ranges with a 68-pounder.

Elevation.	Range in Yards.
½°	340
1°	833
2°	1,247
3°	1,558
4°	1,737
5°	2,035
6°	2,337
7°	2,440

In trying the initial velocity of the shot by means of a ballistic pendulum, I was enabled to observe its penetrating power. When fired with charges of 13 oz. of powder, a 3 lb. bullet passed through 2 feet 2 inches of hard elm timber, and flattened against a cast-iron block forming the back of the pendulum. The initial velocity was similar to that generally obtained with round shot fired with proportionate charges, viz. about 1,550 feet per second.

In the course of the experiments made with the gun, upwards of 500 rounds were fired; and ample opportunity was thus afforded of judging as to the durability of the parts affected by the loading at the breech. At first the fitting surfaces which closed the bore were of unhardened steel; but these soon failed, being cut away in numerous small channels by the ignited gases. The steel was then hardened; but instead of being rendered more durable, it yielded to the action of the powder more rapidly

Digitized by Google

than before. Conceiving, therefore, that the erosion was not a mechanical action, but a chemical effect of combustion, and that a metal which was a better conductor of heat than steel or iron would be less liable to burn on the surface, I was led to substitute copper as the material of the parts affected, and no further difficulty was experienced. The copper fittings applied for this purpose consist of two annular pieces, one of which is screwed into the breach end of the gun, and the other fixed upon the breech-piece. These fittings can very easily and quickly be repaired, when necessary, by means of a tool provided for that purpose, and can also be removed and replaced by others kept in readiness for use; and there is nothing to prevent these operations being performed by the gunners when on service, if they be previously instructed.

The advantages of loading at the breech may be stated as follows:—

1st.—It permits of a bullet being used of a larger diameter than the bore, by which means accuracy of fit is secured, and the material of the bullet is forced into the grooves of the bore.

2nd.—Any ignited matter remaining in the gun after firing may with ease and certainty be removed, or, if left in the gun, it will be thrust forward from the part where its presence would be dangerous, by the insertion of the succeeding bullet.

3rd.—In the arrangement which I have adopted, the perishable part of the gun, viz. the vent and its vicinity is comprised in the moveable breech-piece, which may be easily replaced when worn or otherwise injured.

4th.—A rifled gun loaded at the breech may be more rapidly fired than a rifled gun loaded at the muzzle, because the fouling of the bore presents no impediment to the insertion of the bullet when introduced from behind; but as compared with smooth-bored ordnance of the ordinary description, there is probably nothing to gain in point of quickness of firing.

The gun was remarkably free from tendency to become heated by firing, a fact which can only be explained upon the supposition that the heating of a cannon is occasioned, not by the contact of the flame, but by some molecular action of the metal, produced by the explosion, and more effectually resisted by wrought-iron than by cast-iron or bronze; but possibly the compound structure of this gun may also operate to deaden vibration, and prevent the evil in question.

It may, perhaps, be objected to this gun, that from the smallness of the bore, it cannot be applied for throwing shells as well as solid projectiles; but the fact is, these two purposes are incompatible with each other, unless both be imperfectly attained, for while the one necessarily requires a large bore, the other demands a small one; and it therefore seems preferable to have separate guns specially adapted for each application. As a civilian, I speak with diffidence upon the advantages which I believe the long range of this description of field-gun will afford in its military application; but I may be permitted to observe, that the incident which chiefly contributed to direct my attention to this subject still appears to furnish a forcible illustration of its importance. I allude to the memorable service rendered at Inkermann, by means of two 18-pounders, laboriously dragged from the batteries, and ultimately directed with great gallantry and success against the Russian Artillery, at a distance from which the numerous but lighter guns of the enemy could not effectually reply. Now, these two battery guns were but a clumsy substitute for light long-range guns, which would have rendered the same important service with more promptitude and ease, and could have operated at a greater distance from the enemy's fire. It is, perhaps, chiefly as "guns of position," commanding important points at great but ascertained distances, that these rifled guns would be valuable, because long range can only be made available where distance can be determined, which it cannot easily be in the rapid operations for which "field-pieces" are employed. It is, therefore, as adjuncts to, and not as substitutes for, the present description of field ordnance that I propose the adoption of these guns; and when fully brought to perfection, I believe they will furnish a most important addition to the artillery of an army.

With respect to the construction of heavy ordnance by the process of twisting wrought-iron bars into cylinders and combining them in the manner described, there appears to be no great difficulty in so doing, if proper apparatus be provided for the purpose. It would not, however, be advisable (except in peculiar cases) to apply the principle of loading at the breech except to guns of small dimensions, because in heavy ordnance the moveable parts would become too cumbrous to be conveniently handled."

The essential features of the Armstrong method of construction are:—

1st.—The disposal of the fibre of the metal round the bore by coiling, so as to resist the tangential strain, the welds running in the direction of the least strain as regards their separation.

2nd.—The employment of a breech piece, to support the bottom of the bore, with the fibre running lengthwise so as to resist longitudinal strain.

Digitized by Google

3rd.—The shrinking on the different portions, so that the exterior of the gun takes a due share of the strain. Mr. Whitworth's method of building up is as follows:—"The tube of the gun is made taper, being in the 5½ inch-bore gun 1 inch larger in diameter at the breech end than at the muzzle end; then a series of hoops are made, which are screwed together so as to form another tube, that is put on by hydraulic pressure, each layer is put on a little tighter than the succeeding one."—*Evidence Report on Ordnance.*

The method of closing the bore of a built-up gun is an important question. The inner tubes of some of the large M. L. ordnance lately constructed in the Royal Gun Factories, as well as those of some of Blakely's guns, have what are termed closed ends, that is, the tube is not bored through to the bottom; the solid end of the tube in service guns is supported by a cascable screwed into the breech-piece, and in some of them also by a shoulder in the breech-piece. Sir W. Armstrong, Mr. Whitworth and Major Palliser use open tubes and close them by a plug of wrought-iron or copper. The cascable in the Whitworth guns is not, like Armstrong's, cylindrical in form, but is shaped into two or more (screwed) cylinders, their respective diameters increasing from bore to breech.

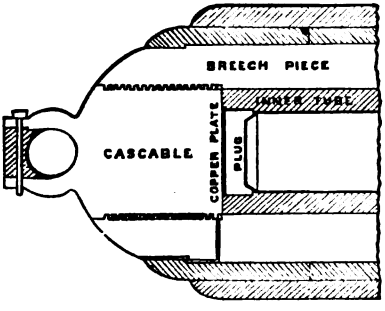

Breech of Armstrong's 10·5 inch gun.

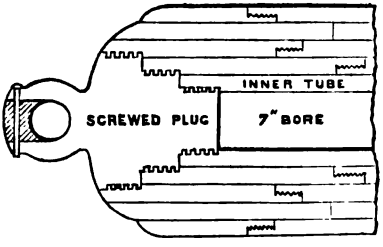

Breech of Whitworth's 7-inch gun.

In closing the bore of a M. L. or B. L. gun, one important principle should not be neglected, viz, that as the gas exerts an equal force in every direction the thickness of the metal should be as great, or nearly so, behind as over the charge. Inattention to this principle, or its sacrifice to other considerations, is a source of weakness in many B. L. guns. One advantage of an open end is, that the metal of the inner tube is relieved to some extent from longitudinal strain.

The relative cost of large ordnance made in different ways is approximately as follows:—

	£		
Cast-iron guns - - - - -	21	per ton.	
Armstrong built-up ditto - - -	100	,,	(lately £87.)
Krupp's steel ditto - - - - -	170	,,	
Gun metal ditto - - - - -	187	,,	

Bronze guns are valuable for recasting. Mr. Frazer has introduced modifications, by which it is said the cost of built-up ordnance will be much reduced, viz. to 40*l.* a ton with a coiled inner tube, and to 55*l.* a ton with a steel tube. Mr. Whitworth told the Committee on Ordnance that his 5½ inch gun weighing 4 tons, and made of homogeneous metal (soft steel) cost 700*l.* which is about 175*l.* per ton. The question of the relative advantages of breech and muzzle-loading ordnance has been frequently discussed. The subject appears very fairly put by Major C. H. Owen, Professor of Artillery, at Woolwich. He says:—"Various opinions are held as to the relative advantages of breech and muzzle-loading ordnance, but the latter would appear to be the best adapted to general service, as they are stronger for equal weights of metal and simpler in construction. The advantages of loading cannon at the breech are, that a projectile of larger diameter than the bore can be used, and its axis will consequently be stable; that the gun can be loaded when run up, the gunners being therefore less exposed, that the gun can be worked in a smaller space (than a M. L. piece); the clearing of the bore can be more readily effected, and any ignited sub-

Digitized by Google

stance left in the bore can be seen and removed, also there is no danger of the shot not being *home*. This plan, however, is attended with the following disadvantages, viz., that the construction is more complicated than that of a muzzle-loading piece; that if the gun be of large calibre, the breech-loading apparatus, when sufficiently strong and heavy, will be unwieldy; and that with the same weight of metal, the breech-loading is a weaker and less enduring construction than the muzzle-loading. On the other hand, a muzzle-loading gun has a simpler and stronger construction, but the gun detachments are more exposed than with a breech-loading gun, and if loaded carelessly, the shot may not be rammed *home*, in which case the metal of the gun may be fractured by the suddenly condensed gas."

On the Systems of Rifling.—Major Owen, R.A. one of our best authorities, writes:—"In what does a system of rifling consist. Essentially in the method of giving the rotatory motion to the projectile. This definition will not satisfy some inventors, who wish to claim a particular *twist* as a part of their *system of rifling*. It would, however, be quite as reasonable to claim a particular charge. The rotatory motion, as you all know, is given to prevent the projectile from turning over in flight; and the velocity of rotation required depends upon the form, length, and weight of the projectile, no matter what the system of rifling may be; in fact, the number of revolutions made by a shot $= \frac{\text{I. V.}}{\text{length of twist}}$, and therefore, with the same charge, the same twist must be obviously necessary.*

A twist, like a charge, may suit a particular rifled gun, but this is quite another thing. A *gaining twist* is advantageous, for, by employing it, the initial strain upon the gun is reduced, the rotatory motion not being given when the shot is set in motion, but gradually acquired as it moves down the bore. It is better to give rather more twist than is required under ordinary circumstances at the expense of a little extra strain; for should the twist be merely sufficient to impart the necessary rotatory motion with the service charge, the velocity of rotation will probably be too low with a reduced charge to keep the projectile steady in flight.†

The diameter of the bore has also been often mixed up with the system of rifling, with which it can have nothing whatever to do. As the diameter is decreased, so will the elongated projectile oppose a less surface (in proportion to its weight) to the resistance of the air, or that of the substance fired at; but, on the other hand, it will expose a less area to the force of the gas, and will therefore have a lower initial velocity; it will have less capacity as a shell; its cartridge must be elongated, thereby throwing the strain forward; the amount of powder that can be usefully employed will be less; and if the length of the bore be not increased, the expansion of the gas will be more limited. This question has been discussed, and should be thoroughly understood. In the table below the loss of initial velocity by decrease in the size of the bore is clearly shown:—

Ordnance.	Charge.	Projectile.		Initial Velocity.
		Weight.	Diameter.	
	lbs.	lbs.	inches.	
Britten's (32-pounder rifled) - -	5	50·36	6·24	1,209
Armstrong's 40-pounder - - -	- -	41·25	4·75	1,197
„ 3-grooved shunt - -	9	68·40	6·4	1,283
Whitworth's 70-pounder - - -	- -	68·56	{5·5 / 5·}	1,132
Armstrong's 70-pounder - - -	10	74·60	6·4	1,271
Whitworth's 70-pounder - - -	-	68·56	{·5 / 5·}	1,199

Mr. Whitworth and his admirers have constantly asserted that his small-bore gives a flatter trajectory than the larger bores chosen by Armstrong, Britten, and others. This is, however, not the case under all circumstances, and arose partly from the fact of the Whitworth guns first tried, being fired with charges of $\frac{1}{7}$th of the weight of the projectile, whereas the greater number of other rifled guns used charges of only $\frac{1}{8}$th or

* The Initial Velocity is very little effected by the system of rifling.

† This was particularly shown by the inaccurate practice of the 600-pounder, when fired with a small charge.

Digitized by Google

$\frac{1}{10}$th. Mr. Whitworth is quite right to use as large a charge as he can, but it must be taken into account in drawing comparisons. In practice from two rifled guns of different calibres, but firing projectiles of the same weight with equal charges, the large bore will give a lower trajectory; but as the projectile with the smaller diameter is less retarded, its trajectory will gradually become lower, as compared with the other, until beyond a certain range the small bore will give the lower trajectory. Small bores have found little favour on the continent, and it is for the authorities to demand either a large or a small bore as circumstances may require.

The following conditions are requisite in any rifled gun to ensure accuracy of fire:—a rotatory motion must be given to the projectile round an axis parallel to, or coincident with, that of the bore; and the velocity of rotation imparted to the projectile must be sufficient to counteract the pressure of air tending to turn the shot over or render it unsteady in flight.

Great numbers of rifled guns with projectiles to correspond have been proposed, but most of the systems of rifling that have been adopted by any service, or tried on the practice ground, may be divided into the following classes:—

(1) Muzzle or breech-loading guns, having projectiles of iron fitting the peculiar form of the bore mechanically.

(2) Muzzle-loading guns, with projectiles having soft metal studs or ribs to fit the grooves.

(3) Muzzle-loading guns, with projectiles having a soft metal envelope, coating, or cup, which is expanded by the gas in the bore.

(4) Breech-loading guns, with projectiles having a soft metal coating larger in diameter than the bore, but which is compressed by the gas to the form of the bore.

The effects of those guns, and consequently their relative values, will be best shown by extracting from the *Proceedings of the Royal Artillery Institution* some of the results as officially stated by the officers in charge of the experiments. The more important of the Targets have been selected, as representing the actual conditions of our ships at this time (1866), and of the power which can be brought to bear upon the armour-clad ships of an enemy.

Warrior Target.

This target was 10 ft. by 12 ft., consisted of three plates, made at the Park Head forge, all 4½ in. thick, and varying from 12 ft. by 3 ft. to 12 ft. by 3 ft. 4 in.

The Horsfall gun used weighed 24 tons 3 qrs. 2lbs., diameter of bore 13·014 in., diameter of shot 12·8 in. It was first fired at 200 yards range, with a solid cast-iron shot, weighing 279 lbs. and a charge of powder 74·40 lbs., which gave an initial velocity of 1,630 ft., reduced at 40 yards, to about 1,610 ft. per second.

The shot completely pierced the target through and through, making an irregular hole in the armour 2 feet square, and cracking but not buckling it.

From this and other similar experiments it appeared that the "Warrior" ship at 200 yards would be completely pierced by the Horsfall shot. A solid shot of annealed cast-iron weighing 285 lbs. was fired at the same target with the same charge as before, from a range of 800 yards. This grazed the ground 17 yards short, and struck the target in the junction of two plates, breaking a large hole about 2 feet square through the armour, and burying itself in the timber backing. This proves that at 800 yards the real "Warrior" would be severely injured, but the skin would would not be penetrated by an individual shot.

Mr. Whitworth made a series of experiments to prove the penetration of his projectiles. The shot and shell were fired from a 12-pounder breech-loader, a 70-pounder muzzle-loader and a 120-pounder muzzle-loader. Most of the shot and shell pierced the target; the following were the more remarkable results. A target was made in the form of a box, with the object of putting to the test Mr. Whitworth's boast that he could drive a shell through the side of an armour-clad ship, and make it burst between decks. The shell fired on this occasion, with an initial velocity of 1,275 feet, passed completely through the 4-inch armour plate and its oak backing, and exploded on the rear side of the box, the plate of which was indented 2½ in., bursting the box and blowing all six sides outwards.

A shell of homogeneous metal, weighing 127 lbs. with a bursting charge of 3 lbs. 8 oz. and without a fuze, was fired at the same range with a charge of 25 lbs. of powder, giving a terminal velocity of about 1,263 feet. This shell went completely through everything, much to the astonishment of every one present.

Some experiments were made on the "Warrior" target to prove the effect of steel shell fired from a 13·3" Armstrong M. L. wrought-iron shunt rifled gun at 2000 yards range. The initial velocity of the shell, with 51½ lbs. charge, is about 990 ft. and the striking velocity 940'.

Digitized by Google

Mean weight of shell empty	585 lbs.
Burster	24 „
Diameter of shell	13″24 „
Length { over all	23″
Length { of shell	19·75
Mean recoil	6ft. 1 in.

The third round struck about 10 yards short, and ricochetted on to centre of target, striking centre plate 4′ 2″ from left side; hole in plate 16″ × 13½″, centre plate started forward 6½″ at top and 4½″ at bottom on right side, and 3″ at top, and 0·5″ at bottom on left side, 11 armour-plate bolts started in centre plate and one in bottom plate. Upper plate blown off and lying at foot of target in front; all the bolts (except three) of this plate broken at nut—the three being drawn bodily out of the plate; bottom of upper plate, where shell entered, indented 1½″ in length of 1 ft. At the back ragged hole 4′ × 2′ 3″ between third and fourth ribs from right side; two ribs broken and forced out, second rib from right bulged, angle iron cracked; skin cracked and opened for length of 3′ below hole. Seventeen armour-plate holes, twenty-one rivets, and thirteen backing bolts broken. A great many splinters of iron, timber, bolt heads, &c., on raft. Shell on platform in rear of target broken up into four pieces.

The Bellerophon Target.

The part of the ship which was tested by the target is that situated between the main and lower decks, and not in the line of ports, the object being to test the strength of the general side of the ship. Special arrangements are made to strengthen the side in the vicinity of the ports, which will be few in number, as the "Bellerophon" carries a small number of very large guns. These few ports are strengthened by the introduction of additional iron to an extent which would not be practicable if the number of ports were large.

Each frame of the target was made of angle iron 10″ × 3½″ × ½″, and two angle irons 3½″ × 3½″ × ⅝″ rivetted together; to the double angle-irons of this frame the skin, which is composed of two thicknesses of ¾″ plating, making together 1½″, with a layer of painted canvas between, is riveted. On the outside of the skin plating, four horizontal angle-iron stringers are attached, two under the upper armour-plate 9½″ × 3½″ × ½″, the broad flange being square to the skin, and not reaching out to the armour by half an inch, the other two are placed behind the lower plate 10″ × 3½″ × ½″. The breadth of the broader flange being the same as the thickness of the backing, it reaches out to, and comes in contact with, the armour. Wood backing 10″ thick, is worked longitudinally on the skin plating and between the angle stringers, bolted with nut and screw bolts through the skin plating. The armour consists of two rolled plates, 6″ thick, manufactured at the Millwall works, weighing upwards of 9 tons each. The upper armour-plate is bolted with bolts 2½″ diameter and the lower plate with bolts 2¾″ diameter. In one half the target, divided vertically, the armour bolts have elastic washers and are clenched on single nuts. In the other half the bolts have common washers with double nuts, and bolts not clenched. In erecting the target, care was taken to support it behind with beam ends, &c., so that the actual condition of the proposed ship's side might be approximated to as closely as possible. All the portions of the target were carefully weighed, and the weight, as reported by the Admiralty overseer, was 389 lbs. per square foot.

The range was 200 yards, and the shot named below struck the target. The most decided effects were however produced by the guns named in the table on the next page:—

	lbs. weight.
From 10·5″ Armstrong rifled gun:—	
Spherical cast-iron solid shot, *one*	150
„ steel solid shot, *one*	165
Cylindrical cast-iron solid shot, *one*	308
From 7·1″ Ordnance Select Committee gun:—	
Steel shell, *one*	119
From 7″ Whitworth rifled gun:—	
Steel shell, *one*	149
From 5½″ Whitworth rifled gun:—	
Steel shell, *one*	69
From 110-pounder Armstrong breech-loading rifled gun:—	
Solid cast-iron shot, *four*	66¼ each.
From 68-ponnder smooth bore gun:—	
Solid cast iron shot, *three*	66½ „

Digitized by Google

Nature of Ordnance.	Weight in lbs. of Projectile.	Forms of Projectile.	Charge in lbs.	Remarks.
5½″ Whitworth gun.	69 Steel-shell.	*Cylindrical.* Bursting charge. 2 lbs. 6 oz.	12	Struck the lower plate 8″ from top and 5″ from right side, on a bolt; narrow crack on face of indent; armour-plate bolt driven in ½-inch; nut on bolt loose; one baulk of timber in backing split through.
10·5″ Armstrong gun.	150 Solid cast-iron shot.	*Spherical.* 10·36 diam.	35	Struck the upper plate 6″ from the lower edge on a bolt; plate cracked from bolt to bottom; crack 9″ long on face of indent; crack 10″ long and 1″ wide at 5″ from circumference of indent on right side; also two small cracks from bottom of plate at 5″ and 10″ respectively from left side of circumference; plate driven in 3½ at lower edge in length of 3′; plate started out 0·3″ at top on left side, and 0·2″ from lower plate. At the back a through armour-plate bolt driven out 2″; the heads of two backing bolts and one rivet broken off; one backing bolt driven out 1¼″; skin bulged slightly over area 1¼ square.
10·5″ Armstrong gun.	308 Solid cast-iron shot.	*Cylindrical.*	35	Struck the armour plate on the third bolt from the right side, lower row; plate driven in 2·1″ at bottom in a length of 5′; a crack 18″ long through a bolt hole at 2′ from impact plate started at 0·4″ from the backing on the right side for a length of 2′ at top. At the back one through armour-plate both driven out 2″, the heads of four rivets and one backing bolt broken off; vertical frame-piece cracked through and bent out slightly; beam-knee crushed; skin slightly bulged.
7″ Whitworth rifled-gun.	149·5 *Steel shell.*	*Cylindrical.* Bursting charge. 5 lbs. 8 oz. in flannel bag.	27	Struck lower plate; head of shell remained in hole; depth to nearest point of shell 9½ inches. At the back of the skin bulged at junction of skin plates, bottom plate 2″; upper plate 1″; rib bulged out 2″ at 2′ from ground; two deck knees separated from angle-iron 0·3; one armour-plate bolt, and three backing bolts broken; burst in backing.

Minotaur Target.

The armour is 5½ in. thick, the thickness of the teak backing is reduced from 18 in. as in the "Warrior" to 9 in., which is considered as equivalent to 1 in. of wrought iron. The target used July 7, 1862, constructed on those principles, presented a front of three armour-plates, one made by Messrs. Brown, of Sheffield, another by the Thames Iron Works, and the third by Messrs. Beale.

The guns used against this target were the 12-ton Armstrong muzzle-loading gun, throwing spherical 150 lb. cast-iron, and 162 lbs. wrought-iron shot, with 50 lb. charges of powder, the former having an initial velocity of 1750 ft. and the latter of about 1700 ft. per second; and a service 68-pounder throwing 67 lb. cast, and 71 lb. wrought-iron shot, with 16 lbs. of powder. The cast shot having an initial velocity of 1580 ft., the wrought-iron about 1530 ft. per second; all at 200 yards range. The first 150 lb. cast shot struck the Thames Iron Company's plate, and made a hole about a foot square through the armour, and bedded itself deep in the teak. The plate was buckled considerably, several bolts were started, two ribs cracked, the skin much bulged in, four bolts were broken, and a number of rivets.

Digitized by Google

The second 150 lb. shot struck the Sheffield plate, made a hole 13 in. by 12 in. in the armour, and sent pieces of the armour plate, shot, and teak, through a large irregular hole in the skin, the armour plate was buckled, three bolts broken, and other damage done. The third 150 lb. shot struck Messrs. Beale's plate, and did similar injury. These were the more important of the trials made upon this armour, proving that the powers of resistance in the "Minotaur" were inferior to those of the "Warrior."

The "Lord Warden" Target.

The target, 20 ft. by 9 in. represented the ordinary construction of a wooden ship, armour-plated, with the addition of a thick iron skin worked outside of the frame timbers of the ship. The following were the scantlings: frame timbers moulded 12½ in.; iron diagonal riders connecting the frame timbers, 6 in. by 1¼ in.; inner planking 8 in. thick; iron skin, 1¼ in. thick; outside planking, 8½ in. thick; rolled armour plates 20 ft. × 4 ft. 6 in. × 4·5 in. manufactured by the Millwall Company. The guns used were as follows:

	Weight. Tons.	cwt.	qrs.	lbs.
One 68-pounder smooth-bore muzzle-loading gun - -	0	95	0	0
One 9·22 in. muzzle-loading rifle gun 11 ft. long, 6 grooves	6	11	2	11
One 9·22 in. muzzle-loading rifled gun 13 ft. 3 in. long, 6 grooves - - - - - - - - - - -	12	2	2	0
One 10·5 in. muzzle-loading rifled gun 11 ft. 7 in. long, 10 grooves - - - - - - - - - - -	11	15	2	0
One 7 in. muzzle-loading rifled gun 10 ft. 9 in. long, 6 grooves - - - - - - - - - - -	6	13	3	0

The most remarkable effects were as follows:—

Nature of Ordnance.	Projectiles. Nature.	Weight in lbs.	Form and Diameter.	Charge in lbs.	Remarks.
10 ft. 5 in. Armstrong rifled gun.	Steel solid shot	168·25	*Spherical* 10·43	50	Struck upper plate 10 ft. from bottom, and 9′ 6″ from left side on a bolt, penetrated the armour-plate, making a hole in plate 11·5″ × 11, depth to surface of shot 12″, plate driven in 1′ 8″ at bottom; much damage was done at the back; two inner timbers were rent and splintered and thrust out, fragments projecting about 1′. Shot remained in hole apparently whole.
10 ft. 5 in. rifled gun.	Steel solid shot	301	*Cylindrical* 10·46	45	Struck at junction of plates 5′10″ from left of target; bolts at 15″, 13″, and 14″ from hole started 0·8″, 0·7″ and 0·4″ respectively; both plates laminated round the circumference of the hole, and two small cracks on front of lower plate from edge of hole. At the back, iron knee broken right off, and lower limb (4′ long with three bolts in it), driven 50′ to the rear. Area of damage 8′ × 4′, five or six plank bolts started and heads off; inner timbers rent in fragments and thrust out 1′ 6″; large splinters of wood scattered all around. Shot struck a large block of granite in rear, and broke itself into four pieces.

Digitized by Google

Some experiments were made to test the resistance of some rolled armour-plates made by Messrs. John Brown and Co., Sheffield.

The plates were of the following dimensions:—

One 13 ft. 4½ in., by 3 ft. 7 in., and 5½ in. thick.
One 12 „ 2¾ „ „ 3 „ 7½ „ „ 6½ „ „
One 11 „ 9 „ „ 3 „ 8½ „ „ 7½ „ „

They were secured by 2½ in. screw bolts, to the skin and frame of Mr. Samuda's old target; one half of each plate had a backing of from 7 in. to 9 in. of teak, and at the back of the other half, it was left hollow for an equal interval between the plates and the skin. India-rubber washers were used under the nuts.

The guns in position for trial, were:—

One 300-pounder Armstrong muzzle-loading shunt gun.
One 9-inch Lynall Thomas gun.
One 7-inch Whitworth rifle gun.
One 110-pounder Armstrong breech-loader.
One 68-pounder Service 95 cwt. gun.

All were fired at a range of 200 yards.

The first three shots (all cast-iron) were fired from the 68-pounder, one shot struck each plate and made indents 1½ in. deep in the 6½ in. and 7½ in. plates, and 2 in. deep in the 5½ in. plate.

These were followed by three shots from the 110-pounder, also of cast-iron; the indent upon the 5½ in. plate was 1·9 in. deep, that upon the 6½ in. was 2·05 in. deep, that upon the 7½ in. was 1·65 in. deep. There was scarcely any other effect visible.

The next shot was from the Armstrong 300-pounder, with a cylindrical steel shot weighing 301 lbs., and fired with a 45 lb. charge of powder. This shot had a velocity of 1295 ft. per second at 30 yards in front of the target, and struck the 7½ inch plate where it had the teak backing. The indent made was 6·2 in. deep, and its diameter about 12 in., or rather a circular piece of this diameter was driven in to a depth of 6·2 in., and nearly, if not quite, separated from the plate, which was of very good quality. There is, therefore, here a well defined measure of the full force of this shot. Besides this local effect, the target had evidently received a serious shake; one rib was cracked through and bent out, a number of small rivets were broken; the plate struck was buckled about 1½ in. and slightly cracked. The shot which rebounded from the target was set up about 2½ in., and was of excellent material.

A cylindrical steel shell, with a cast-iron head, made on a principle designed by Sir William Armstrong for the purpose of penetrating iron plates by directing the force of the explosion of the bursting charge *forward*, was next fired from the same gun. It weighed 288 lbs., had a bursting charge of 11 lbs., and was fired with a charge of 45 lbs. of powder, which gave at 25 yards in from the target, a velocity of 1320 ft. per second. It struck the 5½ in. plate on the part supported by the teak backing. It completely penetrated the armour-plate, leaving a hole about 14 in. in diameter, burst in the teak backing, tearing away the inner skin, and breaking a rib, and carried a shower of fragments and splinters in board. The teak was set on fire by the explosion, but easily extinguished; one bolt was broken, and other injuries done.

Altogether, for completeness of penetration and for the destructive effects which would have been produced both upon the ship and crew, this experiment carries with it great significance.

After this a cylindrical flat-headed homogeneous metal shell, weighing 148 lbs., with a bursting charge of 5 lbs 12 oz. was fired from the Whitworth 7 in. gun, with a charge of 25 lbs. of powder, which gave velocity at 30 yards in front of the target of 1265 ft. per second. This shell struck the 5½ in. plate near the hole made by the last Armstrong shell, punched out a clean cut hole about 9 in. in diameter, and burst in the teak backing; beyond blowing out some of the timber, it added very little indeed to the injury done by the Armstrong shell.

Lynall Thomas's 9-in. gun next missed the target with a round-headed solid steel shot weighing 327 lbs., fired with a charge of 50 lbs. of powder, which, at 546 ft. from the gun, gave a velocity of 1220 ft. per second.

The same gun next fired a wrought-iron solid flat-headed shot, weighing 302 lbs. with a charge of 50 lbs. of powder; the velocity of this shot was not obtained with certainty, it struck partly on the 6½ in. and partly on the 7½ in. armour; the greatest depth of impression on the latter plate was 6 in, and on the former 4 in. The 7½ in. plate was cracked through a bolt hole and round the indent, as was also the 6½ in. plate, but altogether the injury done was less than had been expected.

A hardened steel shot was next fired from the same gun; it weighed 330 lbs., was

Digitized by Google

round-headed, was fired with a charge of 50 lbs. of powder, which gave a velocity of 1220 ft. per second at 25 yards in front of the target. It struck close to the lower edge of the 7½ in. plate, and made an irregular indentation measuring about 1 ft. by 1 ft. 8 in., and 7 in. deep; two bolts were broken, one rib broken through, two others much bent, and the skin bulged in. The shot itself broke in half lengthways.

After this the 300-pounder Armstrong shunt gun fired a spherical wrought-iron solid shot, weighing 163 lbs. with a charge of 45 lbs., which at 30 yards in front of the target, gave a velocity of 1630 ft. per second. It struck the 7½ in. plate where it had no teak backing, and made an indent 3¾ in. deep, and 13 in. in diameter, with a crack on the face of the indent; the plate was considerably bulged in, and at the back it showed a large starred crack. The shot was flattened out to a diameter of 13 in.

The material of which these armour-plates was made proved itself to be of uniform and excellent quality.

The practical lessons to be learnt from such experiments seem to be these :—

1st. That guns are already in existence which can completely penetrate with shot the best 7½ in. armour that can be made, and which can, with shell, pierce the side of a ship built, as to frame, much more strongly than our best ship, and protected with our best 5½ in. armour.

2nd. That iron plates can now, with the improved manufacture of the country and the energy brought out by the occasion, be made of dimensions hitherto quite unattainable, and yet without losing anything in quality.

With the exception of America, other nations have done little or nothing in the manufacture of guns throwing projectiles over 100 lbs. in weight. The United States also boast the possession of two large rifled guns.

1st, an 8-inch gun, - - - 175 lb. projectile, 16 lbs. charge.
2nd, a 10 „ „ - - - 250 lb. „ 25 lbs. „

The following table gives the comparative values of the British muzzle-loading built-up ordnance, and the American smooth-bore ordnance.

British Muzzle-Loading Built-up Ordnance.

Gun.			Projectile.	
Nature.	Weight.	Charge.	Weight.	Burster.
	Tons.	lbs.	lbs.	lbs.
RIFLED :—				
13·3″ (600-pounder)	23	7	Steel shot - - 603 „ shell - - 585 Cast-iron shell - 554	24 42½
10·5″ 300-pounder	12	35	Steel shot - - 301 „ shell - - 297	15
9·2″ - - -	12	44	Steel shot - - 221 „ shell - - 206 Cast-iron shell - 202	11 15½
7″ L. S. - -	7	25	Steel shot - - 100 Cast-iron shot - - 100 „ „ shell - 93	7½
7″ N. S. - -	6½	25	Ditto.	
64-pounder - -	3¼	8	Cast-iron shot - - 63½ „ „ shell - 60	4½
SMOOTH-BORE :—				
150-pounder - -	12	40 35 20	Steel shot - - 168 Cast-iron shot - 150 „ „ shell - 104	6½
100-pounder - -	6	25 20 12	Steel shot. Cast-iron shot - - 94 „ „ shell - 66	

Digitized by Google

Smooth-Bore Cast Iron American Ordnance.

Gun.	Weight of Gun.	Charge.		Weight of shot.	Weight of shell.	Bursting charge of shell.
		Service.	Minimum.			
	Tons.	lbs.	lbs.	lbs.	lbs.	lbs.
20 in. L. S. - -	51·42	100	- -	1,000		
„ N. S. - -	44·64	100	- -	1,000		
15 in. L. S. - -	21·91	50	- -	440	330	17
„ N. S. - -	18·75	35	60	400		
13 in. L. S. - -	14·61	30	- -	300	224	7
„ N. S. - -	16·07	40	- -	280	224	
11 in. N. S. - -	7·14	15	20	170	130	
10 in. L. S. - -	6·72	15 shell / 18 shot	- -	172½	100	3
„ N. S. - -	5·35	12½	16	125	100	
„ N. S. - - (or 125-pounder)	7·36	40	- -	125	100	

All cast hollow except the 10 in. of 5·35 tons.

All shell guns except 10 in. 125-pounder.

20 in. gun only, at present experimental.

Solid shot are only to be fired from the 15 in. N. S. gun at iron-clad vessels, and then with 50 lbs.; 20 rounds may, however, be fired with 60 lbs.

The S. B. guns are formidable weapons, although they are merely cast-iron shell guns. Our guns being made of wrought-iron will not, on failure, break up like cast-iron or steel ordnance; and from their accuracy of fire, the capacity of their shells, and the power these latter have of maintaining a comparatively high velocity (in consequence of their elongated form) the British are in all probability greatly superior as weapons to the American guns.

Professor Major Owen, R.A., has ably dealt with the following important question.

"One of the most important questions at the present time is this: are monster guns required? Opinions are divided; but let us turn to facts, and see what has been done. I have endeavoured in the following table, to arrange some of the leading facts in order, so as to give an idea (necessarily a rough one) of the projectiles and charges necessary to actually penetrate certain structures at different ranges. I have not chosen the targets in preference to any others, but simply believing that they represent the average resistance offered by sea-going vessels, and also for convenience of comparison."

Target Penetrated by Steel Elongated Projectiles.

Range.	Weight of gun.	Projectiles.		Charge.	Target.
		Nature.	Diameter.		
yards.	cwts.	lbs.	in.	lbs.	
200 - - -	8	12 shot	3	1¾	2½" iron plate.
„ - - -	„	12 shell	„	„	2½" iron plate and 12" wood backing.
„ - - -	81	110 shot	7	12	5½ iron plate.
„ - - -	134	104 „	„	25	Warrior.
600 - - -	148	130 „	6·4	25	„
	tons.				
800 - - -		130 „	„	27	„
1500* - - -	12	221 „	9·2	44	Small plate.‡
„ † - - -	„	301 „	10·5	45	„ „
2000 - - -	22	610 shel	13	70	Warrior.

* Ascertained for this range by using a 30lbs. charge at 200 yards.

† Ascertained for this range by using a 35lbs. charge at 200 yards.

‡ 5½ inches of iron and 27" of wood; the wood and iron not disposed in such an advantageous manner for resistance as in the "Warrior" target.

Digitized by Google

"It appears then, from what has been already accomplished, that there is at present no occasion to employ monster ordnance for the destruction of ordinary plated vessels."

"The guns we are now making, which will throw projectiles of 200 or 300 lbs. weight with charges of 45 lbs. are, if properly used, which no doubt they will be, quite sufficient for the purpose. Further than this, however, it is probable that few iron-plated sea-going vessels (now afloat) could withstand the fire of our rifled 7″ guns of 130 cwt., fired with 25 lbs. charges, at 800 or even 1,000 yards range; * for we must remember that in actual warfare, vessels are constantly subjected to a continual fire, and not merely a few blows delivered at certain intervals of time; and that a structure may thus be kept in a constant state of vibration by the repeated impacts of shots, and will offer less resistance than when time is allowed between the rounds, for the metal of the armour to resume its former condition of repose. We should also remember that the few plates upon which experiments are usually made, are in all probability of sounder construction than those produced in quantities for the plating of several vessels; also that when a ship has been for some time at sea, and may in addition have been in action, the armour (bolt plates and fastenings) will have been subjected to many shocks and strains, and will, therefore, have been considerably weakened."

SHELLS.—The hollow explosive projectiles that we call shells or bombs are a very old invention. Under the name of "coininges," they consisted of rudely formed globes of plate iron soldered together, filled with gunpowder and all sorts of miscellaneous "mitraille." These were thrown to short distances both from "pierriers" (a sort of mortar) and from catapultæ, as early as 1495 at Naples, 1590 at Padua, 1520 at Heilsberg, 1522 at Rhodes, and 1542 at Boulogne, Liège. About the middle of the 15th century bombs of cast iron seem to have come into use; an Englishman, named Malthus, learned the art of throwing them from the Dutch, and perfected the system for the French armies — being the first to throw shells in France, at the siege of La Mothe, in 1643. The diameter of the bomb seems at that time to have become fixed at 13 inches — the old Paris foot; and at this it remains (with very few exceptional cases) down to the present day.

A few attempts to increase the size and power of these projectiles have been made at different periods, but never with the practical skill necessary to success; for example, 18-inch shells were thrown by the French, at the siege of Tournay, in 1745; whereas, just a century before, the Swedes threw shells of 462 lbs. weight, and holding 40 lbs. of powder. The French, when they occupied Algiers in 1830, found numbers of old shells of nearly 900 lbs. in weight; and in almost every arsenal and fortress in Europe one or two old 16-inch and 18-inch shells are to be found. No attempt was made in modern days to realise the vast accession of power that such large shells confer, until the year 1832, when the "monster mortar," as it was then called, of 24 inches calibre, designed by Colonel Paixhans (the author of the Paixhans gun), was constructed by order of Baron Evain, the Belgian minister of war, and attempted to be used by the French at the siege of the citadel at Antwerp, but with the worst possible success. The mortar, a crude cylindrical mass of cast iron, sunk in a bed of timber weighing about 8 tons, and provided neither with adequate means for "laying" it, nor for charging it — the heavy shells weighing, when filled with 99 lbs. of powder, 1015 lbs. each — could with difficulty be fired three rounds in two hours, while the shells themselves were very badly proportioned.

One of these shells fell nearly close to the powder magazine, but did not explode; had it fallen upon the presumed bomb-proof arch of the magazine, containing 300,000 lbs. of powder, it would have pierced it, according to the opinion of all the military engineers present at the siege; and so closed the enterprise at a blow. The ill success of this mortar prevented for several years any attempt to develope bombs into their legitimate office — as the means of suddenly transferring mines into the body of fortified places — of a power adequate to act with decisive effect upon their works; although some years afterwards a 20-inch mortar was made in England for the Pacha of Egypt and proved at Woolwich.

But another circumstance still more tended to the neglect of large shells thrown by vertical fire. After repeated trials and many failures, it was found practicable to throw 10-inch (and since that even 13-inch) shells from cannon, or "shell guns," by projecting them nearly horizontally, or at such low angles that they should "ricochet" and roll along the ground before they burst; and, thus fired, it was soon seen that their destructive power *as against troops* was greater than if fired at angles approaching 45° of elevation from mortars. Paixhans and his school had pushed a

* The result of a recent experiment shows "that a structure such as the 'Warrior' can be penetrated at 200 yards range with elongated shot, and shot cast in chill when the form of the latter is elliptical, fired from a 7″ rifled gun with 25 charges;" and the report adds, "but it is probable that had the 7″ steel shot been elliptical-headed, instead of hemispherical-headed, penetration would also be effected at the longer range (1200 yards.")

Digitized by Google

good and useful invention beyond its proper limits, and had lost sight wholly of the all-important fact, that horizontal shell fire, powerful as it is against troops or shipping, is all but useless as an instrument of destruction to the works (the earthwork and masonry, &c.) of fortified places; for this end, weight and the penetrative power due to the velocity of descent in falling from a great height are indispensable.

A 13-inch shell, weighing about 180 lbs., is thrown, by a charge of 30 lbs. of powder, barely 4700 yards. While, with not much more than double this amount of powder, the 36-inch shell, of more than 14 times its weight, can be thrown 2650 yards, or much more than half the distance.

The explosive power, it is obvious, is approximately proportionate to the weight of powder; but, by calculations, of which the result only can here be given, Mr. Mallet has shown that the total power of demolition—that is to say, the absolute amount of damage done in throwing down buildings, walls, &c. &c.—by one 39-inch shell is 1600 times that possible to be done by one 13-inch shell; and that an object which a 13-inch shell could just overturn at one yard from its centre, will be overthrown by the 36-inch shell at 40 yards' distance.

A 13-inch shell penetrates, on falling upon compact earth, about 2½ feet. The Antwerp shell penetrated 7 feet. The 36-inch shell penetrated 16 to 18 feet. The funnel-shaped cavity, or "crater," of earth blown out by the explosion of a buried shell, is always a similar figure, called a "paraboloid;" its diameter at the surface, produced by the 13-inch shell, is about 7 feet, and by the 36-inch shell about 40 feet.

No bomb-proof arch (so called) now exists in Europe capable of resisting the tremendous fall of such masses, and the terrible powers of their explosion when 480 lbs. of powder, fired to the very best advantage, puts in motion the fragments of more than a ton of iron. No precautions are possible in a fortress; no splinter-proof, no ordinary vaulting, perhaps no casemate, exists capable of resisting their fall and explosion. Such a shell would sink the largest ship or floating battery.

A single 36-inch shell in flight costs 25*l.*, and a single 13-inch 2*l.* 2*s.*, yet the former is the *cheaper* projectile; for, according to Mr. Mallet's calculations, to transfer to the point of effect the same weight of bursting powder, we must give—

55 shells of 13 inches, at 2*l.* 2*s.* - - - - - -	£115 10 0
Against 1 shell of 36 inches - - - - - - -	25 0 0
Showing a saving in favour of the large shell of - -	£90 10 0

In 1864 we exported:—

	Cwts.	Value.
Cannons and Mortars - - - - - -	27,662	£59,154
Cannons and Mortars, mounted or accompanied with carriages, and other fire-arms - - - -		46,833
Shot of iron, including shells - - - -	10·906	23,299

ARTIFICIAL STONE. See STONE, ARTIFICIAL.

ARUM VULGARE. *A. maculatum; The Wake-robin; Lords and Ladies.* In the island of Portland a kind of arrow root was prepared from this plant. See ARROW ROOT.

ASBESTOS, from ἄσβεστος, *unconsumable.* (*Asbeste*, Fr.; *Asbest*, Germ.) When the fibres of the fibrous varieties of amphibole are so slender as to be flexible, it is called asbestos, or amianthus. It is found in Piedmont, Savoy, Salzburg, the Tyrol, Dauphiné, Hungary, Silesia; also in Corsica so abundantly as to have been made use of by Dolomieu for packing minerals; in the United States, St. Kevern in Cornwall, in Aberdeenshire, in some of the islands north of Scotland, and Greenland. Asbestus was manufactured into cloth by the ancients, who were well acquainted with its incombustibility. This cloth was used for napkins, which could be cleansed by throwing them into the fire; it was also used as the wick for lamps in the ancient temples; and it is now used for the same purpose by the natives of Greenland. It has been proposed to make paper of this fibrous substance, for the preservation of important matters. An Italian, Chevalier Aldini, constructed pieces of dress which are incombustible. Those for the body, arms, and legs were formed out of strong cloth steeped in a solution of alum; while those for the head, hands, and feet were made of cloth of asbestus. A piece of ancient asbestus cloth, preserved in the Vatican, appears to have been formed by mixing asbestus with other fibrous substances; but M. Aldini has executed a piece of nearly the same size, which is superior to it, as it contains no foreign substance. The fibres were prevented from breaking by the action of steam. The cloth is made loose in its fabric, and the threads are about the fiftieth of an inch in diameter. The Society of Encouragement, of Paris, has proposed a prize for the improvement of asbestus cloth. The use of it was publicly exhibited in London in 1858.

Digitized by Google

Common Asbestos is found in fibres of a dull greenish colour and of a somewhat pearly lustre. In the Serpentine formations at the Lizard Point, in Cornwall, it is common. Dr. M'Culloch found it in the limestone of Glentilt in a pasty state, but it hardened upon exposure.

Mountain Leather, or *Mountain Paper*, is not in parallel fibres like the preceding, but the fibres are interwoven. The thinner pieces bear the latter name. Wanlock Head is the best known locality in this country.

Elastic Asbestos, or *Mountain Cork*, floats on water. It has, like the preceding, an interlaced fibrous texture. It varies in colour, being white, grey, yellow, or brown. In appearance and feel it is not unlike common cork, and it has a certain degree of elasticity, hence its name.

Mountain Wood, or *Ligniform Asbestos*. This variety is usually massive, and of a brown colour, having much the appearance of wood. It is found in several localities in Scotland.

ASH. (*Fraxinus excelsa.*) Ash is superior to any other British wood for its toughness and elasticity. It is therefore used for the frames of machines, for agricultural implements, and the felloes of wheels. This wood is split into pieces for the springs of bleachers' rubbing boards. Handspikes, hammer handles, rails for chairs, &c., are made from the ash. All these and similar works are much stronger when they follow the natural fibre of the wood. Hoops are also frequently made of the young branches of the ash. Rankine gives its tenacity as 17,000, and its modulus of elasticity, or resistance to stretching, as 1,600,000.

ASHES. In commerce, the word ashes is applied to the ashes of vegetable substances from which the alkalis are obtained, as KELP, BARILLA, &c. (*which see.*)

It is the popular name of the vegetable alkali, potash, in an impure state, as procured from the ashes of plants by lixiviation and evaporation. The plants which yield the greatest quantity of potash are wormwood and furmitory. See POTASH, PEARLASH, and, for the mode of determining the value of ashes, ALKALIMETRY.

Commercially ashes are divided into soap ashes, wood ashes, (*vedasse*, Fr.; *waidasche*, Germ.), and weed ashes. Our importations have been as follows:—

Imported.	Alkali, viz. Ashes, Pearl and Pot. Cwts.	Other sorts. Tons.
1859	155,663	917
1860	141,087	616
1861	129,048	1,297
1862	161,113	941
1863	176,334	1,158

In 1863, 42,362 cwts. of this was brought from the North Atlantic ports of the United States; and 133,301 cwts. from British North America.

Pearl and pot ashes in 1864:—

	Cwts.	Computed real value. £
From United States, North Atlantic Ports	32,130	51,302
British North America	141,627	219,402
Other parts	2,570	4,010
	176,327	274,714

Of other sorts unenumerated:—

	Cwts.	£
From Prussia	621	280
Hamburg	2,459	983
France	957	640
United States: North Atlantic Ports	766	110
Other parts	223	222
	5,026	2,235

During the same year 1864, of Foreign and Colonial *produce* we exported:—

	Cwts.	£
Pearl and Pot Ashes	4,324	6,738
Unenumerated Ashes	100	200

ASHES OF PLANTS. The ashes of all species of woods and weeds are found to contain some alkali, hence it is that the residuary matter, after the combustion of any vegetable matter, acts as a stimulant to vegetable growth.

The following analyses of the ashes of plants have been selected from the tables which have been published, by Messrs. Thomas Way and G. Ogston, in the "Journal of the Agricultural Society":—

Digitized by Google

	Peas.	Beans.	Red Clover.	Sainfoin.	Wheat Grain.	Straw.	Barley.	Oats.	Turnip Root.	Turnip Leaves.	Beet Root.	Carrot Root.
Potassa	42·43	36·72	18·44	31·90	29·76	10·51	20·07	17·70	23·70	11·56	21·68	37·55
Soda	3·27	0·14	2·79	-	5·26	1·03	4·56	3·84	14·75	12·43	3·13	12·63
Lime	5·73	12·06	35·02	24·30	2·88	5·91	1·48	3·54	11·82	28·49	1·90	9·76
Magnesia	5·92	6·00	11·91	5 03	11·06	1·25	7·45	7·33	3·28	2·62	1·79	3·78
Sesquioxide of Iron	0·44	0·65	0·98	0·61	0·23	0·07	0·51	0·49	0·47	3·02	0·82	6·74
Sulphuric acid	6·22	4·28	3·91	3·28	0·11	2·14	0·79	1·10	16·13	10·26	3·14	6·34
Silica	1·74	1·52	4·03	3·22	2·23	73·57	32·73	38·48	2·69	8·04	1·40	0·76
Carbonic acid	4·38	1·63	12·92	15·20	0·22	-	-	-	10·47	6·18	15·23	15·15
Phosphoric acid	29·92	33·74	5·82	9·35	48·21	5·51	31·69	26·46	9·31	4·85	1·65	8·37
Chlorids of potassium	-	-	-	-	6·24	-	-	-	0·92			
Chloride of sodium	-	3·26	4·13	0·78	-	-	-	-	-	7·05	12·41	49·51	4·91
Total amount	99·96	100·00	99·95	99·96	99·96	99·99	99·98	99·96	99·93	99·96	99·96	99·99
Per-centage of ash in the dry substance	2·60	2·90	7·87	6·37	2·05	-	-	2·50	2·50	6·00	16·40	11·32	5 12
Per-centage of ash in the fresh substance	2·24	2·54	6·77	5·65	1·81	-	-	2·25	2·27	0·75	1·97	1·02	0·77

A few additional analyses, by Prof. Way and other chemists, are given for the purpose of showing the variations which exist in the constituents of plants as determined by the analysis of their ashes.

	Potatoes.*	Lettuce Leaves and Stalk.†	Olive-tree Wood.‡	Hops.§	Hay.‖	Sprouts: Clupea Sprotus.¶
Potassa	25·41	22·37	20·60	24·88	11·93	17·23
Soda	-	18·50	-	-	1·07	1·19
Lime	2·34	10·43	63·02	21·59	14·76	23·57
Magnesia	4·17	5·68	2·31	4·69	5·30	3·01
Sesquioxide of Iron	0·50	2·82	-	1·75	2·75	0·28
Sulphuric Acid	4·71	3·85	3·09	7·27	0·20	
Silica	3·64	11·86	3·82	19·71	53·43	
Carbonic Acid	-	-	-	2·17		
Phosphoric Acid	10·38	9·38	4·77	14·47	6·34	43·52
Chloride of Potassium	12·40	-	1·09			
Chloride of Sodium	trace.	15·09	-	3·42	2·27	11·19
Total Amount	100·00	99·99	100·00	99·95	100·00	100·00
Per-centage of Ash in the dry substance	4·86	-	0·58	5·95	6·97	
Per-centage of Ash in the fresh substance	-	-	-	-	6·15	

* Griepenkerl. † Griepenkerl. ‡ A. Müller. § Way. ‖ Hubert. ¶ Way.

The large amount of silica found in the grasses, constituting, as it does, their outer coating, cannot fail to be noticed. The variations in the quantities of phosphoric acid are instructive.

ASHLAR. When stones are worked in regular beds and joints, and are dressed for facing work, they are called ashlar. The stone used as ashlar is called *ashlaring*, when in thin slabs, and made to serve merely as a case to the regular body of the wall.

ASPARAGINE. ($C^8\ H^8\ N^2\ O^6 + 2$ Aq. *Syn.* Asparamide, malamide, altheine. A beautifully crystallised substance, first found in asparagus juice, by Vauquelin and Robiquet, in 1805. It not only exists in a great number of vegetables, but some which do not contain it naturally may be made to afford it by being grown in dark damp cellars. Many plants normally containing only small quantities of it may be made to yield more by being allowed to germinate in that manner. Among the vegetables from which it can be directly obtained may be mentioned the following:—*Althæa officinalis, Asparagus acutifolius, A. off., Atropa belladonna, Convallaria majalis, C. multiflora, Cynodon dactylon, Glycyrrhiza glabra, Lactuca sativa, Ornithogalum*

Digitized by Google

caudatum, *Paris quadrifolia*, *Robinia pseudacacia*, *Solanum tuberosum*, and *Symphytum off.* The following list contains the names of some plants normally containing no asparagine, but yielding it when allowed to germinate in darkness in damp cellars :—*Colutea arborescens*, *Cytisus laburnum*, *Ervum lens*, *Genista juncea*, *Hedysarum onobrychis*, *Lathyrus odoratus*, *L. latifolius*, *Phaseolus vulgaris*, *Pisum sativum*, *Trifolium pratense*, *Vicia Faba*, and *V. sativa.*

Preparation.—Perhaps the most convenient and economical mode of procuring asparagine is from the etiolated (blanched) shoots of vetches. When they have acquired a length of two inches—which, under favourable circumstances, will be in about three weeks—they are to be crushed, and the juice pressed out. The quantity yielded will be rather less than three-fourths of the weight of the plant. It is then to be boiled for a short time, to coagulate the vegetable albumen, and strained. This clarified fluid is to be evaporated until almost syrupy, and put aside to crystallise. The product is at first brown, but by washing with cold water, afterwards dissolving in boiling water, and subsequent crystallisation, it may be obtained pure. If, previous to putting the hot fluid aside to crystallise, a little pure animal charcoal be added, and the whole be digested a short time, and then filtered, the crystals will be obtained brilliantly white at one operation. Some chemists advise the germination to be allowed to go much further than was mentioned above, so that the shoots may be as long as 15 inches. The crystals obtained by the process given have the formula $C^8\ H^8\ N^2\ O^6 + 2$ Aq., but the water is expelled at 212°. Asparagine possesses the peculiarity of behaving like a base towards strong oxides and like an acid towards bases. The crystals obtained by the method given contain, in the 100 parts, carbon 32·00, hydrogen 6·67, nitrogen 18·67, oxygen 42·66. Dried at 212°, it has the following composition: carbon 36·36, hydrogen 6·06, nitrogen 21·21, oxygen 36·37.—C. G. W.

ASPHALTENE. A product obtained from asphaltum by volatilising the oily and volatile product *petrolene.*

ASPHALTIC MASTIC, used in Paris for large works, is brought down the Rhone from Pyrimont, near Lyssell. It is composed of nearly pure carbonate of lime, and about 9 or 10 per cent. of bitumen.

When in a state of powder it is mixed with about 7 per cent. of bitumen or mineral pitch, found near the same spot. The powdered asphalt is mixed with the bitumen in a melted state along with clean gravel, and consistency is given to pour it into moulds. Sulphur added to about 1 per cent. makes it very brittle. The asphalt is ductile, and has elasticity to enable it, with the small stones sifted upon it, to resist ordinary wear. Walls having cracked, and parts having fallen, the asphalte has been seen to stretch and not crack. It has been regarded as a sort of mineral leather. The sun and rain do not appear to affect it; and it answers for *abattoirs* and barracks, keeps vermin down, and is uninjured by the kicking of horses.

ASPHALT OIL. An oil obtained from asphaltum by dry distillation.

ASPHALTUM. (*Bitume* or *Asphalte*, Fr. ; *Asphalt*, Germ.) Mineral Pitch; so called from the lake Asphaltites; a variety of bitumen, arising from one of the many peculiar changes of vegetable matter. Asphaltum, in common with other varieties of bitumen, is a form of hydrocarbon produced in the interior of the earth by the transformation of carbonaceous matter, like all combustible bodies of the same class. Composition $C^6\ H^3$. It is a solid black or brownish-black substance, possessing a bright conchoidal fracture. It fuses at 212° F., burning with a brilliant flame and emitting a bituminous odour. Specific gravity=1 to 1·2. Asphaltum is insoluble in alcohol, but soluble in about five times its weight of naphtha. See BITUMEN, JEWS' PITCH, NAPHTHA.

This solid shining bitumen, of a deep black colour when broken, is found in many parts of Egypt. A thin piece appears of a reddish colour when held to the light; when cold, it has no odour; by a moderate heat or by friction, the odour is slightly fully heated, it liquifies, swells, and burns with a thick smoke; the odour given is acrid, strong, and disagreeable.

In the arts, asphaltum is used as a component of japan varnish. It is likewise employed as a cement for lining cisterns, and for pavements, as a substitute for flag stones.—H. W. B.

ASPHALTUM, GAS TAR, or ARTIFICIAL. When, with the thick pitchy residue, obtained by evaporating off the more volatile portions of gas, tar, sand, chalk or lime are mixed, it is called artificial asphaltum. The mineral substances are strongly heated to expel all moisture, and then added to the pitch while in the melted state. This is used for pavements, for lining tanks, &c.

The following quantities of Asphaltum, or *Bitumen Judaicum*, were *imported* into

Digitized by Google

Great Britain—in 1855, 1674 tons; in 1856, 2707 tons, of which 2573 tons were from France.

ASSAFŒTIDA. (*Assus*, dried; *fœtidus*, fetid). A fetid gum resin obtained from the root of the *Narthex Assafœtida*.

ASSAY and ASSAYING. (*Coupellation*, Fr.; *Abtreiben auf der capelle*, Germ.) This is the process by which the quality of gold and silver bullion, coin, plate, or trinkets is ascertained with precision.

The art of assaying gold and silver *by the cupel* is founded upon the feeble affinity which these metals have for oxygen, in comparison with copper, tin, and the other cheaper metals; and on the tendency which the latter metals have to oxidise rapidly in contact with lead at a high temperature, and sink with it into any porous earthy vessel in a thin glassy or vitriform state. The porous vessel may be made either of wood-ashes, freed from their soluble matter by washing with water; or, preferably, of burned bones reduced to a fine powder.

Quantity of Lead to be employed for Alloys (M. D'Arcet).

Alloy.		Lead for 1 of Alloy.	Ratio of the Copper to the Lead.
Silver.	Copper.		
1000	0	$\frac{3}{10}$	0
950	50	3	1 : 60
900	100	7	1 : 70
800	200	10	1 : 50
700	300	12	1 : 40
600	400	14	1 : 35
500	500	16 or 17	1 : 32
400	600	16—17	1 : 26·7
300	700	16—17	1 : 22·9
200	800	16—17	1 : 20
100	900	16—17	1 : 17·8
0	1000	16—17	1 : 16

Bismuth may be used as a substitute for lead in cupellation; two parts of it being nearly equivalent to three of lead. But its higher price will prevent its general introduction among assay masters.

We begin this assay process by weighing, in a delicate balance, a certain weight of the metallic alloy; a gramme (= 15·432 gr.) is usually taken in France, and 12 grains in this country. This weight is wrapped up in a slip of lead foil or paper, should it consist of several fragments. This small parcel, thus enveloped, is then laid in a watch glass or a capsule of copper, and there is added to it the proportion of lead suited to the quality of alloy to be assayed; there being less lead, the finer the silver is presumed to be. Those who are much in the habit of cupellation can make good guesses in this way; though it is still guess-work, and often leads to considerable error, for if too much lead be used for the proportion of baser metal present, a portion of the silver is wasted; but if too little, then the whole of the copper, &c. is not carried off, and the button of fine silver remains more or less impure. The most expert and experienced assayer by the cupel produces merely a series of approximate conjectural results, which fall short of chemical demonstration and certainty in every instance. The lead must be, in all cases, entirely free from silver, being such as has been revived from pure litharge; otherwise errors of the most serious kind would be occasioned in the assays.

The best cupels weigh 12½ grammes, or 193 grains. The cupels allow the fused oxides to flow through them as through a fine sieve, but are impermeable to the particles of metals; and thus the former pass readily down into their substance, while the latter remain upon their surface; a phenomenon owing to the circumstance of the glassy oxides moistening, as it were, the bone-ash powder, whereas the metals can contract no adherence with it. Hence also the liquid metals preserve a hemispherical shape in the cupels, as quicksilver does in a cup of glass, while the fused oxide spreads over, and penetrates their substance, like water. A cupel may be regarded, in some measure, as a filter permeable only to certain liquids.

If we put into a cupel, therefore, two metals, of which the one is unalterable in the air, the other susceptible of oxidisement, and of producing a very fusible oxide, it is obvious that, by exposing both to a proper degree of heat, we shall succeed in separating them. We should also succeed, though the oxide were infusible, by placing it in contact with another one, which may render it fusible. In both cases, however,

Digitized by Google

the metal from which we wish to part the oxides must not be volatile; it should also melt, and form a button at the heat of cupellation; for otherwise it would continue disseminated, attached to the portion of oxide spread over the cupel, and incapable of being collected.

The furnace and implements used for assaying in the Royal Mint and Goldsmiths' Hall, in the city of London, are the following:—

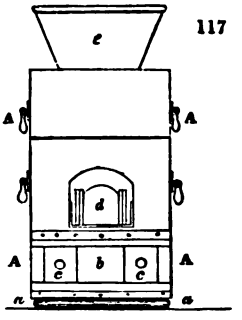

A A A A (*fig.* 117) is a front elevation of an assay furnace; *a a*, a view of one of the two iron rollers on which the furnace rests, and by means of which it is moved forward or backward; *b*, the ash-pit; *c c* are the ash-pit dampers, which are moved in a horizontal direction towards each other for regulating the draught of the furnace; *d*, the door, or opening, by which the cupels and assays are introduced into the muffle; *e*, a movable funnel or chimney by which the draught of the furnace is increased.

B B B B (*fig.* 118) is a perpendicular section of *fig.* 117; *a a*, end view of the rollers; *b*, the ash-pit; *c*, one of the ash-pit dampers; *d*, the grate, over which is the plate upon which the muffle rests, and which is covered with loam nearly one inch thick; *f*, the muffle in section, representing the situation of the cupels; *g*, the mouth-plate, and upon it are laid pieces of charcoal, which, during the process, are ignited, and heat the air that is allowed to pass over the cupels, as will be more fully explained in the sequel; *h*, the interior of the furnace, exhibiting the fuel.

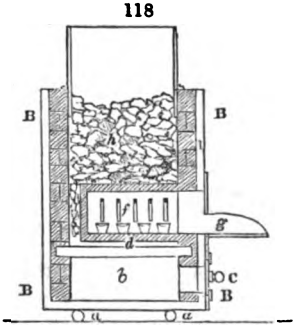

The total height of the furnace is 2 feet 6¼ inches; from the bottom to the grate, 6 inches; the grate, muffle, plate, and bed of loam, with which it is covered, 3 inches; from the upper surface of the grate to the commencement of the funnel *e*, *fig.* 117, 21¼ inches; the funnel *e*, 6 inches. The square of the furnace which receives the muffle and fuel is 11¾ inches by 15 inches. The external sides of the furnace are made of plates of wrought iron, and are lined with a 2-inch fire-brick.

C C C C (*fig.* 119) is a horizontal section of the furnace over the grate, showing the width of the mouth-piece, or plate of wrought iron, which is 6 inches, and the opening which receives the muffle-plate.

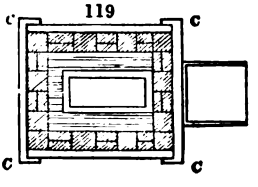

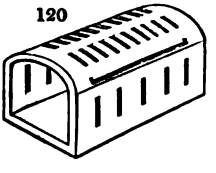

Fig. 120 represents the muffle or pot, which is 12 inches long, 6 inches broad inside; in the clear 6¾: in height 4¼ inside measure, and nearly 5¼ in the clear.

Fig. 121, the muffle-plate, which is of the same size as the bottom of the muffle.

Fig. 122 is a representation of the sliding-door of the mouth-plate, as shown at *d*, in *fig.* 117.

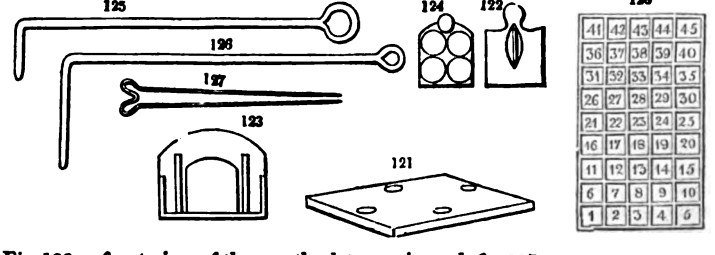

Fig. 123, a front view of the mouth-plate or piece, *d*, *fig.* 117.

Fig. 124, a representation of the mode of the making, or shutting up with pieces of charcoal, the mouth of the furnace.

Digitized by Google

Fig 125, the teaser for cleaning the grate.

Fig. 126, a larger teaser, which is introduced at the top of the furnace, for keeping a complete supply of charcoal around the muffle.

Fig. 127, the tongs used for charging the assays into the cups.

Fig. 128 represents a board of wood used as a register, and is divided into 45 equal compartments, upon which the assays are placed previously to their being introduced into the furnace. When the operation is performed, the cupels are placed in the furnace in situations corresponding to these assays on the board. By this means all confusion is avoided, and without this regularity it would be impossible to preserve the accuracy which the delicate operations of the assayer require.

We now proceed to a description of a small assay furnace invented by Messrs. Anfrye and D'Arcet, of Paris. They term it, *le petit Fourneau à Coupelle. Fig.* 129 represents this furnace, and it is composed of a chimney or pipe or wrought iron, *a*, and of the furnace, B. It is 17½ inches high, and 7½ inches wide. The furnace is formed of three pieces; of a dome, A; the body of the furnace, B; and the ash pit, C, which is used as the base of the furnace, *figs.* 129 and 130. The principal piece, or body of the furnace, B, has the form of a hollow tower, or of a hollow cylinder, flattened equally at the two opposite sides parallel to the axis, in such a manner that the horizontal section is elliptical. The foot which supports it is a hollow truncated cone, flattened in like manner upon the two opposite sides, and having consequently for its basis two ellipses of different diameters: the smallest ought to be equal to that of the furnace, so that the bottom of the latter may exactly fit it. The dome, which forms an arch above the furnace, has also its base elliptical, whilst that of the superior orifice, by which the smoke goes out, preserves the cylindrical form. The tube of wrought iron is 18 inches long, and 2½ inches in diameter, having one of its ends a little enlarged, and slightly conical, that it may be exactly fitted or jointed upon the upper part of the furnace dome, *d* (*fig.* 129). At the union of the conical and cylindrical parts the tube, there is placed a small gallery of iron, *e*, *figs.* 129, 130. (See also a plan of it, *fig.* 131.) This gallery is both ingenious and useful. Upon it are placed the cupels, which are thus annealed during the ordinary work of the furnace, that they may be introduced into the muffle when it is brought into its proper degree of heat. A little above this gallery is a door, *f*, by which, if thought proper, the charcoal could be introduced into the furnace; above that there is placed at *g* a throttle valve, which is used for regulating the draught of the furnace at pleasure. Messrs. Anfrye and D'Arcet say, that, to give the furnace the necessary degree of heat so as to work the assays of gold, the tube must be about 18 inches above the gallery for annealing or heating the cupels. The circular opening in the dome, *h* (*fig.* 129, and as seen in section *fig.* 130), is used to introduce the charcoal into the furnace: it is also used to inspect the interior of the furnace, and to arrange the charcoal round the muffle. This opening is kept shut during the working of the furnace, with the mouth-piece, of which the face is seen at *n*, *fig.* 130.

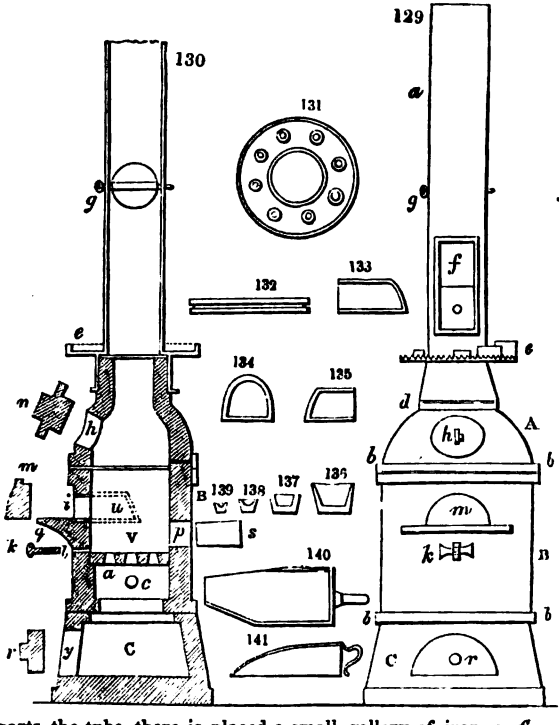

Digitized by Google

The section of the furnace, *fig.* 130, presents several openings, the principal of which is that of the muffle; it is placed at *i*; it is shut with the semicircular door *m*, *fig.* 129, and seen in the section *m*, *fig.* 130. In front of this opening, is the table or shelf upon which the door of the muffle is made to advance or recede. The letter *q*, *fig.* 130, shows the face, side, and cross section of the shelf, which makes part of the furnace. Immediately under the shelf is a horizontal slit, *l*, which is pierced at the level of the upper part of the grate, and used for the introduction of a slender rod of iron, that the grate may be easily kept clean. This opening is shut at pleasure, by the wedge represented at *k*, *figs.* 129 and 130.

Upon the back of the furnace is a horizontal slit, *p*, *fig.* 130, which supports the fire brick, *s*, and upon which the end of the muffle, if necessary, may rest; *u*, *fig.* 130, is the opening in the furnace where the muffle is placed.

The plan of the grate of the furnace is an ellipse: *fig.* 132 is a horizontal view of it. The dimensions of that ellipsis determine the general form of the furnace, and thickness of the grate. To give strength and solidity to the grate, it is encircled by a bar or hoop of iron. There is a groove in which the hoop of iron is fixed. The holes of the grate are truncated cones, having the greater base below, that the ashes may more easily fall into the ash-pit. The letter *v*, *fig.* 130, shows the form of these holes. The grate is supported by a small bank or shelf, making part of the furnace, as seen at *a*, *fig.* 130.

The ash-pit, c, has an opening, *y*, in front, *fig.* 130; and is shut when necessary by the mouth-piece, *r*, *figs.* 129 and 130.

To give strength and solidity to the furnace, it is bound with hoops of iron, at *b b b b*, *fig.* 129.

Figs. 133, 134, 135, are views of the muffle.

Fig. 136 is a view of a crucible for annealing gold.

Figs. 137, 138, 139, are cupels of various sizes, to be used in the furnace. They are the same as those used by assayers in their ordinary furnaces.

Figs. 140 and 141 are views of the hand-shovels, used for filling the furnace with charcoal; they should be made of such size and form as to fit the opening *h*, in *figs.* 129 and 130.

The smaller pincers or tongs, by which the assays are charged into the cupels, and by which the latter are withdrawn from the furnace, as well as the teaser for cleansing the grate of the furnace, are similar to those used at the British Mint.

In the furnace of the Mint above described, the number of assays that can be made at one time is 45. The same number of cupels is put into the muffle. The furnace is then filled with charcoal to the top, and upon this are laid a few pieces already ignited. In the course of three hours, a little more or less according to circumstances, the whole is ignited; during which period the muffle, which is made of fire-clay, is gradually heated to redness, and is prevented from cracking, which a less regular or more sudden increase of temperature would not fail doing: the cupels, also, become properly annealed. All moisture being dispelled, they are in a fit state to receive the piece of silver or gold to be assayed.

The greater care that is exercised in this operation, the less liable is the assayer to accidents from the breaking of the muffle; which it is both expensive and troublesome to fit properly into the furnace.

The cupels used in the assay process are made of the ashes of burnt bones (phosphate of lime). In the Royal Mint, the cores of ox-horn are selected for this purpose; and the ashes produced are about four times the expense of the bone-ash used in the process of cupellation on a large scale. So much depends upon the accuracy of an assay of gold or silver, where a mass of 15 lbs. troy in the first, and 60 lbs. troy in the second instance, is determined by the analysis of a portion not exceeding 20 troy grains, that every precaution which the longest experience has suggested is used to obtain an accurate result. Hence the attention paid to the selection of the most proper materials for making the cupels.

The cupels are formed in a circular mould made of cast steel, very nicely turned, by which means they are easily freed from the mould when struck. The bone-ash is used moistened with a quantity of water, sufficient to make the particles adhere firmly together. The circular mould is filled, and pressed level with its surface; after which, a pestle or rammer, having its end nicely turned, of a globular or convex shape, and of a size equal to the degree of concavity wished to be made in the cupel for the reception of the assay, is placed upon the ashes in the mould, and struck with a hammer until the cupel is properly formed. These cupels are allowed to dry in the air for some time before they are used. If the weather is fine, a fortnight will be sufficient.

An assay may prove defective for several reasons. Sometimes the button or bead

Digitized by Google

sends forth crystalline vegetations on its surface with such force as to make one suppose a portion of the silver may be thrown out of the cupel, technically called "*spitting.*" When the surface of the bead is dull and flat, the assay is considered to have been too hot, and it indicates a loss of silver in fumes. When the tint of the bead is not uniform, when its inferior surface is bubbly, when yellow scales of oxide of lead remain on the bottom of the cupel, and the bead adheres strongly to it,—by these signs it is judged that the assay has been too cold, and that the silver retains some lead.

Lastly, the assay is thought to be good if the bead is of a round form, if its upper surface is brilliant, if its lower surface is granular and of a dead white, and if it separates readily from the cupel.

After the lead is put into the cupel, it gets immediately covered with a coat of oxide, which resists the admission of the silver to be assayed into the melted metal; so that the alloy cannot form. When a bit of silver is laid on a lead bath in this predicamant, we see it swim about for a long time without dissolving. In order to avoid this result, the silver is wrapped up in a bit of paper; and the carburetted hydrogen generated by its combustion reduces the film of the lead oxide, gives the bath immediately a bright metallic lustre, and enables the two metals readily to combine.

As the heat rises, the oxide of lead flows round about over the surface, till it is absorbed by the cupel. When the lead is wasted to a certain degree, a very thin film of it only remains on the silver, which causes the iridescent appearance like the colours of soap-bubbles—a phenomenon called, by the old chemists, fulguration.

When the cupel cools in the progress of the assay, the oxygenation of the lead ceases; and, instead of a very liquid vitreous oxide, an imperfectly melted oxide is formed, which the cupel cannot absorb. To correct a cold assay, the temperature of the furnace ought to be raised, and pieces of paper put into the cupel, till the oxide of lead which adheres to it be reduced. On keeping up the heat, the assay will resume its ordinary train.

Pure silver almost always vegetates. Some traces of copper destroy this property, which is obviously due to the oxygen which the silver can absorb while it is in fusion, and which is disengaged the moment it solidifies. An excess of lead, by removing all the copper at an early stage, tends to cause the vegetation.

The brightening is caused by the heat evolved when the button passes from the liquid to the solid state. Many other substances present the same phenomenon.

In the above operation it is necessary to employ lead which is very pure, or at least free from silver. This is called *poor lead.* I have found the lead reduced from Pattison's "oxychloride" to be more free from silver than any that I could obtain by any other means; the lead reduced from the litharge of commerce usually contains from 10 to 15 dwts. of silver per ton.

It has been observed at all times, that the oxide of lead carries off with it, into the cupel, a little silver in the state of an oxide. This effect becomes less, or even disappears, when there is some copper remaining; and the more copper, the less chance there is of any silver being lost. The loss of silver increases, on the other hand, with the dose of lead. Hence the reason why it is so important to proportion the lead with a precision which, at first sight, would appear to be superfluous. Hence, also, the reason of the attempts which have, of late years, been made to change the whole system of silver assays, and to have recourse to a method exempt from the above causes of error.

M. D'Arcet, charged by the Commission of the Mint in Paris to examine into the justice of the reclamations made by the French silversmiths against the public assays, ascertained that they were well founded; and that the results of cupellation gave for the alloys between 897 and 903 thousandths (the limits of their standard coin) an inferior standard, by from 4 to 5 thousandth parts, from the standard or title which should result from the absolute or actual alloy.

The mode of assay shows, in fact, that an ingot experimentally composed of 900 thousandths of fine silver and 100 thousandths of copper, appears, by cupellation, to be only, at the utmost, 896 or 897 thousandths; whereas fine silver of 1000 thousandths comes out nearly of its real standard. Consequently, a director of the Mint who should compound his alloy with fine silver would be obliged to employ 903 or 904 thousandths, in order that, by the assay in the laboratory of the Mint, it should appear to have the standard of 900 thousandths. These 3 or 4 thousandths would be lost to him, since they would be disguised by the mode of assay, the definitive criterion of the quantity of silver, of which the Government keeps count from the coiner of the money.

From experiments subsequently made by M. D'Arcet, it appears that silver assays

Digitized by Google

always suffer a loss of the precious metal, which varies with the standard of the alloy. It is 1 thousandth for fine silver,

4·3 thousandths for silver of 900 thousandths,
4·9 „ „ 800 „
4·2 „ „ 500 „

and diminishes thereafter, progressively, till the alloy contains only 100 thousandths of silver, at which point the loss is only 0·4.

Assays requested by the Commission of the Paris Mint, from the assayers of the principal Royal Mints in Europe, to which the same alloys, synthetically compounded, were sent, afforded the results inscribed in the following Table: —

Names of the Assayers.	Cities where they reside.	Standards found for the Mathematical Alloys.		
		950 Mill.	900 Mill.	800 Mill.
F. de Castenhole, Mint Assayer	Vienna	946·20	898·40	795·10
A. R. Vervaëz, ditto	Madrid	944·40	893·70	789·20
D. M. Cabrera, Assayer in Spain	Ditto	944·40	893·70	788·60
Assayer	Amsterdam	947·00	895·00	795·00
Mr. Bingley, Assay Master	London	946·25	896·25	794·25
Mr. Johnson, Assayer	Ditto	933·33	883·50	783·33
Inspector of the Mint	Utrecht	945·00	896·50	799·00
Assayer of the Mint	Naples	945·00	891·00	787·00
Assayer of Trade	Ditto	945·00	891·00	787·00
Assayer of the Mint	Hamburg	946·$\frac{13}{12}$	897·$\frac{11}{12}$	798·$\frac{11}{12}$
Ditto	Altona	942·$\frac{1}{4}$	894·00	790

These results, as well as those in still greater numbers, obtained from the ablest Parisian assayers, upon identical alloys of silver and copper, prove that the mode of assay applied to them brings out the standard too low; and further, that the quantity of silver masked or disguised, is not uniform for these different eminent assay masters. An alloy, for example, at the standard of 900 thousandths is judged

at the Mint of Paris to have a standard of 895·6 mill.
„ Vienna „ 898·4 „
„ Madrid „ 893·7 „
„ Naples „ 891·0 „

The fact thus so clearly made out, of a loss in the standard of silver bullion and coin, merits the most serious attention; and it will appear astonishing, perhaps, that a thing recurring every day should have remained for so long a time in the dark. In reality, however, the fact is not new; as the very numerous and well-made experiments of Tillet from 1760 to 1763, which are related in the memoirs of the Academy of Sciences, show, in the silver assays, a loss still greater than that which was experienced in the laboratory of the Commission of the French Mint. But he thought that, as the error was common to the nations in general, it was not worth while or prudent to introduce any innovation.

A mode of assaying to give with certainty the standard of silver bullion, should be entirely independent of the variable circumstances of temperature, and the unknown proportions of copper, so difficult to regulate by the mere judgment of the senses. The process by the humid way, recommended to the Royal Mint in 1829, and exhibited as to its principles before the Right Honourable John Herries, then Master, in 1830, has all the precision and certainty we could wish. It is founded on the well-known property which silver has, when dissolved in nitric acid, to be precipitated in a chloride of silver quite insoluble by a solution of sea salt or by muriatic acid; but, instead of determining the weight of the chloride of silver, which would be somewhat uncertain and rather tedious on account of the difficulty of drying it, we take the quantity of the solution of sea salt which has been necessary for the precipitation of the silver. To put the process in execution, a liquor is prepared composed of water and sea salt in such proportions that 1000 measures of this liquor may precipitate completely 12 grains of silver, perfectly pure or of the standard 1000, previously dissolved in nitric acid. The liquor thus prepared gives, immediately, the true standard of any alloy whatever, of silver and copper, by the quantity of which it may be neccssary to precipitate 12 grains of this alloy. If, for example, 905 measures

Digitized by Google

have been required to precipitate the 12 grains of alloy, its standard would be 905 thousandths.

The process by the humid way is, so to speak, independent of the operator, the manipulations are so easy; and the term of the operation is very distinctly announced by the absence of any sensible nebulosities on the affusion of sea salt into the silver solution, while there remains in it one quarter of a thousandth of metal. The process is not tedious, and in experienced hands it may rival the cupel in rapidity: it has the advantage over the cupel as being more within the reach of ordinary operators, and of not requiring a long apprenticeship. It is particularly useful to such assayers as have only a few assays to make daily, as it will cost them very little time and expense.

By agitating briskly, during two minutes, the liquid rendered milky by the precipitation of the chloride of silver, it may be sufficiently clarified to enable us to appreciate, after a few moments of repose, the disturbance that can be produced in it by the addition of 1000th of a grain of silver. Filtration is more efficacious than agitation, especially when it is employed afterwards: it may be sometimes used; but agitation, which is much more prompt, is generally sufficient. The presence of lead and copper, or any other metal, except mercury, has no perceptible influence on the quantity of sea salt necessary to precipitate the silver; that is to say, the same quantitity of silver, pure or alloyed, requires for its precipitation a constant quantity of the solution of sea salt.

Supposing that we operate upon a gramme of pure silver, the solution of sea salt ought to be such that 100 centimetres cube may precipitate exactly the whole of the silver. The standard of an alloy is given by the number of thousandths of solution of sea salt necessary to precipitate the silver contained in a gramme of alloy.

When any mercury is accidentally present, which is, however, a rare occurrence, it is made obvious by the precipitated chloride remaining white when exposed to daylight; whereas, when there is no mercury present, it becomes speedily first grey and then purple. Silver so contaminated must be strongly ignited in fusion before being assayed, and its loss of weight noted. In this case, a cupel assay must be had recourse to.

Preparation of the Normal Solution of Sea Salt, when it is measured by Weight.—Supposing the sea salt pure as well as the water, we have only to take these two bodies in the proportion of 0·5427 k. of salt to 99·4573 k. of water, to have 100 k. of solution, of which 100 grammes will precipitate exactly one gramme of silver. But instead of pure salt, which is to be procured with difficulty, and which besides may be altered readily by absorbing the humidity of the air, a concentrated solution of the sea salt of commerce is to be preferred, of which a large quantity may be prepared at a time, to be kept in reserve for use, as it is wanted.—*Instruction de Gay-Lussac.*

Preparation of the Normal Solution of Sea Salt, when measured by Volume.—The measure by weight has the advantage of being independent of temperature, of having the same degree of precision as the balance, and of not standing in need of correction. The measure by volume has not all these advantages; but, by giving it sufficient precision, it is more rapid, and is quite sufficient for the numerous daily assays of the Mint. This normal solution is so made, that a volume equal to that of 100 grammes of water, or 100 centimetres cube, at a determinate temperature, may precipitate exactly one gramme of silver. The solution may be kept at a constant temperature, and in this case the assay stands in no want of correction; or if its temperature be variable, the assay must be corrected according to its influence. These two circumstances make no change in the principle of the process, but they are sufficiently important to occasion some modifications in the apparatus. Experience has decided the preference in favour of applying a correction to a variable temperature.

We readily obtain a volume of 100 cubic centimetres by means of a *pipette, fig.* 142, so gauged, that when filled with water up to the mark *a, b,* and well dried at its point, it will run out, at a continuous efflux, 100 grammes of water at the temperature of 15°C. (59° F.) We say purposely at one efflux, because after the cessation of the jet, the pipette may still furnish two or three drops of liquid, which must not be counted or reckoned upon. The weight of the volume of the normal solution, taken in this manner with suitable precautions, will be uniform from one extreme to another, upon two centimetres and a half, at most, or to a quarter of a thousandth, and the difference from the mean will be obviously twice less, or one half. Let us indicate the most simple manner of taking a measure of the normal solution of sea salt.

After having immersed the beak, *c,* of the pipette in the solution, we apply suction, by the mouth, to the upper orifice, and thereby raise the liquid to *d,* above the circular line *a b.* We next apply neatly the forefinger of one hand to this orifice, remove the pipette from the liquid, and seize it as represented in *fig.* 143. The mark *a b* being placed at the level of the eye, we make the surface of the solution become exactly a

Digitized by Google

tangent to the plane *a b*. At the instant it becomes a tangent, we leave the beak, *c*, of *pipette* open, by taking away the finger that had been applied to it, and without changing anything else in the position of the hands, we empty it into the bottle which should receive the solution, taking care to remove it whenever the efflux has run out.

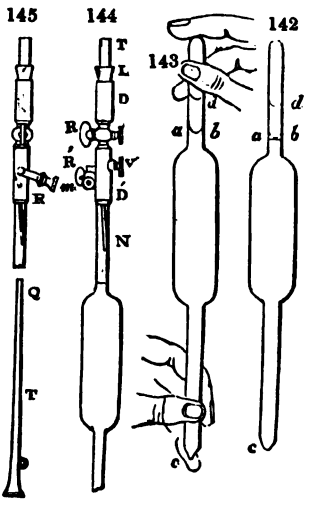

If, after filling the pipette by suction, anyone should find a difficulty in applying the forefinger fast enough to the upper orifice, without letting the liquid run down below the mark *a b*, he should remove the *pipette* from the solution with its top still closed with his tongue, then apply the middle finger of one of his hands to the lower orifice; after which he may withdraw his tongue, and apply the forefinger of the other hand to the orifice previously wiped. This method of obtaining a measure of normal solution of sea salt is very simple, and requires no complex apparatus; but we shall indicate another manipulation still easier, and much more exact.

In this new process the *pipette* is filled from the top like a bottle, instead of being filled by suction, and it is moreover fixed. *Fig.* 144 represents the apparatus. D and D′ are two sockets separated by a stopcock, R. The upper one, tapped interiorly, receives, by means of a cork stopper, L, the tube, T, which admits the solution of sea salt. The lower socket is cemented on to the *pipette*; it bears a small air-cock, R′, and a screw plug, V, which regulates a minute opening intended to let the air enter very slowly into the *pipette*. Below the stopcock, R′, a silver tube, N, of narrow diameter, soldered to the socket, leads the solution into the *pipette*, by allowing the air, which it displaces, to escape by the stopcock, R′. The screw plug, with the milled head, V, replaces the ordinary screw by which the key of the stopcock may be made to press, with more or less force, upon its conical seat.

Fig. 145 represents a side view of the apparatus just described. We here remark an air-cock R, and an opening *m*. At the extremity Q of the same figure, the conical pipe T enters with friction. It is by this pipe that the air is sucked into the *pipette*, when it is to be filled from its beak.

The *pipette* is supported by two horizontal arms H K (*fig.* 146) movable about a common axis, A A, and capable of being drawn out or shortened by the aid of two longitudinal slits. They are fixed steadily by two screw nuts, *e é*, and their distance may be varied by means of round bits of wood or cork interposed, or even by opposite screw nuts, *o ó*. The upper arm H is pierced with a hole, in which is fixed, by the pressure of a wooden screw *v*, the socket of the *pipette*. The corresponding hole of the lower arm is larger; and the beak of the *pipette* is supported in it by a cork stopper, L. The apparatus is fixed by its tail-piece P, by means of a screw to the corner of a wall, or any other prop.

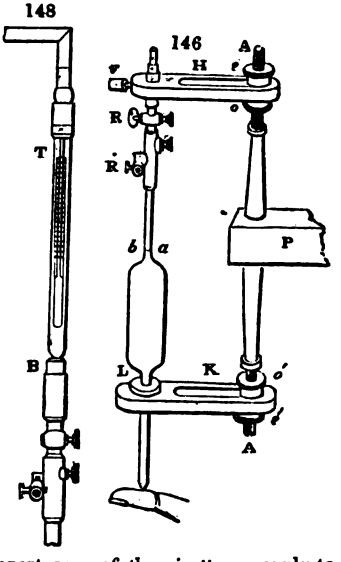

The manner of filling the *pipette* is very simple. We begin by applying the fore finger of the left hand to the lower aperture, *c*; we then open the two stopcocks R and R′. Whenever the liquor approaches the neck of the *pipette*, we must temper its influx, and when it has arrived at some millimetres above the mark *a b*, we close the two stopcocks, and remove our forefinger. We have now nothing more to do than to regulate the *pipette*; for which purpose the liquid must touch the line *a b*, and must simply adhere externally to the beak of the *pipette*.

This last circumstance is easily adjusted. After taking away the finger which closed the aperture *c* of the *pipette*, we apply to

Digitized by Google

this orifice a moist sponge *m*, *fig.* 147 to absorb the superfluous liquor as it drops out. This sponge is called the handkerchief (*mouchoir*), by M. Gay-Lussac. The *pipette* is said to be wiped when there is no liquor adhering to its point exteriorly.

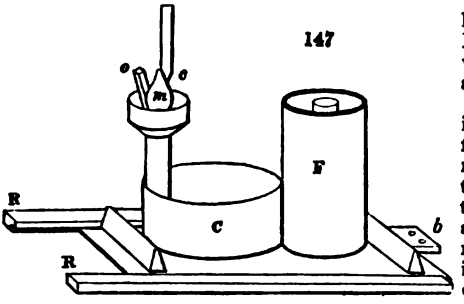

For the convenience of operating, the handkerchief is fixed by friction in a tube of tin plate, terminated by a cup, open at bottom to let the droppings flow off into the cistern C, to which the tube is soldered. It may be easily removed for the purpose of washing it; and, if necessary, a little wedge of wood, *o*, can raise it towards the *pipette*.

To complete the adjustment of the *pipette*, the liquid must be made merely to descend to the mark *a*, *b*. With this view, and whilst the handkerchief is applied to the beak of the *pipette*, the air must be allowed to enter very slowly, by unscrewing the plug *v*, *fig.* 144; and at the moment of the contact the handkerchief must be removed, and the bottle F, destined to receive the solution, must be placed below the orifice of the *pipette*, *fig.* 147. As the motion must be made rapidly, and without hesitation, the bottle is placed in a cylinder of tin-plate, of a diameter of somewhat greater, and forming one body with the cistern and the handkerchief. The whole of this apparatus has for a basis a plate of tinned iron, movable between the wooden rulers R R, one of which bears a groove, under which the edge of the plate slips. Its traverses are fixed by two abutments, *b b*, placed so that when it is stopped by one of them, the beak of the *pipette*, corresponds to the centre of the neck of the bottle, or is a tangent to the handkerchief. This arrangement, very convenient for wiping the *pipette* and emptying it, gives the apparatus sufficient solidity, and allows of its being taken away, and replaced without deranging anything. It is obvious that it is of advantage, when once the entry of the air into the *pipette* has been regulated by the screw v, to leave it constantly open because the motion from the handkerchief to the bottle is performed with sufficient rapidity to prevent a drop of the solution from collecting and falling down.

Temperature of the Solution.—After having described the manner of measuring by volume the normal solution of the sea salt, we shall indicate the most convenient means of taking the temperature. The thermometer is placed in a tube of glass, T, *fig.* 148, which the solution traverses to arrive at the *pipette*. It is suspended in it by a piece of cork, grooved on the four sides to afford passage to the liquid. The scale is engraved upon the tube itself, and is repeated at the opposite side, to fix the eye by the coincidence of this double division at the level of the thermometric column. The tube is joined below to another narrower one, through which it is attached by means of a cork stopper B, in the socket of the stopcock of the *pipette*. At its upper part it is cemented into a brass socket, screw-tapped in the inside, which is connected in its turn by a cock, with the extremity, also tapped, of the tube above T, belonging to the reservoir of the normal solution. The corks employed here as connecting links between the parts of the apparatus, give them a certain flexibility, and allow of their being dismounted and remounted in a very short time; but it is indispensable to make them be traversed by a hollow tube of glass or metal, which will hinder them from being crushed by the pressure they are exposed to. If the precaution be taken to grease them with a little suet and to fill their pores, they will suffer no leakage.

Preservation of the Normal Solution of Sea Salt in metallic Vessels.—M. Gay-Lussac uses for this purpose a cylindrical vessel or drum of copper, of a capacity of about 110 litres, having its inside covered with a resin and wax cement.

Preparation of the Normal Solution of Sea Salt, measuring it by Volume. — If the drum contains 110 litres, we should only put 105 into it, in order that sufficient space may be left for agitating the liquor without throwing it out. According to the principle that 100 centimetres cube, or $\frac{1}{10}$th of a litre of the solution should contain enough of sea salt to precipitate a gramme of pure silver; and, admitting moreover, 13·516 for the equivalent of silver, and 7·335 for that of sea salt, we shall find the quantity of pure salt that should be dissolved in the 105 litres of water, and which corresponds to 105 × 10 = 1050 grammes of silver, to be by the following proportion:—

$$13{\cdot}516 : 7{\cdot}335 :: 1050 \text{ gramm.} : x = 569{\cdot}83 \text{ gr.}$$

And as the solution of the sea salt of commerce formerly mentioned contains approximatively 250 grammes per kilogramme, we must make 2279·3 grammes of this

Digitized by Google

solution to have 569·83 gram. of salt. The mixture being perfectly made, the tubes and the *pipette* must be several times washed by running the solution through them, and putting it into the drum. The standard of the solution must be determined after it has been well agitated, supposing the temperature to remain uniform.

To arrive more conveniently at this result, we begin by preparing two *decimes* solutions; one of silver, and another of sea salt.

The decime solution of silver is obtained by dissolving 1 gramme of silver in nitric acid, and diluting the solution with water till its volume becomes a litre.

The decime solution of sea salt may be obtained by dissolving 0·543 grammes of pure sea salt in water, so that the solution shall occupy a litre; but we shall prepare it even with the normal solution which we wish to test, by mixing a measure of it with 9 measures of water; it being understood that this solution is not rigorously equivalent to that of silver, and that it will become so only when the normal solution employed for its preparation shall be finally of the true standard. Lastly, we prepare beforehand several stoppered phials, in each of which we dissolve 1 gramme of silver in 8 or 10 grammes of nitric acid. For brevity's sake, we shall call these "tests."

Now to investigate the standard of the normal solution, we must transfer a *pipette* of it into one of these test phials; and we must agitate the liquors briskly to clarify them. After some instants of repose, we pour in 2 thousandths of the *decime* solution of sea salt, which we suppose will produce a precipitate. The normal liquor is consequently too feeble; and we should expect this, since the salt employed was not perfectly pure. We agitate and add 2 fresh thousandths, which will also produce a precipitate. We continue thus, by successive additions of 2 thousandths, till the last produces no precipitation. Suppose that we have added 16 thousandths: the last two should not be reckoned, as they produced no precipitate; the preceding two were necessary, but only in part; that is to say, the useful thousandths added are above 12 and below 14, or otherwise they are on an average equal to 13.

Thus, in the condition of the normal solution, we require 1013 parts of it to precipitate one gramme of silver, while we should require only 1000. We shall find the quantity of concentrated solution of sea salt that we should add, by noting that the quantity of solution of sea salt, at first employed, viz. 2279·3 grammes, produced a standard of only 987 thousandths = 1000 — 13; and by using the following proportion:

$$987 : 2279{\cdot}3 :: 13 : x = 30{\cdot}02 \text{ grammes.}$$

This quantity of the strong solution of salt, mixed with the normal solution in the drum, will correct its standard, and we shall see now by how much.

After having washed the tubes and the *pipette* with the new solution, we must repeat the experiment upon a fresh gramme of silver. We shall find, for example, in proceeding only by a thousandth at a time, that the first causes a precipitate, but not the second. The standard of the solution is still too weak, and is comprised between 1000 and 1001; that is to say, it may be equal to $1000\frac{1}{2}$, but we must make a closer approximation.

We pour into the test bottle 2 thousandths of the *decime* solution of silver, which will destroy 2 thousandths of sea salt, and the operation will have retrograded by 2 thousandths; that is to say, it will be brought back to the point at which it was first of all. If, after having cleared up the liquor, we add half a thousandth of the decime solution, there will necessarily be a precipitate, as we knew beforehand, but a second will cause no turbidity. The standard of the normal liquor will be consequently comprehended between 1000 and $1000\frac{1}{2}$, or equal to $1000\frac{1}{4}$.

We should rest content with this standard, but if we wish to correct it, we may remark that the two quantities of solution of salt added, viz. 2279·3 gr. + 30·02 gr. = 2309·32 gr., have produced only 999·75 thousandths, and that we must add a new quantity of it corresponding to $\frac{1}{4}$ of a thousandth. We make, therefore, the proportion

$$999{\cdot}75 : 2309{\cdot}32 :: 0{\cdot}25 : x.$$

But since the first term differs very little from 1000, we may content ourselves to have x by taking the $\frac{0{\cdot}25}{1000}$ of 2309·32, and we shall find 0·577 gr. for the quantity of solution of sea salt to be added to the normal solution.

It is not convenient to take exactly so small a quantity of solution of sea salt by the balance, but we shall succeed easily by the following process. We weigh 50 grammes of this solution, and we dilute it with water, so that it occupies exactly half a litre, or 500 centimetres cube. A *pipette* of this solution, one centimetre cube in volume, will give a decigramme of the primitive solution, and as such a small *pipette* is divided into twenty drops, each drop, for example, will present 5 milligrammes of

Digitized by Google

the solution. We should arrive at quantities smaller still by diluting the solution with a proper quantity of water; but greater precision would be entirely needless.

The testing of the normal liquor just described is, in reality, less tedious than might be supposed. It deserves also to be remarked, that liquor has been prepared for more than 1000 assays; and that, in preparing a fresh quantity, we shall obtain directly its true standard, or nearly so, if we bear in mind the quantities of water and solution of salt which have been employed.

Correction of the Standard of the Normal Solution of Sea Salt, when the Temperature changes. — We have supposed, in determining the standard of the normal solution of sea salt, that the temperature remained uniform. The assays made in such circumstances have no need of correction; but if the temperature should change, the same measure of the solution will not contain the same quantity of sea salt. Supposing that we have tested the solution of the salt at the temperature of 15° C.; if, at the time of making the experiment, the temperature is 18° C., for example, the solution will be too weak on account of its expansion, and the *pipette* will contain less of it by weight; if, on the contrary, the temperature has fallen to 12°, the solution will be thereby concentrated, and will prove too strong. It is therefore proper to determine the correction necessary to be made for any variation of temperature.

To ascertain this point, the temperature of the solution of sea salt was made successively, to be 0, 5°, 10°, 15°, 20°, 25°, and 30° C.; and three *pipettes* of the solution were weighed exactly at each of these temperatures. The third of these weighings gave the mean weight of a *pipette*. The corresponding weights of a *pipette* of the solution were afterwards graphically interpolated from degree to degree. These weights form the second column of the following Table. They enable us to correct any temperature between 0° and 30° C. (32° and 86° F.) when the solution of sea salt has been prepared in the same limits.

Table of Correction for the Variations in the Temperature of the Normal Solution of the Sea Salt.

Temperature.	Weight.	5°	10°	15°	20°	25°	30°
Degrees.	Gram.	Mill.	Mill.	Mill.	Mill.	Mill.	Mill.
4	100,109	0·0	−0 1	+0·1	+0·7	+1·7	+2·7
5	100,113	0·0	−0·1	+0·1	+0·7	+1·7	+2·8
6	100,115	0·0	0·0	+0·2	+0·8	+1·7	+2·8
7	100,118	+0·1	0·0	+0·2	+0·8	+1·7	+2·8
8	100,120	+0·1	0·0	+0·2	+0·8	+1·8	+2·8
9	100,120	+0·1	0·0	+0·2	+0·8	+1·8	+2·8
10	100,118	+0·1	0·0	+0·2	+0 8	+1·7	+2·8
11	100,116	0·0	0·0	+0·2	+0·8	+1·7	+2·8
12	100,114	0·0	0·0	+0·2	+0·8	+1·7	+2·8
13	100,110	0·0	−0·1	+0·1	+0·7	+1·7	+2·7
14	100,106	−0·1	−0·1	+0·1	+0·7	+1·6	+2·7
15	100,099	−0·1	−0·2	−0·0	+0·6	+1·6	+2·6
16	100 090	−0·2	−0·3	−0·1	+0·5	+1·5	+2·5
17	100,078	−0·4	−0·4	−0·2	+0·4	+1·3	+2·4
18	100,065	−0·5	−0·5	−0·3	+0·3	+1·2	+2·3
19	100,053	−0·6	−0·7	−0·5	+0·1	+1·1	+2·2
20	100,039	−0·7	−0 8	−0·6	0·0	+1·0	+2·0
21	100,021	−0·9	−1·0	−0·8	−0·2	+0·8	+1·9
22	100,001	−1·1	−1·2	−1·0	−0·4	+0·6	+1·7
23	99,983	−1·3	−1·4	−1·2	−0·6	+0·4	+1·5
24	99,964	−1·5	−1·5	−1·4	−0·8	+0·2	+1·3
25	99,944	−1·7	−1·7	−1·6	−1·0	0·0	+1·1
26	99,924	−1·9	−1·9	−1·8	−1·2	−0·2	+0·9
27	99,902	−2·1	−2·2	−2·0	−1·4	−0·4	+0·7
28	99,879	−2·3	−2·4	−2·2	−1·6	−0·7	+0·4
29	99,858	−2·6	−2·6	−2·4	−1·8	−0·9	+0·2
30	99,836	−2·8	−2·8	−2·6	−2·0	−1·1	0·0

Let us suppose, for example, that the solution has been made standard at 15°, and that at the time of using it, the temperature has become 18°. We see by the second column of the Table, that the weight of a measure of the solution is 100·099 gr. at 15°, and 100·065 at 18°; the difference, 0·034 gr., is the quantity of solution less which

Digitized by Google

has been really taken; and of course we must add it to the normal measure, in order to make it equal to one thousand *millièmes*. If the temperature of the solution had fallen to 10° the difference of the weight of a measure from 10° to 15° would be 0·019 gr., which we must on the contrary deduct from the measure, since it had been taken too large. These differences of weight of a measure of solution at 15°, from that of a measure at any other temperature, form the column 15° of the table, where they are expressed in thousandths; they are inscribed on the same horizontal lines as the temperatures to which each of them relates with the sign + *plus*, when they must be added, and with the sign — *minus*, when they must be subtracted. The columns 5°, 10°, 20°, 25°, 35°, have been calculated in the same manner for the cases in which the normal solution may have been graduated to each of these temperatures. Thus, to calculate the column 10°, the number 100·118 has been taken in the column of weights for a term of departure, and its difference from all the numbers of the same column has been sought.

Several expedients have been employed to facilitate and abridge the manipulations. In the first place, the phials for testing or assaying the specimens of silver should all be of the same height and of the same diameter. They should be numbered at their top, as well as on their stoppers, in the order 1, 2, 3, &c. They may be ranged successively in tens; the stoppers of the same series being placed on a support in their proper order. Each two phials should, in their turn, be placed in a japanned tin case (*fig.* 149) with ten compartments, duly numbered. These compartments are cut out anteriorly to about half their height, to allow the bottoms of the bottles to be seen. When each phial has received its portion of alloy, through a wide-beaked funnel, there must be poured into it about 10 grammes of nitric acid, of specific gravity 1·28, with a *pipette*, containing that quantity; it is then exposed to the heat of a water bath, in order to facilitate the solution of the alloy. The water bath is an oblong vessel made of tin plate, intended to receive the phials. It has a movable double bottom, pierced with small holes, for the purpose of preventing the phials being broken, as it insulates them from the bottom, to which the heat is applied. The solution is rapid; and, since it emits nitrous vapours in abundance, it ought to be carried on under a chimney.

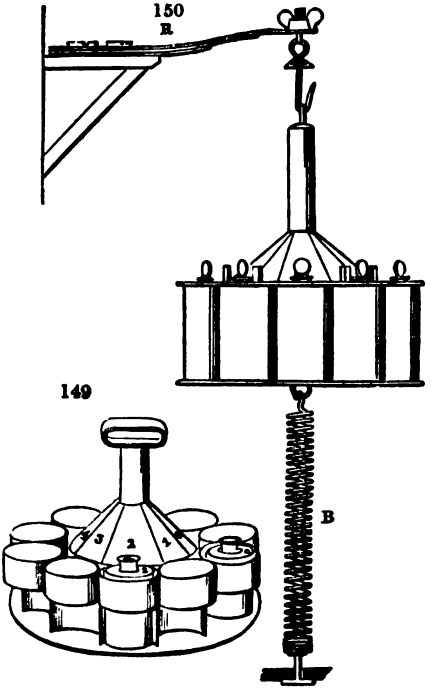

The Agitator.—*Fig.* 150 gives a sufficiently exact idea of it, and may dispense with a lengthened description. It has ten cylindrical compartments, numbered from 1 to 10. The phials, after the solution of the alloy, are arranged in it in the order of their numbers. The agitator is then placed within reach of the *pipette* intended to measure out the normal solution of sea salt, and a *pipette* full of this solution is put into each phial. Each is then closed with its glass stopper, previously dipped in pure water. They are fixed in the cells of the agitator by springs. The agitator is then suspended to a spring R, and, seizing it with both hands, the operator gives an alternating rapid movement, which agitates the solution, and makes it, in less than a minute, as limpid as water. This movement is sometimes promoted by a spiral spring, B, fixed to the agitator and the ground; but this is seldom made use of, because it is convenient to be able to transport the agitator from one place to another. When the agitation is finished, the catches are released, and the phials are placed in order upon a table furnished with round cells destined to receive them, and to screen them.

When we place the phials upon this table, we must give them a brisk circular motion to collect the chloride of silver scattered round their sides; we must lift out their

Digitized by Google

stoppers, and suspend them in wire rings, or pincers. We next pour a thousandth of the decime solution into each phial; and before this operation is terminated, there is formed in the first phials, when there *should be* a precipitate, a nebulous stratum, very well marked, of about a centimetre in thickness.

At the back of the table there is a black board divided into compartments, numbered from 1 to 10, upon each of which we mark, with chalk, the thousandths of the decime liquor put into the corresponding phial. The thousandths of sea salt, which indicate an augmentation of standard, are preceded by the sign +, and the thousandths of nitrate of silver by the sign —.

When the assays are finished, the liquor of each phial is to be poured into a large vessel in which a slight excess of sea salt is kept; and when it is full, the supernatant clear liquid must be run off with a siphon.

The chloride of silver may be reduced without any perceptible loss. After having washed it well, we immerse pieces of zinc in it, and add sulphuric acid in sufficient quantity to keep up a feeble disengagement of hydrogen gas. The mass must not be touched. In a few days the silver is completely reduced. This is easily recognised by the colour and nature of the product; or by treating a small quantity of it with water of ammonia, we shall see whether there be any chloride unreduced; for it will be dissolved by the ammonia, and will again appear upon saturating the ammonia with an acid. The chlorine remains associated with the zinc in a state of solution. The first washings of the reduced silver must be made with an acidulous water, to dissolve the oxides which may have been formed, and the other washings with common water. After decanting the water of the last washing, we dry the mass, and add to it a little powdered borax. It must now be fused. The silver being in a bulky powder is to be put in successive portions into a crucible as it sinks down. The heat should be at first moderate; but towards the end of the operation, it must be pretty strong, to bring into complete fusion the silver and the scoriæ, and to effect their complete separation. In case it should be supposed that the whole of the silver had not been reduced by the zinc, a little carbonate of potash should be added to the borax. The silver may also be reduced by exposing the chloride to a strong heat, in contact with chalk and charcoal.

The following remarks by M. Gay-Lussac, the author of the above method, upon the effect of a little mercury in the humid assay, are important: —

It is well known that chloride of silver blackens the more readily when it is exposed to an intense light, and that even in the diffused light of a room it becomes soon sensibly coloured. If it contains four to five thousandths of mercury, it does not blacken; it remains of a dead white: with three thousandths of mercury, there is no marked discolouring in diffused light; with two thousandths it is slight; with one it is much more marked, but still it is much less intense than with pure chloride. With half a thousandth of mercury the difference of colour is not remarkable, and is perceived only in a very moderate light.

But when the quantity of mercury is so small that it cannot be detected by the difference of colour in the chloride of silver, it may be rendered quite evident by a very simple process of concentration. Dissolve one gramme of the silver supposed to contain $\frac{1}{4}$ of a thousandth of mercury, and let only $\frac{1}{4}$ of it be precipitated, by adding $\frac{1}{4}$ of the common salt necessary to precipitate it entirely. In thus operating, the $\frac{1}{4}$ thousandth of mercury is concentrated in a quantity of chloride of silver four times smaller: it is as if the silver having been entirely precipitated, four times as much mercury, equal to two thousandths, had been precipitated with it.

On taking two grammes of silver, and precipitating only $\frac{1}{4}$ by common salt, the precipitate would be, with respect to the chloride of silver, as if it amounted to four thousandths. By this process, which occupies only five minutes because exact weighing is not necessary, $\frac{1}{10}$th of a thousandth of mercury may be detected in silver.

It is not useless to observe that, in making those experiments, the most exact manner of introducing small quantities of mercury into a solution of silver, is to weigh a minute globule of mercury, and to dissolve it in nitric acid, diluting the solution so that it may contain as many cubic centimetres as the globule weighs of centigrammes. Each cubic centimetre, taken by means of a *pipette*, will contain one milligramme of mercury.

If the ingot of silver to be assayed be found to contain a greater quantity of mercury —one thousandth, for example—the humid process ought, in this case, either to be given up or to be compared with cupellation.

When the silver contains mercury, the solution from which the mixed chlorides are precipitated does not really become clear.

Silver containing mercury, put into a small crucible, and mixed with lamp black, to prevent the volatilisation of the silver, was heated for three quarters of an hour in a muffle, but the silver increased sensibly in weight. This process for separating the

Digitized by Google

mercury, therefore, failed. It is to be observed, that mercury is the only metal which has thus the power of disturbing analysis by the humid way.

The error caused by the presence of mercury may be avoided by the addition of a small quantity of acetate of soda to the solution of the silver in nitric acid, previous to addition of the chloride of sodium, as this salt prevents the precipitation of the mercury.—*Levol, Gay-Lussac.*

The process employed in assaying gold bullion, by the present assayers to the Mint and Bank of England, is similar to that practised at the Paris Mint. The quantity operated on is half a gramme. This quantity, having been accurately weighed, is wrapped in paper with a portion of pure silver, about equal to three times that of the gold the alloy is supposed to contain, and submitted to cupellation with lead in the manner above described. The button is then hammered into a flattened dish, about the size of a sixpence, and afterwards annealed and passed through laminating rolls until it is reduced to a riband from 2½ to 3 inches in length; after which it is again annealed, and coiled into a spiral by rolling between the finger and thumb. The *cornet* is next placed in a small flask containing about an ounce of pure nitric acid of 22 B. (= 1·180 specific gravity), and boiled for 10 minutes. The acid is carefully poured off, and the cornet again boiled with nitric acid of 32 B. (1·280 specific gravity) for 20 minutes; and this second boiling with the stronger acid is repeated and continued about 10 minutes. In the second and third boilings a small piece of charcoal should be introduced into the flask, as recommended by Gay-Lussac, in order to prevent the ebullition taking place irregularly and with sudden bursts, which would be liable to break the cornet, and eject a portion of the liquid from the flask. The cornet is then washed and annealed as above. The return is made to the Mint in decimals or thousandths, and the assayer's weights are so subdivided as to give him the value in thousandths of the original ½ gramme taken.

To the Bank the return is made to the ¼th of a carat grain better or worse than standard. The late Master of the Mint caused Tables to be prepared for the conversion of the reports of assays expressed in carats into decimals, and conversely, which are in general use for this purpose. In order to ascertain the amount of error due to the surcharge, a number of *proofs* are passed through the process simultaneously with the alloys. These proofs consist of weighed portions of absolutely pure gold, to which are added a proportion of copper equal to that estimated to exist in the alloy to be assayed. The excess of weight in these proofs gives the amount to be deducted. It generally varies from 0·2 to 0·5 parts in 1000.

The last traces of silver may be removed from the cornet by treating it before the final annealing with fusing bisulphate of potash in a porcelain crucible. When sufficiently cool, the whole is heated with hot water containing a little sulphuric acid, and the cornet dried and ignited. By this means gold may be obtained of almost absolute purity, or $\frac{1000}{1000}$, as it is termed.

The following examples will show the difference in the results, and the degree of accuracy attainable, by the various methods described.

Ten grains of pure gold, alloyed with three times its weight of silver, cupelled and boiled with acid at 22° B., and 32° B., once weighed 10·016.

Ten grains of a half-sovereign, with silver, &c., and acid at 22°, and twice at 32° B.,

gave 915·4
again, 915·6

With acid, as before, and bisulphate of potash, 915·2
again, 915·2

Pure gold alloyed with copper, to bring it to standard, cupelled with silver and lead, and treated with acids and bisulphate, gave in one case precisely the same as was taken originally, or $\frac{1000}{1000}$, and in another 999·98.

In accurate assaying of gold bullion, it is of course absolutely necessary that the acids should be pure, and that the silver used should be most carefully freed from the traces of gold which it usually contains.

Instead of charcoal or coke, which are generally used for cupellation, much advantage has been found in employing the best anthracite: reduced to the proper size, it contains very little ash, is free from slag or clinker, and allows the heat to be maintained at one steady temperature for many hours, which is a matter of great importance to the assayer.*

ASSAYING OF GOLD.—In estimating or expressing the fineness of gold, the whole mass spoken of is supposed to weigh 24 carats of 12 grains each, either real, or merely

* The most useful works on this subject are,— Chaudet, "L'Art de l'Essayeur;" the work of Gay-Lussac mentioned in the text; "Manuel complet de l' Essayeur," par Vauquelin and D'Arcet, edited by Vergnaud, Paris, 1836 (a most useful little work); Bodemann, "Anleitung zur Berg- und Huttenmannischen Probierkunst," Clausthal, 1815; (and perhaps the best of them all) the "Scheikundig Handbock voor Essaijeurs Goud und Zilversmeden" by Stratingh, Groningen, 1821.

Digitized by Google

proportional, like the assayer's weights; and the pure gold is called fine. Thus, if gold be said to be 23 carats fine, it is to be understood that, in a mass weighing 24 carats, the quantity of pure gold amounts to 23 carats.

In such small work as cannot be assayed by scraping off a portion and cupelling it, the assayer endeavours to ascertain its fineness or quality by the touch. This is a method of comparing the colour and other properties of a minute portion of the metal with those of small bars, the composition of which is known. These bars are called touch-needles, and are rubbed upon a smooth piece of black basalt or pottery, which, for this reason, is called the touchstone. Black flint slate will serve the same purpose. Sets of gold needles may consist of pure gold; of gold, 23½ carats with ½ carat of silver; 23 carats of gold with one carat of silver; 22½ carats of gold with 1½ carat of silver; and so on, till the silver amounts to four carats; after which the additions may proceed by whole carats. Other needles may be made in the same manner, with copper instead of silver; and other sets may have the addition, consisting either of equal parts of silver and copper, or of such proportions as the occasions of business require. The examination by the touch may be advantageously employed previous to quartation, to indicate the quantity of silver necessary to be added.

In foreign countries, where trinkets and small work are required to be submitted to the assay of the touch, a variety of needles is necessary, but they are not much used in England. They afford, however, a degree of information which is more considerable than might at first be expected. The attentive assayer compares not only the colour of the stroke made upon the touchstone by the metal under examination with that produced by his needle, but will likewise attend to the sensation of roughness, dryness, smoothness, or greasiness, which the texture of the rubbed metal excites when abraded by the stone. When two strokes perfectly alike in colour are made upon the stone, he may then wet them with aquafortis, which will affect them very differently if they be not of similar compositions; or the stone itself may be made red-hot by the fire, or by the blowpipe, if thin black pottery be used; in which case the phenomena of oxidation will differ according to the nature and quantity of the alloy. Six principal circumstances appear to affect the operation of parting; namely, the quantity of acid used in parting, or in the first boiling; the concentration of this acid; the time employed in its application; the quantity of acid made use of in the *reprise*, or second operation; its concentration; and the time during which it is applied. From experiment, it has been shown that each of these unfavourable circumstances might easily occasion a loss of from the half of a thirty-second part of a carat, to two thirty-second parts. The assayers explain their technical language by observing that, in the whole mass consisting of twenty-four carats, this thirty-second part denotes 1-768th part of the mass. It may easily be conceived, therefore, that if the whole six circumstances were to exist, and be each productive of errors falling the same way, the loss would be very considerable.

It is therefore indispensably necessary that one uniform process should be followed in the assays of gold; and it is a matter of astonishment that such an accurate process should not have been prescribed by Government for assayers, in an operation of such great commercial importance, instead of everyone being left to follow his own judgment. The process recommended in the old French official report is as follows: Twelve grains of the gold intended to be assayed must be mixed with thirty grains of fine silver, and cupelled with 108 grains of lead. The cupellation must be carefully attended to, and all the imperfect buttons rejected. When the cupellation is ended, the button must be reduced, by lamination, into a plate of 1½ inches, or rather more, in length, and four or five lines in breadth. This must be rolled up upon a quill, and placed in a matrass capable of holding about three ounces of liquid, when filled up to its narrow part. Two ounces and a half of very pure aquafortis, of the strength of 20 degrees of Baumé's areometer, must then be poured upon it; and the matrass being placed upon hot ashes, or sand, the acid must be kept gently boiling for a quarter of an hour: the acid must then be cautiously decanted, and an additional quantity of 1½ ounces must be poured upon the metal, and slightly boiled for twelve minutes. This being likewise carefully decanted, the small spiral pieces of metal must be washed with filtered river water, or distilled water, by filling the matrass with this fluid. The vessel is then to be reversed, by applying the extremity of its neck against the bottom of a crucible of fine earth, the internal surface of which is very smooth. The annealing must now be made, after having separated the portion of water which had fallen into the crucible; and lastly, the annealed gold must be weighed. For the certainty of this operation, two assays must be made in the same manner, together with a third assay upon gold of twenty-four carats, or upon gold the fineness of which is perfectly and generally known.

No conclusion must be drawn from this assay, unless the latter gold should prove to

Digitized by Google

be of the fineness of twenty-four carats exactly, or of its known degree of fineness; for, if there be either loss or surplus, it may be inferred that the other two assays, having undergone the same operation, must be subject to the same error. The operation being made according to this process by several assayers, all the assayers must have obtained an uniform result without communication with each other.

The phenomena of the cupellation of gold are the same as of silver, only the operation is less delicate, for no gold is lost by evaporation or penetration into the bone-ash, and therefore it bears safely the highest heat of the assay furnace. The button of gold never vegetates or spits, and need not therefore be drawn out to the front of the muffle, but may be left at the further end till the assay is complete. Copper is retained more strongly by gold than it is by silver; so that with it 16 parts of lead are requisite to sweat out 1 of copper; or, in general, twice as much lead must be taken for the copper alloys of gold as for those of silver. When the copper is alloyed with very small quantities of gold, cupellation would afford very uncertain results; we must then have recourse to liquid analysis.

M. Vauquelin recommends to boil 60 parts of nitric acid at 22° Baumé, on the spiral slip, or cornet of gold and silver alloy, for twenty-five minutes, and replace the liquid afterwards by acid of 32°, which must be boiled on it for eight minutes. This process is free from uncertainty, when the assay is performed upon an alloy containing a considerable quantity of copper. But this is not the case in assaying finer gold; for then a little silver always remains in the gold. The surcharge which occurs here is 2 or 3 thousandths; this is too much, and it is an intolerable error when it becomes greater, which often happens. This evil may be completely avoided by employing the following process of M. Chaudet. He takes 0·500 of the fine gold to be assayed; cupels it with 1·500 of silver and 1·000 of lead; forms, with the button from the cupel, a riband or strip three inches long, which he rolls into a cornet. He puts this into a matrass with acid at 22° B., which he boils for 3 or 4 minutes. He replaces this by acid of 32° B., and boils for ten minutes; then decants off, and boils again with acid of 32°, which must be finally boiled for 8 or 10 minutes.

Gold thus treated is very pure. He washes the cornet, and puts it entire into a small crucible permeable to water; heats the crucible to dull redness under the muffle, when the gold assumes the metallic lustre and the cornet becomes solid. It is now taken out of the crucible and weighed.

When the alloy contains platinum, the assay presents greater difficulties. In general, to separate with accuracy the platinum from the gold, we must avail ourselves of a peculiar property of platinum; when alloyed with silver, it becomes soluble in nitric acid. Therefore, by a proper quartation of the alloy by cupellation, and boiling the button with nitric acid, we may get a residuum of pure gold. If we were to treat the button with sulphuric acid, however, we should dissolve nothing but the silver. The copper is easily removed by cupellation. Hence supposing that we have a quarternary compound of copper, silver, platinum, and gold, we first cupel it, and weigh the button obtained; the loss denotes the copper. This button, treated by sulphuric acid, will suffer a loss of weight equal to the amount of silver present. The residuum, by quartation with silver and boiling with nitric acid, will part with its platinum, and the gold will remain pure. For more detailed explanations, see PLATINUM. For the analysis of ores, see the individual metals.—T. H. H.

ASTERIA (*Starstone*). The name first used by Pliny, to denote those varieties of sapphire which display diverging rays of light.

151

ASTRAGAL. An ornamental moulding, generally used to conceal a junction in either wood or stone.

ASTRAGAL PLANES. Planes fitted with cutters for forming astragal mouldings. They are commonly known as moulding planes.

ASTRAGAL TOOL, for turning. By using a tool shaped as in *fig.* 151, the process of forming a moulding or ring is greatly facilitated, as one member of the moulding is completed at one sweep, and we are enabled to repeat it any number of times with exact uniformity.

ASTRALITE. A glass resembling AVENTURINE (which see), but containing crystals of a compound of copper, which by reflected light exhibit a dichroitic iridescence of dark red and greenish-blue. It is said to be made with 80 parts of flint, 120 parts of oxide of lead, 72 parts of carbonate of soda, and 18 parts of anhydrous borax. To this is added 24 parts of scale oxide of copper, and 1 part of scale oxide of iron. These are melted in a Hessian crucible, at the heat of an ordinary air furnace, and left to cool slowly without being moved.

ATHERINA. See SARDINE.

ATMOMETER (*ἀτμὸς, vapour; μέτρον, a measure*). An instrument to measure

Digitized by Google

the quantity of water evaporated in a given time under ordinary atmospheric conditions.

ATACAMITE. A native oxychloride of copper, originally found in the desert of Atacama in Peru. It forms small rhombic crystals, varying in colour from leek to emerald green.

ATOM. (*ἀ, not; τεμνω, I cut.*) An indivisible particle.

With few exceptions, the views promulgated by Dr. Dalton are received by chemists. They may be thus expressed: All elementary bodies are formed of individual atoms, the different species of which unite, generally by twos, in a small number of groups, constituting compound atoms of the first order, always mechanically indivisible, but chemically divisible, and, in their turn, constituting all the other orders of composition by a series of analogous combinations.

We are not enabled by direct experiment to determine the condition of any ultimate atom of matter; but the results furnished by chemical science clearly point to the existence of elementary units, from which all the infinite varieties of matter are formed. Sir Isaac Newton thus expresses himself:—"All things considered, it seems probable that God, in the beginning, formed matter in solid, massy, hard, impenetrable, movable particles, of such sizes, figures, and with such other properties, and in such proportions to space, as most conduced to the end for which He formed them; and that these primitive particles, being solids, are incomparably harder than any porous bodies compounded of them; even so hard as never to wear or break to pieces; no ordinary power being able to divide what God Himself made one in the first creation. While the particles continue entire, they may compose bodies of one and the same nature and texture in all ages; but should they wear away, or break in pieces, the nature of things depending on them would be changed. Water and earth composed of old worn particles would not be of the same nature and texture now with water and earth composed of entire particles at the beginning. And therefore, that nature may be lasting, the changes of corporeal things are to be placed only in various separations, and new associations, and motions of these permanent particles; compound bodies being apt to break, not in the midst of solid particles, but where those particles are laid together and touch in a few points."—*Horsley's Newton.*

With the metaphysical theories, which would lead us to regard all matter as mere accumulations of force, it would not be proper at present to deal.

Experimental philosophy has proved to us that the conditions of matter are determined by certain *polar-attractive* forces; and that these are opposed or balanced by *heat, electricity,* and the force which regulates chemical combination. Consequently every ultimate atom of matter must be regarded as the centre of such a set of physical forces surrounding it as an atmosphere.

ATOMIC THEORY. The question as to whether matter be or be not infinitely divisible, has been debated from the earliest times, and is probably as far from a settlement as ever; we can, however, scarcely conceive of the existence of matter at all, if there be no limit to its divisibility. It is easy to demonstrate that a mathematical line is infinitely divisible, but a mathematical line is only an ideal thing; having only one dimension, it can have no physical existence. We have, therefore, no hesitation in admitting the existence of atoms of matter—of particles infinitely small, it is true, as regards our perceptions, far exceeding in minuteness the finest subdivision to which we can submit a body, but yet incapable of further subdivision. To such insectible molecules the term *atom* has been applied.

If we take any substance chemically complex, we may suppose the existence of atoms in this body, held together by the force of cohesion, which are themselves heterogeneous, being made up, in fact, of atoms of the elementary chemical constituents.

Dr. Dalton suggested the happy idea, which has been most fruitful in its results, of accounting for the constancy of chemical combinations by assuming that they were composed of one or more atoms of the several elements, the weight of which atoms is represented by the combining proportions; that carbonic oxide, for instance, contains single atoms of carbon and oxygen, whilst carbonic acid is composed of one atom of carbon and two of oxygen.

It must always be remembered that the combining proportions are purely the results of experiment, and, therefore, incontestable, whatever may be the fate of this theory, which, however, has now stood its ground for many years, and done excellent service to science.

This theory offers a most satisfactory explanation of the different laws of chemical combination.

The fact of bodies uniting only in certain proportions, or multiples of those proportions, is a necessary consequence of the assumption that the weight of the elementary atoms is represented by the combining proportions; for, if they united in

Digitized by Google

any other ratio, it would involve the splitiing up of these atoms, which are assumed to be indivisible.

And, of course, the combining proportion of a compound must be the sum of the combining proportions of the constituents, since it contains within itself one or more atoms of the several constituents.

The term atom is, therefore, very often used instead of combining proportion or equivalent, a body being said to contain so many atoms of its elements.

All that is assumed in this theory is, that the atoms are of constant value *by weight*; the same atoms may be arranged in a different way, and hence, although any particular compound contains always the same elements in the atomic ratios, yet the same atoms may, by difference in arrangement, give rise to bodies agreeing in composition by weight, but differing essentially in properties. See ISOMERISM.

M. Dumas has suggested the subdivision of the combining numbers of certain elements, but this idea is quite subversive of the atomic theory, as it is at present understood.

The atomic theory is further confirmed by the observation, that if the specific heat of the elements be compared, it is found that in a large number of cases the specific heat of quantities of the bodies represented by the atomic weights coincides with each other in a remarkable manner.

The Atomic Theory of Dalton is thus set forth by the author:—

"When any body exists in the elastic state, its ultimate particles are separated from each other to a much greater distance than in any other state; each particle occupies the centre of a comparatively large sphere, and supports its dignity by keeping all the rest—which, by their gravity, or otherwise, are disposed to encroach on it—at a respectful distance. When we attempt to conceive the number of particles in an atmosphere, it is somewhat like attempting to conceive the number of stars in the universe—we are confounded with the thought. But if we limit the subject, by taking a given volume of any gas, we seem persuaded that, be the divisions ever so minute, the number of particles must be finite; just as in a given space of the universe, the number of stars and planets cannot be infinite.

"Chemical analysis and synthesis go no further than to the separation of particles one from another, and to their reunion. No new creation or destruction of matter is within the reach of chemical agency. We might as well attempt to introduce a new planet into the solar system, or to annihilate one already in existence, as to create or destroy a particle of hydrogen. All the changes we can produce consist in separating particles that are in a state of cohesion or combination, and joining those that were previously at a distance.

"In all chemical investigations it has justly been considered an important object to ascertain the relative *weights* of the simples which constitute a compound. But, unfortunately, the inquiry has terminated there; whereas, from the relative weights in the mass, the relative weights of the ultimate particles or atoms of the bodies might have been inferred, from which their number and weights in various other compounds would appear, in order to assist and to guide future investigations, and to correct their results. Now it is one great object of this work ('A new System of Chemical Philosophy') to show the importance and advantage of ascertaining *the relative weights of the ultimate particles, both of simple and compound bodies, the number of simple elementary particles which constitute one compound particle, and the number of less compound particles which enter into the formation of each more compound particle.*

"If there are two bodies, A and B, which are disposed to combine, the following is the order in which combination may take place, beginning with the most simple, namely:

1 atom of A + 1 atom of B = 1 atom of C, binary.
1 atom of A + 2 atoms of B = 1 atom of D, ternary.
2 atoms of A + 1 atom of B = 1 atom of E, ternary.
1 atom of A + 3 atoms of B = 1 atom of F quaternary.
3 atoms of A + 1 atom of B = 1 atom of G quaternary.
&c. &c.

"The following general rules may be adopted as guides in all our investigations respecting chemical synthesis:—

"1. When only one combination of two bodies can be obtained, it must be presumed to be a binary one, unless some cause appears to the contrary.

"2. When two combinations are observed, they must be presumed to be binary or ternary.

"3. When three combinations are obtained, we may expect one to be binary and the other two ternary.

"4. When four combinations are observed, we should expect one binary, two ternary, and one quaternary.

Digitized by Google

"5. A binary compound should always be specifically heavier than the mere mixture of its two ingredients.

"6. A ternary compound should be specifically heavier than the mixture of a binary and a simple, which would, if combined, constitute it, &c.

"7. The above rules and observations equally apply when two bodies, such as C and D, D and E, &c., are combined."*

For a full examination of this subject, consult "An Introduction to the Atomic Theory," by Charles Daubeny, M.D.; and "Memoirs of John Dalton and History of the Atomic Theory," by Robert Angus Smith, Ph. D.

The following exemplification of the use of this theory is given by the former of those authors:—

"Let us suppose that we have obtained from a given quantity of the substance under examination 100 grains of a salt consisting of sulphuric acid, with unknown proportions of soda and potass, but with no other ingredient. Let us set down the quantity of acid at 50 grains, from which it will follow that the weight of the two bases will together make up the remaining moiety. Now had the whole of this latter consisted of soda, the quantity of acid should have been only forty grains, because the atomic weight of sulphuric acid is 40, whilst that of soda is 32, and

as 40 : 32 :: 50 : 40

On the contrary, if the whole had been potass, then as the atomic weight of this latter is 48, the amount required to neutralise the acid would have been 60 grains; for

as 40 : 48 :: 50 : 60.

But, if we suppose half the acid to be combined with the one alkali, and half with the other, then, and only then, will the weight of the salt correspond exactly with that obtained in the experiments before us; for

as 40 : 48 :: 25 : 30; and
as 40 : 32 :: 25 : 20

50 + 50 = 100

It is easy to apply this to the case of salts containing bromine together with chlorine, assuming that we are sufficiently acquainted with the respective atomic weights of both these principles.

"The bromide and chloride of sodium are alike precipitated by nitrate of silver in the form of an insoluble bromide and chloride of that metal: now the atomic weight

Of silver is stated to be	- - -	110
„ chlorine	- - - - -	36
„ bromine	- - - - -	78·4

Suppose, therefore, we have found the precipitate to weigh 151 grains; and that, of these, 100 grains have been ascertained by other experiments to consist of silver: then

as 110 : 78·4 :: 50 : 35; and
as 110 : 36 :: 50 : 16

100 × 51 = 151.

If, therefore, half the silver were combined with bromine and the other half with chlorine, the compound produced would amount to exactly 151 grains, which is found to correspond with the quantity actually obtained."

The following Table will show the quantity of precipitate that may be expected to result from the addition of nitrate of silver to 100 grains of a salt of sodium, according to the proportion of chloride and of bromide present:—

* Dr. Angus Smith, in his "Memoirs of Dalton," thus sums up the labours of this deep thinker:—This Dalton did. He gave the first idea of *atomic weights*. Under this head came Richter and Fischer's numbers. Richter, grappling with those numbers, never could obtain a rational theory from the phenomena. Dalton's plan explains these numbers with the greatest ease, and looks on such as a necessity of the fundamental law, instead of the beginning of the inquiry, as it was to them. It seems to me, then, that what happened historically happened also intellectually. Dalton had included his predecessors in his more extensive system. He had gone to the summit of the hill, and when coming down found proofs that they had been making good progress upwards. Higgins had gone at once to the top, as it appears to me, but took no heed to make the needful observations when he was up, or he found the prospect entirely obscured. We are compelled to put reciprocal proportions in a secondary position, as it seems to me it cannot be called a law, but one of the consequences of a law; and the evidence brought to support it, otherwise than empirically, presupposes some of the principles on which the general laws depend. It was by a careful mechanical juxtaposition of parts that Dalton arrived at the idea; it is eminently mechanical, and it is remarkable that all progressive views on the subject have been so. *He introduced proportional weights into the theory, and found it to agree with facts.* His is, therefore, the *quantitative atomic theory*."

Digitized by Google

Quantity of Salt.	Quantity of Precipitate.	Quantity of Salt.	Quantity of Precipitate.	Amount of Precipitate from the two Salts.
Br. Sodium.	Br. Silver.	Ch. Sodium.	Ch. Silver.	
100	184·5	0	0	184·5
90	166·0	10	24·3	190·3
80	148·0	20	48·3	196·3
70	129·5	30	73·0	202·0
60	111·0	40	95·5	208·5
50	92·5	50	121·5	214·0
40	74·0	60	146·0	220·0
30	56·0	70	170·0	226·0
20	37·0	80	195·0	232·0
10	18·5	90	219·0	237·5
0	00·0	100	243·0	243·0

ATOMIC WEIGHTS, EQUIVALENT, CHEMICAL EQUIVALENT, COMBINING WEIGHT, or PROPORTION, are the primal quantities in which the different objects of chemistry, simple or compound, combine with each other, referred to a common body taken as unity. Oxygen is assumed by some philosophers, and hydrogen by others, as the standard of comparison. Every chemical manufacturer should be thoroughly acquainted with the combining ratios which are, for the same two substances, not only definite, but often multiple; two great truths, upon which are founded, not merely the *rationale* of his operations, but also the means of modifying them to useful purposes. The discussion of the doctrine of atomic weights, or prime equivalents, belongs to pure chemistry; but several of its happiest applications are to be found in the processes of art, as pursued upon the largest scale.

The following propositions may be regarded as the laws regulating atomic combination:—

1. *The equivalents of elementary bodies represent the smallest proportions in which they enter into combination with each other.*

2. *The equivalent of a compound body is the sum of the equivalents of its elements.*

3. *Combination takes place, whether between elements or compounds, either in the proportions of their equivalents, or in multiples of these proportions, and never in submultiples.*

4. *The law of definite ana multiple proportion is, individual compounds always contain exactly the same proportions of their elements.* See EQUIVALENTS, CHEMICAL.

ATOMIC VOLUMES. Recently it has been assumed that the elements unite invariably in equal volumes—when in the gaseous state;—or, in other words, that the atoms of bodies have always the same volume. If this doctrine be maintained, it becomes necessary to alter the atomic weights or combining numbers of certain elements. For example, water contains two volumes of hydrogen to one of oxygen; but, according to the generally received idea, it consists of single atoms of each element; it is clear, therefore, that if we are to assume that the atoms of hydrogen and oxygen have the same volume, we must either halve the atomic weight of hydrogen or double that of oxygen.

Berzelius suggested that all the atomic weights should remain the same, except those of hydrogen, nitrogen, phosphorus, chlorine, bromine, and iodine, which should halve their present value. Gerhardt, on the other hand, adopts the more convenient practice of allowing hydrogen and its congeners to retain their present atomic weights, doubling those of oxygen, sulphur, tellurium, and carbon. See Watts' "Chemical Dictionary."

ATRAMENTUM. A product of the partial oxidation of iron pyrites, which is sometimes used in making ink.

ATROPINE. ($C^{34}H^{23}NO^6$) An exceedingly poisonous alkaloid, found in deadly nightshade (*Atropa Belladonna*) and in stramonium (*Datura Stramonium*). To the freshly prepared extract of belladonna add a strong solution of caustic potash, and well mix in a mortar. Digest the resulting mass at a temperature of 80° with benzole; separate the latter, and distil off the hydrocarbon in a retort on the water bath. The residue in the retort is to be treated with water acidulated with sulphuric acid; the acid solution is to be precipitated by carbonate of soda, and the resulting atropine may then be obtained pure by crystallisation from alcohol. Atropine is used in medicine for producing dilatation of the pupil of the eye. The smallest portion of a very dilute solution rubbed on the eyelid suffices to produce the result.

ATTALEA. *A. funifera* yields the Piassaba fibre used in Brazil for ropemaking, and in this country for the manufacture of bast-brooms. Another species of Attalea yields the coquilla nut much used in turnery. See COQUILLA.

Digitized by Google

ATTAR OF ROSES, more commonly, OTTO OF ROSES. An essential oil, obtained in India. Turkey, and Persia, from some of the finest varieties of roses. It is procured by distilling rose leaves with water, at as low a temperature as possible. It is said that this perfume is prepared also by exposing the rose leaves in water to the sun; but, from the fact that under the circumstances fermentation would be speedily established, it is not probable that this is a method often resorted to. By dry distillation from salt-water baths, no doubt the finest attar is obtained. This essential oil is only used as a perfume. Attar of roses is adulterated with spermaceti and with castor oil dissolved in strong alcohol.

This adulteration may be detected by putting a small drop of the otto of roses on a piece of clean writing paper; by agitation in the air, the volatile oil soon evaporates, leaving no stain if pure; if any fixed oil is present, a greasy spot is left on the paper.

ATTENUATION. Brewers and distillers employ this term to signify the weakening of saccharine worts during fermentation, by the conversion of the sugar into alcohol and carbonic acid.

AUGER. The auger is a tool for boring either wood or stone. The *single-lip auger* is forged as a half-round bar; it is then coiled into an open spiral, with the flat side outwards. The ordinary *screw auger* is forged as a parallelled blade of steel; it is twisted red-hot; the end terminates in a worm, by which the auger is gradually drawn into the work as in the gimlet; and the two angles, or lips, are sharpened to cut at the extreme ends, and a little up the sides also. The *American screw auger* has a cylindrical shaft, around which is brazed a single fin or rib; the end is filed into a worm, as usual, and immediately behind the worm a small diametrical mortise is formed for the reception of a detached cutter, which exactly resembles the chisel edge of the centre-bit. — *Holtzapffel.*

AUGITE (*αὐγή, brilliancy*). A sub-species of PYROXENE. The name is confined to the opaque and greenish-black varieties, common in basaltic and volcanic rocks, in which it forms an important constituent, but it is never found in granite. It has a base of magnesia and lime, with little or no iron, and usually no alumina.

AURUM MUSIVUM or MOSAICUM. MOSAIC GOLD.—For the preparation of Mosaic gold the following process is recommended by Woulfe. An amalgam of 2 parts of tin and 1 part of mercury is prepared in a hot crucible, and triturated with 1 part of sal ammoniac, and 1 part of flour of sulphur; the mixture is sublimed in a glass flask upon the sand bath. In breaking the flask after the operation, the sublimate is found to consist, superficially, of sal-ammoniac, then of a layer of cinnabar, and then of a layer of Mosaic gold.

Bergman mentions a native *aurum musivum* from Siberia, containing tin, sulphur, and a small proportion of copper. Dr. John Davy gave the composition as—tin, 100; sulphur, 56·25; and berzelius as tin, 100; sulphur, 52·3. Mosaic gold is employed as a bronzing powder for plaster figures, and it is said to enter sometimes into the composition of aventurine.

AURATES. Crystalline compounds of the peroxide of gold.

AURIC ACID (*aurum*, gold.) A term sometimes used for the peroxide of gold.

AUTOGENOUS SOLDERING. A process of soldering by which metals are united, either by the ordinary solders or by lead, under the influence of a flame of hydrogen or of a mixture of hydrogen and common air.

152

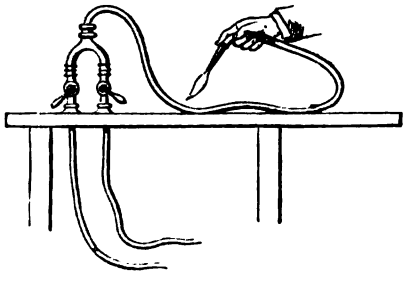

The process of using air and hydrogen was invented in France, by the Count de Richemont. Hydrogen gas is contained in a gasometer, to which a flexible tube is connected, and air is urged, from a bellows worked by the foot, through another tube, and on to the blowpipe, where the hydrogen is ignited. By means of the flexible tubes the flame can be moved up and down the line of any joint, and the connecting medium melted. *Fig.* 152.

This process has been a good deal employed for plumbers' work, especially in our naval arsenals. In Devonport dockyard, the autogenic process has been largely used.

AUTOMATIC. A term employed to designate such economic arts as are carried on by self-acting machinery. The word is employed by the physiologist to express involuntary motions.

Digitized by Google

The term *automatic* is now applied to self-acting machinery, or such as has within itself the power of regulating entirely its own movements, although the moving force is derived from without; and to what pertains to such machinery; as *automatic* operations or improvements.—*Webster.*

The word "manufacture," in its etymological sense, means any system or objects of industry executed by the hands; but, in the vicissitude of language, it has now come to signify every extensive product of art which is made by machinery, with little or no aid of the human hand, so that the most perfect manufacture is that which dispenses entirely with manual labour. It is our modern cotton and flax mills that automatic operations are displayed to most advantage; for there the elemental power HEAT has been made to animate complex organs, imparting to forms of wood, iron, and brass, an agency of seeming intelligence. And as the philosophy of the fine arts, poetry, painting, and music, may be best studied in their individual master-pieces, so may the philosophy of manufactures in these its noblest creations.

The constant aim and effect of these automatic improvements in the arts are philanthropic, as they tend to relieve the workmen either from niceties of adjustment, which exhaust his mind and fatigue his eyes, or from painful repetition of effort, which distort and wear out his frame. A well arranged power-mill combines the operation of many work-people, adult and young, in tending with assiduous skill a system of productive machines continuously impelled by a central force. How vastly conducive to the commercial greatness of a nation, and the comforts of mankind, human industry can become when no longer proportioned in its results to muscular effort, which is by its nature fitful and capricious, but when made to consist in the task of guiding the work of mechanical fingers and arms regularly impelled, with equal precision and velocity, by some indefatigable physical agent, is apparent to every visitor of our cotton, flax, silk, wool, and machine factories. This great era in the useful arts is mainly due to the genius of Arkwright. Prior to the introduction of his system, manufactures where everywhere feeble and fluctuating in their development; shooting forth luxuriantly for a season, and again withering almost to the roots like annual plants. Their perennial growth then began, and attracted capital, in copious streams, to irrigate the rich domains of industry. When this new career commenced, about the year 1770, the annual consumption of cotton in British manufactures was under four millions of pounds weight, and that of the whole of Christendom was probably not more than ten millions. In 1850 the consumption in Great Britain and Ireland was about five hundred and eighty-eight millions of pounds, and that of Europe and the United States together, one thousand and ninety-two millions. In our spacious factory apartments the benignant power of Steam summons around him his myriads of willing menials, and assigns to each the regulated task, substituting, for painful muscular effort upon their part, the energies of his own gigantic arm, and demanding, in return, only attention and dexterity to correct such little aberrations as casually occur in his workmanship. Under his auspices, and in obedience to Arkwright's policy, magnificent edifices, surpassing far in number value, usefulness, and ingenuity of construction, the boasted monuments of Asiatic, Egyptian, and Roman despotism, have, within a short period, risen up in this kingdom, to show to what extent capital, industry, and science may augment the resources of a State while they ameliorate the condition of its citizens. Such is the automatic system, replete with prodigies in mechanics and political economy, which promises, in its future growth, to become the great minister of civilisation to the terraqueous globe, enabling this country, as its heart, to diffuse, along with its commerce, the life-blood of knowledge to myriads of people. Of these truths, the present work affords decisive evidence in almost every page.—*Watts' Dictionary of Chemistry.*

AUTOMATIC ARTS. Such arts or manufactures as are carried on by self-acting machinery.

AUTOMATON. (*αὐτόματος*—automatos—*self-moving.*) In the etymological sense, this word (self-working) signifies every mechanical construction which, by virtue of a latent intrinsic force, not obvious to common eyes, can carry on, for some time, certain movements more or less resembling the results of animal exertion, without the aid of external impulse. But the term automaton is, in common language, appropriated to those mechanical artifices in which the purposely concealed power is made to imitate the arbitrary or voluntary motions of living beings. Human figures, of this kind, are sometimes styled *Androides,* from the Greek term, *like a man.*

Although, from what has been said, clockwork is not properly placed under the head Automaton, it cannot be doubted that the art of making clocks, in its progressive improvement and extension, has given rise to the production of automata. The most of these, in their interior structure, as well as in the mode of applying the moving power, have a distinct analogy with clocks; and these automata are frequently mounted in connection with watchwork. Towards the end of the 13th century, several

Digitized by Google

tower clocks, such as those at Strasburg, Lubeck, Prague, Olmutz, had curious mechanisms attached to them. The most careful historical inquiry proves that automata, properly speaking, are not older than *wheel*-clocks; and that the more perfect structures of this kind are subsequent to the general introduction of *spring*-clocks. Many accounts of ancient automata, such as the flying pigeon of Archytas of Tarentum, appear to have been but poor mechanical contrivances. "The Pneumatics of Hero of Alexandria" have been rendered accessible to the English reader by the translation of Mr. Bennet Woodcroft. In this work will be found descriptions and drawings of several curious contrivances which must be included amongst automata. The following, amongst others, may be quoted:—

"An automaton which drinks at certain times only, on a liquid being presented to it.

"An automaton which may be made to drink at any time on a liquid being presented to it.

"An automaton which will drink any quantity which may be presented to it.

"An automaton, the head of which continues attached to the body after a knife has entered the head at one side, passed completely through it, and out at the other; which animal will drink immediately after the operation."

Beckmann informs us, quoting from Plato, that Dædalus made statutes which could not only walk, but which it was necessary to tie, in order that they might not move; and, on the authority of Aristotle, he speaks of a wooden Venus, and remarks that the secret of its motion consisted in quicksilver having been poured into it.

John Muller's iron flies (or, as he is sometimes called, Regiomontanus) and his eagle which flew towards the emperor Maximilian, in Nuremberg, in the year 1740, were probably exaggerated statements; for such master-pieces of art would form now, with every aid of our improved mechanisms, the most difficult of problems. The imitation of flying creatures is extremely difficult, for several reasons. There is very little space for the moving power, and the only material possessed of requisite strength being metal must have considerable weight. Two automata of the celebrated French mechanician, Vaucauson, first exhibited in the year 1736, have been greatly admired; namely a flute-player, five and a half feet high with its cubical pedestal, which played several airs upon the German flute; and that not by any interior tube-work, but through the actual blowing of air into the flute, the motion of the tongue, and the skilful stopping of the holes with the fingers; and a duck which imitated many motions of a natural kind in the most extraordinary manner. In 1738 M. Vaucauson published a memoir, approved of by the Academy of Sciences, in which he gave a full description of the machinery employed and of the principles of its construction. See Brewster's "Letters on Natural Magic." This artist has had many imitators, of whom the brothers Droz of Chaux de Fonds were the most distinguished. Several very beautiful clock mechanisms of theirs are known. One of them with a figure which draws; another playing on the piano; a third which writes, besides numerous other combined automata. Frederick Von Knauss completed a writing machine at Vienna, in the year 1760. It is now in the model cabinet of the Polytechnic Institute, and consists of a globe two feet in diameter, containing the mechanism upon which a figure seven inches high sits, and writes upon a sheet of paper fixed to a frame, whatever has been placed beforehand upon a regulating cylinder. At the end of every line, it raises its hand and moves it sideways, in order begin a new line.

Very complete automata have not been made of late years, because they are very expensive; and by soon satisfying curiosity, they cease to interest. Ingenious mechanicians find themselves better rewarded by directing their talents to the self-acting machinery of modern manufactures. We may notice here, however, the mechanical trumpeter of Mälzl, at Vienna, and a similar work of Kauffmann, at Dresden. In French Switzerland some artists continue to make minute automata which excite no little wonder; such as singing canary birds, with various movements of a natural kind; also little birds, sometimes hardly three quarters of an inch long, in snuff-boxes and watches of enamelled gold. Certain artificial figures which have been denominated automata, hardly deserve the name; since trick and confederacy are more or less concerned in their operation. It is likely, also, that the chess player of Von Kempelen, which excited so much wonder in the last century, had a concealed confederate. The very ingenious little figures of Tendler, father and son, which imitated English horsemen and rope dancers, constructed at Eisenerz, in Styria, are probably no more true automata than the *funtoccini*, or figures of puppets, which are exhibited in great perfection in many towns of Italy, especially at Rome.

The moving power of almost all automata is a wound-up steel spring; because, in comparison with other means of giving motion, it takes up the smallest room, is easiest concealed and set a-going. Weights are seldom employed, and only in a par-

Digitized by Google

tial way. The employment of other moving powers is more limited; sometimes fine sand is made to fall on the circumference of a wheel, by which the rest of the mechanism is moved. For the same purpose water has been employed; and, when it is made to fall into an air-chamber, it causes sufficient wind to excite musical sounds in pipes. In particular cases quicksilver has been used, as, for example, in the Chinese tumblers, which is only a physical apparatus to illustrate the doctrine of the centre of gravity.

Figures are frequently constructed for playthings, which move by wheels hardly visible. An example of this simplest kind of automaton, which may be introduced here as illustrating the self-acting principles of manufactures, is shown in the figure.

Fig. 153 exhibits the outlines of an automaton, representing a swan, with suitably combined movements. The mechanism may be described, for the sake of clearness of explanation, under distinct heads. The first relates to the motion of the whole figure. By means of this part it swims upon the water, in directions changed from time to time without exterior agency. Another construction gives to the figure the faculty of bending its neck on several occasions, and, to such an extent, that it can plunge the bill and a portion of the head under water. Lastly, it is made to move its head and neck slowly from side to side.

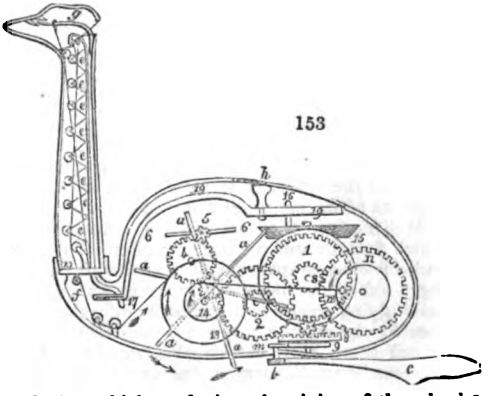

153

On the barrel of the spring exterior to the usual ratchet wheel, there is a main-wheel, marked 1, which works into the pinion of the wheel 2. The wheel 2 moves a smaller one, shown merely in dotted lines, and on the long axis of the latter, at either end there is a rudder, or water-wheel, the paddles of which are denoted by the letter *a*. Both of these rudder-wheels extend through an oblong opening in the bottom of the figure down into the water. They turn in the direction of the arrow, and impart a straight-forward movement to the swan. The chamber in which these wheels revolve is made water tight, to prevent moisture being thrown upon the rest of the machinery. By the wheel 4, motion is conveyed to the fly-pinion 5; the fly itself, 6, serves to regulate the working of the whole apparatus, and it is provided with a stop bar, not shown in the engraving, to bring it to rest, or set it a-going at pleasure. Here, as we may imagine, the path pursued is rectilinear, when the rudder-wheels are made to work in a square direction. An oblique bar, seen only in section at *b*, movable about its middle point, carries at each end a web foot *c*, so that the direction of the bar *b*, and of both feet towards the rudder-wheels, determines the form of the path which the figure will describe. The change of direction of that oblique bar is effected without other agency. For this purpose the wheel 1 takes into the pinion 7, and this carries round the crown-wheel 8, which is fixed, with an eccentric disc 9, upon a common axis. While the crown-wheel moves in the direction of the arrow, it turns the smaller eccentric portion of the elliptic disc towards the lever *m*, which, pressed upon incessantly by its spring, assumes, by degrees, the position corresponding with the middle line of the figure, and afterwards an oblique position; then it goes back again, and reaches its first situation; consequently, through the reciprocal turning of the bar *h* and the swim-foot, is determined and varied the path which the swan must pursue. This construction is available with all automata which work by wheels; and it is obvious, that we may, by different forms of the disc 9, modify, at pleasure, the direction and the velocity of the turnings. If the disc is a circle, for instance, then the changes will take place less suddenly; if the disc is an outward and inward curvature, upon whose edge the end of the lever presses with a roller, the movement will take place in a serpentine line.

The neck is the part which requires the most careful workmanship. Its outward case must be flexible, and the neck itself should therefore be made of a tube of spiral wire, covered with leather, or with a feathered bird-skin. The double line in the interior, where we see the triangles *e e e*, denotes a steel spring made fast to the plate 10, which forms the bottom of the neck; it stands loose, and needs to be merely so strong as to keep the neck straight, or to bend it a little backwards. It should not

Digitized by Google

be equally thick in all points, but it should be weaker where the first graceful bend is to be made; and, in general, its stiffness ought to correspond to the curvature of the neck of this bird. The triangles *e* are made fast at their base to the front surface of the spring; in the points of each there is a slit, in the middle of which a movable roller is set, formed of a smoothly turned steel rod. A thin catgut string *f*, runs from the upper end of the spring, where it is fixed over all these rollers, and passes, through an aperture pierced in the middle of 10, into the inside of the rump. If the catgut be drawn straight back towards *f*, the spring, and consequently the neck, must obviously be bent, and so much the more, the more tightly *f* is pulled and is shortened in the hollow of the neck. How this is accomplished by the wheel-work will presently be shown. The wheel 11 receives its motion from the pinion *s*, connected with the main wheel 1. Upon 11 there is, moreover, the disc 12, to whose circumference a slender chain is fastened. When the wheel 11 turns in the direction of the arrow, the chain will be so much pulled onwards through the corresponding advance at the point at 12, till this point has come to the place opposite to its present situation, and, consequently, 11 must have performed half a revolution. The other end of the chain is hung in the groove of a very movable roller 14; and this will be turned immediately by the unwinding of the chain upon its axis. There turns, in connection with it, however, the large roller 13, in which the catgut *f* is fastened; and as this is pulled in the direction of the arrow, the neck will be bent until the wheel 11 has made a half revolution. Then the drag ceases again to act upon the chain and the catgut; the spring in the neck comes into play: it becomes straight, erects the neck of the animal, and turns the rollers 13 and 14 back into their first position.

The roller 13 is of considerable size, in order that through the slight motion of the roller 14, a sufficient length of the catgut way be wound off, and the requisite shortening of the neck may be effected; which results from the proportion of the diameters of the rollers 11, 13, 14. This part of the mechanism is attached as near to the side of the hollow body as possible, to make room for the interior parts, but particularly for the paddle-wheels. Since the catgut *f* must pass downwards on the middle from 10, it is necessary to incline it sideways and outwards towards 13, by means of some small rollers.

The head, constituting one piece with the neck, will be depressed by the complete flexure of this; and the bill, being turned downwards in front of the breast, will touch the surface of the water. The head will not be motionless; but it is joined on both sides, by a very movable hinge, with the light ring which forms the upper part of the clothing of the neck. A weak spring, *g*, also fastened to the end of the neck, tends to turn the head backwards; but in the present position it cannot do so, because a chain at *g*, whose other end is attached to the plate 10, keeps it on the stretch. On the bending of the neck, this chain becomes slack; the spring *h* comes into operation, and throws the head so far back that, in its natural position, it will reach the water.

Finally, to render the turning of the head and neck practicable, the latter is not closely connected with the rump, while the plate 10 can turn in a cylindrical manner upon its axis, but cannot become loose outwardly. Moreover, there is upon the axis of the wheel 1, and behind it (shown merely as a circle in the engraving) a bevel wheel, which works into a second similar wheel, 15, so as to turn it in a horizontal direction. The pin, 16, of the last wheel works upon a two-armed lever, 19, movable round the point *h*, and this lever moves the neck by means of the pin 17. The shorter arm of the lever 19 has an oval aperture in which the pin 16 stands. As soon as this, in consequence of the movement of the bevel-wheel 15, comes into the dotted position, it pushes the oval ring outwards on its smaller diameter, and thereby turns the lever upon the point *h*, into the oblique direction shown by the dotted lines. The pin 16, having come on its way right opposite to its present position, sets the lever again straight. Then the lever, by the further progress of the pin in its circular path, is directed outwards to the opposite side; and, at last, when 15 has made an entire revolution, it is quite straight. The longer arm of the lever follows, of course, these alternating movements, so that it turns the neck upon its plate 10, by means of the pin 17; and, as 18 denotes the bill, this comes into the dotted position. It may be remarked, in conclusion, that the drawing of *fig.* 153 represents about half the size of which the automaton may be constructed, and that the body may be formed of thin sheet copper or brass.

Figs. 154, 155, 156, show the plan of a third automaton: a horse which moves its feet in a natural way, and draws a carriage with two figures sitting in it. The man appears to drive the horse with a whip; the woman bends forward from him in front. The four wheels of the carriage have no connection with the moving mechanism. In *fig.* 156, some parts are represented upon a larger scale. The wheel 1, in *fig.* 154, operates through the two carrier-wheels upon the wheels marked 4 and 5. By means of the axes of these two wheels, the feet are set in motion. The left fore-foot, *a*, then

Digitized by Google

the right hinder foot, move themselves backwards, and take hold of the ground with small tacks in their hoofs, while the two other legs are bent and raised, but no motion

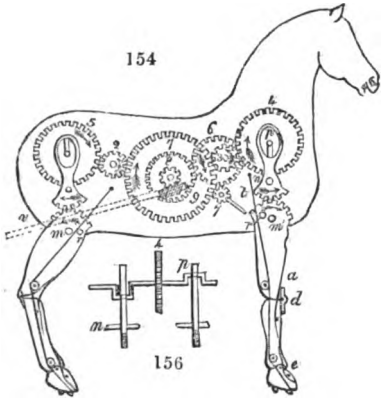

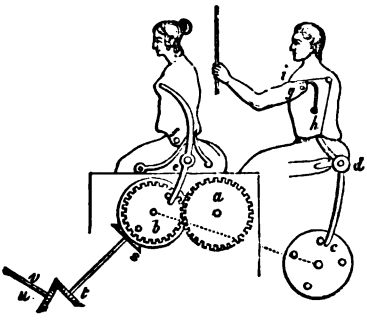

of the body takes place. The carriage, however, with which the horse is connected, advances upon its wheels. By studying the mechanism of the foot, *a*, and the parts connected with it, we can readily understand the principles of the movement. The axis of wheel 4 is crank-shaped, on both sides, where it has to operate directly on the fore-feet; but for each foot it is bent in an opposite direction, as is obvious in the front view *fig.* 156. This crank, or, properly, its part furthest from the axis, serves instead of the pin 16 in the swan, and moves like it in an oval spot, *p*, *fig.* 154, a two-armed lever, which gives motion through tooth-work, but not as in the swan, by means of a second pin. This wheel-work renders the motion smoother. The above lever has its fulcrum at *n*, *fig.* 156, about which it turns alternately, to the one and the other side, by virtue of the rotation of the wheel 4. The toothed arch, or the half-wheel on the under side, lays hold of a shorter lever, in a similar arch, upon the upper joint of the foot, which is moved forwards and backwards upon the pivot *m*. In virtue of the motions in the direction of the arrow, the foot *a* will move itself first obliquely backwards, without bending, and the body will thereby bend itself forwards. When the right hand foot makes the same motion, both the other feet are raised and bent. The joints of the foot at *d* and *e* are formed of hinges, which are so constructed that they can yield no farther than is necessary at every oblique position of the foot. With the continued rotation of the wheel 4, the lever turns itself about *n*, in an inverted direction inwards, and impels the uppermost foot-joint forwards, so that it forms an acute angle with the body in front. The foot is now twice bent upon its joints. This takes place by the traction of the chain *t*, which is led over rollers (as the drawing shows) to the foot, and is there fastened. As its upper end has its fixed point in the interior of the body, it is therefore drawn by the eccentric pin *r* standing in the vicinity of *m*, and thus bends the foot at the hinges. If there were space for it, a roller would answer better than a pin. By the recedure of the uppermost joint into the first position, the tension of the chain *t* ceases again of itself, while the pin *r* removes from it, and the foot is again extended in a straight line by the small springs operating upon its two under parts, which were previously bent stiffly by the chain. By the aid of the figures with this explanation, it will be apparent that all the fore-feet have a similar construction, that the proper succession of motions will be effected through the toothed arcs, and the position of the cranks on the axis of the wheels 4 and 5, and hence the advance of the figure must follow. The wheel 6 puts the fly 7 in motion, by means of the small wheel marked 1; on the fixed points of the 4 chains, by means of a ratchet-wheel and a catch, the necessary tension will again be produced when the chains have been drawn out a little. There is sufficient room for a mechanism which could give motion to the head and ears, were it thought necessary.

The proper cause of the motions may now be explained. In *fig.* 155, *a* is a wheel connected with the wound-up spring, by which the motion of the two human figures, and also, if desired, that of the horse, may be effected. The axis of the wheel *b* carries a disc with pins, which operate upon the two-armed lever with its fulcrum *e*, and thus cause the bending of the upper part of one of the figures, which has a hinge at *f*. On the axis of that wheel there is a second disc, *c*, for giving motion to

Digitized by Google

the other figure, which, for the sake of clearness, is shown separate, although it should sit alongside of its fellow. On the upper end of the double-armed lever *d*, there is a cord whose other end is connected with the moving arm, in the situation *i*, and raises it whenever a pin in the disc presses the under part of the lever. A spring, *h*, brings the arm back into the original position, when a pin has passed from the lever, and has left it behind. The pins at *c* and *d* may be set at different distances from the middle of the disc, whereby the motions of the figures, by every contact of another pin, are varied, and are therefore not so uniform, and consequently more natural.

For the connection of both mechanisms, namely, the carriage with the horse, various arrangements may be adopted. Two separate traction springs should be employed; one at *a*, *fig.* 155, in the coach-seat; the other in the body of the horse. In the coach-seat at *b*, the fly with its pinion, as well as a ratchet-wheel, is necessary. By means of the shaft, the horse is placed in connection with the waggon. Or the following construction may be adopted.—To the axis of *b*, *fig.* 155, a bevel wheel is to be attached, and from this the motion is to be transmitted to the bottom of the carriage with the help of a second bevel wheel *s*, connected with a third bevel wheel *t*. This again turns the wheel *u*, whose long axis, *v*, goes to the middle of the horse's body, in an oblique direction, through the hollow shaft. This axis carries an endless screw, 9, *fig.* 154, with very oblique threads, which works into the little wheel 8, corresponding to the wheel 1, through an opening in the side of the horse, and in this way sets the mechanism of the horse a-going. With this construction of *fig.* 155, a spring of considerable strength is necessary, or if the height of the carriage-seat does not afford sufficient room, its breadth will answer for placing two weaker springs alongside of each other upon a common barrel.

AVENA. A genus of corn-bearing grasses. The *A. sativa* is the common oat.

AVENTURINE. (*Aventurine*, Fr.) A variety of quartz, which is minutely spangled throughout with yellow scales of mica; is known as *Aventurine quartz*. It is usually translucent, and of a grey, brown, or reddish-brown colour. There is also an *Aventurine felspar* (*Feldspath aventuriné*, Fr.). Commercially, in France and some other parts of Europe, the name of *Pierre de soleil* is given to the finest varieties of the felspar aventurine; some lapidaries, however, calling this stone by the name of *Aventurine orientale*. This aventurine occurs at Capa de Gata, in Spain; it has reddish and yellow internal reflections.

AVENTURINE GLASS has been manufactured on a large scale, for a long period, at the glass-works of Murano, near Venice. According to Wöhler's examination, aventurine glass owes its golden iridescence to a crystalline separation of metallic copper from the mass coloured brown by the peroxide of iron.

C. Karsten analysed the artificial aventurine from the glass manufactory of Bigaglia, in Venice, and found it to contain—

Silicic acid	67·3
Lime	9·0
Protoxide of iron	3·4
Binoxide of tin	2·3
Protoxide of lead	1·0
Metallic copper	4·0
Potash	5·3
Soda	7·0

These numbers agree in a remarkable manner with the results formerly obtained by Péligot, and may therefore be regarded as truly representing the composition of the glass.

AVENTURINE GLAZE for porcelain, exhibits a crystalline separation of green oxide of chromium from the brown ferruginous mass of the glaze producing a similar effect to the glass. This glaze is prepared as follows, according to A. Wächter:—

31	parts	of fine lixiviated dry porcelain earth from Halle,
43	„	dry quartz sand,
14	„	gypsum,
12	„	fragments of porcelain,

are stirred up with 300 parts of water, and by repeated straining through a linen sieve uniformly suspended in it, and intimately mixed. To this paste is added, under constant agitation, and one after the other, aqueous solutions of

19	parts	bichromate of potash,
100	„	protosulphate of iron,
47	„	acetate of lead,

Digitized by Google

and then so much solution of ammonia that the iron is completely separated. The salts of potash and ammonia are removed by frequent decantation with spring water.

The baked porcelain vessels are dipped into the pasty mixture obtained as above described, in the same manner as with other glazes, and then fired in the porcelain furnace. After this they are covered with a brown glaze, which in reflected light appears to be filled with a countless number of light gold spangles.

A thin fragment of the glaze appears, under the microscope, by transmitted light, as a clear brownish glass, in which numerous transparent green six-sided prisms of oxide of chromium, and some brownish crystals, probably of oxide of chromium and peroxide of iron, are suspended. The oxide of chromium, therefore, separates, on the slow cooling of the glaze in the porcelain furnace, from the substance of the glaze — a silicate of potash, lime, and alumina, saturated with the peroxide of iron — and shines through the brownish mass with a golden colour. When the aventurine glaze is mixed with an equal amount of colourless porcelain glaze, the glassy mass no longer has a brown colour after the burning, but a light greenish-grey, and the eliminated crystalline spangles likewise exhibit in reflected light their natural green colour.

AVENA SATIVA. The common oat (*which see*).

AVERRUNCATOR. A pair of pruning shears, which, on being mounted on a pole some ten feet long, and actuated by a string of catgut, can be used for pruning at a considerable distance above the head.

AVOCADO PEAR OIL. An oil obtained from the oleaginous fruit the Avocado pear-tree (*Laurus Persea*), a native of Trinidad. A portion of this oil having been submitted to Dr. Hofmann by the Governor of Trinidad, he reported on its character:— "According to my present experience, the oil of the Avocado pear is less valuable as a lubricating material. To make it fit for the higher classes of machinery, its mucilaginous constituents must be removed by the same refining process requisite for its adaptation in illuminating purposes.

"On the other hand, the oil of the Avocado pear is very applicable for the production of good soap. I have the honour of transmitting to your Excellency specimens prepared with the oil: the smaller one, which possesses a yellow colour, is prepared with the oil in its original condition; the larger one is made with a portion of oil which had previously been bleached by chlorine. From this specimen it is obvious that the oil, although poor in stearine, nevertheless furnishes a soap which is tolerably hard and solid. I have even now no hesitation in stating that, for the purposes of the soap-maker, the oil of the Avocado pear will have, at least, the same value as palm oil."

AXE. A tool much used by carpenters for cleaving and roughly fashioning blocks of wood. It is a thin iron wedge with an oblong steel edge, parallel to which, in the short base, is a hole for receiving and holding fast the end of a strong wooden handle.

AXE STONE. A sub-species of *jade* found in Corsica, Saxony, and on the banks of the Amazon. It is a silicate of magnesia and alumina coloured by oxide of chromium. See JADE.

AXINITE. A silica-borate of alumina and lime. It is so named from the axe-like bevelling of its lateral edges. It is found in St. Just in Cornwall, in France, Norway, and Saxony.

AXLES, of carriages. See WHEEL CARRIAGES.

AXUNGE. Hog's lard. See FAT and OILS.

AYR STONE, called also Scotch stone and snake stone, is much in request as a polishing stone for marble and for copper plates. These stones are always kept damp, or even wet, to prevent their becoming hard.

The harder varieties of Ayr stone are now employed as whetstones.

AZALÏNE. See ANILINE RED.

AZIMUTH COMPASS. The azimuth compass is used chiefly to note the actual magnetic azimuth, or that arch of the horizon intercepted between the azimuth, or vertical circle passing through the centre of any heavenly body and the magnetic meridian.

The card of the azimuth compass is subdivided into exact degrees, minutes, and seconds. To the box is fixed two "sights," through which the sun or a star may be viewed. The position into which the index of the sights must be turned to see it, will indicate on the card the azimuth of the star. When the observations are intended to be exact, telescopes take the place of the sights. By this instrument we note the actual magnetic azimuth; and, as we know the azimuth calculated from the N. and S. line, the variation of the needle is readily found.

Digitized by Google

AZOBENZIDE. ($C^{24}H^{10}N^2$) A peculiar substance formed by acting with an alcoholic solution of potash upon nitrobenzole, or, as it is sometimes called, artificial oil of bitter almonds. (See NITROBENZOLE.) If nitrobenzole, dissolved in alcohol, with the addition of solid potash, be distilled, a complex and by no means well understood reaction occurs. The azobenzide distils over mixed with aniline. The fluid treated with hydrochloric acid, to dissolve the aniline, is passed through a wet filter; the aniline salt passes through, leaving the azobenzide as a red oil, which in a few moments solidifies into a mass of rich golden-brown crystals of considerable size, even when working on a very small quantity. The alcohol enters into the reaction, and oxalic acid is formed, which unites with the potash. Four equivalents of nitrobenzole and two equivalents of alcohol appear to yield one equivalent of azobenzide, two equivalents of aniline, four equivalents of oxalic acid, and eight equivalents of water; or, in symbols —

$$\underbrace{4C^{12}H^5NO^4}_{\text{Nitrobenzole.}} + \underbrace{2C^4H^6O^2}_{\text{Alcohol.}} = \underbrace{C^{24}H^{10}N^2}_{\text{Azobenzide.}} + \underbrace{2C^{12}H^7N}_{\text{Aniline.}} + \underbrace{4C^2O^3}_{\text{Oxalic acid.}} + \underbrace{8HO}_{}.$$

Azobenzide yields numerous derivations. With fuming nitric acid it gives two nitro compounds; viz., nitroazobenzide and binitroazobenzide. Azobenzide, treated with sulphide of ammonium, yields an alkaloid called benzidine, $C^{24}H^{12}N^2$.—C. G. W.

AZOBENZOIDE. When bitter almonds are distilled, *per descensum*, an oil is obtained; if the latter be treated with ammonia, and the substance thus formed be treated with ether, a white powder remains, which is probably impure hydrobenzamide.—C. G. W. See Watts' "Chemical Dictionary"

AZOBENZOYLE. A substance formed simultaneously with hydrobenzamide and benzydramide, when oil of bitter almonds is treated with ammonia.—C. G. W.

AZOTE. See NITROGEN.

AZOTIZED, said of certain vegetable substances, which, as containing azote, were supposed at one time to partake, in some measure, of the animal nature. The vegetable products, indigo, cafeine, gluten, and many others, contain abundance of azote.

AZURE. This term was applied by Pliny to the blues of the ancients. "Cæruleum, or azure, is of three kinds: the Egyptian (artificial); the Scythian (natural), which is inferior; the Cyprian, the best."—(*Theophrastus*, also *Pliny*.) Girardin, writing of the ancient colours, says, "This *azure*, which has thus endured above 1700 years, may be cheaply and easily made thus: 15 parts, *by weight*, of carbonate of soda, 20 parts of opaque flints, and 3 parts of copper filings, are strongly heated for two hours, and the mixture will result in a fine deep sky-blue." The Egyptian blue, or Alexandrian frit, is a pulverised blue glass; it was once thought to contain cobalt, but all analyses prove it to be a silicate of copper.

The term Azure has been applied to smalts. See COBALT, SMALT, and ULTRAMARINE.

AZURINE. See ANALINE BLUE, and ANALINE GREEN.

AZURITE. This term has been applied to several blue minerals, which have little in common. Beudant and Dana use it to siguify the blue carbonate of copper — now termed Chessylite by Brook and Miller, from its occurring in fine crystalline forms at Chessy, near Lyons; hence commonly called *Chessy copper*.

Azurite is also applied to the *Lazulite* of Dana; which is again called *Azure stone* and blue spar by others.

The same term is also given to the Lapis lazuli, from which ultramarine is obtained.

This want of agreement between mineralogists — leading them to adopt names independent one of the other (names frequently taken from some locality in which the writer knows the mineral to be found) — produces great confusion, and retards the progress of knowledge.

B

BABLAH. The rind or shell which surrounds the fruit of the *Mimosa cineraria*; it comes from the East Indies, and also from Senegal, under the name of Neb-neb. It contains gallic acid, tannin, a red colouring matter, and an azotized substance; but the proportion of tannin is smaller than in sumach and galls, in reference to that of gallic acid, which is considerable in the bablah. It has been used in dyeing cotton, for producing various shades of drab, as a substitute for the more expensive astringent dye-stuffs.

BACK. A mining term. The back of a mineral lode is that part which is nearest the surface. The back of a level is the ground between it and the level above it.

Digitized by Google

BACK. A brewer's utensil—the reservoir for receiving the wort.

BABUL-GUM. An inferior gum from the Babul tree, *Acacia Arabica* (*Wild*) growing in Bengal. This is sometimes called Bengal gum.

BADGER. Meles (*Blairean*, Fr., *Dachs*, Germ.) A genus of carnivorous animals belonging to the family *Mustelidæ*. *M. Taxus*, the common badger, inhabits the northern parts of Europe and Asia. The hide of the badger when properly dressed, makes the best pistol furniture; the hair is valuable for making brushes to soften the shades in painting, and is used for the best class of shaving brushes; the hind quarters, when salted and smoked, make excellent hams.

BAGASSE. The sugar-cane, in its dry crushed state, much employed for fuel in the colonial sugar-houses.

BAIN-MARIE. A vessel of water in which saucepans, &c., are placed to warm food.

BAIZE. A coarse woollen stuff with a long nap, sometimes friezed on one side.

BAKERS' SALT. The sesquicarbonate of ammonia, so called because it is often used as a substitute for yeast in bread and pastry.

BAKING. (*Cuire*, Fr.; *Backen*, Germ.) The exposure of any body to such a heat as will dry and consolidate its parts without wasting them. Thus wood, pottery, and porcelain, are baked, as well as bread and meat. See BISCUIT; BREAD.

BAL. An ancient Cornish miner's term for a mine.

BALACHONG. An article of food much used in the Eastern Archipelago, consisting of fish and shrimps pounded together.

BALÆNA. The Greenland Whale. See WHALEBONE.

BALANCE. To conduct arts and manufactures with judgment, recourse must be had to a balance. Experience proves that all material bodies existing upon the surface of the earth are constantly solicited by a force which tends to bring them to its centre, and that they actually fall towards it when they are free to move. This force is called gravity. Though the bodies be not free, the effort of gravity is still sensible, and the resultant of all the actions which it exercises upon their material points constitutes what is popularly called their *weight*. These weights are, therefore, forces which may be compared together, and by means of machines may be made to correspond or be counterpoised.

To discover whether two weights be equal, we must oppose them to each other in a machine where they act in a similar manner, and then see if they maintain an equilibrium; for example, we fulfil this condition if we suspend them at the two extremities of a lever supported at its centre, and whose arms are equal. Such is the general idea of a balance. The beam of a good balance ought to be a bar or double cone of metal, of such strength as to secure perfect inflexibility under any load which may be fitly applied to its extremities. Its arms should be quite equal in weight and length upon each side of its point of suspension; and this point should be placed in a vertical line over the centre of gravity; and the less distant it is from it, the more delicate will be the balance. Were it placed exactly in that centre, the beam would not spontaneously recover the horizontal position when it was once removed from it. To render its indications more readily commensurable, a slender rod or needle is fixed to it, at right angles, in the line passing through its centres of gravity and suspension. The point, or rather edge, of suspension, is made of perfectly hard steel, and turns upon a bed of the same. For common uses the arms of a balance can be made sufficiently equal to give satisfactory results; but, for the more refined purposes of science, that equality should never be presumed nor trusted to; and, fortunately, exact weighing is quite independent of that equality. To weigh a body is to determine how many times the weight of that body contains another species of known weight, as of grains or pounds, for example. In order to find it out, let us place the substance, suppose a piece of gold, in the left hand scale of the balance; counterpoise it with sand or shot in the other, till the index needle be truly vertical, or stand in the middle of its scale, proving the beam to be horizontal. Now remove gently the piece of gold, and substitute in its place standard multiple weights of any graduation, English or French, until the needle again resumes the vertical position, or until its oscillations upon either side of the zero point are equal. These weights will represent precisely the weight of the gold, since they are placed in the same circumstances with it, and make the same equilibrium with the weight laid in the other scale.

This method of weighing is obviously independent of the unequal length as well as the unequal weight of the arms of the beam. For its perfection two requisites only are indispensable. The first is that the points of suspension should be rigorously the same in the two operations; for the power of a given weight to turn the beam being unequal, accordingly as we place it at different distances from the centre of suspension, did that point vary in the two consecutive weighings, we should require to employ, in the second, a different weight from that of the piece of gold, in order to form an equilibrium with

Digitized by Google

the sand or shot originally put in the opposite scale; and as there is nothing to indicate such inequality in the states of the beam, great errors would result from it. The best mode of securing against such inequality is to suspend the cords of the scales from sharp-edged rings, upon knife edges, at the ends of the beam, both made of steel so hard tempered as to be incapable of indentation. The second condition is, that the balance should be very sensible—that is, when in equilibrium and loaded, it may be disturbed, and its needle may oscillate, by the smallest weight put into either of the scales. This sensibility depends solely upon the centre of suspension; and it will be the more perfect the less friction there is between that *knife-edge* surface and the plane which supports it. Both should therefore be as hard and highly polished as possible; and should not be suffered to press against each other, except at the time of weighing. Every delicate balance of moderate size, moreover, should be suspended within a glass case, to protect it from the agitations of the air, and the corroding influence of the weather. In some balances a ball is placed upon the index or needle, (whether that index stand above or below the beam,) which may be made to approach or recede from the beam by a fine-threaded screw, with the effect of varying the centre of gravity relatively to the point of suspension, and thereby increasing, at will, either the sensibility or the stability of the balance. The greater the length of the arms, the less distant the centre of gravity is beneath the centre of suspension, the better polished its central knife-edge of 30°, the lighter the whole balance, and the less it is loaded, the greater will be its sensibility. In all cases the arms must be quite inflexible. A balance made by Ramsden for the Royal Society is capable of weighing ten pounds, and turns with one hundredth of a grain, which is the seven-millionth part of the weight. In pointing out this balance, Dr. Wollaston remarked it was so delicate, that Mr. Pond, then Astronomer-Royal, when making some observations with it, found its indications affected by his relative position before it, although it was enclosed in a glass case. When he stood opposite the right arm, that end of the beam preponderated, in consequence of its becoming expanded by the radiation of heat from his body; and when he stood opposite the left arm, he made this preponderate in its turn. It is probable that Mr. Pond had previously adjusted the centres of gravity and suspension so near to each other as to give the balance its maximum sensibility consistent with stability. Were these centres made to coincide, the beam, when the weights are equal, would rest in any position, and the addition of the smallest weight would overset the balance, and place the beam in a vertical position, from which it would have no tendency to return. The sensibility in this case would be the greatest possible; but the other two requisites of level and stability would be entirely lost. The case would be even worse if the centre of gravity were higher than the centre of suspension, as the balance when deranged, if free, would make a revolution of no less than a semi-circle. — *Ure.*

BALANCE FOR WEIGHING COIN, introduced at the Bank of England in the year 1841, requires an especial notice.

Mr. William Cotton, then Deputy-Governor, and during the two succeeding years Governor of the Bank, had long regarded the mode of weighing by common hand-balances with dissatisfaction, on account of its injurious effect upon the "teller," or weigher, owing to the straining of the optic nerve by constant watching of the beam indicator, and the necessity of reducing the functions of the mind to the narrow office of influencing a few constantly repeated actions. Such monotonous labour could not be endured for hours together without moments of forgetfulness resulting in errors. Errors more constant, although less in amount, were found to be due to the rapid wearing of the knife-edges of the beam; currents of air also acting upon the pans produced undesired results; and even the breath of the "teller" sometimes turned the scale; so that in hand-weighing, the errors not unfrequently amounted to $\frac{1}{3}$rd, and even $\frac{1}{4}$ grain. At the very best, the hand-scale working at the rate of 3000 per six hours could not indicate nearer than $\frac{1}{8}$th grain.

Upon taking into consideration the inconveniences and defects of the hand-weighing system, Mr. Cotton conceived the idea that it might be superseded by a machine defended from external influences, and contrived so as to weigh coins as fast as by hand, and within the fourth of a grain. He subsequently communicated his plan to Mr. David Napier, of York Road, Lambeth, engineer, who undertook the construction of an experimental machine. Its capabilities were tested and reported upon by Mr. William Miller, of the Bank. The result was most satisfactory; more "automaton balances" were ordered; and from time to time further additions have been made, so that at present there are ten in daily operation at the Bank of England. But it was not without a struggle that the time-hallowed institution of tellers passed away. There were interests opposed to the introduction of improved, more ready, and less expensive methods; and it required all Mr. Cotton's energy of character, the influence of his intelligence in mechanics, as well as that arising from his position in

Digitized by Google

the Direction, to obtain the adoption of an invention by which a very large annual saving has been effected.

The mechanical adaptation of the principles involved in the Automaton Balance, as contrived by Mr. Napier, may be shortly explained:—The weighing beam, of steel, is forked at the ends, each extremity forming a knife-edge; and in the centre the fulcrum knife-edge extends on each side of the plate of the beam, and rests in hollows cut in a bowed cross-bar fixed to the under side of a rectangular brass plate, about 12 inches square, which is supported at the corners by columns fixed to a cast-iron table raised a convenient height on a stand of the same metal. To form a complete enclosing case, plates of metal or glass are slid into grooves down the columns. When the beam is resting with its centre knife-edge in the hollows of the cross-bar just referred to, its upper part is nearly on a level with the under-side of the brass plate, in which a long slot is made, so that the beam can be taken out when the feeding slide-box, and its plate, which covers this slot, are removed. On the top of the covering plate of the feeding slide a tube hopper is placed, and a hole in the plate communicates with the slide; another hole is pierced in the same plate exactly over one end of the beam, upon the knife-edges of which a long rod is suspended by hollows formed in a cross-bar close to its upper end, where the weighing platform is fitted. A rod is also suspended at the other end of the beam in a similar manner; but instead of a weighing plate, it has a knob at top, which, when the beam is horizontal, comes into contact with an adjustable agate point. The lower end of this pendant rod is stirrup-shaped, for holding the counterpoise. Two displacing slides are provided, one on each side of the feeding slide, and at right angles to each other; and a gripping apparatus is fixed to the under side of the brass top plate, arranged so as to hold the pendant on which the scale-plate is fitted during the change of the coin. A dipping finger is also attached to the frame of the gripping apparatus, its end passing into a small slot in the pendant rod, and acting upon a knife-edge at the lower end of the slot. There are four shafts crossing the machine; the one through which the power is applied is placed low and at the centre, and carries a pinion which gears with a wheel of twice its diameter on a shaft above; this wheel gears with two similar wheels fixed to shafts on each side of the centre. Cams for acting upon the feeding slide, through the medium of a rocking frame, are carried by the shaft placed at the end of the machine where the counterpoise hangs, and the other two shafts on the same level bear cams for working the gripping apparatus, the dipping finger, and the displacing slides.

Having described, as clearly and as popularly as we can, the general features of the mechanism, we will proceed to indicate its manner of action. Suppose, then, the hopper filled, and a hollow inclined plane about two feet long, which has been added to the hopper by the inventive genius of one of the gentlemen in the weighing-room, also loaded its whole length with the pieces to be weighed, the machine is set in motion, and the feeding slide pushes the lowest piece forward on to the weighing plate, the grippers meantime holding fast by the neck of the pendant, so as to keep the plate perfectly steady; the dipping-finger is also at its lowest position, and resting upon the knife-edge at the bottom of the slot in the pendant rod, thus keeping the beam horizontal, and the knob on the counterpoise pendant, in contact with the agate point already mentioned. When the coin is fairly placed on the weighing-plate, the grippers let go their hold of the pendant rod, and the dipping-finger is raised by its cam; if then the coin is too light, the coin end of the beam will rise along with the dipping-finger, and the counterpoise end will descend; if heavy, the beam will remain without motion, the agate point preventing it. As soon as the dipping-finger attains the proper height, and thus has allowed sufficient time for the weight of the coin to be decided, the grippers close and hold the pendant, and consequently the scale or weighing-plate, at the high level, if the coin has proved light, and been raised by the excess of weight in the counterpoise; and at the low or original level, if the coin has proved heavy. One of the displacing slides now comes forward and passes under the coin, if it is light, and therefore raised to the high level; but knocks it off, if remaining on the low level, into the "heavy" box. The other displacing slide then advances. This strikes higher than the first, and removes the light piece which the other has missed, into the receptacle for the light coin. During these operations the feeding-slide has brought forward another coin, and the process just described is repeated. The attendant is only required to replenish the inclined plane at intervals, and remove the assorted coin from the boxes. The perfection of the workmanship, and the harmony of the various actions of the machine, will be best appreciated from the fact, that 25 pieces are weighed per minute to the fineness of $\frac{1}{100}$th of a grain. This combination of great speed and accuracy would not have been possible with a beam made in the ordinary way, having the centre of gravity below the centre of action; and it was pronounced to be so by the late Mr. Clement, the

Digitized by Google

constructor of Mr. Babbage's Calculating Machine. But Mr. Napier overcame the difficulty by raising the centre of gravity so as to coincide with the centre of action, which gave it much greater sensibility; and he provided the dipping-finger, to bring the beam to a horizontal position after each weighing, instead of an influencing weight in the beam itself.

The wear and tear of these machines is found to be very small indeed; those supplied in 1842 and 1843, and in daily use ever since, weigh with the same accuracy as at first, although they may be said to have cost nothing for repairs. The principal cause of this long-continued perfection is that the beam does not oscillate, unless the coin is light, and even then the space passed through does not exceed the thickness of the coin.

In 1851, when the Moneyers were no longer *masters* of the Royal Mint, and the new authorities began to regard the process of weighing the coin in detail by hand as a laborious, expensive, and inaccurate method, the firm of Napier and Son, at an interview with Sir John Herschel, the Master, and Captain Harness, the Deputy-Master, received an order for five machines, to be designed to suit the requirements of the Mint, which involved a complete change in the mechanical arrangement of the machine as used at the Bank, it being necessary to divide the "blanks," or pieces before they are struck, into three classes: "too light," "too heavy," and "medium," or those varying between certain given limits. It would occupy too much space to attempt a description of the mechanical disposition of this machine, and it could not be satisfactorily accomplished without the aid of drawings; let it suffice, then, to say that the displacing-slides are removed, and a long vibrating conducting-tube receives the blanks as they are in turn pushed off the weighing-plate by the on-coming blanks; but, according to the weight of the blank, so the lower end of the tube is found to be opposite to one of three openings leading into three boxes. The tube is sustained in its proper position, during the descent of the blank last weighed through it, by a stop-finger, the height of which is regulated by a dipping-finger, which comes down upon a knife-edge at the lower end of a slot in the pendant-rod just when the grippers have laid hold of the rod after the weighing is finished; this finger thus ascertains the level which the knife-edge has attained, and as it brings down the stop-finger with it, the guide-tube, which is furnished with three rests, as steps in a stair, vibrates against the stop-finger, one of the three steps coming in contact with it, according to the level of the stop-finger; and the end of the guide-tube takes its place opposite the channel leading to the box in which the blank should be found. The counterpoise employed is less than the true standard weight, by the quantity which may be allowed as the limit in that direction; and in case a blank is too heavy, not only is the counterpoise raised, but a small weight, equal to the range allowed between the "too light" and "too heavy," is raised also; this small weight comes to rest on supports provided for it when the beam is horizontal, and is only disturbed by a *too heavy* blank.

These machines have proved even more accurate and rapid than those made for the Bank; and Professor Graham, the present master, amongst the improvements introduced by him into the system of the Mint, has added to the number, and dispensed entirely with the hand weighing. It is said that the saving accruing from this change alone amounts to nearly 2000*l.* per annum.

BALAS RUBY. The name applied to *rose-red* varieties of spinel. See RUBY.

BALE. A package of silk, linen, or woollen, is so called.

BALLISTIC PENDULUM. An instrument for measuring the force of cannon-balls. The ballista was an instrument used by the ancients to throw darts, &c. The ballistic pendulum derives its name from this: it consists of an iron cylinder, closed at one end, suspended as a pendulum. A ball being fired into the open end, deflects the pendulum according to the force of the blow received from the ball, thus measuring its power.

BALLOON. In France, a quantity of glass. Of *white glass*, 25 bundles of six plates each; of *coloured glass*, 12½ bundles of three plates each are called balloons.

BALLOON, AIR. A varnished silk or other bag filled with gas, or warm air, which, being specifically lighter than the atmosphere, ascends in it. Numerous attempts have been made to bring air balloons under the control of the aëronaut, so as to guide them across the currents of the atmosphere; but all of these have proved unsuccessful, the balloon and its voyagers having always moved with the aërial current, in spite of the mechanical appliances which have been adopted.

BALSAM. (*Baume*, Fr.; *Balsame*, Germ.) A native compound of ethereal or essential oils, with resin, and frequently benzoic acid. Most balsams have the consistence of honey; but a few are solid, or become so by keeping. They flow either spontaneously, or by incisions made from trees and shrubs in tropical climates. They have peculiar and sometimes powerful smells, aromatic hot tastes, but lose their odori-

Digitized by Google

ferous properties by long exposure to the air. They are insoluble in water; soluble to a considerable degree, in ether; and completely in alcohol. When distilled with water, ethereal oil comes over, and resin remains in the retort.

BALSAM, CANADA. See CANADA BALSAM.

BALSAM COPAIVA, or CAPIVI, or COPAIBA. (*Baume de Copahu*, Fr.; *Kopaiva Balsam*, Germ.) *Copaiva balsam*, balsam of copahu, or capivi, is obtained from incisions made in the trunk of the *Copaifera officinalis*, a tree which grows in Brazil and Cayenne. It is also very frequently obtained from the *C. Multijuga*, *C. Langodorfi*, and *C. Coriacea*. It is pale yellow, semi-liquid, clear and transparent, has a bitter, sharp, hot taste; a penetrating disagreeable smell; a specific gravity of from 0·950 to 0·996. It dissolves in absolute alcohol, and partially in spirits of wine, and forms with alkalis crystalline compounds. It consists of 45·59 ethereous oil, 52·75 of a yellow brittle resin, and 1·66 of a brown viscid resin. The oil contains no oxygen, has a composition like oil of turpentine, dissolves caoutchouc (according to Durand), but becomes oxidised, in the air, into a peculiar species of resin.

This substance is extensively used in medicine. It was formerly often adulterated; some unctuous oil being mixed with it, but as this is easily discovered by its insolubility in alcohol, castor oil has since been used. The presence of this cheaper oil may be detected,—1, by agitating the balsam with a solution of caustic soda, and setting the mixture aside to repose, when the balsam will come to float clear on the top, and leave a soapy thick magma of the oil below; 2, when the balsam is boiled with water, in a thin film, for some hours, it will become a brittle resin on cooling, but it will remain viscid if mixed with castor oil; 3, if a drop of the oil on white paper be held over a lamp, at a proper distance, its volatile oil will evaporate and leave the brittle resin, without causing any stain around, which the presence of oil will produce; 4, when three drops of the balsam are poured into a watch-glass, alongside of one drop of sulphuric acid, it becomes yellow at the point of contact, and altogether of a saffron hue when stirred about with a glass rod; but if sophisticated with castor oil, the mixture soon becomes nearly colourless, like white honey, though after some time the acid blackens the whole in either case; 5, if 3 parts in bulk of the balsam be mixed with one of good water of ammonia (of 0·970 specific gravity) in a glass tube, it will form a transparent solution if it be pure, but will form a white liniment if it contains castor oil; 6, if the balsam be triturated with a little of the common magnesia alba, it will form a clear solution, from which acids dissolve out the magnesia, and leave the oil transparent if it be pure, but opaque if it be adulterated. When turpentine is employed to falsify the balsam, the fraud is detected by the smell on heating the compound.

This balsam is used in the manufacture of some varieties of *tracing paper*; and many lacquers and varnishes have the balsam of copaiva as one of their constituents.

Of Balsam Capivi, we imported in 1864:—

	lbs.	Computed real value.
From United States: North Atlantic Ports - -	21,522	1,741
„ Brazil - - - - - - -	175,567	14,375
„ Other Parts - - - - - -	26,742	2,246
	223,831	18,362

BALSAM, MECCA. (*Baume de la Mecque*, *Baume du Judée*, Fr.) *Mecca balsam*, or *opobalsam*, or *Balm of Gilead*, is obtained both by incisions in, and by boiling, the branches and leaves of the *Amyris opobalsamum*, a shrub which grows in Arabia Felix and Egypt. When fresh it is turbid and whitish, becomes by degrees transparent, yellow, thickish, and eventually solid. Its smell is peculiar, but agreeable; it tastes bitter and spicy; does not dissolve completely in hot spirit of wine, and contains 10 per cent. of ethereal oil of the specific gravity 0·876.

BALSAM OF PERU. (*Baume du Pérou*, Fr.; *Peruvianischer Balsam*, Germ.) *Balsam of Peru* is extracted from the *Myroxylon Peruiferum*, a tree which grows in Peru, Mexico, &c.; sometimes by incision, and sometimes by evaporating the decoction of the bark and branches of the tree. The former kind is very rare, and is imported in the husk of the cocoa-nut, whence it is called balsam *en coque*. It is brown, transparent only in thin layers of the consistence of thick turpentine, an agreeable smell, an acrid and bitter taste; formed of two matters, the one liquid, the other granular, and somewhat crystalline In 100 parts, it contains 12 of benzoic acid, 88 of resin, with traces of a volatile oil.

The second sort, the *black* balsam of Peru, is much more common than the preceding; translucent, of the consistence of well-boiled syrup, very deep red-brown colour, an almost intolerably acrid and bitter taste, and a stronger smell than the other

Digitized by Google

balsam. Stoltze regards it as formed of 69 parts of a peculiar oil, 20·7 of a resin little soluble in alcohol, of 6·4 of benzoic acid, of 0·6 of extractive matter, and 0·9 of water.

The celebrated *Pomade Divine*, which was a few years since very celebrated, contained a considerable quantity of the balsam of Peru. One of the best recipes for its preparation was the following:—

Fine olive oil	18 ozs.
Balsam of Peru	1 oz.
Oris root	6 drachms.
Strained storax	1 drachm.

This, with some bruised nutmegs and cinnamon, was macerated in a water-bath for three hours, and then filtered.

A French authority states that, dissolved in four times its weight of alcohol, and spread upon sarsenet already covered with a layer of isinglass, it formed the *taffetas d'Angleterre*.

One thousand parts of good balsam should, by its benzoic acid, saturate 75 parts of crystallised carbonate of soda. It is employed as a perfume for pomatums, tinctures, lozenges, sealing-wax, and for chocolate and *liqueurs*, instead of vanilla, when this happens to be very dear.

M. Victor le Nouvel, who has been engaged in collecting this balsam since 1836, gives the following as the process used by the Indians to obtain it. An incision is made into the tree of about two or three inches broad, and three to four inches long. They raise the bark from the wood and apply cotton rags to it; a fire being lighted round the tree to liquefy the balsam. Fresh incisions are made higher and higher up the tree, till the cotton rags are quite saturated. It takes from ten to twelve days to effect this. The rags are next boiled, and when the liquor is cold, the balsam collects below.—*Pereira's Materia Medica.*

Balsam of Peru has been for some years exported from the state of Salvador (in 1855, 22,804 lbs., valued at 19,827 dollars). On the coast of Chiquimulilla (Guatemala) there are many trees of the description that yield the balsam, but hitherto it has not attracted the attention of the people to collect it.—*Consul's Report.*

The Balsam of Peru of Salvador is procured within the department of Sonsonate. The British Consul thus describes its production:—

In the district of Cuisnagua there are 3574 trees, which yield altogether only 600 lbs. of the gum annually. With proper care in the extraction, each tree would yield 2 lbs. to 3 lbs., making the total quantity capable of being produced in the before-mentioned district about 10,000 lbs. When the season has been more rainy than usual, the product is much lower; but in order to meet this difficulty, the Indians heat the body of the tree by fire, by this means causing the gum to exude more freely, but this operation invariably causes the decay of the tree.

The Indians employed in collecting the gum say that such trees as are well shaded yield a greater quantity; but that those which have been planted by hand yield the most. This has been proved by experience, particularly in Calcutta, where a considerable quantity is yearly collected from trees which have been so planted. During the months of December and January the gum oozes away spontaneously. This class of gum is called "calcawzate." It is orange-coloured, weighs less than the other, and emits a strong odour; is volatile and pungent.

Of Balsam of Peru we *imported*, in 1864:—

	lbs.	Computed real value.
From New Granada	18,023	£4,393
„ Other Parts	4,403	1,051
Foreign and Colonial	22,426	5,444

BALSAM STORAX. See Storax.

BALSAM OF TOLU. (*Baume de Tolu*, Fr.; *Tolutanischer Balsam*, Germ.) *Balsam of Tolu* flows from the trunk of the *Myrospermum Toluiferum*, a tree which grows in South America, on the mountains of Tolu, Timbaceo, &c. It is, when fresh, of the consistence of turpentine; is brownish-red, dries into a yellowish or reddish brittle resinous mass, of a smell like benzoin; is soluble in alcohol and ether; affords, with water, benzoic acid. It appears probable that both the balsams of Peru and of Tolu are obtained from one tree. *Balsam of Tolu* is used to manufacture Tolu lozenges, and the Syrup of Tolu for irritating coughs. It is sometimes employed by confectioners to flavour sweetmeats, by perfumers, and in the formation of *fumigating pastiles.*

BAMBOO. (*Bambou*, Fr.; *Indianisches Rohr*, Germ.) A species of cane, the

Digitized by Google

Bambos arundinacea of botanists. A most important vegetable product in the East, where it is used in the construction of houses, boats, bridges, &c. Its grain is used for bread; its fibre is manufactured into paper. Walking sticks are said to be of bamboo; they are the *ratan*, a different plant.

BANANA. An herbaceous endogenous plant *Musa sapientum*, growing in the West Indies. The Plaintain has a fruit which is used for food to an immense extent by the inhabitants of hot climates, forming, indeed, a necessary article of diet. See MUSACEÆ.

BANDANNA. A style of calico printing, in which white or brightly-coloured spots are produced upon a red or dark ground. It seems to have been practised from time immemorial in India, by binding up firmly with thread those points of the cloth which were to remain white or yellow, while the rest of the surface was freely subjected to the dyeing operations.

The European imitations have now far surpassed, in the beauty and precision of the design, the oriental patterns, having called into action the refined resources of mechanical and chemical science. The white spots are produced by a solution of chlorine, made to percolate down through the Turkey red cotton cloth, in certain points defined and circumscribed by the pressure of hollow lead types in plates, in a hydraulic press. *Fig.* 155 is an elevation of one press: A, the top of the entablature; B B, the cheeks

157

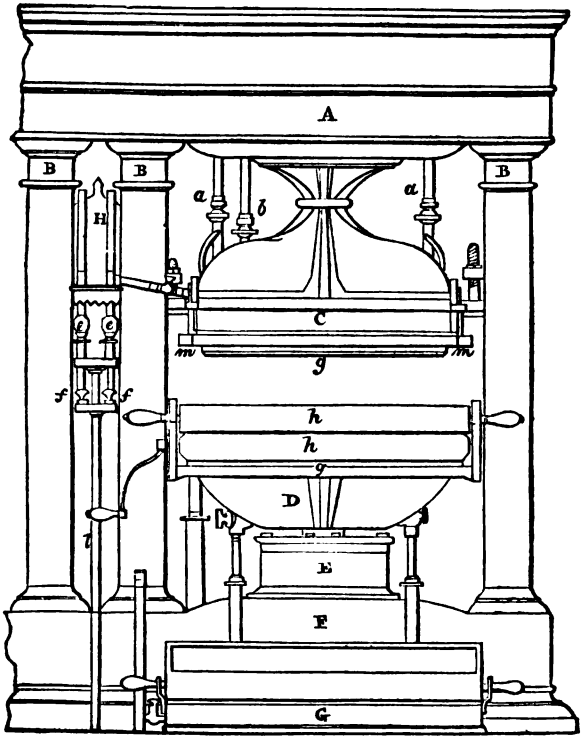

or pillars; C, the upper block for fastening the upper lead perforated pattern to; D, the lower block to which the fellow pattern is affixed, and which moves up and down with the piston of the press; E, the piston or ram; F, the sole or base; G, the water-trough for the discharged or spotted calico to fall into; H, the small cistern for the aqueous chlorine or liquor-metre, with glass tubes for indicating the height of liquor inside the cistern; *e e*, glass stopcocks, for admitting the liquor into that cistern from the general reservoir; *f f*, stopcocks for admitting water to wash out the chlorine; *g g*, the pattern lead-plates, with screws for setting the patterns parallel to each other;

Digitized by Google

m m, projecting angular pieces at each corner, perforated with a half-inch hole to receive the four guide-pins rising from the lower plate, which serve to secure accuracy of adjustment between the two faces of the lead pattern plates; *h h*, two rollers, which seize and pull through the discharged pieces, and deliver them into the water trough. To the left of D there is a stopcock for filling the trough with water; *l* is the waste tub for chlorine liquor and water of washing. The contrivance for blowing a stream of air across the cloth through the pattern holes is not represented in the figure.

Sixteen engines, similar to the above, each possessing the power of pressing with several hundred tons, are arranged in one line, in subdivisions of four, the spaces between each subdivision serving as passages to allow the workmen to go readily from the front to the back of the presses. Each occupies 25 feet, so that the total length of the apartment is 100 feet.

To each press is attached a pair of patterns in lead (or plates as they are called), the manner of forming which will be described in the sequel. One of these plates is fixed to the upper block of the press. This block is so contrived that it rests upon a kind of universal joint, which enables this plate to be applied exactly to the under fellow-plate. The latter sits on the movable part of the press, commonly called the sill. When this is forced up, the two patterns close on each other very nicely by means of the guide-pins at the corners, which are fitted with the utmost care.

The power which impels this great hydrostatic range is placed in a separate apartment, called the machinery room. This machinery consists of two press cylinders of a peculiar construction, having solid rams accurately fitted to them. To each of these cylinders three little force-pumps, worked by a steam-engine, are connected.

The piston of a large cylinder is eight inches in diameter, and is loaded with a top weight of five tons. This piston can be made to rise about two feet through a leather stuffing or collar. The other cylinder has a piston of only one inch in diameter, which is also loaded with a top weight of five tons. It is capable, like the other, of being raised two feet through its collar.

Supposing the pistons to be at their lowest point, four of the six small force-pumps are put in action by the steam-engine, two of them to raise the large piston, and two the little one. In a short time so much water is injected into the cylinders that the loaded pistons have arrived at their highest points. They are now ready for working the hydrostatic discharge presses, the water pressure being conveyed from the one apartment to the other, under ground, through strong copper tubes of small calibre.

Two valves are attached to each press, one opening a communication between the large driving cylinder and the cylinder of the press, the other between the small driving cylinder and the press. The function of the first is simply to lift the under block of the press into contact with the upper block; that of the second is to give the requisite compression to the cloth. A third valve is attached to the press for the purpose of discharging the water from its cylinder, when the press is to be relaxed in order to remove or draw through the cloth.

From 12 to 14 pieces of cloth previously dyed Turkey red, are stretched over each other as parallel as possible, by a particular machine. These parallel layers are then rolled round a wooden cylinder, called by the workmen a drum. This cylinder is now placed in its proper situation at the back of the press. A portion of the 14 layers of cloth, equal to the area of the plates, is next drawn through between them by hooks attached to the two corners of the webs. On opening the valve connected with the eight-inch driving cylinder, the water enters the cylinder of the press, and instantly lifts its lower block so as to apply the under plate with its cloth close to the upper one. This valve is then shut and the other is opened. The pressure of five tons in the one-inch prime cylinder is now brought to bear on the piston of the press, which is eight inches in diameter. The effective force here will therefore be $5 \text{ tons} \times 8^2 = 320$ tons, the areas of cylinders being to each other as the squares of their respective diameters. The cloth is thus condensed between the leaden pattern plates with a pressure of 320 tons in a couple of seconds.

The next step is to admit the bleaching or discharging liquor (aqueous chlorine, obtained by adding sulphuric acid to solution of chloride of lime) to the cloth. This liquor is contained in a large cistern in an adjoining house, from which it is run at pleasure into small lead cisterns, H, attached to the presses, which cisterns have graduated index tubes for regulating the quantity of liquor according to the pattern of discharge. The stopcocks on the pipes and cisterns containing this liquor are all made of glass.

From the measure-cistern, H, the liquor is allowed to flow into the hollows in the upper lead plate, whence it descends on the cloth, and percolates through it, extracting in its passage the Turkey-red dye. The liquor is finally conveyed into the waste pipe from a groove in the under block. As soon as the chlorine liquor has passed through, water is admitted in a similar manner to wash away the chlorine, otherwise,

Digitized by Google

upon relaxing the pressure, the outline of the figure discharged would become ragged. The passage of the discharge liquor, as well as of the water through the cloth, is occasionally aided by a pneumatic apparatus, or blowing machine, consisting of a large gasometer from which the air, subjected to a moderate pressure, may be allowed to issue and act, in the direction of the liquid, upon the folds of the cloth. By an occasional twist of the air stopcock, the workman also can ensure the equal distribution of the discharging liquor over the whole excavations in the upper plate. When the demand for goods is very brisk, the air apparatus is much employed, as it enables the workman to double his product.

The time requisite for completing the discharging process in the first press is sufficient to enable the other three workmen to put the remaining 15 presses in play. The discharger proceeds now from press to press, admits the liquor, the air, and the water; and is followed at a proper interval by the assistants, who relax the press, move forwards another square of the cloth, and then restore the pressure. Whenever the sixteenth press has been liquored, &c., it is time to open the first press. In this routine about ten minutes are employed; that is, 224 handkerchiefs (16 × 14) are discharged every ten minutes. The whole cloth is drawn successively forward, to be successively treated according to the above method.

When the cloth is removed from the press it is passed between the two rollers in front, from which it falls into a trough of water placed below. It is finally carried off to the washing and bleaching department, where the lustre of both the white and the red is considerably brightened.

By the above arrangement of presses, 1600 pieces, consisting of 12 yards each = 19,200 yards, are converted into bandannas in the space of ten hours, by the labour of four workmen.

The patterns, or plates, which are put into the presses to determine the white figures on the cloth, are made of lead in the following way:—A trellis frame of cast iron, one inch thick, with turned-up edges, forming a trough rather larger than the intended lead pattern, is used as the solid groundwork. Into this trough a lead plate, about one half-inch thick, is firmly fixed by screw-nails passing up from below. To the edges of this lead plate the borders of the piece of sheet lead are soldered, which covers the whole outer surface of the iron frame. Thus a strong trough is formed, one inch deep. The upright border gives at once great strength to the plate and serves to confine the liquor. A thin sheet of lead is now laid on the thick lead plate, in the manner of a veneer on toilette tables, and is soldered to it round the edges. Both sheets must be made very smooth beforehand, by hammering them on a smooth stone table, and then finishing with a plane; the surface of the thin sheet (now attached) is to be covered with drawing paper, pasted on, and upon this the pattern is drawn. It is now ready for the cutter. The first thing which he does is to fix down with brass pins all the parts of the pattern which are to be left solid. He now proceeds with the little tools generally used by block-cutters, which are fitted to the different curvatures of the pattern, and he cuts perpendicularly quite through the thin sheet. The pieces thus detached are easily lifted out, and thus the channels are formed which design the white figures on the red cloth. At the bottom of the channels a sufficient number of small perforations are made through the thicker sheet lead, so that the discharging liquor may have free ingress and egress. Thus one plate is finished, from which an impression is taken in the hydrostatic press, by means of printers' ink, on paper pasted upon another plate. Each pair of plates constitutes a set which may be put into presses and removed at pleasure.

BANDOLINE, called also *clysphitique* and *fixature*, a mucilage of Carrageen moss; used for stiffening the hair and keeping it in order.

BARBARY GUM. Sometimes called *Morocco gum*. The product of the *Acacia gummifera*. Imported from Tripoli, Barbary, and Morocco. See ARABIC, GUM.

BARBERRY. (*Berberris*, Lat.; *Épine-vinette*, Fr.) It is probable that this name has been given to this plant from its spines, or *barbs*. The name *Oxycanthus*, also given to it, indicates a like origin.

The barberry is a shrubby plant, common in hedges in England; sometimes called the pipperidge bush. The berries are used in housewifery. The root of this plant contains a yellow colouring matter which is soluble in water and alcohol, and is rendered brown by alkalis. The solution is employed in the manufacture of morocco leather.

BARILLA. (*Soude*, *Barille*, Fr.; *Barilla*, Germ.) A crude soda, procured by the incineration of the *salsola soda*, a plant cultivated for this purpose in Spain, Sicily, Sardinia, and the Canary Islands. In Alicante the plants are raised from seed, which is sown at the close of the year, and they are usually fit to be gathered in September following. In October the plants are usually burned. For this purpose holes are made in the earth, capable of containing a ton or a ton and a half of soda. Iron bars

Digitized by Google

are laid across these cavities, and the dried plants, stratified with dry seeds, are placed upon them. The whole is set on fire. The alkali contained in the plants is fused, and it flows into the cavity beneath, a red-hot fluid. By constantly heaping on plants, the burning is continued until the pits are full of barilla; they are then covered up with earth and allowed to cool gradually. The spongy mass of alkali, when sufficiently cold, is broken out, and, without any further preparation, it is ready for shipment. Good barilla usually contains, according to Dr. Ure's analysis. 20 per cent. of real alkali associated with muriates and sulphates, chiefly of soda, some lime, and alumina, with very little sulphur. Caustic leys made from it were formerly used in the finishing process of the hard soap manufacture.

The manufacture of barilla has greatly declined since the introduction of Le Blanc's process for artificially manufacturing soda from common salt. In 1856 we *imported* 54,608 cwts., and in 1864 the following quantities of barilla were *imported*:—

	Cwt.	Computed real value.
From Canary Islands - - -	16,450	£4,524
„ Italy: Sicily - - - -	7,736	5,028
„ Other parts - - - -	1,065	693
	25,251	10,245

BARIUM. (From *βάρυς, heavy.*) The metallic basis of the earth baryta was obtained by Davy, in 1808, by the voltaic decomposition of the moistened carbonate of baryta in contact with mercury. It may likewise be procured by passing potassium in vapour over baryta heated to redness in an iron tube, and afterwards withdrawing the reduced barium which the residuum contains, by means of mercury. The latter metal is separated by distillation in a glass retort, care being taken not to raise the temperature to redness, for the barium then decomposes glass.

Barium is a white metal, like silver, fusible under a red heat, denser than oil of vitriol, in which it sinks.—*Graham.*

BARIUM, OXIDES OF. There are two oxides of barium, a protoxide Ba^2O (barytes) and a peroxide BaO or BaO^2. See BARYTA.

BARIUM, SALTS OF:—

BROMIDE OF BARIUM. Prepared by saturating baryta water with hydrobromic acid.

CHLORIDE OF BARIUM. Made from the native sulphate (heavy spar), by igniting in a crucible with pounded coal. The commercial chloride frequently contains small quantities of the chlorides of strontian and calcium. Chloride of barium is especially used for the detection and estimation of sulphuric acid.

BARIUM, FLUORIDE OF. Prepared by neutralising baryta water by hydrofluoric acid.

BARIUM IODIDE is formed when hydriodic acid is passed over baryta at a red heat.

BARK. The outer rind of plants. Many varieties of barks are known to commerce, but the term is especially used to express either Peruvian or Jesuits' bark, a pharmaceutical remedy, or Oak bark, which is very extensively used by tanners and dyers.

The varieties known in commerce are:—

CORK BARK. (Fr. *Liége*; *Kork*, Germ.); which see.
OAK BARK. (*Tan brut*, Fr.; *Eichenrinde*, Germ.); which see.
PERUVIAN BARK. (*Quinquina*, Fr.; *Chinarinde*, Germ.); which see.
QUERCITRON BARK: which see.
WATTLE BARK: which see.

The following were our *Importations* for 1864 of barks for tanners' or dyers' use, varieties unenumerated:—

	Cwt.	Computed real value.
From Holland - - - -	49,802	£16,277
„ Belgium - - - -	133,626	44,756
„ Italy: Sardinian States -	18,411	7,596
„ Sicily - - - - -	7,945	3,277
„ Australia - - - -	39,966	22,528
„ Other Parts - - - -	19,374	6,530
	269,124	100,964

Of these barks we *exported* for tanners' use, 977 cwt.

BARK BREAD. A kind of bread prepared in many parts of Norway by the poorer peasants from the inner bark of the *Pinus Sylvestris*. See PINUS.

BARLEY. (*Orge*, Fr.; *Gerstengraupe*, Germ.;) *Hordeum*, Linn. This term is supposed to be derived from *hordus*, heavy, because the bread made from it is very

Digitized by Google

heavy. Barley belongs to the class *Endogens*, or *Monocotyledons*; *Glumel Alliance*, of Linley: natural order, *Graminaceæ*.

There are four species of barley cultivated in this country:—

1. *Hordeum hexastichon.* Six-rowed barley, or Winter-barley.
2. *Hordeum vulgare.* The Scotch bere or bigg; the four-rowed barley.
3. *Hordeum zeocriton.* Putney, fan, sprat, or battledore barley.
4. *Hordeum distichum.* Two-rowed long-eared barley, or Summer barley.

Barley and oats are the cereals whose cultivation extends farthest north in Europe.

The specific gravity of English barley varies from 1·25 to 1·33; of bigg from 1·227 to 1·265; the weight of the husk of barley is $\frac{1}{5}$, that of bigg $\frac{2}{5}$. Specific gravity of barley is 1·235, by Dr. Ure's trials. 1000 parts of barley flour contain, according to Einhof, 720 of starch, 56 sugar, 50 mucilage, 36·6 gluten, 12·3 vegetable albumen, 100 water, 2·5 phosphate of lime, 68 fibrous or ligneous matter.

From the examination instituted by the Royal Agricultural Society of England, and carried out under the directions of Messrs. Way and Ogston, the following results have been arrived at:—

Kind of Barley employed.	Moisture in 100 Parts of Grain.	Specific Gravity of Grains.	Ash in 100 Parts of dried Grain.
Unknown	12·00		2·43
Chevalier barley	10·00	1·260	2·50
Ditto	16·00	1·234	2·82
Ditto, from Moldavia	11·00	1·268	2·38
Ditto	16·00		2·75
Grains of Chevalier barley	15·00		14·23

The analyses of several varieties gave as the composition of the ashes of the grains of barley:—

	Unknown.	Chevalier Barley.	From Moldavia.	Chevalier Barley.
Potash	21·14	20·77	37·55	7·70
Soda		4·56	1·06	0·36
Lime	1·65	1·48	1·21	10·36
Magnesia	7·26	7·45	10·17	1·26
Sesquioxide of iron	2·13	0·51	1·02	1·46
Sulphuric acid	1·91	0·79	0·27	2·99
Silica	30·68	32·73	24·56	70·77
Phosphoric acid	28·53	31·89	28·64	1·99
Chloride of sodium	1·01		1·47	1·10

In the "Synopsis of the Vegetable Products of Scotland," by Peter Lawson and Son, will be found the best description of all the different varieties of barley; and, since the Lawsonian collection is in the museum of the Royal Botanic Gardens at Kew, the grains can be examined readily by all who take any interest in the subject. A few only of the varieties will be noticed.

The true six-rowed Barley, known also as Pomeranian and as six-rowed white winter barley.—This is a coarse barley, but hardy and prolific. It is occasionally sown in France, and also in this country, sometimes as a winter and sometimes as a spring barley, and is found to answer pretty well as either.

Naked two-rowed.—Ear long, containing twenty-eight or thirty very large grains, which separate from the palea, or chaff, in the manner of wheat. This variety has been introduced to the notice of agriculturalists at various times, and under different names, but its cultivation has never been carried to any great extent.

Common Bere, Bigg, or rough Barley.—This variety is chiefly cultivated in the Highlands of Scotland, and in the Lowlands on exposed inferior soils.

Victoria.—A superior variety of the old bigg, compared with which it produces longer straw, and is long-eared, often containing 70 or 100 grains in each. Instances have been known of its yielding 13 quarters per acre, and weighing as much as 96 lbs per bushel.

Beyond these there are, *the winter black; the winter white; old Scottish four-rowed; naked, golden*, or *Italian*; *Suffolk* or *Norfolk*, and *Short-necked*; cultivated in various districts, and with varying qualities. See BEER.

Digitized by Google

The Quantities of Barley sold in the English Markets.

Months.	1859.	1860.	1861.	1862.	1863.	1864.
	qrs.	qrs.	qrs.	qrs.	qrs.	qrs.
January - -	440,289	319,637	347,375	378,612	445,305	459,188
February - -	327,154	301,189	282,780	329,938	283,573	328,109
March - -	228,963	238,484	244,297	265,832	185,881	231,683
April - -	167,439	82,795	103,824	111,432	103,228	163,832
May - -	48,084	29,128	50,238	43,884	35,647	42,056
June - -	11,648	8,081	15,126	4,752	5,697	12,203
July - -	5,563	3,469	4,770	2,612	2,990	8,401
August - -	4,808	3,754	7,757	5,398	6,721	7,337
September -	53,978	18,118	83,415	28,441	81,936	50,755
October - -	285,047	97,046	290,320	181,022	425,507	355,763
November -	360,634	240,804	511,066	468,989	446,484	408,484
December -	476,720	444,551	451,904	461,018	464,691	531,405
The year - -	2,410,326	1,787,056	2,392,872	2,281,930	2,487,660	2,599,316

BARLEY, PEARL and POT. When barley is deprived of its husk by a mill, it forms the *Scotch*, *Hulled*, or *Pot Barley*. When all the integuments of the grains are removed, and the seeds are rounded and polished, they constitute *Pearl Barley*. The flour obtained by grinding pearl barley to powder is called *Patent Barley*.

Of English pearl barley in 1864 we exported 12,811 cwts.

BARLEY SUGAR. Sugar boiled until it is quite transparent and crisp: formerly in barley water. It is flavoured with either orange or lemon peel.

BARM. (Derived from the Saxon *beorme*; or from *beer-rahm*, beer-cream.) The yeasty top of fermenting beer. It is used as leaven in bread, and to establish fermentation in liquors. See BEER, FERMENTATION.

BARRÉGE. A woollen fabric, in both warp and woof, which takes its name from the district in which it was first manufactured—the especial locality being a little village named Arosons, in the beautiful valley of Barrèges. It was first employed as an ornament for the head, especially for sacred ceremonies, as baptism and marriage. Paris subsequently became celebrated for its barrèges, but these were generally woven with a warp of silk. Enormous quantities of cheap barrèges are now made with a warp of cotton.

BARREL. (*Baril*, Fr.) A round vessel, or cask, of greater length than breadth, made of staves, and hooped.

The English barrel—wine measure contains 31½ gallons.

„	(old) beer	„	36	„
„	(old) ale	„	32	„
„	beer vinegar	„	34	„
„	contains 126 Paris pints.			

The ale and beer barrels were equalised to 34 gallons by a statute of William and Mary. The wine gallon, by a statute of Anne, was declared to be 231 cubic inches; the beer gallon being usually reckoned as 282 cubic inches. The imperial gallon is 277·274 cubic inches. The old barrels now in use are as follows:—

Wine barrel - - - - -		$26\frac{1}{4}$	imperial gallons.
Ale „ (London) - - -		$33\frac{39}{59}$	„
Beer „ - - - - -		$36\frac{19}{59}$	„
Ale and beer, for England - -		$34\frac{34}{59}$	„

The *baril de Florence* is equivalent to 20 bottles.

The Connecticut barrel for liquors is 31½ gallons, each gallon to contain 231 cubic inches. The statute barrel of America must be from 28 to 31 gallons. The barrel of flour, New York, must contain either 195 lbs. or 228 lbs. nett weight. The barrel of beef or pork in New York and Connecticut is 200 lbs. A barrel of Essex butter is 106 lbs. A barrel of Suffolk butter is 256 lbs. A barrel of herrings should hold 1000 fish. A barrel of salmon should measure 42 gallons.

BAROMETER. This name signifies a *measurer of weight*—the column of mercury in the tube of the barometer being exactly balanced against the weight of a column of air of the same diameter, reaching from the surface of the earth to the extreme limits of the atmosphere. The length of this column of mercury is never more than thirty-one inches; below that point it may vary, according to conditions, through several inches. There have been many useful applications of the barometer, but the only one with which this dictionary has to deal appears to be the following:—

Digitized by Google

Barometer, Mackworth's Underground. — In the goafs, or old workings, of some mines hollows exist, in which explosive or noxious gases tend to accumulate in considerable quantity. When the barometer falls, these gases expand and approach or enter the working places of the mine, producing disastrous results to life or health. To enable the manager of a mine to foresee these contingencies, he has but to construct a small model of such a cavity, and let the expansion or contraction of the gas measure itself. In *fig.* 156 A, is a brass vessel, 12 inches long and 1¼ inches in diameter,

156

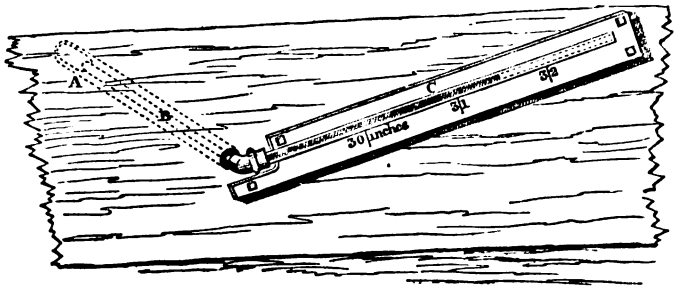

closed at each end. In one end is inserted a copper tube, ¼th inch in diameter and 12 feet long, B. A hole, 2 inches in diameter, being bored 12 feet deep into the solid coal or rock, the brass vessel is pushed to the bottom of it, and the small tube is closely packed round with coal or clay. C is a glass tube, 4 feet long and ¼th inch in diameter, in which is placed water or oil. As the external atmosphere presses, the surface of the liquid rises or falls, and the scale is graduated by comparison with a standard barometer. The air contained in the brass vessel A, and copper tube B, is unaffected, or nearly so, by temperature, and no correction has to be made for the latter as in the sympiesometer. A and B may be conveniently filled with nitrogen, to prevent the oxidation of the metal; and the surface of the liquid in the glass tube may be made self-registering, either giving maxima and minima, or, by the addition of clockwork, taking diagrams on paper.

BARWOOD. Although distinctions are made between sandal or saunders wood, camwood, and barwood, they appear to be very nearly allied to each other — at least, the colouring matter is of the same composition. They come, however, from different places. See CAMWOOD and SANDAL WOOD.

MM. Girardin and Preisser thus describe this wood: —

This wood, in the state of a coarse powder, is of a bright red colour, without any odour or smell. It imparts scarcely any colour to the saliva.

Cold water, in contact with this powder, only acquires a fawn tint after five days' maceration. 100 parts of water only dissolve 2·21 of substances consisting of 0·85 colouring matter and of 1·36 saline compounds. Boiling water becomes more strongly coloured of a reddish yellow; but, on cooling, it deposits a part of the colouring principle in the form of a red powder. 100 parts of water at 212° dissolve 8·86 of substances consisting of 7·24 colouring principle, and 1·62 salts, especially sulphates and chlorides. On macerating the powder in strong alcohol, the liquid almost immediately acquires a very dark vinous red colour. To remove the whole of the colour from fifteen grains of this powder, it was necessary to treat it several times with boiling alcohol. The alcoholic liquid contained 0·23 of colouring principle and 0·004 of salt. Barwood contains, therefore, 23 per cent of red colouring matter; whilst saunders wood, according to Pelletier, only contains 16·75.

The alcoholic solution behaves in the following manner towards re-agents: —

Distilled water added in great quantity -	Produces a considerable yellow opalescence. The precipitate is re dissolved by the fixed alkalis, and the liquor acquires a dark vinous colour.
Fixed alkalis - - - - -	Turn it dark crimson, or dark violet.
Lime water - - - - -	Ditto.
Sulphuric acid - - - - -	Darkens the colour to a cochineal red.
Sulphuretted hydrogen - - -	Acts like water.
Salt of tin - - - - -	Blood-red precipitate.
Chloride of tin - - - - -	Brick-red precipitate.

Digitized by Google

Acetate of lead	Dark violet gelatinous precipitate.
Salts of the protoxide of iron	Very abundant violet precipitates.
Copper salts	Violet-brown gelatinous precipitates.
Chloride of mercury	An abundant precipitate of a brick-red colour.
Nitrate of bismuth	Gives a light and brilliant crimson red.
Sulphate of zinc	Bright red flocculent precipitate.
Tartar emetic	An abundant precipitate of a dark cherry colour.
Neutral salts of potash	Act like pure water.
Water of barytes	Dark violet-brown precipitate.
Gelatine	Brownish-yellow ochrous precipitate.
Chlorine	Brings back the liquor to a light yellow, with a slight yellowish-brown precipitate, resembling hydrated peroxide of iron.

Pyroxylic spirit acts on barwood like alcohol, and the strongly coloured solution behaves similarly towards re-agents. Hydrated ether almost immediately acquires an orange-red tint, rather paler than that with alcohol. It dissoves 19·47 per cent. colouring principle. Ammonia, potash, and soda, in contact with powdered barwood, assume an extremely dark violet-red colour. These solutions, neutralised with hydrochloric acid, deposit the colouring matter in the form of a dark reddish-brown powder. Acetic acid becomes of a dark-red colour, as with saunders wood.

Barwood is but slightly soluble; but the difficulty arising from its slight solubility is, according to Mr. Napier, overcome by the following very ingenious arrangement: —The colouring matter while hot combines easily with the proto-compounds of tin, forming an insoluble rich red colour. The goods to be dyed are impregnated with proto-chloride of tin combined with sumach. The proper proportion of barwood for the colour wanted is put into a boiler with water, and brought to boil. The goods thus impregnated are put into this boiling water containing the rasped wood, and the small portion of colouring matter dissolved in the water is immediately taken up by the goods. The water, thus exhausted, dissolves a new portion of colouring matter, which is again taken up by the goods, and so on till the tin upon the cloth has become (if we may so term it) saturated. The colour is then at its brightest and richest phase.

Our importations of bar wood have been :—

	Tons.	Computed real value.		Tons.	Computed real value.
1863	2,660	£7,830	1864	3,013	£11,428

BARYTA, or BARYTES. (*Baryte*, Fr.) One of the simple earths. It may be obtained most easily by dissolving the native carbonate of barytes (*Witherite*, after Withering, who described it, "Phil. Transactions," 1784) in nitric acid, evaporating the neutral nitrate till crystals be formed, draining and then calcining these, by successive portions, in a covered platina crucible, at a bright red heat. A less pure baryta may be obtained by igniting strongly a mixture of the carbonate and charcoal, both in fine powder and moistened. It is a greyish-white earthy-looking substance, fusible only at the jet of the oxy-hydrogen blowpipe, has a sharp caustic taste, corrodes the tongue and all animal matter, is poisonous even in small quantities, has a very powerful alkaline reaction; a specific gravity of 4·0; becomes hot, and slakes violently when sprinkled with water, falling into a fine white powder, called the hydrate of baryta, which contains 10½ per cent. of water, and dissolves in 10 parts of boiling water. This solution lets fall abundant columnar crystals of hydrate of baryta as it cools; but it still retains one-twentieth its weight of baryta, and is called baryta water. The above crystals contain 61 per cent. of water, of which, by drying, they lose 50 parts. This hydrate may be fused at a red heat without losing any more water. Of all the bases, baryta has the strongest affinity for sulphuric acid, and is hence employed—either in the state of the above water, or in that of one of its neutral salts, as the nitrate of muriate—to detect the presence and determine the quantity of that acid present in any soluble compound. Its prime equivalent is 7·66, hydrogen being 1000.

BARYTA, CARBONATE OF. The composition of the native carbonate of barya may be regarded as baryta 77·59 and carbonic acid 22·41. It is found in Shropshire, Cumberland, Westmoreland, and Northumberland. The carbonate of baryta is employed in our colour manufactories as a base for some of the more delicate colours; it is also used in the manufacture of plate-glass; and, in France, it is much used in the preparation of beet-root sugar.

A small quantity only of carbonate of baryta is now produced in this country; in 1864 a few tons were sold from Alston Moor, and a little from Snailbeach, in Shropshire.

Digitized by Google

BARYTA, SULPHATE OF. The baryte of Brooke and Miller, barytes of Dana and Phillips, Bolognian spar, called also "cawk" and "heavy spar." It is composed of baryta 65·63, sulphuric acid 34·37, with sometimes a little iron, lime, or silica.

This salt of baryta is very extensively spread over various parts of the islands. It might be obtained in very large quantities in Devonshire, Cornwall, and other places, if the demand for it sufficiently increased the price so as to render the working of it profitable. It is worked in Derbyshire, Yorkshire, Shropshire, and the Isle of Arran. The white varieties are ground after being heated and thrown into water, and the heavy white powder is employed in adulterating white lead. On this account it is very difficult to obtain correct returns. The probable production of 1864 was :—

	Tons.
Derbyshire, about	4500
Shropshire „	1250
Bantry (Ireland)	500
Isle of Arran	650
Kirkcudbright	100

We exported of Barytes as follows :—

	1863		1864	
	cwt.	Declared real value.	cwt.	Declared real value
Sulphate of, English	50,075	£8,312	47,316	£6,735
do. Foreign	367	—	240	45

BARYTA NITRATE. This salt is used in pyrotechny for making *green fire*. The best mixture is nitrate of baryta 77 parts, sulphur 13 parts, chlorate of potash 5 parts, metallic arsenic 2 parts, charcoal 3 parts.

BASALT. One of the most common varieties of trap rock. It is a dark green or black stone, composed of augite and felspar, very compact in texture, and of considerable hardness, often found in regular pillars of three or more sides, called "basaltic columns." Remarkable examples of this kind are seen at the Giant's Causeway in Ireland, and at Fingal's Cave, in Staffa, one of the Hebrides. Messrs. Chance (brothers) of Birmingham, have adopted the process of melting the Rowley rag, a basaltic rock forming the plateau of the Rowley hills, near Dudley, South Staffordshire, and then casting it into moulds for architectural ornaments, tiles for pavements &c. Not only the Rowley rag, but basalt, greenstone, whinstone, or any similar mineral, may be used. The material is melted in a reverberatory furnace, and when in a sufficiently fluid state, is poured into moulds of sand encased in iron boxes, these moulds having been previously raised to a red heat in ovens suitable for the purpose. The object to be attained by heating the moulds previous to their reception of the liquid material is to retard the rate of cooling; as the result of slow cooling is a hard, strong, and stony substance, closely resembling the natural stone, while the result of rapid cooling is a dark brittle glass.

BASILICON. The name given by the old apothecaries to a mixture of oil, wax, and resin, which is represented by the *Cerat resinæ* of the present day.

BASKETS. Weaving of rods into baskets is one of the most ancient of the arts amongst men; and it is practised in almost every part of the globe, whether inhabited by civilised or savage races. Basket-making requires no description here.

We imported in 1864 Baskets of the computed real value given :—

From Hamburg	£6,395
France	31,671
Portugal	2,960
Other Parts	1,860
	42,886

BASSORA GUM. A gum obtained from the *Acacia leucophlæa*, brought from Bassora. It has a specific gravity of 1·3591, and is yellowish white in colour.

BASSORINE. A constituent part of gum Bassora, as also of gum tragacanth. It is semi-transparent, difficult to pulverise, swells considerably in cold or boiling water, and forms a thick mucilage without dissolving.

BASS or BAST. The Russian mats used by gardeners and upholsterers, made from the bark of the Lime or Linden tree, are called Bast mats. The name is also used for the bark or tough fibres of the flax and hemp plants of which Bast brooms are made. The thick mat or hassock used by persons to kneel on at church is called a Bass.

We imported of Bast or Bast Ropes as follows :—

	Cwts.	Computed real value.
1863	127	£254
1864	160	320

Digitized by Google

BATH METAL consists of 3 oz. of zinc to 1 lb. of copper. — See BRASS.

BATHS. (*Bains*, Fr.; *Baden*, Germ.) The importance attached by the Greeks and Romans to bathing is sufficiently attested by the remains of magnificent structures which still excite the admiration of the beholder, and by the beautiful specimens of fresco-painting and sculpture discovered in their baths.

It is computed that in the baths of Caracalla, as many as three thousand people could bathe at the same time, in water at various degrees of temperature, to suit their inclinations. The warm and hot baths were, however, almost exclusively in use under the Emperors.

During the Republic the baths were cold. Mecænas was the first to erect warm and hot ones for public use; they were called Thermæ, and were placed under the direction of ediles, who regulated the temperature, enforced cleanliness in the establishment, and order and decorum among the visitors. Agrippa, during the time he was edile, increased the number of thermæ to 170, and in the course of two centuries, there were no less than eight hundred in imperial Rome. The inhabitants resorted to the baths at particular hours, indicated by striking a bell or gong. Adrian forbade their being open before eight in the morning, except in cases of sickness; whereas Alexander Severus not only permitted them to be open during the whole day, but also to be used through the night in the great heats of summer.

It was a common practice with the Romans to bathe towards evening, and particularly before supper: some of the more luxurious made use of the bath even after this meal. We are told of many citizens of distinction who were in the habit of bathing four, or five, and even eight times a day. Bathing constituted a part of public rejoicings, equally with the other spectacles, and, like them, was prohibited when the country suffered under any calamity. All classes resorted to the baths; the emperors themselves, such as Titus, Adrian, and Alexander Severus, were occasionally seen among the bathers. The price of admission was very small, amounting to no more than a farthing. — *E. Lee, on Mineral Waters and Baths.*

Warm baths have come into very general use in England, and they are now considered as indispensably necessary in all modern houses of any magnitude, as also in club-houses, hotels, and hospitals; and the mode of constructing baths, and of obtaining the necessary supplies of hot and cold water, has undergone much improvement with the extension of their employment.

The several points in regard to warm baths are,

1. The materials of which they are constructed.
2. Their situation.
3. The supply of cold water.
4. The supply of hot water.
5. Minor comforts and conveniences.

1. As to the materials of which they are constructed. — Of these the best are slabs of polished marble, properly bedded with good water-tight cement, in a seasoned wooden case, and neatly and carefully united at their respective edges. These, when originally well constructed, form a durable, pleasant, and agreeable-looking bath, but the expense is often objectionable, and, in upper chambers, the weight may prove inconvenient. If of white or veined marble, they are also apt to get yellow or discoloured by frequent use, and cannot easily be cleansed; so that large Dutch tiles, as they are called, or square pieces of white earthenware, are sometimes substituted. Welsh slate has now superseded marble to a great extent; and very superior baths are now manufactured of Stourbridge clay, at Stourbridge. Copper, tinned or galvanised iron, are also employed; the first is most expensive in the outfit, but far more durable than the latter.

2. As to the situation of the bath, or the part of the house in which it is to be placed.—In hotels and club-houses, this is a question easily determined; several baths are usually here required, and each should have annexed to it a properly warmed dressing-room. Whether they are upstairs or downstairs is a question of convenience, but the basement story, in which they are sometimes placed, should always be avoided: there is a coldness and dampness belonging to it, in almost all weathers, which is neither agreeable nor salubrious.

In hospitals, there are usually several baths on each side of the house (the men's and women's), and the supply of hot water is ready at a moment's notice.

In private houses, the fittest places for warm baths are dressing-rooms annexed to the principal bed-rooms; or, where such convenience cannot be obtained, a separate bath-room connected with the dressing-room, and always upon the bed-room floor.

3. The supply of water is a very important point, as connected with the present subject. The water should be soft, clean, and pure; and as free as possible from all substances mechanically suspended in it.

Digitized by Google

4, and 5.—In public bathing establishments, where numerous and constant baths are required, the most effective means of obtaining hot water for their supply are now employed. It is drawn directly into the baths from a large boiler, placed somewhere above their level. The hot water enters the bath by a pipe at least an inch and a half in diameter, and the cold water by one of the same dimension. The relative proportions of the hot and cold water are, of course, to be adjusted by a thermometer; and every bath has a two-inch waste pipe, opening about two inches from the top of the bath, and suffering the excess of water freely to run off; so that when a person is immersed in the bath, or when the supplies of water are accidently left open, there may be no danger of an overflow.

A contrivance of some ingenuity consists in suffering the water for the supply of the bath to flow from a cistern above it, through a leaden pipe of about one inch diameter, which is conducted into the kitchen or other convenient place, where a large boiler for the supply of hot water is already fixed. The bath-pipe is immersed in this boiler, in which it makes many convolutions, and, again emerging, ascends to the bath. The operation is simply this:—the cold water passing through the convolutions of that part of the pipe which is immersed in the boiling water, receives there sufficient heat for the purpose required, and ascending, in obedience to the law of fluid pressure, it is delivered in that state by the ascending pipe into the bath, which is also supplied with cold water and waste-pipes as usual. The pipe may be of lead, as far as the descending and ascending parts are concerned, but the portion forming the worm or convolutions immersed in the boiler, should be copper, in order that the water within it may receive heat without impediment.

The facilities which are now afforded for the construction of baths in private houses, and for the use of them at a very cheap rate in public establishments, render it quite unnecessary to retain the remarks made by Dr. Ure.

Public baths and wash-houses have now become common amongst us, and with them an increased cleanliness is apparent, and improved health throughout the population.

The steady increase of the revenue derived from the baths and wash-houses in London, from the commencement of the undertaking in 1846, shows the practical utility of these institutions, and their effect on the physical and social condition of the industrious classes; viz.:—

	£	s.	d.
The aggregate receipts of nine establishments, during 1853, amount to	18,213	5	8
1852. Eight establishments	15.629	5	8
1851. Six establishments	12,906	12	5
1850. Four establishments	9,823	10	6
1849. Three establishments	6,379	17	2
1848. Two establishments	2,896	5	1
1847. 1846. Ditto	3,222	1	5

A similar increase has continued to the present time, the receipts being now, 1865, above £25,000. Those conveniences—now, indeed, become absolute necessities—are extending in every part of the country.

Baths, as curative agents, are of various kinds. Turkish Baths, for Rheumatism and other complaints:—in which are adopted all the processes which have been so much extolled in the Oriental bath system, have been introduced with success during the last four years. Although much lauded by some, they have not been so satisfactory to others; and do not therefore appear to be extending. Vapour Baths are stimulant and sudorific; they may be either to be breathed, or not to be breathed. Dr. Pereira has given the following Table, as a comparative view of the heating powers of vapour and of water:—

Kind of bath.	Water.	Vapour.	
		Not breathed.	Breathed.
Tepid bath	85° to 92°	96° to 106°	90° to 100°
Warm bath	92 „ 98	106 „ 120	100 „ 110
Hot bath	98 „ 106	120 „ 160	110 „ 130

Local vapour baths are applied in affections of the joints, and the like.

Vapour douche is a jet of aqueous vapour directed on some part of the body.

Medicated vapour baths are prepared by impregnating vapour with the odours of medicinal plants.

Digitized by Google

Sulphur, chlorine, sulphurous acid, iodine and camphor, are occasionally employed in conjunction with aqueous vapour.

Warm, *tepid*, and *hot baths* are sufficiently described above.

BATH BRICK. A brick made of calcareous and siliceous earth used in cleaning knives and for polishing purposes. They are made very extensively at and near Bridgewater from a deposit found in the Estuary there; a similar deposit is also worked at Cumwick, at the entrance of the Parrot River, and at Highbridge. At Bridgewater the average make is about 3,000,000 scouring bricks annually, which sell at about 2*l*. per thousand.

BATH METAL. An alloy in nearly equal quantities of copper and zinc.

BATH STONE. A building stone raised in the vicinity of the city of Bath. See OOLITE.

BAUXITE. A mineral which was at one time regarded as an ore of iron. It is so called from the name of the locality in France where it is found. Its composition is

Silica	2·8
Oxide of Titanium	3·1
Sesquioxide of Iron	25·5
Alumina	57·4
Carbonate of Lime	0·4
Water	10·8

It is now used as the source from which to obtain aluminium in the greatest purity. See ALUMINIUM.

BATHVILLITE. Dr. C. Greville Williams, who has been largely employed in the distillation of bituminous minerals, and amongst others of the *Torbanite* from Torbane Hill, near Bathgate, in Scotland, has discovered a brown friable substance occasionally filling the hollows of the above mineral. This is inflammable, and has been named *Bathvillite* by its discoverer.

BATT. A name given to a highly bituminous shale, which is often found interstratified with the coal. It occurs in the South Staffordshire coal field, and has been well described by Jukes in his *Geology of the South Staffordshire Coal Fields*. In Lancashire this shale is called *Black Bass*, and in Flintshire, where they are distilling it in considerable quantities, it is known as *Black Slag*.

BAULK. A piece of timber—the whole trunk of a tree. The term is applied by London timber merchants to wood in lengths of from 20 to 25 feet and 10 inches square.

BAY SALT. The larger crystalline salt of commerce. See SALT.

BAY, THE SWEET. (*Laurus nobilis*.) Bay leaves have a bitter aromatic taste, and an aromatic odour, which leads to their use in cookery.

BAYS, OIL OF. This oil is imported in barrels from Trieste. It is obtained from the fresh and ripe berries of the bay tree by bruising them in a mortar, boiling them for three hours in water, and then pressing them. When cold, the expressed oil is found floating on the top of the decoction. Its principal use is in the preparation of veterinary embrocations.

BDELLIUM. Two gum resins pass in commerce by this name. One is the false myrrh (the *Bdellium* of Scripture), the produce of the *Amyris commiphora*. The other is the *African Bdellium*, obtained from *Heudolatia Africana*. Pelletier gives the composition of the African bdellium as — resin, 59·0; soluble gum, 9·2; bassorin, 30·6; volatile oil and loss, 1·2.

BEADS. (*Grain*, Fr.; *Bethe*, Germ.) Perforated balls of glass, porcelain, or gems, strung and worn for ornaments; or, amongst some of the uncivilised races, employed instead of money.

The use of beads is of the highest antiquity. They are found in the tombs of Thebes and in the ruined temples of Assyria. They are discovered buried with the mighty dead of Greece. The Roman lady had them placed with her in her grave; and even in the burial-places of the ancient Britons we find beads, and these, too, of a similar pattern to such as we have every reason to believe are as old as Moses. Indeed, the peculiar ornamented zigzag pattern of the most ancient beads has been always, and still is manufactured at Venice, and found over the entire continent of Africa.

Glass beads have long been made in very large quantities in the glass-houses of Murano, at Venice.

Glass tubes, previously ornamented by colour and reticulation, are drawn out in proper sizes, from 100 to 200 feet in length, and of all possible colours. Not less than 200 shades are manufactured at Venice. These tubes are cut into lengths of

Digitized by Google

about two feet, and then, with a knife, they are cut into fragments, having about the same length as their diameter. The edges of these beads are, of course, sharp; and they are subjected to a process for removing this. Sand and wood-ashes are stirred with the beads, so that the perforations may be filled by the sand; this prevents the pieces of glass from adhering in the subsequent process, which consists in putting them into a revolving cylinder and heating them. The finished beads are sifted, sorted in various sizes, and strung by women for the market.

In the Jurors' Report of the Great Exhibition of 1851 are the following remarks on this manufacture: —

"The old Venetian manufactures of glass and glass wares fully sustain their importance; and those of paper, jewellery, wax-lights, velvets, and laces, rather exceeded their ordinary production. The one article of beads employs upwards of 5000 people at the principal fabric on the island of Murano; and the annual value is at least £200,000. They are exported to London, Marseilles, Hamburg, and thence to Africa and Asia, and the great Eastern Archipelago."

The *perles à la lune* are a finer, and, consequently, more expensive bead, which are prepared by twisting a small rod of glass, softened by a blowpipe, about an iron wire.

The preparation and cutting of gems into beads belong especially to the lapidary. The production of beads of PASTE, and of artificial PEARLS, will be noticed under those heads respectively.

In India beads of rock crystal are often very beautifully cut.

We *imported*, in 1864:—

	lbs.	Computed real value. £
Beads of glass (including Bugles):—		
From Hamburg	157,703	13,141
„ Bremen	43,908	3,658
„ Holland	34,771	2,899
„ Austrian Territories, chiefly Venice	2,875,634	143,782
„ Other parts	15,595	1,142
	3,127,611	164,622
	lbs.	£
Beads of Coral	3,000	31,798
Ditto Unenumerated	13,225	4,172

BEAM TREE. (*Pyrus Aria*). The wood is used for axle trees, naves of wheels, and the cogs of machinery.

BEAN. (Faba.) See LEGUMINOSÆ.

BEAN ORE. Brown iron ore occurring in ellipsoidal concretions, called also BOHNERZ.

BEARINGS. The parts of a machine upon which the moveable portions are supported. Upon the correct adaptation of the rubbing surfaces to each other depends the value of a machine. If, for example, there should be much friction between the axle of a railway carriage and its *bearings*, there would be a large amount of power lost in overcoming that friction. The mechanical force—motion retarded—would (according to the received views of the present day—somewhat too hastily adopted) be converted into *heat*.

It has, therefore, been the study of engineers to produce bearings which should offer great resistance to pressure, and from their smoothings produce as little friction as possible.

KINGSTON'S METAL—*which see*,—has been lately used in the large engines for our iron clad fleet. Some of the railway companies are using an alloy of equal parts of tin and copper. Gun metal is, however, commonly employed for the bearings of machines. See BRONZE; COPPER; UNGUENTS.

BEAVER, THE. (*Castor Fiber.*) This animal is captured for its skin, and for the castor (*castoreum*), which is employed medicinally. See FURS.

BEBIRINE, or BEBEERINE. ($C^{36}H^{21}NO^4$.) An alkali discovered by Dr. Rodie, of Demerara, in the bark of the bebeern tree. It was examined more minutely by Madagan and Tilley, and still more recently by Von Planta, who has determined its true formula. It is very bitter, and highly febrifuge.

BEECH. (*Hêtre commun*, Fr.; *Gemeine Buche*, Germ.) The beech tree (the *Fagus silvatica* of Linnæus) is one of the most magnificent of the English trees, attaining, in about sixty or seventy years, in favourable situations, a height of from 70 to 100 feet, and its trunk a diameter of five feet. The wood, when green, is the hardest of British timbers, and its durability is increased by steeping in water; it is chiefly used by cabinet makers, coopers, coach builders, and turners.

Digitized by Google

BEECH NUT OIL. A mild oil obtained by pressure from the beech nuts. It is used in cooking, and substituted for olive oil.

BEER. (*Bière*, Fr.; *Bier*, Germ.) The fermented infusion of malted barley, flavoured with hops, constitutes the best species of beer; known also as ale, bitter ale, porter, or brown stout, according to its varied flavour, colour, and strength. But there are many beverages of inferior quality to which the name of beer is given, such as spruce beer, ginger beer, &c., all of which consist of a saccharine liquor partially advanced into the vinous fermentation, and flavoured with peculiar substances.

The ancients were acquainted with beer, and the Romans gave it the appropriate name of Cerevisia (*quasi Ceresia*), as being the product of corn, the gift of Ceres. The most celebrated liquor of this kind in the old time was the Pelusian potation, so called from the town where it was prepared, at the mouth of the Nile. Aristotle speaks of the intoxication caused by beer, and Theophrastus justly denominated it the wine of barley. We may indeed infer, from the notices found in historians, that drinks analogous to beer were in use among the ancient Gauls, Germans, and, in fact, almost every people of our temperate zone; and they are still the universal beverage in every land where the vine is not an object of rustic husbandry.

The manufacture of beer may be conveniently considered under three heads.

1. An examination of the natural productions which enter into its composition: barley and hops.

2. The preparation which one of those materials, barley, must undergo in the process of malting.

3. The formation of a saccharine liquor, or wort, and imparting to it the peculiar flavour and properties of the hop, with the fermentation, fining, ripening, and preservation of the beer.

1. The Materials.

1. Barley (*Hordeum*).—Barley, wheat, maize, and several other kinds of grain, are capable of undergoing those changes which develope the saccharine principle from which beer can be made; but the first-named is by far the most fit, and in this country is almost exclusively used. There are two species of barley, the *Hordeum vulgare*, or common barley, having its corns arranged in two rows on its spikes; and the *Hordeum hexastichon*, in which three seeds spring from one point, so that its double row has apparently six corns. The former is the proper barley, and is much the larger sized grain. The latter is little known in England, but is much cultivated in Scotland under the name of bere, or big, being a hardy plant, adapted to a colder climate. Big is a less compact grain than barley; the weight of an imperial bushel (2218·192 ins.) of the former being only about 48 lbs., while that of the latter will be from 52 to 56 lbs. Their constituents are, however, very similar.

The quality of barley is much influenced by the soil on which it is grown; the best being from a light calcareous soil, or that known by farmers as good turnip land; and crops of excellent quality are also grown on a rich loam. Much also depends on the seed, the climate, and the care of the husbandman in the harvesting, stacking, and thrashing at the proper season. The barley should have a thin, bright, clean, wrinkled husk, closely adhering to a plump well-fed kernel, which, when broken, appears white and chalky, with a full uninjured germ of a pale yellow colour.

If it breaks hard and flinty, it should be avoided; and although not in a proper condition for malting until it has sweated or seasoned in the stack or mow, care must be taken that it has not heated so as to destroy the vitality of the germ. Mixed or uneven samples should also be avoided, as it is important that all should grow simultaneously or evenly on the floors.

By chemical analysis, 100 parts of barley-meal appear to consist of:—

Gluten	3·76	Albumen	2·23
Starch	72·00	Phosphate of lime	0·25
Sugar	5·60	Water	10·00
Gum	5·00	Loss	1·16

Another analysis gives—

Gluten	3.52	Phosphates	0.24
Hordeum, or starch and gluten intimately combined	67·18	Oil	0·30
		Vegetable fibre	7·29
Sugar	5·21	Water	9 37
Gum	4·62	Loss	1·12
Albumen	1·15		

Digitized by Google

Hermstadt gives the mean of several analyses of barley to be:—

Gluten	4·92	Oils	0·35
Starch	60·50	Phosphates	0·36
Sugar	4·66	Husk	11·56
Gum	4·51	Water	10.48
Albumen	0·35	Loss	2·31

Proust thought he had discovered in barley a peculiar principle, to which he gave the name of Hordeine, which he separated from the starch by the action of both cold and boiling water. He found that, by treating barley-meal successively with water, he obtained from 89 to 90 parts of a farinaceous substance, composed of from 32 to 33 of starch, and from 57 to 58 of hordein; his analysis also gives, gluten, 3·0; sugar, 5·0; gum, 4·0; and resinous extract, 1·0.

Dr. T. Thomson gives no hordeine, but the starch as 88 per cent., sugar 4.

Einhof gives the constituents of barley as 70·05 flour, 18·75 husk, and 11·20 water.

The hordeine of Proust is a yellowish powder, contains no azote, and is, therefore, dissimilar to gluten. In the process of malting the proportion of hordeine is greatly diminished by its conversion into starch and sugar, so that many chemists view hordeine as only an allotropic condition of starch: but the subject will evidently bear yet more extended and careful research.

2. Hops (*Humulus lupulus*).—The female flowers, or catkins, of a dicœcious plant belonging to the natural order Urticaceæ; which grows wild in many English hedgerows, but requires the most careful cultivation to produce the highly odoriferous and cordial properties so valued by the brewer. The plant springs up annually from the old roots in April, flowers the latter end of June, and ripens towards the end of August and in September, when they are gathered, dried, and packed very tightly in pockets, or bags, for preservation and use. Hops are grown to the greatest extent in the counties of Kent and Sussex; but a strong hop is also grown in the north clay district of the county of Nottingham, and a very grateful mild hop in the Worcestershire district.

The flavour of the Golding, or Farnham hop, a district in Surrey, is rich, and in high estimation; but the plant is one of the most tender cultivated, the flower small, but heavy with the farina, and the crop very uncertain.

The Canterbury grape-hop is much cultivated in the districts of Kent and Sussex, and deservedly esteemed as a good useful hop.

The Flemish plant produces a large flower, but of light weight and of inferior flavour; it is considered a hardy kind, and very productive.

Hops require a rich soil, well manured and cleaned, a sunny aspect, and to be sheltered from the east winds, which not only check the growth of the plants, but cause them to be infested with vermin, which are sometimes so numerous as to destroy nearly the entire crop. The flower, during the ripening season, is also sometimes attacked by the red or blue mould, which often consumes a considerable portion of the farina, and may be discovered by the strig of the flower being bare of leaf.

The catkins or strobils of the hop consist of the scales, or large and persistent bracts, which, in the early period of their growth, are of a light green colour (afterwards changing to a pale yellow), at the bottom of which are small, round seeds, that, when ripe, have a hard shell of a brown or reddish colour. They are imbedded in the farina, or yellow powder, which is the most valuable part of the hop.

No hop should be gathered till the seed is matured; not for the sake of the seed itself, but the nectarium, or farina, will be in larger particles, and its essential aromatic and bitter qualities more perfectly developed when ripe. Good hops, when rubbed in the hand, leave an oily, or resinous, and rather clammy feeling, with a pungent and gratifying odour; the scales should also be even in colour, and without any green specks, or any appearance of mould on the strig, or small stem of the flower.

The drying of the hop is an important part of its management, and requires great care; it is performed in kilns, in Sussex, termed oast-houses. The heat should be moderate and regular, in no case exceeding 120° F., as to over-dry them would injure the flavour, and if not sufficiently dry they are liable to become mouldy. The general practice is to try the strig or stalk of the flower, which if it snaps from brittleness is sufficiently dried, but if it bends without breaking more drying is necessary.

The packing has also much influence in the preservation of the valuable but volatile aroma. The finer flavoured and pale hops are well rammed into sacks of fine canvas, called pockets, which weigh about 1½cwt. each; the stronger and dark-coloured hops into sacks of a coarser texture, called hop bags, and weigh from 2½ cwts. to 3 cwts. each.

Digitized by Google

If intended for export, the bags are sometimes subjected to the action of the hydraulic press; and if not required for immediate use, the simple screw press may be used with great advantage.

Dr. Ives first directed attention to the yellow pulverulent substance that has been alluded to as the farina, or pollen, and is technically known as the "condition" of the hop, which in good samples will amount to one-sixth of their weight. This powder bears some resemblance to lycopodium; and its analysis by Dr. Ives gives, tannin, 4·16; extractive, 8·33; bitter principle, 9·16; wax, 10·00; resin, 30·00; lignin, 38·33; and loss, 0·02. About 65 per cent. of the farina is soluble in alcohol, and the solution, distilled with water, leaves a resin amounting to 52·5 per cent., which has no bitter taste, and is soluble in alcohol or ether. The distillate from which the resin has thus been separated contains the bitter principle, which has been called "lupuline" (by Payen and Chevallier), mixed with a little tannin and malic acid.

To obtain this in a state of purity, the free acid must be saturated with lime, the solution evaporated to dryness, and the residuum treated with ether, which removes a little resin; after which the lupuline is dissolved out by alcohol, leaving the malate of lime. On evaporating the alcohol, the lupuline remains, weighing from 8·3 to 12·5 per cent. It is sometimes white, or slightly yellowish, and opaque, sometimes orange-yellow and transparent.

At ordinary temperatures it is inodorous, but when heated emits the peculiar smell and possesses the characteristic taste and bitterness of the hop. Water dissolves it in the proportion of about 1 part to 20, or 5 per cent., and acquires a yellow colour. It is quite soluble in alcohol and slightly so in ether.

Lupuline is neither acid nor alkaline, nor is it acted upon by solutions of the metallic salts; it contains apparently no azote, but only an empyreumatic oil.

The analysis of Payen and Chevallier gives the following:—Volatile oil, 2·00; lupuline, 10·30; resin, 55·00; lignin, 32·00; loss, 0·70. There are also traces of fatty, astringent, and gummy matters, malic and carbonic acids, and various salts.

The volatile oil was procured by Dr. Wagner by distilling fresh hops with water. It constituted about 8 per cent. of the air-dried flowers, it possessed a clear brownish-yellow colour, had an acrid taste and a strong odour of the hop. Its specific gravity is about 0·910; it is partially soluble in water, but more so in alcohol and ether, and becomes resinified by keeping. The tannin of the hop is also important in brewing, as it serves to precipitate the nitrogenised or albuminous matter of the barley, and assist the clearing of the liquor. Ives thought the scales of the hop, when freed from the yellow powder, contained no principles analogous to it; but it is almost impossible to free them entirely from the lupulinic grains; and Payen and Chevallier found the same principles in the different parts of the hop, but in different proportions.

2. The Preparation of the Barley by the Process of Malting.

In this process (for the conduct of which we refer to the article Malting) the raw grain is steeped in cisterns of water until it has imbibed sufficient to cause it to germinate; it is then spread on the floor of the malt-house, and frequently turned, until the germination has advanced to the stage when the plumula is about to make its appearance, and its further germination is stopped by being rapidly dried on the malt-kiln.

During germination a remarkable change has taken place in the substance of the grain. The glutinous constituent has almost entirely disappeared, and is supposed to have passed into the matter of the radicles, or roots, which during the process will have grown rapidly to nearly one and a half the length of the grain, while a portion of the starch is converted into sugar and mucilage.

The change is similar to that which starch undergoes when dissolved in water and digested in a heat of about 160° F. along with a little gluten. The thick paste becomes gradually liquid, transparent and sweet tasted, and the solution contains now sugar and gum, with some unaltered starch. The gluten suffers a change at the same time, and becomes acescent, so that only a certain quantity of starch can thus be converted by a quantity of gluten.

By the artificial growth upon the malt-floor all the gluten and albumen present in barley are not decomposed, and only about one-half of the starch is converted into sugar, as a continuance of the germination would exhaust the grain, and the valuable products would be taken up by the growth of the roots and stems of the plant. It is, therefore, the chief art of the maltster to regulate the germination and stop it at the point when the utmost conversion is attained with the least loss. This is generally considered to be done when the plumula, technically known as the acrospire, has advanced two-thirds the entire length of the grain, starting from the germ and proceeding under the skin toward the other end of the grain, beyond which it must never be suffered to protrude; the conversion of the hordeine into starch and sugar keeping

Digitized by Google

pace with the growth of the acrospire, and being thus prepared for its nearly complete conversion in the subsequent operations of the brewer.

Malt is generally distinguished by its colour — as pale, amber, brown, or black malt —arising from the different degrees of heat and management in the process of drying. The first is produced when the highest heat to which it has been subjected is from 90° to 100° F., the amber-coloured when the heat has been raised to 120° or 125°, and the brown at a heat of from 150° to 170°. The black malt, commonly called patent malt, is prepared by roasting in cylinders, like coffee, at a heat of from 360° to 400°, and is the only legal colouring matter that may be used in the brewing of porter.

The action of the kiln in drying is not confined to the mere expulsion of the moisture from the germinated seeds, but it serves to convert into sugar a portion of the starch which remained unchanged, not only by the action of the gluten upon the fecula at an elevated temperature, but also by the species of roasting which the starch undergoes, which renders it of a gummy nature. We have a proof of this, if we dry one portion of the malt in a naturally dry atmosphere, and another portion in a moderately warm kiln; we shall find the former yield a less saccharine extract than the latter. Moreover, kiln-dried malt has a peculiar, agreeable, and faintly-burned taste, probably from a small portion of empyreumatic oil formed in the husk, which not only imparts its flavour to the beer, but also contributes to its preservation.

As the quality of the malt depends much on that of the barley, so its skilful preparation has the greatest influence both on the quantity and quality of the worts made from it. If the germination has been imperfect or irregular, a portion of the malt will be raw, and too much of its substance remain unchanged and flinty; if it has been pushed too far, a part of the extractible matter is wasted.

If not thoroughly dried, the malt will not keep, but becomes soft and liable to mildew; and if too highly kiln-dried, a portion of its sugar will be caramelised and become bitter.

Good malt possesses the following characteristics: — The grain is round and full, breaks freely between the teeth, and has a sweetish taste, an agreeable smell, and is full of a soft flour from end to end. It affords no unpleasant flavour on being chewed; is not hard, so that when drawn along an oaken board across the fibres it leaves a white streak like chalk. It swims upon water, while unmalted barley sinks in it.

The bulk of good malt exceeds that of the barley from which it is made by from 5 to 8 per cent., but at the same time it becomes lighter in weight, 100 lbs. of good barley, judiciously malted, weighing, after being dried and screened, no more than about 80 lbs., the loss being about 12 per cent. of water, 5 per cent. waste, and about 3 per cent. by the growth of the roots, which, in drying, have been rendered brittle, and are removed by passing the malt over a wire screen.

The change which the barley has undergone by malting will be readily seen in the following comparative analysis by Proust: —

	Barley.	Malt.
Gluten	3	1
Hordein	55	12
Starch	32	56
Sugar	5	15
Mucilage	4	15
Resin	1	1
	100	100

We thus see the amount of the convertible starch and sugar has been nearly doubled at the expense of the hordein, a portion of which has also passed into the condition of mucilage, or a soluble gum, while the gluten is much diminished.

The researches of Payen and Persoz show there is also a new proximate principle formed during the malting, which may be considered as a residuum of the gluten, or vegetable albumen, in the germinating grain.

If we moisten the malt flour for a few minutes with cold water, press it out strongly, filter the solution, and heat the clear liquid in a water-bath to the temperature of 158°, the greater part of the albuminous azotised substance will be coagulated, and should be separated by a fresh filtration; after which the clear liquid is to be treated with alcohol, when a flocky precipitate appears, to which has been given the name of diastase. To purify it still further, especially from the azotised matter, we should dissolve it in water, and precipitate again with alcohol. When dried at a low temperature it appears as a solid white substance, which contains no azote, is insoluble in alcohol, but dissolves in water and proof spirit. Its solution is neutral and tasteless; it changes with greater or less rapidity according to the temperature, and becomes

Digitized by Google

sour at a temperature from 149° to 167°. It has the property of converting starch into gum, or dextrine (so called by the French chemists, from its polarising light to the right hand, whereas common gum does it to the left) and sugar; and, indeed, when sufficiently pure, the diastase operates with such energy that one part of it disposes 2000 parts of dry starch to that change, but it operates the quicker the greater its quantity.

Whenever the solution of diastase with starch is heated to the boiling point, it loses the converting property.

One hundred parts of the starch solution from good malt appear to contain about one part of this substance, which is of the greatest importance in effecting the further changes which take place in the process of brewing.

3. The Formation of a Saccharine Liquid, or Wort,

from the malt and hops, and production of the finished beer, is the province of the brewer; and the process will be found at length under the article Brewing.

The peculiar properties contained in wort do not exist ready formed in malt, but are the result of the joint action of water and heat which is employed in the initiatory process of the brewer on that substance, and is termed the mashing.

The Mashing.—This operation requires the greatest care, as on it, almost as much as on the malt employed, depends the character of the liquor.

Payen and Persoz, already alluded to, show that the mucilage formed by the reaction of malt upon starch may be either converted into sugar or be made into a permanent gum, according to the temperature of the water in which the materials are digested. We take of pale barley malt, ground fine, from 6 to 10 parts, and 100 parts of starch; we heat, by means of a water-bath, 400 parts of water in a copper to about 80° F.; we then stir in the malt, and increase the heat to 140° F., when we add the starch, and stir well together. We next raise the temperature to 158°, and endeavour to maintain it constantly at that point, or, at least, to keep it within the limits of 167° on the one side and 158° on the other. At the end of twenty or thirty minutes the original milky and pasty solution becomes thinner, and soon after as fluid nearly as water. This is the moment when the starch is converted into gum or dextrine. If this merely mucilaginous solution, which seems to be a solution of gum with a little liquid starch and sugar, be suitably evaporated, it may serve for various purposes in the arts to which gum is applied; but, with this view, it must be quickly raised to the boiling point, to prevent further change. If we wish, on the contrary, to produce a saccharine fluid, such as the wort for beer, we must maintain the temperature at between 158° and 167° for three or four hours, when the greatest part of the starch will have passed into sugar, and by evaporation of the liquid at the same temperature, a starch syrup may be obtained like that procured by the action of sulphuric acid upon starch.

In the operation of mashing, the finished and mellowed malt, having been well cleansed from all extraneous matters by screening, is coarsely ground, or better if only crushed between iron rollers, as is now generally practised. It is then gradually mixed with water in the mash-tun, at the proper heat, and intimately blended by stirring with the mashing-rakes, so that it may be uniformly moistened and no lumps remain. After being allowed some time to stand and settle, the liquor is drawn off, and more water at a higher temperature is added, again intimately blended with the malt,—now termed the goods,—again allowed to rest, and drawn off; the operation being repeated until the complete exhaustion of the saccharine and amylaceous substances of the malt is effected.

We can now see, from Payen and Persoz's experiment just given, the temperature at which the liquor ought to be maintained in this operation; namely, the range between 158° and 167°; and it has been ascertained, as a principle in mashing, that the best and soundest extract of the malt is to be obtained, first, by beginning to work with water at the lowest of these heats, and to conclude with water at the highest; secondly, not to operate the extraction at once with the whole of the water that is to be employed, but with separate portions and by degrees.

The first portion has the task of penetrating equally the crushed malt, extracting the more soluble ingredients and subjecting the dissolved starch to the action of the diastase and free sugar; the second and further portions are for the purpose of converting the remaining starch and completing the extraction of all the available products. By this means also the starch is not allowed to run into a cohesive paste, or, as it is termed, "lock up the goods," and the extract is more easily drained from the mass, and comes off a nearly limpid wort. The thicker, moreover, or the less diluted the mash is, so much the easier is the wort fined in the boiler or copper by the coagulation of the albuminous matter. These principles indicate the true mode of conducting the mashing process, but different kinds of malt require a different treatment; pale and

Digitized by Google

slightly kilned malt requires a somewhat lower heat than malt highly kilned, because the former is more ready to become pasty, and, for the same reason, needs a more leisurely infusion than the latter; and this is still more applicable to the case of a mixture of raw grain with malt, for it requires still gentler heats and more cautious treatment.

It is quite practicable to obtain from 1 part of malt and 8 parts of barley, a wort precisely similar to that procured from 9 parts of pure malt alone. But, of course, this could not be done without modifying considerably the process of mashing; and it happens, unfortunately, that the practice of the present day, amongst brewers, is to maintain, as closely as possible, one uniform system of mashing, whatever may be the nature or quality of the malt employed. Thus a difference in the malt is made to produce a difference in the wort, and all the energy and skill of the practical brewer are sometimes insufficient to compensate for the alterations which this difference induces in the subsequent working of the beer. With a regular and certain composition, as to the constituents of his wort, the operations of the brewer would assume a fixed and definite character, which, at present, they are very far indeed from possessing; and by which he not unfrequently suffers the most severe pecuniary loss and mental anxiety. With the exception of a trifling quantity of vegetable albumen, the only solid ingredients of beer-wort are dextrine and sugar; the latter of which ferments with great ease and rapidity, whilst the dextrine, though capable of fermentation, enters into the process only with difficulty, and requires, for its successful termination, not only much more yeast, but also a much higher temperature in the fermenting vat. At the same time, it is this very sluggishness in the fermentative quality of dextrine which is essential to the production of good beer; for, with sugar alone, the fermentation cannot be checked at ordinary temperatures, until the full measure of its decomposition has taken place, and it has become either a vapid admixture of alcohol and water, or, by the absorption of oxygen, is resolved into vinegar. It is indeed a notorious fact, that beer made with sugar will not keep so well as that made from malt; though, for rapid consumption, the use of sugar is, under some circumstances, to be commended, more especially on the small scale and in cold weather. The peculiarity of dextrine is, however, as we have stated, to undergo fermentation only with difficulty and by slow degrees; hence its decomposition spreads over a long space of time, and, in very cold weather, amounts to nothing; so that for months, or even years, after all the sugar of the wort has been destroyed, the evolution of carbonic acid gas from the still fermenting dextrine, keeps up a briskness and vitality in the beer; and, by excluding oxygen, all chance of acidification is shut off. A perfect beer-wort should therefore have reference to the period of its consumption: if this be speedy and pressing, the proportion of sugar ought to be large; if remote, the dextrine should greatly predominate. Under the first condition, the attenuation would proceed quickly, and, provided the temperature of the fermenting vat was not allowed to exceed 78°, the beer would soon cleanse and become ripe and bright; under the second, the attenuation in the vat would be slow and trifling, and require, perhaps, several years for its completion in the cask. Nevertheless, if the attenuation in the vat had gone on to the complete destruction of all the sugar, this kind of beer would prove in the end both the better and more healthy beverage of the two; for by the mode of its formation the presence of œnanthic ether or fusel oil is avoided. The importance therefore of placing in the hands of the brewer a means of determining the relative amounts of sugar and dextrine in his wort is sufficiently obvious. Now, this may be done in two ways; either by ascertaining, in wort of a determinate strength, the proportion of the one or the other of these substances. The dextrine is easier of calculation than the sugar, in a rough or approximate way; but the sugar can be determined with much more minute accuracy than the dextrine. Yet, in practice, the former plan is preferable, from its simplicity, as we shall proceed to show. If, to a certain volume of strong wort (say of 30 lbs. per barrel), we add an equal amount of alcohol or spirits of wine, the whole of the dextrine will precipitate as a dense coagulum; and by examining the bulk of this deposit in the tube, its weight may be inferred pretty nearly if the tube has been previously graduated, so as to indicate, from actual experiment, the weight of the different measures of the coagulated dextrine. With weaker wort, more alcohol must be used, and with a denser wort, less alcohol, — the relations of which to each other may easily be kept recorded on a small card or scale affixed to the tube. This instrument is very easy of application, and has been found extremely useful to more than one practical brewer of the present day; and the accompanying record of brewing operations has reference to this mode of analysing wort. The determination of sugar in wort is best effected by boiling 100 grains of it with about half a pint of the following solution, and collecting and weighing the red-coloured precipitate which ensues, — every three grains of which indicate one grain of grape-sugar in the wort.

Digitized by Google

Grape-sugar Test Solution.

Sulphate of copper in crystals	100 grains.
Bitartrate of potash	200 „
Carbonate of soda in crystals	800 „
Boiling water, one pint, or	8750 „

First dissolve the sulphate of copper, then the bitartrate of potash, after which add the carbonate of soda, and filter if necessary. This solution is not affected when boiled with cane-sugar, dextrine, gum, or starch.

We have retained from Dr. Ure's original article the result of two brewings, taken from one mash at two different periods, and analysed to determine their relative contents of dextrine and sugar, according to the tube or alcohol process:—March 28th, 1851, proceeded to mash for experimental brewings; weather clear and open; thermometer outside at 51°,—in fermenting room 58°; difference between wet and dry bulb, 5·750°; barometer, 39·4 inches. Composition of the malt:—Moisture, 6·1; insoluble matter, 27; extract, 66·9. Quantity of malt employed, 70 bushels; of water at 180° F., 700 gallons; made the mixture with a common mashing-oar, and finished in 15 minutes. One hour afterwards, drew off 200 gallons of wort; and three hours from commencing to mash, drew off 200 gallons more,—continuing the mash for table-beer wort. The first-drawn wort contained 7·5 parts of dextrine to 1 of sugar; the second, 6·3 parts of dextrine, 2·2 of sugar;—their densities were, respectively, 30 and 36·5 lbs. per barrel. They were each boiled separately, with relative amount of hop,—the first having 30 and the second 36½ lbs. added; and the boiling in each case was kept up for three hours. At the end of this time both were cooled and diluted with water to a gravity of 27½ lbs. per barrel, and 250 gallons of each let down into separate fermenting-vats placed side by side; after which, they both received three quarts of good yeast,—the temperature being at 68° F. Two hours afterwards, the following observations commenced:—No. 1 being the wort containing 7·5 parts of dextrine to 1 of sugar, and No. 2 the wort having 6·3 of dextrine to 2·2 of sugar.

1851.	No. 1.	Temp.
March 28, 5 P.M.	No action	67·5°
„ „ 10 P.M.	Light thin cream	67·5
„ 29, 9 A.M.	White head	70·0
„ „ 6 P.M.	Fine white head	71·0
„ 30, 9 A.M.	Thick tough head	74·0
„ „ 6 P.M.	Tough brown head	75·0
„ 31, 2 P.M.	Ferment well roused up	75·0
	Attenuation of No. 1.	8·5
April 2, 2 P.M.	(Skimmed off yeast)	10·0
„ 11, 2 P.M.	„ „	15·0
„ 13, 2 P.M.	„ „	15·5
	No. 2.	
March 28, 5 P.M.	No action	68·0
„ „ 10 P.M.	Fine white head	70·0
„ 29, 9 A.M.	Thick yellow head	74·0
„ „ 6 P.M.	Fine tough brown head	77·0
„ 30, 9 A.M.	High roused-up rocky head	77·0
„ „ 6 P.M.	In rapid fermentation	76·5
„ 31, 2 P.M.	Throws up much yeast (skimmed off yeast)	76·0
	Attenuation of No. 2	12·7
April 2, 2 P.M.	„ „	15·5
„ 11, 2 P.M.	„ „	17·5
„ 13, 2 P.M.	„ „	18·2

The temperature of both had now fallen to 69° F., though each had been roused repeatedly; the yeast was therefore again skimmed off, and the beer run into barrels, and filled up with reserved wort three times a day as it worked over. On April the 18th the barrels were closed, having then lost, by attenuation—No. 1, 16·2 lbs., and No. 2, 19·6 lbs. Six weeks afterwards these ales were examined;—No. 1 was found muddy and unpleasant; whilst No. 2 had a fine fragrant aroma, a brisk, lively appearance, and was perfectly bright. On January 2nd, 1852, the casks were again examined;—No. 1 had now lost 17·9 lbs., and was bright, rich, and fine flavoured;

Digitized by Google

whilst No. 2, though bright and pleasant, had contracted a little acidity, and was becoming flat: it had lost, in all, 21½ lbs.

Two similar experiments, made about the same time in another quarter, gave almost exactly the same results; and, consequently, there can be little doubt that, where a quick sale and rapid consumption of beer can be ensured, the great object of the brewer should be to convert as much of the dextrine of his wort into sugar as is proportional to the rapidity of that consumption; whereas, for beer intended to keep, the opposite practice should be followed.

The conversion of any given amount of the dextrine wort into sugar may be effected either by keeping up the temperature of the mash-tun, and prolonging the operation of mashing; or, which is better and simpler, by merely preserving the wort for a few hours at a heat of 165° F., either in the underback or any other convenient vessel. We have found from experiment that a wort which when run out from the mash-tun had only 3 parts of sugar to 16 of dextrine, became by 10 hours' exposure to a heat of 165° converted almost altogether into sugar, — the proportions then being 17·8 of sugar to 1·2 of dextrine.

A very important part of the duty of a brewer should therefore be, first, the determination of the relative amounts of dextrine and sugar required to suit the taste of his customers, or the circumstances of the market, and next, the continued careful examination of his wort, so as to ensure that these proportions are regularly maintained; for by no other plan is it possible to ensure that certainty of result and uniformity of quality which are essential to the proper conducting of an expensive business like brewing. Far too little attention has hitherto been given to the fluctuating qualities of beer-wort; in warm weather, this wort should probably contain at least twice as much dextrine as in winter; yet this is the very period when, from the increased temperature of the air and materials, the largest quantity of sugar must be formed by those who mash upon a fixed and unvarying principle. Hence the proneness of the wort to ferment violently in summer is still further increased by the presence of an extra proportion of sugar; — whereas prudence would suggest, under such circumstances, a predominance of dextrine, and seek to effect this purpose by a low temperature in the mash-tun, and by shortening the period of mashing. As a general rule, in the management of wort, more sugar is requisite where small quantities are brewed at a time, than where large operations are conducted, for the loss of heat is relatively larger in small masses than in large ones; and, from what has been stated, it must be apparent, that, as the fermentation of dextrine is more easily checked by cold than that of sugar, the beer brewed in trifling quantities could not preserve a fermentative temperature, but would become chilled and dead from the excessive radiation of caloric, unless a principle existed in it capable of fermentation at the most ordinary temperatures of this country. If, therefore, beer wort consisting chiefly of dextrine be fermented in very cold weather, or with an insufficiency of yeast, or if the temperature happen to rise too high, so as to destroy or impair the fermentative power of the yeast, then a dull languid action will ensue, accompanied by what has been called the viscous fermentation, and the beer becomes permanently ropy, and is spoiled.

Although, clearly, it would be impossible to lay down any specific rule for the proper proportion of dextrine and sugar in beer wort, yet there could be no difficulty in each brewer determining for himself, and for the conditions of quantity, time of sale, time of year, and other contingencies, the requisite ratio to be established in his own case; and, as we have shown, nothing can be simpler than the means proposed for ascertaining the composition of wort.

The quantity of extract, per barrel weight, which a quarter of malt yields to wort, amounts to about 84lbs. The wort of the first extract is the strongest; the second contains, commonly, one-half the extract of the first; and the third, one-half of the second; according to circumstances.

To measure the degrees of concentration of the worts drawn off from the tun, a particular form of hydrometer, called a saccharometer, is employed, which indicates the number of pounds weight of liquid contained in a barrel of 36 gallons imperial measure. Now, as the barrel of water weighs 360lbs., the indication of the instrument, when placed in any wort, shows by how many pounds a barrel of that wort is heavier than a barrel of water; thus, if the instrument sinks with its poise till the mark 10 is upon a line with the surface of the liquid, it indicates that a barrel of that wort weighs ten pounds more than a barrel of water. See SACCHAROMETER.

Or, supposing the barrel of wort weighs 396lbs., to convert that number into specific gravity, we have the following simple rule: —

$$360 : 396 :: 100 : 1{\cdot}100;$$

at which density the wort contains about 25 per cent. of solid extract.

Digitized by Google

By the mashing operations before described, the malt is so much exhausted that it can yield no further extract useful for strong beer or porter. A weaker wort might no doubt still be drawn off for small beer, or for contributing a little to the strength of the next mashing of fresh malt. But this I believe is seldom practised by respectable brewers, as it impoverishes the grains which they dispose of for feeding cattle.

The wort should be transferred into the copper, and made to boil as soon as possible, for if it remains long in the under-back it is apt to become acescent. The steam moreover raised from it in the act of boiling serves to screen it from the oxygenating or acidifying influence of the atmosphere. Until it begins to boil, the air should be excluded by some kind of cover.

Dr. Piesse, in 1840, read a paper before the Chemical Society, showing that much extract was left in the malt after brewing, and that it was this matter, which was convertible into sugar, which gave its feeding qualities to the 'grains.' It was shown that the malt, after the first wort was drawn off, still contained a portion of starch which was not converted into sugar, and that the presence of diastase was necessary to effect this conversion. As diastase is very soluble, there was none of course left in the infused malt. It is, therefore, recommended by Dr. Piesse, that malt containing diastase should be added to the second wort. 'In brewing 30 quarters, I should take 29 quarters for the first mash and add the remaining quarter to the second, by which all the starch it was contended would be converted into sugar. To prevent the access of air—which tends to induce acidity—to the wort, it is suggested that a board the size of the back in which it is contained should float on the surface of the fluid. (*Transactions of the Chemical Society*, 1841.)

The Boiling.—The wort drawn from the mash-tun, whenever it is pumped into the copper, should receive its allowance of hops. Besides evaporating off a portion of the water, and thereby concentrating the wort, boiling has a twofold object. In the first place, it coagulates the albuminous matter, partly by the heat, and partly by the principles in the hops, and thereby causes a general clarification of the whole mass, with the effect of separating the muddy matters in a flocculent form. Secondly, during the ebullition, the residuary starch and hordeine of the malt are converted into a limpid sweetish mucilage, the *dextrine* above described, while some of the glutinous stringy matter is rendered insoluble by the tannin principle of the hops, which favours still further the clearing of the wort. By both operations the keeping quality of the beer is improved. This boil must be continued some time; a longer time for the stronger, and a shorter for the weaker beers. There is usually one-seventh or one-sixth part of the water dissipated in the boiling copper. From one to three hours' boil is deemed long enough in many well-conducted breweries.

Many prefer adding the hops when the wort has just come to the boiling point. Their effect is to repress the passage into the acetous stage, which would otherwise inevitably ensue in a few days. In this respect, no other vegetable production hitherto discovered can be a substitute for the hop. The odorant principle is not so readily volatilised as would at first be imagined; for when hop is mixed with strong beer wort, and boiled for many hours, it can still impart a very considerable degree of its flavour to weaker beer. By mere infusion in hot beer or water, without boiling, the hop loses very little of its soluble principles. The tannin of the hop combines, as we have said, with the vegetable albumen of the barley, and helps to clarify the liquor. Should there be a deficiency of albumen and gluten, in consequence of the mashing having been done at such a heat as to have coagulated them beforehand, the defect may be remedied by the addition of a little gelatine to the wort copper, either in the form of calf's foot, or of a little isinglass. If the hops be boiled in the wort for a longer period than 5 or 6 hours, they lose a portion of their fine flavour; but if their natural flavour be rank, a little extra boiling improves it. Many brewers throw the hops in upon the surface of the boiling wort, and allow them to swim there for some time, that the steam may penetrate them, and open their pores for a complete solution of their principles when they are pushed down into the liquor.

The quantity of hop to be added to the wort varies according to the strength of the beer, the length of time it is to be kept, or the heat of the climate where it is intended to be sent. For beer 4½ lbs. of hops are required to a quarter of malt; but when it is to be highly aromatic and remarkably clear, and for the stronger kinds of ale and porter, the rule, in England, is to take a pound of hops for every bushel of malt, or 8 lbs. to a quarter. Common beer has seldom more than a quarter of a pound of hops to the bushel of malt.

The Cooling.—The contents of the copper are run into what is called the hop-back, on the upper part of which is fixed a drainer, to keep back the hops. In some arrangements a pump is placed in the hop-back, for the purpose of raising the wort to the coolers, usually placed in an airy situation upon the top of the brewery. Two coolers are

Digitized by Google

indispensable when we make two kinds of beer from the same brewing, and even in single brewings, called *gyles*, if small beer is to be made. One of these coolers ought to be placed above the level of the other. As it is of great consequence to cool the worts down to the fermenting pitch as fast as possible, various contrivances have been made for effecting this purpose. The common cooler is a square wooden cistern, about 6 inches deep, and of such an extent of surface that the whole of one boil may only occupy 2 inches, or thereabouts of depth in it. For a quantity of wort equal to about 1500 gallons, its area should be at least 54 feet long and 20 feet wide. The seams of the cooler must be made perfectly water-tight and smooth, so that no liquor may lodge in them when they are emptied. The utmost cleanliness is required, and an occasional sweetening with lime-water.

The hot wort reaches the cooler at a temperature of from 200° to 208°, according to the power of the pump. Here it should be cooled to the proper temperature for the fermenting tun, which may vary from 54° to 64°, according to circumstances. The refrigeration is accomplished by the evaporation of a portion of the liquor; it is more rapid in proportion to the extent of the surface, to the low temperature and the dryness of the atmosphere surrounding the cooler. The renewal of a body of cool dry air, by the agency of a fan, may be employed with great advantage. The cooler itself must be so placed that its surface shall be freely exposed to the prevailing wind of the district, and be as free as possible from the eddy of surrounding buildings. It is thought by many, that the agitation of the wort during its cooling is hurtful. Were the roof made movable, so that the wort could be readily exposed, in a clear night, to the aspect of the sky, it would cool rapidly by radiation, on the principles explained by Dr. Wells, in his "Essay on Dew," and more recently by M. Melloni.

When the cooling is effected by evaporation alone, the temperature falls very slowly, even in cold air, if it be loaded with moisture. But when the air is dry, the evaporation is vigorous, and the moisture exhaled does not remain incumbent on the liquor, as in damp weather, but is diffused widely in space. Here we can understand how wort cools so rapidly in the spring and autumn, when the air is generally dry, and even more quickly than in winter, when the air is cooler, but loaded with moisture. In fact, the cooling process goes on better when the atmosphere is from 50° to 55°, than when it falls to the freezing point, because in this case, if the air be still, the vapours generated remain on the surface of the liquor, and prevent further evaporation. In summer the cooling can take place only during the night.

In consequence of the evaporation during this cooling process, the bulk of the wort is considerably reduced; thus, if the temperature at the beginning was 208°, and if it be at the end 64°, the quantity of water necessary to be evaporated to produce this refrigeration, would be nearly $\frac{1}{8}$th of the whole, putting radiation and conduction of heat out of the question. The effect of this will be a proportional concentration of the beer.

The period of refrigeration, in a well-constructed cooler, amounts to 6 or 7 hours in favourable weather, but to 12 or 15 in other circumstances. The quality of the beer is much improved by shortening this period; because, in consequence of the great surface which the wort exposes to the air, it readily absorbs oxygen, and passes into the acetous fermentation with the production of various mouldy spots—an evil to which ill-hopped beer is particularly liable. Various schemes have been contrived to cool wort, by transmitting it through the convolutions of a pipe immersed in cold water. The best plan is to expose the hot wort for some hours freely to the atmosphere and the cooler, when the loss of heat is most rapid by evaporation and other means, and when the temperature falls to 100°, or thereabout, to transmit the liquor through a zig-zag pipe, laid almost horizontally in a trough of cold water. The various methods described under REFRIGERATOR are more complex, but they may be practised in many situations with considerable advantage.

Whilst the wort reposes in the cooler, it lets fall a slight sediment, which consists partly of fine flocks of coagulated albumen combined with tannin, and partly of starch, which had been dissolved at the high temperature, and separates at the lower. The wort should be perfectly limpid, for a muddy liquor never produces transparent beer. Such beer contains, besides mucilaginous sugar and gum, usually some starch, which even remains after the fermentation, and hinders its clarifying, and gives it a tendency to sour. The wort contains more starch the hotter it has been mashed, the less hops have been added, and the shorter time it has been boiled. The presence of starch in the wort may be made made manifest by adding a little solution of iodine in alcohol to it, when it will become immediately blue. We thus see that the tranquil cooling of wort in a proper vessel has an advantage over cooling it rapidly by a refrigeratory apparatus.

When the wort is sufficiently cool, it is let down into the fermenting tun. In this transfer, the cooling might be carried several degrees lower, were the wort made to pass down through a tube inclosed in another tube, along which a stream of cold water

Digitized by Google

is flowing in the opposite direction. These fermenting tuns are commonly called *gyle-tuns*, or working tuns, and are either square or circular. In the great London breweries their size is such that they contain from 1200 to 1500 barrels. The quantity of wort introduced at a time must, however, be considerably less than the capacity of the vessel, to allow room for the head of yeast which rises during the process of fermentation; if the vessel be cylindrical, this head is proportional to the depth of the worts. In certain kinds of fermentation, it may rise to a third of that depth. In general, the fermentation proceeds more uniformly and constantly in large masses, because they are little influenced by vicissitudes of temperature; smaller vessels, on the other hand, are more easily handled.

The Fermentation.—The *general* view of fermentation will be found under that title. A few remarks on the fermentation peculiar to beer will alone be noticed in this place. During the fermentation of wort, a portion of its saccharine matter is converted into alcohol, and the wort thus changed is beer. It is necessary that this conversion of the sugar be only partial, for beer which contains no undecomposed sugar would soon turn sour, and even in the casks its alcohol undergoes a slow fermentation into vinegar. The amount of this excess of sugar is greater in proportion to the strength of the wort, since a certain quantity of alcohol, already formed, prevents the operation of the ferment on the remaining wort. Temperature has the greatest influence upon the fermentation of wort. A temperature of from 55° to 60° of the liquor, when that of the atmosphere is 55°, is most advantageous for the commencement. The warmth of the wort as it comes into the gyle-tun must be modified by that of the air in the apartment. In winter, when this apartment is cold, the wort should not be cooled under 64° or 60°, as in that case the fermentation would be tedious or interrupted, and the wort liable to spoil or become sour. In summer, when the temperature of the place rises to above 75°, the wort should be cooled, if possible, down to 55°, for which purpose it should be let in by the system of double pipes above mentioned. The higher the temperature of the wort, the sooner will the fermentation begin and end, and the less is it in our power to regulate its progress. The expert brewer must steer a middle course between these two extremes, which threaten to destroy his labours. In some breweries a convoluted pipe is made to traverse or go round the sides of the gyle-tun, through which warm water is allowed to flow in winter, and cold in summer, so as to modify the temperature of the mass to the proper fermenting pitch. If there be no contrivance of this kind, the apartment may be cooled by suspending wet canvas opposite the windows in warm weather, or warmed by kindling a fire in a small stove within it in cold weather.

When the wort is discharged into the gyle-tun, it must receive its dose of yeast, which has been previously mixed with a quantity of the wort, and left in a warm place till it has begun to ferment. This mixture, called *lobb*, is then to be put into the tun, and stirred well through the mass. The yeast should be taken from similar beer. Its quantity must depend upon the temperature, strength, and quantity of the wort. In general, one gallon of yeast is sufficient to set 100 gallons of wort in complete fermentation. An excess of yeast is to be avoided, lest the fermentation should be too violent, and be finished in less than the proper period of 6 or 8 days. More yeast is required in winter than summer; for, at a temperature of 50°, a double quantity may be used to that at 68°.

Six or eight hours after adding the yeast, the tun being meanwhile covered, the fermentation becomes active: a white milky-looking froth appears, first on the middle, and spreads gradually over the whole surface; but continues highest in the middle, forming a frothy elevation, the height of which increases with the progress of the fermentation, and whose colour gradually changes to a bright brown, the result, apparently, of the oxidation of the extractive contained in this yeasty top. This covering screens the wort from the contact of atmospheric air. During this time, there is a perpetual disengagement of carbonic acid gas, which is proportional to the quantity of sugar converted into alcohol. The warmth of the fermenting liquid increases at the same time, and is at a maximum when the fermentation has come to its highest point. This increase of temperature amounts to from 9° to 14° or upwards, and is the greater the more rapid the fermentation. But in general, the fermentation is not allowed to proceed so far in the gyle-tun, for after it has advanced a little way, the beer is *cleansed*—that is, drawn off into other vessels, which are large barrels set on end, with large openings in their top, furnished with a sloping tray for discharging an excess of yeast into the wooden trough, in which the *stillions* stand. These *stillions* are placed in communication with a store-tub, which keeps them always full by hydrostatic pressure, so that the head of yeast may spontaneously flow over, and keep the body of liquor in the cask clean. This apparatus will be explained in describing the brewery plant. See the *figures, infrà*.

It must be observed, that the quantity of yeast, and the heat of fermentation, differ

Digitized by Google

for every different quality of beer. For mild ale, when the fermentation has reached 75°, its first flavour begins; at 80° the flavour increases; at 85° it approaches the high flavour; at 90° it is high; but it may be carried to 100° and upwards, for particular purposes. A wort of 30 lbs. per barrel (sp. gr. 1·088), ought to increase about 15°, so that in order to arrive at 80°, it should be set at 65°. The quantity of yeast for such an ale should be from 2 to 3 lbs. per barrel. The higher the heat, the less yeast is necessary. If the heat of the fermentation should at any time fall, it must be raised by a supply of fresh yeast, well stirred in; but this practice is not advisable in general, because rousing the worts in the gyle-tun is apt to communicate a rank flavour of yeast to the ale. It is the practice of many experienced brewers to look every 2 hours into the gyle-tun, chiefly with the view of observing the progress of the heat, which is low at first, but afterwards often increases half a degree per hour, and subsequently declines, as the fermentation approaches its conclusion, till at length the heat becomes uniform, or sometimes decreases, before the fermentation is finished, especially where the quantity operated upon is small.

Some brewers recommend, when the fermentation is carried to its utmost period, to add about 7 lbs. of wheat or bean flour to a gyle-tun of 25 or 30 barrels at the time of *cleansing*, so as to quicken the discharge of the yeast by disengagement of more carbonic acid. The flour should be whisked up in a pail, with some of the beer, till the lumps are broken, and then poured in. By early cleansing, the yeast is preserved longer in a state proper for a perfect fermentation, than by a contrary practice.

For old ale, which is to be long kept, the heat of the fermentation should not exceed 75°, but a longer time is required to complete the fermentation and ensure the future good flavour of the ale.

For porter, the general practice is, to use from 4 to 4½ lbs of hops per barrel for keeping; though what is termed mild or mixing porter, has not more than 3 or 3½ lbs. The heat of fermentation must not exceed 70°, and begin about 60°. If the heat tend to increase much above that pitch in the gyle-tun, the porter should be *cleansed* by means of the *stillions*. At this period of the fermentation, care should be taken that the sweetness of the malt be removed, for which purpose more yeast may be used than with any other beer of the same strength. The quantity is from 3 to 4 lbs. per barrel, rousing the wort in the gyle-tun every 2 hours in the day-time.

When the plan of *cleansing* casks is not employed, the yeast is removed from the surface of the fermenting tun by a skimmer, and the clear beer beneath is then drawn off into the ripening tuns, called *store-vats*, in which it is mixed up with different brewings, to suit the taste of the customers. This transfer must take place whenever the extrication of carbonic acid has nearly ceased; lest the alcohol formed should dissolve some of the floating yeast, acquire thereby a disagreeable taste, and pass partially into the acetous state.

In this process, during the formation of vinous spirit at the expense of the sugar, the albumen and gluten diffused through the beer, being acted upon by the alcohol, become insoluble; one portion of them is buoyed to the top with the carbonic acid gas, to form the frothy yeast, and another portion falls to form the bottom barm. The former consists of the same materials as the wort, with a large proportion of gluten, which forms its active constituent; the latter is a peculiar deposit, consisting of the same gluten, mixed with the various dense impurities of the wort, and may be also used as a ferment, but is cruder than the floating yeast. The amount of yeast is proportional to the activity of the fermentation, or extrication of carbonic acid gas, as also to the heat of the mashing process, and the quantity of starch or flour unaltered by germination. Pale malt affords, usually, more yeast than malt highly kilned. When the yeast becomes excessive, from too violent fermentation, it should be skimmed off from time to time, which will tend to cool the liquor and moderate the intestine changes.

After the beer is let down into the close store-tuns in the cellar, an obscure fermentation goes on for a considerable period in its body, which increases its spirituous strength, and keeps up in it a constant impregnation of carbonic acid gas, so as to render it lively and agreeable to the taste, when it is casked off for sale. It would appear that beer is never stationary in quality while it is contained in the tuns; for the moment when it ceases to improve by the decomposition of its residuary sugar, it begins to degenerate into vinegar. The result may be produced either by the exhaustion of the saccharine or by the fermentative matter. The store cellar should therefore be under ground, free from alternations of temperature, vibrations of carriages, and as cool as possible. In the great London breweries, the fermentation is rendered very complete in the cleansing butts; so that a slow and steady ripening is ensured in the great store tuns. The gyle-tuns are too capacious to permit the fermentation to be finished, with either safety or sufficient dispatch in them.

Beer, in its perfect condition, is an excellent and healthful beverage, combining, in

Digitized by Google

some measure, the virtues of water, of wine, and of food, as it quenches thirst, stimulates, cheers, and strengthens. The vinous portion of it is the alcohol, proceeding from the fermentation of the malt sugar. Its amount, in common strong ale or beer, is about 4 per cent., or four measures of spirits, specific gravity 0·825, in 100 measures of the liquor. The best brown stout porter contains 6 per cent., the strongest ale even 8 per cent., but common beer only one. The nutritive part of the beer is the undecomposed gum-sugar, and the starch-gum not changed into sugar. Its quantity is very variable, according to the original starch of the wort, the length of the fermentation, and the age of the beer.

The main feature of good beer is fine colour and transparency; the production of which is an object of great interest to the brewer. Attempts to clarify it in the cask seldom fail to do it harm. The only thing that can be used with advantage for *fining* foul or muddy beer, is isinglass. For porter, as commonly brewed, it is frequently had recourse to. A pound of good isinglass will make about 12 gallons of *finings*. It is cut into slender shreds, and put into a tub with as much vinegar or hard beer as will cover it, in order that it may swell and dissolve. In proportion as the solution proceeds, more beer must be poured upon it, but it need not be so acidulous as the first, because, when once well softened by the vinegar, it readily dissolves. The mixture should be frequently agitated with a bundle of rods, till it acquires the uniform consistence of thin treacle, when it must be equalised still more by passing through a tammy cloth, or a sieve. It may now be made up with beer to the proper measure of dilution. The quantity generally used is from a pint to a quart per barrel, more or less, according to the foulness of the beer. But before putting it into the butt, it should be diffused through a considerable volume of the beer with a whisk, till a frothy head be raised upon it. It is in this state to be poured into the cask, briskly stirred about; after which the cask must be bunged down for at least 24 hours, when the liqour should be limpid. Sometimes the beer will not be improved by this treatment; but this should be ascertained beforehand, by drawing off some of the beer into a cylindric jar or phial, and adding to it a little of the finings. After shaking and setting down the glass, we shall observe whether the feculencies begin to collect in flocky parcels, which slowly subside; or whether the isinglass falls to the bottom without making any impression upon the beer. This is always the case when the fermentation is incomplete, or a secondary decomposition has begun. Mr. Jackson has accounted for this clarifying effect of isinglass in the following way.

The isinglass, he thinks, is first of all rather diffused mechanically, than chemically dissolved, in the sour beer or vinegar, so that when the finings are put into the foul beer, the gelatinous fibres, being set free in the liqour, attract and unite with the floating feculencies, which before this union were of the same specific gravity with the beer, and therefore could not subside alone; but having now acquired additional weight by the coating of fish-glue, precipitate as a flocculent magma. This is Mr. Jackson's explanation; to which we might add, that if there be the slightest disengagement of carbonic acid gas, it will keep up an obscure locomotion in the particles, which will prevent the said light impurities, either alone or when coated with isinglass, from subsiding. The beer is then properly enough called *stubborn* by the coopers. The true theory probably of the action of isinglass is, that the tannin of the hops combines with the fluid gelatine, and forms a flocculent mass which envelopes the muddy particles of the beer, and carries them to the bottom as it falls, and forms a sediment. When, after the finings are poured in, no proper precipitate ensues, it may be made to appear by the addition of a little decoction of hop.

Mr. Richardson, the author of the well-known brewer's saccharometer, gives the following as the densities of different kinds of beer:—

Beer.	Pounds per Barrel.	Specific Gravity.
Burton ale, 1st sort - - -	40 to 43	1·111 to 1·120
„ 2nd „ - - -	35 to 40	1·097 to 1·111
„ 3rd „ - - -	28 to 33	1·077 to 1·092
Common ale - - - -	25 to 27	1·070 to 1·073
Ditto ditto - - - -	21	1·058
Porter, common sort - - -	18	1·050
„ double - - - -	20	1·055
„ brown stout - - -	23	1·064
„ best brown stout - -	26	1·072
Common small beer - - -	6	1·014
Good table beer - - -	12 to 14	1·033 to 1·039

Digitized by Google

When *small beer* is brewed after *ale* or *porter*, only one after-mash is to be made; but where this is not done, there may be two mashes, in order to economise malt to the utmost. We may let on the water at 160° or 165°, in any convenient quantity, infuse for an hour or thereabouts, then run it off, and pump into the copper, putting some hops into it, and causing it to boil for an instant, when it may be transferred to the cooler. A second mash or return may be made in the same manner, but at a heat 5° lower; and then disposed of in the boiler with some hops, which may remain in the copper during the night at a scalding heat, and may be discharged into the cooler in the morning. These two returns are to be let down into the under-back immediately before the next brewing, and thence heated in the copper for the next mashing of fresh malt, instead of hot water, commonly called *liquor* in the breweries. But allowance must be made, in the calculation of the worts, for the quantity of fermentable matter in these two returns. The nett aggregate saving is estimated from the gravity of the return taken when cold in the cooler. A slight economy is also made in the extra boiling of the used hops.

It may be remarked that Mr. Richardson somewhat underrates the gravity of porter, which is now seldom under 20 lbs. per barrel. The criterion for transferring from the gyle-tun to the cleansing butts is the attenuation caused by the production of alcohol in the beer: when that has fallen to 10 lbs. or 11 lbs., which it usually does in 48 hours, the cleansing process is commenced. The heat is at this time generally 75°, if it was pitched at 65°; for the heat and the attenuation go hand in hand.

About forty years ago, it was customary for the London brewers of porter to keep immense stocks of it for eighteen months or two years, with the view of improving its quality. The beer was pumped from the cleansing butts into store-vats holding from twenty to twenty-five gyles or brewings of several hundred barrels each. The store-vats had commonly a capacity of 5000 or 6000 barrels; and a few were double, and one was treble, this size. The porter, during its long repose in these vats, became fine, and by obscure fermentation its saccharine mucilage was nearly all converted into vinous liquor, and partly dissipated in carbonic acid. Its hop-bitter was also in a great degree decomposed. *Good hard beer* was the boast of the day. This was sometimes softened by the publican, by the addition of some mild new-brewed beer. Of late years, the taste of the metropolis has undergone such a complete revolution in this respect, that nothing but the mildest porter will now go down. Hence, six weeks is a long period for beer to be kept in London; and much of it is drunk when only a fortnight old. Ale is for the same reason come greatly into vogue; and the two greatest porter houses, Messrs. Barclay, Perkins, and Co., and Truman, Hanbury, and Co., have become extensive and successful brewers of mild ale, to please the changed palate of their customers.

We shall add a few observations upon the brewing of Scotch ale. This beverage is characterised by its pale amber colour and its mild balsamic flavour. The bitterness of the hop is so mellowed with the malt as not to predominate. The ale of Preston Pans is, in fact, the best substitute for wine which barley has hitherto produced. The low temperature at which the Scotch brewer pitches his fermenting tun restricts his labours to the colder months of the year. He does nothing during four of the summer months. He is extremely nice in selecting his malt and hops; the former being made from the best English barley, and the latter being the growth of Farnham or East Kent. The yeast is carefully looked after, and measured into the fermenting tun in the proportion of one gallon to 240 gallons of wort.

Only one mash is made by the Scotch ale brewer, and that pretty strong; but the malt is exhausted by eight or ten successive sprinklings of liquor (hot water) over the goods (malt), which are termed, in the vernacular tongue, *sparges*. These waterings percolate through the malt on the mash-tun bottom, and extract as much of the saccharine matter as may be sufficient for the brewing. By this simple method much higher specific gravities may be obtained than would be practicable by a second mash. With malt, the infusion or saccharine fermentation of the *diastase* is finished with the first mash; and nothing remains but to wash away from the goods the matter which that process has rendered soluble. It will be found on trial that 20 barrels of wort drawn from a certain quantity of malt, by two successive mashings, will not be so rich in fermentable matter as 20 barrels extracted by ten successive sparges of two barrels each. The grains always remain soaked with wort like that just drawn off, and the total residual quantity is three-fourths of a barrel for every quarter of malt. The gravity of this residual wort will on the first plan be equal to that of the second mash; but, on the second plan, it will be equal only to that of the tenth sparge, and will be more attenuated in a very high geometrical ratio. The only serious objection to the sparging system is the loss of time by the successive drainages. A mash-tun with a steam jacket, promises to suit the sparging system well, as it would keep up

Digitized by Google

an uniform temperature in the goods, without requiring them to be sparged with very hot liquor.

The first part of the Scotch process seems of doubtful economy; for the mash liquor is heated so high as 180°. After mashing for about half an hour, or till every particle of the malt is thoroughly drenched, the tun is covered, and the mixture left to infuse about three hours; it is then drained off into the under-back, or preferably into the wort copper.

After this wort is run off, a quantity of liquor (water), at 180° of heat, is sprinkled uniformly over the surface of the malt; being first dashed on a perforated circular board, suspended horizontally over the mash-tun, wherefrom it descends like a shower upon the whole of the goods. The percolating wort is allowed to flow off by three or more small stopcocks round the circumference of the mash-tun, to insure the equal diffusion of the liquor.

The first sparge being run off in the course of twenty minutes, another similar one is affused; and thus in succession till the whole of the drainage, when mixed with the first mash-wort, constitutes the density adapted to the quality of the ale. Thus, the strong worts are prepared, and the malt is exhausted either for table beer, or for a *return*, as pointed out above. The last sparges are made 5° or 6° cooler than the first.

The quantity of hops seldom exceeds four pounds to the quarter of malt. The manner of boiling the worts is the same as that above described; but the conduct of the fermentation is peculiar. The heat is pitched at 50°, and the fermentation continues from a fortnight to three weeks. Were three brewings made in the week, seven or eight working tuns would thus be in constant action; and, as they are usually in one room, and some of them at an *elevation* of temperature of 15°, the apartment must be propitious to fermentation, however low its heat may be at the commencement. No more yeast is used than is indispensable: if a little more be needed, it is made effective by rousing up the tuns twice a day from the bottom.

When the progress of the attenuation becomes so slack as not to exceed half a pound in the day, it is prudent to cleanse, otherwise the top barm might re-enter the body of the beer, and it would become *yeast-bitten*. When the ale is cleansed, the head, which has not been disturbed for some days, is allowed to float on the surface till the whole of the *then* pure ale is drawn off into the casks. This top is regarded as a sufficient preservative against the contact of the atmosphere. The Scotch do not skim their tuns, as the London ale brewers commonly do. The Scotch ale, when so cleansed, does not require to be set upon close stillions. It throws off little or no yeast, because the fermentation was nearly finished in the tun. The strength of the best Scotch ale ranges between 32 and 44 pounds to the barrel; or it has a specific gravity of from 1·088 to 1·122, according to the price at which it is sold. In a good fermentation, seldom more than a fourth of the original gravity of the wort remains at the period of the cleansing. Between one-third and one-fourth is the usual degree of attenuation. Scotch ale soon becomes fine, and is seldom racked for the home market. The following Table will show the progress of fermentation in a brewing of good Scotch ale:—

20	barrels of	mash-worts of	$42\frac{1}{2}$	pounds gravity	= 860·6
20	—	returns	$6\frac{1}{10}$	„ „	= 122
					12) 982·6

pounds weight of extract per quarter of malt = 81

Fermentation:—

March 24, pitched the tun at 51°: yeast 4 gallons.

		Temp.	Gravity.
	25.	52 degrees.	41 pounds.
	28.	56 „	39 „
	30.	60 „	34 „
April	1.	62 „	32 „
	4.	65 „	29 added 1 lb. of yeast.
	5.	66 „	25 pounds.
	6.	67 „	23 „
	7.	67 „	20 „
	8.	66 „	18 „
	9.	66 „	15 „
	10.	64 „	14·5 cleansed.*

* Brewing (Society for diffusing Useful Knowledge), p. 156.

Digitized by Google

Dr. Ure was employed to make experiments on the density of worts, and the fermentative changes which they undergo, for the information of a committee of the House of Commons, which sat in July and August, 1830: the following is a short abstract of that part of his evidence which bears upon the present subject: –

"My first object was to clear up the difficulties which, to common apprehension, hung over the matter, from the difference in the scales of the saccharometers in use among the brewers and distillers of England and Scotland. I found that one quarter of good malt would yield to the porter brewer a barrel Imperial measure of wort, at the concentrated specific gravity of 1·234. Now, if the decimal part of this number be multiplied by 360, being the number of pounds weight of water in the barrel, the product will denote the excess, in pounds, of the weight of a barrel of such concentrated wort over that of a barrel of water, and that product is, in the present case, 84·24 pounds.

"Mr. Martineau, jun., of the house of Messrs. Whitbread and Company, and a gentleman connected with another great London brewery, had the kindness to inform me that their average product from a quarter of malt was a barrel of 84 lbs. gravity. It is obvious, therefore, that by taking the mean operation of two such great establishments, I must have arrived very nearly at the truth.

"It ought to be remarked that such a high density of wort as 1·234 is not the result of any direct experiment in the brewery, for infusion of malt is never drawn off so strong; that density is deduced by computation from the quantity and quality of several successive infusions; thus, supposing a first infusion of the quarter of malt to yield a barrel of specific gravity 1·112, a second to yield a barrel at 1·091, and a third a barrel at 1·031, we shall have three barrels at the mean of these three numbers, or one barrel at their sum, equal to 1·234.

"I may here observe that the arithmetical mean or sum is not the true mean or sum of the two specific gravities; but this difference is either not known or disregarded by the brewers. At low densities this difference is inconsiderable, but at high densities it would lead to serious errors. At specific gravity 1·231, wort or syrup contains one-half of its weight of solid pure saccharum, and at 1·1045 it contains one-fourth of its weight; but the brewer's rule, when here applied, gives for the mean specific gravity $1{\cdot}1155 = \frac{1{\cdot}231 + 1{\cdot}000.}{2}$ The contents in solid saccharine matter at that density are however 27¼ per cent., showing the rule to be 2¼ lbs. wrong in excess on 100 lbs., or 9 lbs. per barrel.

"The specific gravity of the solid dry extract of malt-wort is 1·264; it was taken in oil of turpentine, and the result reduced to distilled water as unity. Its specific volume is 0·7911, that is, 10 lbs. of it will occupy the volume of 7·911 lbs. of water. The mean specific gravity, by computation of a solution of that extract in its own weight of water, is 1·1166; but, by experiment, the specific gravity of that solution is 1·216, showing considerable condensation of volume in the act of combination with water.

"The following Table shows the relation between the specific gravities of solutions of malt extract and the per-centage of solid extract they contain: —

Extract of Malt.		Water.	Malt Extract in 100.	Sugar in 100.	Specific gravity.
600	+	600	50·00	47·00	1·2160
600	+	900	40·0	37·00	1·1670
600	+	1200	33·3	31·50	1·1350
600	+	1500	28·57	26·75	1·1130
600	+	1800	25·00	24·00	1·1000

"The extract of malt was evaporated to dryness, at a temperature of about 250° F., without the slightest injury to its quality or any empyreumatic smell. Bate's tables have been constructed on solutions of sugar, and not with solutions of extract of malt, as they agree sufficiently well with the former, but differ materially from the latter. Allen's tables give the account of a certain form of solid saccharine matter extracted from malt, and dried at 175° F., in correspondence to the specific gravity of the solution; but I have found it impossible to make a solid extract from infusions of malt, except at much higher temperatures than 175° F. Indeed, the numbers on Allen's saccharometer scale clearly show that his extract was by no means dry: thus, at 1·100 of gravity he assigns 29·669 per cent. of solid saccharine matter; whereas there is at that density of solid extract only 25 per cent. Again, at 1·135, Allen gives 40 parts per cent. of solid extract, whereas there are only 33⅓ present."

Digitized by Google

The following Table shows the origin and effect of fermentation in the reduction of gravity, in a number of practical experiments:—

Original Gravity of the Worts.	lbs. per Barrel of Saccharine Matter.	Specific Gravity of the Ale.	lbs. per Barrel of Saccharine Matter.	Attenuation, or Saccharumdecomposed.
1·0950	88·75	1·0500	40·25	0·478
1·0918	85·62	1·0420	38·42	0·552
1·0829	78·125	1·0205	16·87	0·787
1·0862	80·625	1·0236	20·00	0·757
1·0780	73·75	1·0280	24·25	0·698
1·0700	65·00	1·0285	25·00	0·615
1·1002	93·75	1·0400	36·25	0 613
1·1025	95·93	1·0420	38·42	0·600
1·0978	91·56	1·0307	27·00	0·705
1·0956	89·37	1·0358	32·19	0·640
1·1130	105·82	1·0352	31·87	0·661
1·1092	102·187	1·0302	26·75	0·605
1·1171	110·00	1·0400	36·25	0·669
1.1030	96·40	1·0271	23·42	0·757
1·0660	61·25	1·0214	17·80	0·709

The second column here does not represent the solid extract, but the pasty extract obtained as the basis of Mr. Allen's saccharometer, and therefore each of its numbers is somewhat too high. The last column, also, must be in some measure erroneous, on account of the quantity of alcohol dissipated during the process of fermentation. It must be likewise incorrect, because the density due to the saccharine matter will be partly counteracted by the effect of the alcohol present in the fermented liquor. In fact, the attenuation does not correspond to the strength of the wort; being greatest in the third brewing and smallest in the first. The quantity of yeast for the above ale brewings in the Table was, upon an average, one gallon for 108 gallons; but it varied with its quality, and with the state of the weather, which, when warm, permits much less to be used with propriety.

The good quality of the malt, and the right management of the mashing, may be tested by the quantity of saccharine matter contained in the successively drawn worts. With this view, an aliquot portion of each of them should be evaporated by a safety-bath heat to a nearly concrete consistence, and then mixed with twice its volume of strong spirit of wine. The truly saccharine substance will be dissolved, while the starch and other matters will be separated; after which the proportions of each may be determined by filtration and evaporation. Or an equally correct, and much more expeditious, method of arriving at the same result would be, after agitating the viscid extract with the alcohol in a tall glass cylinder, to allow the insoluble fecula to subside, and then to determine the specific gravity of the supernatant liquid by a hydrometer. The additional density which the alcohol has acquired will indicate the quantity of malt sugar which it has received. The following Table, constructed by Dr. Ure, at the request of Henry Warburton, Esq., M.P., chairman of the Molasses Committee of the House of Commons in 1830, will show the brewer the principle of this important inquiry. It exhibits the quantity in grains' weight of sugar requisite to raise the specific gravity of a gallon of spirit of different densities to the gravity of water = 1·000.

Specific Gravity of Spirit.	Grains' Weight of Sugar in the Gallon Imperial.
0·995	980
0·990	1·890
0·985	2·800
0·980	3·710
0·975	4·690
0·970	5·600
0·965	6·650
0·960	7·070
0·955	8·400
0·950	9·310

The immediate purpose of this Table was to show the effect of saccharine matter in disguising the presence or amount of alcohol in the weak feints of the distiller. But a similar Table might easily be constructed, in which, taking a uniform quantity of alcohol of 0·825, for example, the quantity of sugar in any wort-extract would be

Digitized by Google

shown by the increase of specific gravity which the alcohol received from agitation with a certain weight of the wort, inspissated to a nearly solid consistence by a safety-pan made on the principle of Dr. Ure's patent sugar-pan. (See SUGAR.) Thus, the normal quantities being 1000 grains'-measure of alcohol, and 100 grains by weight of inspissated mash-extract, the hydrometer would at once indicate, by help of the Table, first, the quantity per cent. of truly saccharine matter, and next, by subtraction, that of farinaceous matter present in it.

The advance of the arts is gradually assuming a character which will no longer permit any manufacturer to neglect the assistance of science; and those who first take advantage of the power of knowledge will assuredly leave their fellow-labourers behind. From being an uncertain and hazardous operation, brewing must ere long become a fixed and definite principle based upon facts well understood, and capable of perpetual repetition and reproduction at will. To sum up briefly the general details of ale brewing, we may state, that, for most kinds of ale, the attenuation in the first instance should be finished in from 6 to 21 days, according to the strength of the wort; that this attenuation should approach to two-thirds of the whole weight; and that after tunning and cleansing, the ale itself should weigh about one-fourth of the original gravity of the wort. Thus, if the fermenting tun be set with wort of 27lbs., then the attenuation should bring it down to 9 or 10lbs., and the subsequent operations produce an ale weighing from 6 to 7lbs. When these conditions are fulfilled, without much extra trouble or attention, the ale is pretty certain to turn out well, though, in in some localities, ale is never attenuated to more than one-half its original gravity: this kind of ale is, however, very apt to become sour in hot weather and ropy in cold.

Some additional remarks on the brewing of porter, which differs from that of ale both in the nature of the materials used and in the mode of finishing the fermentation, are required. Porter owes its peculiar colour and flavour to burnt saccharine or starchy matter; and this was formerly obtained by burning sugar until it exhaled the odour called by French writers *caramel*. At present, however, nothing but highly-torrefied malt is used; and of this there are several kinds, as brown malt, imperial malt, and black malt; all of which are used by some brewers, whilst others employ only the brown and black, and a few the black alone, for giving colour and flavour. The fermentative quality or saccharine, is, however, the same as that of ale, and is derived from pale or amber malt. As a general rule, the ratio of the colouring and flavouring malts are to the saccharine as about 1 to 5 or 1 to 4; but where black malt only is used, the proportion does not exceed 1 to 10.

The employment of these burnt malts permits a singular act of injustice on the part of the Excise, as regards the drawback on exportation. By the Excise regulations, it is assumed that a quarter of malt will produce four barrels of ale brewed from wort of the sp. gr. 1·054, or 19·4lbs. per barrel; but, although this is hopeless even with pale malt, yet with an admixtnre of brown and black malt the assumption becomes absurd in the extreme. Admitting that, by good management, on the average, four barrels of wort, weighing 20lbs., can be obtained from one quarter of fine pale malt, yet, in the operations of cooling, fermenting, tunning, skimming, and cleansing, a loss of fully 10 per cent. occurs under the most vigilant superintendence; and, taking the great bulk of our metropolitan breweries, it would be nearer the truth to estimate this loss at 12 per cent. In plain words, 100 gallons of wort will not, by any management, produce more than about 88 gallons of saleable beer, though no allowance is made for this by the Excise; and the brewer who has paid duty upon 100 gallons gets a drawback upon but 88. This, however, is the most favourable view of the case; and we solicit attention to the force with which the argument returns in the instance of porter.

If a quarter of pale malt be assumed at 84lbs. of saccharine strength, then such an admixture of brown and black malt as is usually employed by brewers of porter will not give more than about 24lbs.; and as this constitutes at least one-fifth of the whole bulk used in porter brewing, we see that a quarter of such mixed malt can never give more than 70lbs.; that is to say, 80 parts of pale malt, mixed with 20 of brown and black, instead of giving at the rate of 84lbs., as pale malt alone does, would give but 70lbs., or produce a difference between the actual return and that taken for granted by the Excise authorities, of no less than 16·6 per cent.; to which, if we add the loss previously mentioned as arising from fermentation, yeast, &c., and which we have called 12 per cent., a total difference ensues of 28·6 per cent. between the duty paid by the brewer and the drawback allowed by act of parliament. But the grievance does not stop here; for the only return allowed by act of parliament is based upon the malt duty, and nothing whatever is said of the duty on hops. This, however, is at the rate of 19*s.* 7*d.* per cwt.; and since hops yield only about 35 per cent. of their weight of soluble matter, it would require 168lbs. of hops to produce a barrel of fluid or wort weighing 19·4 lbs., or having the requisite parliamentary specific gravity of

Digitized by Google

of 1·054. Upon this barrel, when exported, the drawback is 5*s.*; but, as may easily be seen on calculation, the duty paid by the brewer has been 29*s.* 3*d.* In fact, upon every 168 lbs. of hops consumed by the export brewer, he suffers a dead loss of 24*s.* 3*d.* independently of the waste incidental to his various processes. These things may seem startling; but the whole Board and Staff of the Excise are unable to prove that they are in the least over-estimated. At the same time the intelligent reader will gather that the profits of brewing are not by any means so large as a cursory glance at the subject might warrant: and we say this rather as having reference to schemes now in progress for reducing the price of beer than from its connection with our general arrangements. No doubt the brewing business is at times very remunerative; but a continued high price of the raw materials sometimes proves ruinous to the large brewer, as it must not be forgotten that the capital required is large, and invested in very perishable materials, such as casks and other wooden utensils, the wear and tear upon which is a very large item; nor, again, as we have shown, must a speculator begin by assuming, with the Excise authorities, that a quarter of malt will produce four barrels of beer, for he will be much nearer the truth if he estimates his saleable produce at three barrels. As, however, it forms no part of our present task to enter into the financial statistics of brewing, we return to the object more immediately in view, merely throwing out, *en passant*, the above hints for the benefit of those whom they may concern.

If the analyses of malt and malt-wort are requisite to enable the brewer to perform his operations with safety and success, the analysis of beer is not less indispensable to qualify him for the harassing labour of competition with his neighbours, and for the protection of his interest against Excise confiscation. Although beer may have been brewed of the requisite gravity for justifying a drawback on exportation, yet this is very far indeed from ensuring a return of the malt duty, even to the limited extent awarded by law. The question is, How are the Excise officials to know the real weight of the wort from which the beer was brewed? This may be ascertained by the following method, which should take the place of the present indefinite system:—Having agitated a portion of the ale or beer so as to dissipate its carbonic acid gas, measure out exactly 3600 grains'-measure of it, and pour these into a retort; then distil with great care into a receiver surrounded by ice-cold water about one-third of the whole fluid, or rather more than this if the ale or beer is known to be highly alcoholic. Next weigh the distilled fluid, and then ascertain its specific gravity, from whence, by any of the proper tables of *alcohol* (*which see*), the total quantity of absolute alcohol in the distilled fluid may be known. This alcohol is to be converted by calculation into its equivalent of sugar, at the rate of 171 parts of sugar for every 92 of alcohol found; after which the sugar must be brought into pounds per barrel by the rule before given, which is 52½ lbs. of sugar for every 20 lbs. of gravity. The amount of vinegar is next to be determined by any of the known forms of acidimetry. (See ACETIMETRY.) This vinegar, or acetic acid, must, like the alcohol, be also converted into its representative of sugar, by assigning 171 of sugar to every 102 of anhydrous acetic acid present in the beer, this sugar being, as before, converted into pounds per barrel. To the beer remaining in the retort, sufficient distilled water is then to be added, that the entire bulk of fluid may once more be equal to 3600 grains'-measure; and the temperature of the mixture having fallen to 60° F., its specific gravity must be determined in the usual way, and this reduced to pounds per barrel, by multiplying the excess above 1000 by 360, and dividing the product by 1000. The whole of these weights, added together, gives the original weight of the wort. Thus, for example, we will suppose that 3600 grains of a particular beer have given 1300 grains of a dilute alcohol, of specific gravity 0·9731, and consequently containing about 17¼ per cent. by weight of alcohol; again, that the same quantity of beer, when tested by ammonia, has indicated 30 grains of acetic acid; and lastly, that the spent wash, when filled up with distilled water to its primary bulk, has, at 60°, a specific gravity of 1·016; then the total alcohol would be in 360 grains, or the representative of a barrel, 22¾ grains, and the acetic acid in the same quantity, 3 grains: hence we have the following results:—

	Grs. of sugar.		Brewers' lbs.
Alcohol, 22¾ grains, equal to - -	42·2	or	16·
Acetic acid, 3 grains - - - -	5·	„	1·9
Spent wash, of specific gravity 1·016 -		„	5·76
Total weight - -			23·66

It might be thought that the proper kind of sugar to select in this instance as the representative of alcohol and acetic acid should be grape-sugar, whose atomic weight is 180; but it has been shown by Dr. Ure that the kind of sugar actually employed

Digitized by Google

in the construction of our saccharometer tables must have been cane-sugar, the atom of which is 171; and hence the reason why it must be employed in this calculation.

ALE, PALE OR BITTER; *brewed chiefly for the Indian market and for other tropical countries.*—It is a light beverage, with much aroma, and, in consequence of the regulations regarding the malt duty, is commonly brewed from a wort of specific gravity 1·055 or upwards; for no drawback is allowed by the Excise on the exportation of beer brewed from worts of a lower gravity than 1·054. This impolitic interference with the operations of trade compels the manufacturer of bitter beer to employ wort of a much greater density than he otherwise would do; for beer made from wort of the specific gravity 1·042 is not only better calculated to resist secondary fermentation and the other effects of a hot climate, but is also more pleasant and salubrious to the consumer. Under present circumstances the law expects the brewer of bitter beer to obtain four barrels of marketable beer from every quarter of malt he uses, which is just barely possible when the best malt of a good barley year is employed. With every quarter of such malt 16 lbs. of the best hops are used; so that, if we assume the cost of malt at 60*s.* per quarter, and the best hops at 2*s.* per lb., we shall have, for the prime cost of each barrel of bitter beer—in malt, 15*s.*; in hops, 8*s.*; together, 23*s.*; from which, on exportation, we must deduct the drawback of 5*s.* per barrel allowed by the Excise, which brings the prime cost down to 18*s.* per barrel, exclusive of the expense of manufacture, wear and tear of apparatus, capital invested in barrels, cooperage, &c., which constitute altogether a very formidable outlay. As, however, this ale is sold as high as from 50*s.* to 65*s.* per barrel, there can be no doubt that the bitter ale trade has long been, and still continues, an exceedingly profitable speculation, though somewhat hazardous, from the liability of the article to undergo decomposition ere it finds a market.

The East Indian pale ale, or bitter beer, is now brewed in large quantities for the home market at Burton-on-Trent, London, Glasgow, and Leeds, but differs slightly from that exported, as being less bitter and more spirituous. It is brewed solely from the best and palest malts and the finest and most delicate hop, and much of its success depends on the care taken in selecting the best materials for its composition. It also requires the utmost care and attention at every stage of its progress to preserve the colour, taste, and other properties of this ale in their fulness and purity.

For further description of the brewhouse and its appliances, with the various modes of operations, see the article BREWING.

The English ale-bibbers were a few years since startled by a public report, apparently well authenticated, that the French chemists were largely engaged in preparing immense quantities of that most deadly poison *strychnine* for the purpose of drugging the pale bitter ale, in such great vogue at present in Great Britain and its colonies. The following are a few amongst many reasons which might be quoted, to show the absurdity of this report:—1, Strychnine is an exceedingly costly article; 2, It has a most unpleasant metallic bitter taste; 3, It is a notorious poison, and by its use in any brewery would ruin the reputation of the brewer; 4, It cannot be introduced into ordinary beer brewed with hops, because it is entirely precipitated by infusions of that wholesome fragrant herb. In fact, the quercitannic acid of hops is incompatible with strychnia and all its kindred alkaloids. Hence hopped beer becomes in this respect a sanitary beverage, refusing to take up a particle of strychnia and other noxious drugs of like character. Were the *nux vomica* powder, from which strychnia is extracted, even stealthily thrown into the mash tun, its dangerous principle would be all infallibly thrown down with the grounds in the subsequent boiling with the hops.

The varieties of beer depend either upon the difference of their materials, or from a different management of the brewing processes. With regard to the materials, beers differ in the proportion of their malt, hops, and water, and in the different kinds of malt or other grain. To the class of table or small beers, all those sorts may be referred whose specific gravity does not exceed 1·025, which contain about 5 per cent. of malt extract, or nearly 18 lbs. per barrel. Beers of middling strength may be reckoned those between the density of 1·025 and 1·040, which contain, at the average, 7 per cent., or 25 lbs. per barrel. The latter may be made with 400 quarters of malt to 1500 barrels of beer: stronger beers have a specific gravity of from 1·050 to 1·080, and take from 450 to 750 quarters of malt to the same quantity of beer. The strongest beer found in the market is some of the English and Scotch ales, for which from 18 to 27 quarters of malt are taken for 1500 gallons of beer: good porter requires from 16 to 18 quarters for that quantity. Beers are sometimes made with the addition of other farinaceous matter to the malt; but when the latter constitutes the main portion of the grain, the malting of the other kinds of corn becomes unnecessary, for the diastase of the barley-malt changes the starch into sugar during the mashing operation. Even with entirely raw grain, beer is made in some parts of the Continent, the brewers trusting the conversion of the starch into sugar to the

Digitized by Google

action of the gluten alone, at a low mashing temperature, on the principle of Saussure's and Kirchoff's researches.

The colour of the beer depends upon the colour of the malt and the duration of the boil in the copper. The pale ale is made, as we have stated, from steam- or sun-dried malt and the young shoots of the hop; the deep-yellow ale from a mixture of pale-yellow and brown malt; and the dark-brown beer from well-kilned and partly-carbonised malt, mixed with a good deal of the pale to give body. The longer and more strongly heated the malt has been in the kiln, the less weight of extract, *cæteris paribus*, does it afford. In making the fine mild ales, high temperatures ought to be avoided, and the yeast ought to be skimmed off, or allowed to flow very readily from its top, by means of the cleansing-butt system, so that little ferment being left in it to decompose the rest of the sugar, the sweetness may remain unimpaired. With regard to porter, in certain breweries each of the three kinds of malt employed for it is separately mashed, after which the first and the half of the second wort is boiled along with the whole of the hops, and thence cooled, and set to ferment in the gyle-tun. The third-drawn wort, with the remaining half of the second, is then boiled with the same hops, saved by the drainer, and, after cooling, added to the former in the gyle-tun, when the two must be well roused together.

It is obvious from the preceding development of principles, that all amylaceous and saccharine materials, such as potatoes, beans, turnips, as well as cane and starch syrup, molasses, &c., may be used in brewing beer. When, however, a superior quality of brown beer is desired, malted barley is indispensable, and even with these substitutes a mixture of it is most advantageous. The washed roots of the common carrot, of the red and yellow beet, or of the potato, must be first boiled in water, and then mashed into a pulp. This pulp must be mixed with water in the copper along with wheaten or oatmeal and the proper quantity of hops, then boiled during eight or nine hours. This wort is to be cooled in the usual way, and fermented with the addition of yeast. A much better process is that now practised on a considerable scale at Strasbourg, in making the ale for which that city is celebrated. The mashed potatoes are mixed with from a twentieth to a tenth of their weight of finely-ground barley-malt and some water. The mixture is exposed in a water-bath to a heat of 160° F. for four hours, whereby it passes into a saccharine state, and may then be boiled with hops, cooled, and properly fermented into good beer.

Maize, or Indian corn, has also been employed to make beer; but its malting is somewhat difficult, on account of the rapidity and vigour with which its radicles and plumula sprout forth. The proper mode of causing it to germinate is to cover it a few inches deep with common soil, in a garden or field, and to leave it there till the bed is covered with green shoots of the plant. The corn must be then lifted, washed, and exposed to the kiln.

The Board of Excise, or Inland Revenue, having, a few years ago, with delusive liberality, been permitted by the Legislature to grant leave to use sugar in the place of barley-malt in breweries, an extensive sugar merchant in London hoping, under this pretended boon, to acquire a new and wealthy class of customers, employed Dr. Ure to ascertain by experiment the relative values of malt and sugar for the manufacture of beer. Ten samples of Muscovado sugar, of several qualities, were examined, and were found to vary very slightly in the proportions of alcohol they could furnish by fermentation in a brewer's tun, the average being 12 gallons of proof spirit for 112 lbs. of the sugar; whereas an equal quantity of proof spirit could be obtained from $4\frac{4}{10}$ bushels of malt. One pound of malt yields $\frac{3}{4}$ lb. of extract capable of making as much beer as that weight of sugar. On comparing the actual price of sugar and malt, we shall see how ruinous a business it would be to use sugar instead of malt in a brewery, and hence the delusiveness of the Excise generosity towards the beer trade.

Although the object of the brewer is not the formation of a mere saccharine wort, as we have already shown (and malt contains other substances necessary to the formation of a sound beer), the amount of proof spirit producible from various substances will be some index to their relative value; and it has been found that, with proper management, a quarter of good malt, weighing 42 lbs. per bushel, or 336 lbs. per quarter, will yield 18 gallons of proof spirit; a quarter of barley, weighing 55 lbs. per bushel, or 440 lbs. per quarter, will yield from 18 to 20 gallons. An equal quantity of spirit, say 18 gallons at proof, can be obtained from 175 lbs. of best West India sugar; from 234 lbs. of inferior Jamaica raw sugar; from 275 lbs. of West India molasses; or from 295 lbs of refined or sugar-house molasses. Bauerstock gave the average of sugar 200 lbs., and of honey 226 lbs., as equivalent to a quarter of malt.

Ropiness is a morbid state of beer, which is best remedied, according to Mr. Black, by putting the beer into a vat with a false bottom, and adding, per barrel, 4 or 5

Digitized by Google

pounds of hops, taken away after the first boilings of the worts; and to them may be added about half a pound per barrel of mustard-seed. Rouse the beer as the hops are gradually introduced, and, in some months, the ropiness will be perfectly cured. The beer should be drawn off from below the false bottom.

For theoretical views, see FERMENTATION; and for wort-cooling apparatus, see REFRIGERATOR.

BEER, BAVARIAN. The Germans from time immemorial have been habitually beer drinkers, and have exercised much of their technical and scientific skill in the production of beer of many different kinds, some of which are little known to our nation, while one at least, called Bavarian, possesses excellent qualities, entitling it to the attention of all brewers and consumers of this beverage. The peculiarities in the manufacture of Bavarian beer have recently attracted the attention of the most eminent chemists in Germany, especially of Professor Liebig, and much new light has thereby been thrown upon this curious portion of vegetable chemistry.

The following is a list of the principal beers at present brewed in Germany:—

1. Brown beer of Merseburg; of pure barley malt.
2. „ „ „ and beet-root sugar.
3. „ barley malt, potatoes, and beet-root syrup.
4. „ refined beet-root syrup alone.
5. Covent, or thin beer.
6. Berlin white beer, or the Champagne of the north.
7. Broyhan, a famous Hanoverian beer.
8. Double beer of Grünthal.
9. Bavarian beer: 1. Summer beer; 2. Winter beer.
10. „ Bock-beer.
11. Wheat *Lager*-beer (slowly fermented).
12. White bitter beer of Erlangen.

Considerable interest among men of science, in favour of the Bavarian beer process, has been excited ever since the appearance of "Liebig's Organic Chemistry." In the introduction to this admirable work, he says, "The beers of England and France, and for the most part those of Germany, become gradually sour by contact of air. This defect does not belong to the beers of Bavaria, which may be preserved at pleasure in half-full casks, as well as full ones, without alteration in the air. This precious quality must be ascribed to a peculiar process employed for fermenting the wort, called in German *Untergährung*, or fermentation from below; which has solved one of the finest theoretical problems.

"Wort is proportionally richer in soluble gluten than in sugar. When it is set to ferment by the ordinary process, it evolves a large quantity of yeast, in the state of a thick froth, with bubbles of carbonic acid gas attached to it, whereby it is floated to the surface of the liquid. The phenomenon is easily explained. In the body of the wort, alongside of particles of sugar decomposing, there are particles of gluten being oxidised at the same time, and enveloping, as it were, the former particles, whence the carbonic acid of the sugar and the insoluble ferment from the gluten being simultaneously produced, should mutually adhere. When the metamorphosis of the sugar is completed, there remains still a large quantity of gluten dissolved in the fermented liquor, which gluten, in virtue of its tendency to appropriate oxygen, and to get decomposed, induces also the transformation of the alcohol into acetic acid (vinegar). But were all the matters susceptible of oxidisement as well as this vinegar ferment removed, the beer would thereby lose its faculty of becoming sour. These conditions are duly fulfilled in the process followed in Bavaria.

"In that country the malt-wort is set to ferment in open backs, with an extensive surface, and placed in cool cellars, having an atmospheric temperature not exceeding 8° or 10° C. (46½° or 50° F.) The operation lasts from 3 to 4 weeks; the carbonic acid is disengaged, not in large bubbles that burst on the surface of the liquid, but in very small vesicles, like those of a mineral water, or of a liquor saturated with carbonic acid, when the pressure is removed. The surface of the fermenting wort is always in contact with the oxygen of the atmosphere, as it is hardly covered with froth, and as all the yeast is deposited at the bottom of the back under the form of a very viscid sediment, called in German *Unterhefe*.

"In order to form an exact idea of the difference between the two processes of fermentation, it must be borne in mind that the metamorphosis of gluten, and of azotised bodies in general, is accomplished successively in two principal periods, and that it is in the *first* that the gluten is transformed in the interior of the liquid into an insoluble ferment, and that it separates alongside of the carbonic acid proceeding from the

Digitized by Google

sugar. This separation is the consequence of an absorption of oxygen. It is, however, hardly possible to decide if this oxygen comes from the sugar, from the water, or even from an intestine change of the gluten itself; or, in other words, whether the oxygen combines directly with the gluten, to give it a higher degree of oxidation, or whether it lays hold of its hydrogen to form water.

"This oxidation of the gluten, from whichever cause, and the transformation of the sugar into carbonic acid and alcohol, are two actions so correlated, that by an exclusion of the one, the other is immediately stopped."

The *superficial* ferment (*Oberhefe* in German) which covers the surface of the fermenting works, is gluten oxidised in a state of putrefaction; and the ferment of *deposit* is the gluten oxidised in a state of *érémacausis*.

The surface yeast, or barm, excites in liquids containing sugar and gluten the same alteration which itself is undergoing, whereby the sugar and the gluten suffer a rapid and tumultuous metamorphosis. We may form an exact idea of the different states of these two kinds of yeast by comparing the *superficial* to vegetable matters putrefying at the bottom of a marsh, and the *bottom* yeast to the rotting of wood in a state of *érémacausis*, that is, of slow combustion. The peculiar condition of the elements of the *sediment* ferment causes them to act upon the elements of the sugar in an extremely slow manner, and excites the change into alcohol and carbonic acid, without that of the dissolved gluten.

If to wort at a temperature of from 46½° to 50° F. the top yeast be added, a quiet slow fermentation is produced, but one accompanied with a rising up of the mass, while yeast collects both at the surface and bottom of the backs. If this deposit be removed to make use of it in other operations, it acquires by little and little the characters of the *Unterhefe*, and becomes incapable of exciting the phenomena of the first fermenting period, causing only, at 59° F., those of the second, namely, sedimentary fermentation. It must be carefully observed that the right *Unterhefe* is not the precipitate which falls to the bottom of backs in the ordinary fermentation of beer, but is a matter entirely different. Peculiar pains must be taken to get it genuine, and in a proper condition at the commencement. Hence the brewers of Hesse and Prussia, who wished to make Bavarian beer, found it more to their interest to send for the article to Wurtsburg, or Bamberg, in Bavaria, than to prepare it themselves. When once the due primary fermentation has been established and well regulated in a brewery, abundance of the true *Unterhefe* may be obtained for all future operations.

In a wort made to ferment at a low temperature with deposit only, the presence of the *Unterhefe* is the first condition essential to the metamorphosis of the *saccharum*, but it is not competent to bring about the oxidation of the gluten dissolved in the wort, and its transformation into an insoluble state. This change must be accomplished at the cost of the atmospherical oxygen.

In the tendency of soluble gluten to absorb oxygen, and in the free access of the air, all the conditions necessary for its *érémacausis* are to be found. It is known that the presence of oxygen and soluble gluten are also the conditions of acetification (vinegar making), but they are not the only ones; for this process requires a temperature of a certain elevation for the alcohol to experience this slow combustion. Hence, by excluding that temperature, the combustion (oxidation) of alcohol is obstructed, while the gluten alone combines with the oxygen of the air. This property does not belong to alcohol at a low temperature, so that during the oxidation in this case of the gluten, the alcohol exists alongside of it, in the same condition as the gluten alongside of sulphurous acid in the *muted* wines. In wines not impregnated with the fumes of burning sulphur, the oxygen which would have combined at the same time with the gluten and the alcohol does not seize either of them in wines which have been subjected to *mutism*, but it unites itself to the sulphurous acid to convert it into the sulphuric. The action called *sedimentary* fermentation is therefore merely a simultaneous metamorphosis of putrefaction and slow combustion; the sugar and the *Unterhefe* putrefy, and the soluble gluten gets oxidised, not at the expense of the oxygen of the water and the sugar, but of the oxygen of the air, and the gluten then falls in the insoluble state. The process of Appert for the preservation of provisions is founded upon the same principle as the Bavarian process of fermentation, in which all the putrescible matters are separated by the intervention of the air at a temperature too low for the alcohol to become oxidised. By removing them in this way, the tendency of the beer to grow sour, or to suffer a further change, is prevented. Appert's method consists in placing, in presence of vegetables or meat which we wish to preserve, the oxygen at a high temperature, so as to produce slow combustion, but without putrefaction or even fermentation. By removing the residuary oxygen after the combustion is finished, all the causes of an ulterior change are removed. In the sedimentary fermentation of beer, we remove the matter which *experiences* the com-

Digitized by Google

bustion; whereas, on the contrary, in the method of Appert, we remove that which *produces* it.

The temperature at which fermentation is carried on has a very marked influence upon the quantity of alcohol produced. It is known that the juice of beets set to ferment between 86° and 95° F. does not yield alcohol, and its sugar is replaced by a less oxygenated substance, *mannite*, and lactic acid, resulting from the mucilage. In proportion as the temperature is lowered the mannite fermentation diminishes. As to azotised juices, however, it is hardly possible to define the conditions under which the transformation of the sugar will take place, without being accompanied with another decomposition which modifies its products. The fermentation of beer by *deposit* demonstrates that by the simultaneous action of the oxygen of the air and a low temperature, the metamorphosis of sugar is effected in a complete manner; for the vessels in which the operation is carried on are so disposed that the oxygen of the air may act upon a surface great enough to transform all the gluten into insoluble yeast, and thus to present to the sugar a matter constantly undergoing decomposition. The oxidisement of the dissolved gluten goes on, but that of the alcohol requires a higher temperature, whence it cannot suffer acetification, or conversion into vinegar.

In several states of the German confederation, the favourable influence of a rational process of fermentation upon the quality of the beers has been fully recognised. In the Grand Duchy of Hesse considerable premiums were proposed for the brewing of beer according to the process pursued in Bavaria, which were decreed to those brewers who were able to prove that their product (neither strong nor highly hopped) had kept six months in the casks without becoming at all sour. When the first trials were being made, several thousand barrels were being spoiled, till eventually experience led to the discovery of the true practical conditions which theory had foreseen and prescribed.

Neither the richness in alcohol, nor in hops, nor both combined, can hinder ordinary beer from getting tart. In England, says Liebig, an immense capital is sacrificed to preserve the better sorts of ale and porter from souring, by leaving them for several years in enormous tuns quite full, and very well closed, while their tops are covered with sand. This treatment is identical with that applied to wines to make them deposit the wine-stone. A slight transpiration of air goes on in this case through the pores of the wood; but the quantity of azotised matter contained in the beer is so great, relatively to the proportion of oxygen admitted, that this element cannot act upon the alcohol. And yet the beer thus managed will not keep sweet more than two months in smaller casks, to which air has access. The grand secret of the Munich brewers is to conduct the fermentation of the wort at too low a temperature to permit of the acetification of the alcohol, and to cause all the azotised matters to be completely separated by the intervention of the oxygen of the air, and not by the sacrifice of the sugar. It is only in March and October that the good store beer is begun to be made in Bavaria.

The following Table exhibits the results of the chemical examination of the undermentioned kinds of Beer:—

Name of the Beer.	Quantity in 100 parts by weight.				Analyst.
	Water.	Malt extr.	Alcohol.	Carb. acid.	
Augustine double beer — Munich	88·36	8·0	3·6	0·14	Kaiser.
Salvator beer — do. - - -	87·62	8·0	4·2	0·18	Do.
Bock beer from the Royal Brewery — do.	88·64	7·2	4·0	0·16	Do.
Shenck (pot) beer, from a Bavarian country brewery; a kind small beer.	92·94	4·0	2·9	0·16	Do.
Bock beer, of Brunswick, of the Bavarian kind.	88·50	6·50	5·0	- -	Balhorn.
Lager (store) beer, of Brunswick, of the Bavarian kind.	91·0	5·4	3·50	- -	Otto.
Brunswick sweet small beer -	84·70	14·0	1 30	- -	Do.
Brunswick mum - - -	59·2	39·0	1·80	0·1	Kaiser.

Malting in Munich.—The barley is steeped till the acrospire, embryo, or seed-germ, seems to be quickened, a circumstance denoted by a swelling at that end of the grain which was attached to the foot-stalk, as also when, on pressing a pile between two fingers against the thumb nail, a slight projection of the embryo is perceptible. As

Digitized by Google

long, however, as the seed-germ sticks too firm to the husk, it has not been steeped enough for exposure on the under-ground malt-floor. Nor can deficient steeping be safely made up for afterwards by sprinkling the malt-couch with a watering-can, which is apt to render the malting irregular. The steep-water should be changed repeatedly, according to the degree of foulness and hardness of the barley; first, six hours after immersion, having previously stirred the whole mass several times; afterwards, in winter every 24 hours, but in summer every 12 hours. It loses none of its substance in this way, whatever vulgar prejudice may think to the contrary. After letting off the last water from the stone cistern, the Bavarians leave the barley to drain in it during four or six hours. It is now taken out, and laid on the couch floor in a square heap, eight or ten inches high, and it is turned over, morning and evening, with dexterity, so as to throw the middle portion upon the top and bottom of the new-made couch. When the acrospire has become as long as the grain itself, the malt is carried to the *withering* (*Welkboden*) or drying floor, in the open air, where it is exposed (in dry weather) during from eight to fourteen days, being daily turned over three times with a winnowing shovel. It is next dried on a well-constructed cylinder or flue-heated malt-kiln, at a gentle clear heat, without being browned in the slightest degree, while it turns friable into a fine white meal. Smoked malt is entirely rejected by the best Bavarian brewers. Their malt is dried on a series of wove wire horizontal shelves, placed over each other, up through whose interstices, or perforations, streams of air, heated to only 122° F., rise, from the surfaces of rows of hot sheet-iron pipe-flues, arranged a little way below the shelves. Into these pipes the smoke and burned air of a little furnace on the ground are admitted. The whole is enclosed in a vaulted chamber, from whose top a large wooden pipe issues for conveying away the steam from the drying malt. Each charge of malt may be completely dried on this kiln in the space of from 18 to 24 hours, by a gentle uniform heat, which does not injure the diastase or discolour the farina.

The malt for store beer should be kept three months at least before using it, and be freed by rubbing and sifting from the acrospires before being sent to the mill, where it should be crushed pretty fine. The barley employed is the best *distichon* or common kind, styled *Hordeum vulgare*.

The hops are of the best and freshest growth of Bavaria, called the fine *spalter*, or *saatser Bohemian townhops*, and are twice as dear as the best ordinary hops of the rest of Germany. They are in such esteem as to be exported even into France.

In Munich the malt is moistened slightly 12 or 16 hours before crushing it, with from two to three *Maas** of water for every bushel, the malt being well dried, and several months old. The mash-tun into which the malt is immediately conveyed is, in middle-sized breweries, a round oaken tub, about 4½ feet deep, 10 feet in diameter at bottom and 9 at top, outside measure, containing about 6000 Berlin quarts. Into this tun cold water is admitted late in the evening, to the amount of 25 quarts for each *scheffel*, or 600 quarts for the 26 *scheffels* of the ground malt, which are then shot in and stirred about, and worked well about with the oars and rakes, till a uniform paste is formed without lumps. It is left thus for three or four hours; 3000 quarts of water being put into the copper and made to boil; and 1800 quarts are gradually run down into the mash-tun and worked about in it, producing a mean temperature of 142·5 F. After an hour's interval, during which the copper has been kept full, 1800 additional quarts of water are run into the tun, with suitable mashing. The copper being now emptied of water, the mash-mixture from the tun is transferred to it, and brought quickly to the boiling point, with careful stirring to prevent its settling on the bottom and getting burned, and it is kept at that temperature for half an hour. When the mash rises by the ebullition, it needs no more stirring. This process is called, in Bavaria, boiling the thick mash, *dickmaisch Kochen*. The mash is next returned to the tun, and well worked about in it. A few barrels of a thin mash-wort are kept ready to be put into the copper the moment it is emptied of the thick mash. After a quarter of an hour's repose the portion of liquid filtered through the sieve part of the bottom of the tun into the wort-cistern is put into the copper, thrown back boiling hot into the mash in the tun, which is once more worked thoroughly.

The copper is next cleared out, filled up with water, which is made to boil for the after, or small-beer, brewing. After two hours' settling in the open tun, the worts are drawn off clear.

Into the copper, filled up one foot high with the wort, the hops are introduced, and the mixture is made to boil during a quarter of an hour. This is called *roasting the hops*. The rest of the wort is now put into the copper, and boiled along with the hops during at least an hour or an hour and a half. The mixture is then laded out through the hop-filter into the cooling cistern, where it stands three or four inches deep, and

* A Bavarian *maas* = 1¼ quarts English measure.

Digitized by Google

is exposed upon an extensive surface to natural or artificial currents of cold air, so as to be quickly cooled. For every 20 barrels of *Lagerbier* there are allowed 10 of small beer; so that 30 barrels of wort are made in all.

For the winter or pot beer the worts are brought down to about 59° F. in the cooler, and the beer is to be transferred to the fermenting tuns at from 54·5° to 59° F.; for the summer or *Lagerbier*, the worts must be brought down in the cooler to from 43° to 45½°, and put into the fermenting tuns at from 41° to 43° F.

A few hours beforehand, while the wort is still at the temperature of 63½° F., a quantity of *lobb* must be made, called *Vorstellen* (*fore-setting*) in German, by mixing the proportion of *Unterhefe* (yeast) intended for the whole brewing with a barrel or a barrel and a half of the worts, in a small tub called the *Gähr-tiene*, stirring them well together, so that they may immediately run into fermentation. This *lobb* is in this state to be added to the worts. The *lobb* is known to be ready when it is covered with a white froth from one quarter to one half an inch thick, during which it must be well covered up. The large fermenting tun must in like manner be kept covered, even in the vault. The colder the worts, the more yeast must be used. For the above quantity, at

From 57° to 59° F.	- - - -	6	*Maas of Unterhefe.*
„ 53° to 55°	- - - -	8	„ „
„ 48° to 50°	- - - -	10	„ „
„ 41° to 43°	- - - -	12	„ „

Some recommend that wort for this kind of fermentation (the *Untergährung*) should be set with the yeast at from 48° to 57°; but the general practice at Munich is to set the summer or *Lagerbier* at from 41° to 43° F.

By following the preceding directions, the wort in the tun should, in the course of from 12 to 24 hours, exhibit a white froth round the rim, and even a slight whiteness in the middle. After another 12 to 24 hours, the froth should appear in curls; and, in a third like period, these curls should be changed into a still higher frothy brownish mass. In from 24 to 48 hours more, the barm should have fallen down in portions through the beer, so as to allow it to be seen in certain points. In this case it may be turned over into the smaller ripening tuns in the course of other five or six days. But when the worts have been set to ferment at from 41° to 43° F., they require from eight to nine days. The beer is transferred, after being freed from the top yeast by a skimmer, by means of the stopcock near the bottom of the large tun. It is either first run into an intermediate vessel, in order that the top and bottom portions may be well mixed, or into each of the *Lager* casks, in a numbered series, like quantities of the top and bottom portions are introduced. In the ripening cellars the temperature cannot be too low. The best keeping beer can never be brewed unless the temperature of the worts at setting, and of course the fermenting vault, be as low as 50° F. In Bavaria, where this manufacture is carried on under government inspectors, a brewing period is prescribed by law, which is, for the under fermenting *Lagerbier*, from Michaelmas (29th September) to St. George (23rd April). From the latter to the former period the ordinary top-barm beer alone is to be made. The ripening casks must not be quite full, and they are to be closed merely with a loose bung, in order to allow of the working over of the ferment. But should the fermentation appear too languid, after six or eight days, a little briskly fermenting *Lagerbier* may be introduced. The *store Lagerbier* tuns are not to be quite filled, so as to prevent all the yeasty particles from being discharged in the ripening fermentation; but the *pot Lagerbier* tuns must be made quite full, as this beverage is intended for speedy sale within a few weeks of its being made.

As soon as the summer-beer vaults are charged with their ripening casks and with ice-cold air, they are closed air-tight with triple doors, having small intervals between, so that one may be entered and shut again before the next is opened. These vaults are sometimes made in ranges radiating from a centre, and at others in rooms set off at right angles to a main gallery, so that in either case, when the external opening is well secured with triple air-tight doors, it may be entered at any time, in order to inspect the interior without the admission of warm air to the beer-barrels. The wooden bungs for loosely stopping them must be coated with the proper pitch, to prevent the possibility of their imparting any acetous ferment.

Their government has taken great pains to improve this national beverage, by encouraging the growth of the best qualities of hops and barley. The vaults in which the beer is fermented, ripened, and kept, are all under ground, and mostly in stony excavations called *Felsenkeller*, or rock-cellars. The beer is divided into two sorts, called *summer* and *winter*. The latter is light, and, being intended for immediate retail in tankards, is termed *Schankbier*. The other, or the *Lagerbier*, very sensibly increases

Digitized by Google

in vinous strength in proportion as it decreases in sweetness, by the judicious management of the *Nachgährung*, or fermentation in the casks. In several parts of Germany a keeping quality is communicated to beers by burning sulphur in the casks before filling them, or by the introduction of sulphite of lime; but the flavour thus imparted is disliked in Munich, Bayreuth, Regensburg, Nürnberg, Hof, and the other chief towns of Bavaria, instead of which a preservative virtue is sought for in an aromatic mineral, or Tyrol *pitch*, with which the inside of the casks are carefully coated, and in which the ripe beer is kept and exported. In December and January, after the casks are charged with the summer or store beer, the double doors of the cellars are closed, and lumps of ice are piled up against them, to prevent all access of warm air. The cellar is not opened till next August, in order to take out the beer for consumption. In these circumstances the beer becomes transparent like champagne wine; and, since but little carbonic acid gas has been disengaged, little or none of the additionally generated alcohol is lost by evaporation.

The winter or shank (pot) beer is brewed in the months of October, November, March, and April; but the summer or store-beer in December, January, and February, or the period of the coldest weather. For the former beer, the hopped worts are cooled down only to from 51° to 55°, but for the latter to from 41° to 42½° F. The winter beer is also a little weaker than the summer beer, being intended to be sooner consumed; since four bushels* (Berlin measure) of fine, dry, sifted malt, of large heavy *Hordeum vulgare distichon*, affords seven *Eimers* of winter beer, but not more than from five and a half to six of summer beer.† At the second infusion of the worts small beer is obtained to the amount of 20 quarts for the above quantity of malt. For the above quantity of winter beer, 6 lbs. of middling hops are reckoned sufficient; but for the summer beer, from 7 to 8 lbs. of the finest hops. The winter beer may be sent out to the publicans in barrels five days after the fermentation has been completed in the tuns, and, though not quite clear, it will become so in the course of six days; yet they generally do not serve it out in pots for two or three weeks; but the summer beer must be perfectly bright and still before it is racked off into casks for sale.

Bock Beer of Bavaria. — This is a favourite double-strong beverage of the best *lager* description, which is so named from causing its consumers to prance and tumble about like a buck or a goat; — for the German word *Bock* has both these meanings. It is merely a beer having a specific gravity one-third greater, and is therefore made with a third greater proportion of malt, but with the same proportion of hops, and flavoured with a few coriander seeds. It has a somewhat darker colour than the general *Lagerbier*, occasionally brownish, tastes less bitter on account of the predominating malt, and is somewhat aromatic. It is an eminently intoxicating beverage. It is brewed in December and January, and takes a long time to ferment and ripen; but still it contains too large a quantity of unchanged saccharine matter and *dextrine* for its hops, so that it tastes too luscious for habitual topers, and is drunk only from the beginning of May till the end of July, when the fashion and appetite for it are over for the year.

Zimmermann assumes the merit of having introduced Carrageen moss as a clarifier into the beer manufacture. He says that 1 ounce of it is sufficient for 25 gallons of beer; and that it operates, not only in the act of boiling with the hops, but in that of cooling, as also in the squares and backs before the fermentation has begun. Whenever this change, however, takes place, the commixture throws up the gluten and moss to the surface of the liquid in a black scum, which is to be skimmed off, so that the proper yeast may not be soiled with it. It occasions the separation of much of the vegetable slime, or mucilage, called by the German brewers *Pech* (pitch).

On the Clarifying or Clearing of Beers.—Clarifiers act either chemically,—by being soluble in the beer, and by forming an insoluble compound with a vegetable gluten, and other viscid vegetable extracts; gelatine and albumen, under one shape or other, have been most used; the former for beer, the latter, as white of egg, for wine, — or mechanically, by being diffused in fine particles through the turbid liquor, and, in their precipitation carrying down with them the floating vegetable matters. To this class belong sand, bone-black (in some measure, but not entirely), and other such articles. The latter means are very imperfect, and can take down only such matters as exist already in an insoluble state; of the former class, milk, blood, glue, calves'-feet jelly, hartshorn shavings, and isinglass, have been chiefly recommended. Calves'-feet jelly is much used in many parts of Germany, where veal forms so common a kind of butcher-meat; but in summer it is apt to acquire a putrid taint, and to impart the same to the beer. In these islands, isinglass swollen and partly dissolved in vinegar,

* An English quarter of grain is equal to 5 bushels (*schcffel*) and nearly one-third Prussian measure.
† 1 Eimer Prussian = 15¼ English Imperial gallons; 1 Munich *schcffel* is equal to 4 Berlin *schcffels*; 1 Lib. Munich = 1·235 *Eng. lbs. Avoird.*; 1 Lib. Berlin = 1·031 *lbs. Avoird.*

Digitized by Google

or sour beer, is almost the sole clarifier, called finings, employed. It is costly, when the best article is used; but an inferior kind of isinglass is imported for the brewers.

The solvent or medium through or with which it is administered is eminently injudicious, as it never fails to infect the beer with an acetous ferment. In Germany their tart wine has been used hitherto for dissolving the isinglass; and this has also the same bad property. Mr. Zimmermann professes to have discovered an unexceptionable solvent in tartaric acid, one pound of which dissolved in 24 quarts of water is capable of dissolving two pounds of ordinary isinglass; forming finings which may be afterwards diluted with pure water at pleasure. Such isinglass imported from Petersburg into Berlin costs there only 3*s*. per lb. These finings are best added, as already mentioned, to the worts prior to fermentation, as soon as they are let into the setting-back, or tun, immediately after adding the yeast to it. They are best administered by mixing them in a small tub with thrice their volume of wort, raising the mixture into a froth with a whisk (*twig-besom* in German), and then stirring it into the worts. The clarification becomes manifest in the course of a few hours, and when the fermentation is completed, the beer will be as brilliant as can be wished; the test of which with the German topers is when they can read a newspaper while a tall glass beaker of beer is placed between the paper and the candle. One quart of finings of the above strength will be generally found adequate to the clearing of 100 gallons of well-brewed lager-beer, though it will be surer to use double that proportion of finings. The Carrageen moss, as finings, is to be cut in fine shreds, thrown into the boiling thin wort, when the flocks begin to separate, and before adding the hops; after which the boiling is continued for an hour and a half or two hours, as need be. The clarifying with this kind of finings takes place in the cooler, so that a limpid wort may be drawn off into the fermenting back.

Berlin White or Pale Beer (*Weiss-bier*).—This is the truly national beverage of Prussia Proper. It is brewed from 1 part of barley malt and 5 parts of wheat malt, mingled, moistened, and coarsely crushed between rollers. This mixture is worked up first with water at 95° F., in the proportion of 30 quarts per *scheffel* of the malt, to which pasty mixture 70 quarts of boiling water are forthwith added, and the whole is mashed in the tun. After it has been left here a little to settle, a portion of the thin liquor is drawn off by the tap, transferred to the copper, and then for each bushel of malt there is added to it a decoction of half a pound of *Altmark* hops separately prepared. This hopped wort, after half an hour's boiling, is turned back with the hops into the mash-tun, of which the temperature should now be 162½° F., but not more. In half an hour the wort is to be drawn off from the grains, and pumped into the cooler. The grains are afterwards mashed with from 40 to 50 quarts of boiling water per *scheffel* of malt, and this infusion is drawn off and added to the former worts. The whole mixture is set at 66° F., with a due proportion of top yeast or ordinary barm, and very moderately fermented.

Potato Beer.—The potatoes being well washed are to be rubbed down to a pulp by such a grating cylinder machine as is represented in *fig.* 157 (p. 290), where *a* is the hopper for receiving the roots (whether potato or beet, as in the French sugar factories); *b* is the crushing and grinding drum; *c*, the handle for turning the spur-wheel *d*, which drives the pinion *e*, and the fly-wheel *f*; *g*, *h*, is the frame. The dotted lines above *e* are the colander through which the pulp passes. For every *scheffel* of potatoes 80 quarts of water are to be put with them into the copper, and made to boil.

Crushed malt, to the amount of 12 *scheffels*, is to be well worked about in the mash-tun with 360 quarts, or 90 gallons (English), of cold water, to a thick pap, and then 840 additional quarts, or about 6 barrels (English), of cold water are to be successively introduced with constant stirring, and left to stand an hour at rest.

The potatoes having been meanwhile boiled to a fine starch paste, the whole malt-mash, thin and thick, is to be speedily laded into the copper, and the mixture in it is to be well stirred for an hour, taking care to keep the temperature at from 144° to 156° F. all the time, in order that the *diastase* of the malt may convert the starch present in the two substances into sugar and dextrine. This transformation is made manifest by the white pasty liquid becoming transparent and thin. Whenever this happens the fire is to be raised, to make the mash boil, and to keep it at this heat for 10 minutes. The fire is then withdrawn, the contents of the copper are to be transferred into the mash, worked well there, and left to settle for half an hour; during which time the copper is to be washed out, and quickly charged once more with boiling water.

The clear wort is to be drawn off from the tun, as usual, and boiled as soon as possible with the due proportion of hops; and the boiling water may be added in any desired quantity to the drained mash, for the second mashing. Wort made in this way is said to have no flavour whatever of the potato, and to clarify more easily

Digitized by Google

than malt-wort, from its containing a smaller proportion of gluten relatively to that of saccharum.

157

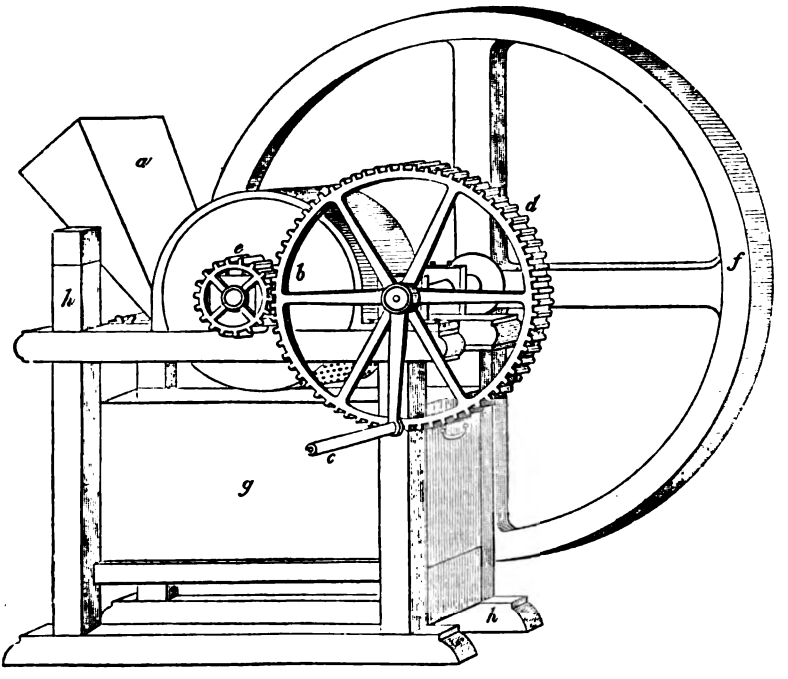

A *scheffel* of good mealy potatoes affords from 26 to 27½ lbs. of thick well-boiled syrup, of the density of 36° Baumé (see AREOMETER); and 26 lbs. of such syrup are equivalent to a *scheffel* of malt in saccharine strength. Zimmermann thinks beer so brewed from potatoes quite equal, at least, if not superior, to pure malt beer, both in appearance and quality.

Fig. 158 is the stopcock used in Bavaria for bottling beer.

158

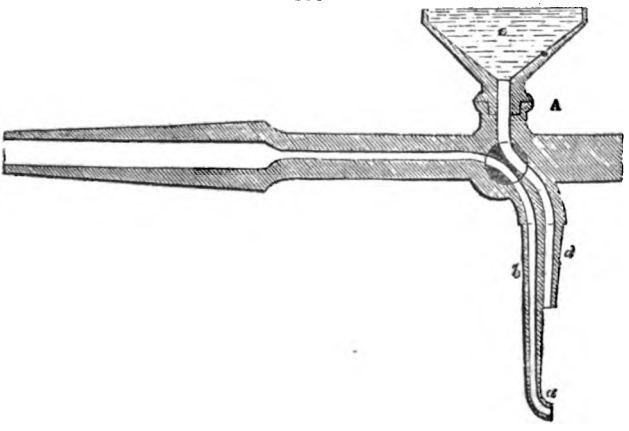

Digitized by Google

The following analyses of German beers are by Leo:—

	Lichtenhain.	Upper Weimar.	Ilmenau.	Jena.	Double Jena.
Alcohol - -	3·168	2·567	3·096	3·018	2·080
Albumen - -	0·048	0·020	0·079	0·045	0·028
Extract - - -	4·485	7·316	7·072	6·144	7·153
Water - - -	92·299	90·097	89·753	90·793	90·739
	100·000	100·000	100·000	100·000	100·000

Under the term extract, in these analyses, is meant a mixture of starch, sugar, dextrine, lactic acid, various salts, certain extractive and aromatic parts of the hop, gluten, and fatty matter.

The quantity of beer and ale *exported* from the United Kingdom amounted in 1850 to 182,480 barrels, and in 1851 to 191,639; the declared value being respectively 558,794*l.*; and 577,874*l.* and in 1856 to 410,412 barrels.

In 1864 we exported from the United Kingdom, as follows:—

Countries to which sent.	Barrels.	Declared real value.
To Russia - - -	3,403	£12,914
„ Prussia - - -	2,602	9,068
„ Hamburg - -	4,274	14,789
„ Holland - - -	1,799	6,430
„ Belgium - - -	2,977	10,224
„ France - - -	8,808	26,612
„ Portugal, Azores, and Madeira -	1,236	4,792
„ Spain and the Canaries - -	697	2,929
„ Turkey Proper -	1,971	9,711
„ Egypt - - -	2,199	10,917
„ Western Africa	413	2,099
„ Java - - - -	742	4,014
„ China, (exclusive of Hong Kong - - -	5,713	23,244
„ Japan - - - -	1,463	5,846
„ Cuba - - - -	9,633	39,797
„ Porto Rico - -	488	2,509
„ St. Thomas - -	1,815	9,234
„ Hayti - - -	661	2,674
„ United States:—		
N. Atlantic Pts.	3,255	15,660
S. Atlantic Pts.	91	467
Pacific Ports -	6,433	27,284
„ Mexico - - -	1,740	6,897
„ Central America	622	3,962
„ New Granada -	808	4,793
„ Venezuela - -	953	3,683
„ Peru - - - -	5,384	24,132
„ Chili - - - -	7,883	36,468
„ Brazil - - -	18,554	93,171
„ Uruquay - - -	4,215	21,444

Countries to which sent.	Barrels.	Declared real value.
To Argentine Confederation - -	6,088	£30,451
„ Channel Islands	6,966	20,640
„ Gibraltar - -	11,556	35,539
„ Malta - - -	3,926	13,978
„ Western Africa, British - -	1,374	6,010
„ Ascension and St. Helena -	976	4,803
„ British Possessions in S. Africa - - -	16,764	66,815
„ Mauritius - -	7,832	27,531
„ Aden - - - -	1,220	2,738
„ British India:—		
Bombay, Sinde	50,784	144,721
Madras - -	27,082	88,060
Bengal—Pegu	87,564	253,354
Singapore and Eastern Straits	2,254	9,803
„ Ceylon - - -	6,125	23,486
„ Hong Kong - -	5,879	23,873
„ Australia - -	124,522	506,500
„ British N. America - - -	6,805	28,552
„ British West India Islands, and British Guiana - -	26,726	102,928
„ Other countries	3,706	16,091
	498,981	1,841,637

Being an increase of 88,569 barrels over the exports of 1856.

	Gallons.	Computed real value.
Mum - - - - - -	112	£3
Spruce or Ale - - - -	117,012	22,818
Unenumerated - - - -	9,538	358

Digitized by Google

BEES' WAX. The solid matter forming the cells of the honey-comb, secreted according to Huber, by an organ situated in the abdomen of the bee. See WAX.

BEETLE. A name given to a large wooden hammer, usually with two handles, with which wedges, stakes, and the like, are driven.

BEETLE. A name usually given to the insects of the Coleopterous order, especially to those of a dark colour. The species of Coleopterous insects known amount to nearly 40,000. The cantharides are used medicinally. The larva of *Cerambyx heros* was regarded by the Romans as a delicacy. The American Indians eat the larva of *Calandra palmarum*. The name is applied to the annoying insects which infest the kitchens of houses in large towns; they are the *blatta* or cockroach, and belong to the *Orthopterous order*.

BEETLE'S WINGS. The elytra or wing cases of the more brilliantly coloured beetles. (*Coleoptera.*) These are used in making head-dresses for ladies, and for decorating muslins, scarfs, and ball dresses. In Brazil especially, those wings are used for ornaments, and much art is bestowed in their production. Since the Exhibition of 1862, when Brazil exhibited a large collection of the beetle's wing ornaments, a considerable number have been imported.

BEET ROOT. (*Betterave*, Fr.; *rothe Rübe*, Germ.) The large fleshy root of the *beet*, a plant of the genus *Beta*. There are two distinct species cultivated, each containing several varieties. One called *Hortensis*, producing succulent leaves only; the other, the *Vulgaris*, distinguished by its long fleshy root. The variety of the *Vulgaris*, known as the *red beet*, is much cultivated in our gardens, and used as a vegetable. The *white beet* is in much repute in Belgium and France for the manufacture of sugar. See SUGAR.

The common *field beet*, for cattle, which has been long known in Germany, was introduced into England at the latter end of the last century; and its introduction is generally attributed to the late Dr. Lettsom, a physician of great repute, and one of the Society of Friends. The German name is *mangold wurzel*, or mangold root, but is commonly pronounced *mangel wurzel*, which means scarcity root; and, by a strange translation, it is called in French *racine d'abondance*, or root of plenty, as well as *racine de disette*, or root of scarcity. The name *field beet* is much more appropriate. —*Penny Cyclopædia.*

The analyses of Way and Ogston give the following Composition for two Varieties of the Beet Root, and the Analysis of Griepenkerl for another.

Substances contained.	Yellow Globe Mangold Wurzel.		Long Red Mangold Wurzel.		Red Beet.
	Root.	Leaves.	Root.	Leaves.	Root.
Potassa	25·54	8·34	21·68	27·90	51·10
Soda	19·08	12·21	3·13	3·01	
Lime	1·78	8·72	1·90	8·17	2·45
Magnesia	1·75	9·84	1·79	7·03	2·94
Sesquioxide of Iron	0·74	1·46	0·52	0·96	0·35
Sulphuric Acid	3·68	6·54	3·14	4·60	3·31
Silica	2·22	2·35	1·40	2·26	0·19
Carbonic Acid	18·14	6·92	15·23	6·45	
Phosphoric Acid	4·49	5·89	1·65	5·19	10·77
Chloride of Sodium	24 54	37·66	49·51	34·39	17·04
Total amount	99·96	99·95	99·95	99·96	99·99
Per-centage of ash in the dry substance	11·32	14·00	7·10	17·90	7· 8
Per-centage of ash in the fresh substance	1·02	1·40	0·64	1·79	

The quantity of beet root used in the Zollverein States of Germany in the manufacture of sugar was as follows:—

	Centners.
For the year 1849–50	11,525,678
„ 1850–51	16,000,000
„ 1851–52	20,000,000

The centner varies, in different localities, from 100 to 112 avoirdupois pounds.

Digitized by Google

BELLADONA. (*Belledame*, Fr.) The *Atropa Belladona*, or deadly nightshade.
BELL METAL, an alloy of copper and tin. See BRONZE and COPPER.
BELL-METAL ORE. Sulphide of Tin. (*Étain sulphuré*, Haüy; *Zinnkies*, Hausmann.)
The composition of the ordinary variety of this ore is,

Copper - - - - - -	30·0
Iron - - - - - -	12·0
Tin - - - - - -	26·5
Sulphur - - - - -	30·5
	99·0

It was found in many of the Cornish mines, and especially at Carn Brea, but is now rare.
BELLOWS. See METALLURGY.
BELLS. Church bells are said to have been originated in Italy; but bells were certainly cast at a very early period in the East. They were evidently used by the ancient Egyptians, and at a very early date amongst the Chinese. All the more celebrated bells are manufactured of bronze, or bell-metal (these alloys are described under their respective heads).
The following are the weights of a few of the largest bells:—

	lbs.
The great bell of Moscow - - -	443,772
The bell of St. Ivan - - - -	127,836
Another bell in the same city - - -	39,827
Ditto ditto, cast in 1819 - -	112,000
The bell in the cathedral, Paris - -	38,800
Ditto ditto Vienna - -	39,648
The bell in the church at Erfurt - -	30,800
Great Tom of Oxford - - - -	17,000
Ditto Lincoln - - - -	9,894
The bell of St. Paul's, London - -	8,400

The Big Ben of the New Houses of Parliament having proved a failure, evidently from defective casting, the broken fragments of the metal presenting great inequalities, and exhibiting a very porous structure, requires no special notice: of the bell which is to succeed it, we know as yet nothing. Mr. Dennison, to whom Government intrusted the construction of the bell, makes the following remarks on the form of bells in his lecture at the Royal Institution:—
"Now, from these and other experiments, I have come to the conclusion that bells of the common and well-known shape, with a thick lip or sound bow, are the most effective known instruments for producing a loud and musical sound, such as you want when you erect a large public clock, or put up a peal of church bells. And I confess, also, that after trying, at Messrs. Warners', a number of experiments with bells of the usual *general* form, but with various deviation in the details, I am equally satisfied that there is nothing to be gained by deviating materially from the established proportions of the best old bells. And I think it is some confirmation of my views to tell you that Professor Wheatstone, having been commissioned by the Board of Works with Sir C. Barry, on his own suggestion, to collect information at the late Paris Exhibition respecting the most esteemed chimes in France and Belgium, and whether there are in those countries makers acquainted with the traditions of the art, or who have applied the discoveries of science to the improvement of bells, *or to efficient substitutes for them*, has come back with the conclusion that no such efficient substitutes have been discovered; nor is there any known improvement on the established mode and materials for casting them. Sir C. Barry and he, indeed, seem to have been rather impressed with the merits of the cast-steel bells, which you have seen noticed in the newspapers. I have not heard them myself, but I have heard such condemnation of their harshness of sound from other persons, of probably more experience in such matters, that I do not the least believe in their being received generally as an efficient (though they may be a cheap) substitute for the more expensive compound of copper and tin; and, on the whole, that seems to be Professor Wheatstone's opinion also."
In 1864, we *exported* of BELLS and BELL METAL:—

Cwts.	Declared Value.
439 - - - - -	£2,644

Digitized by Google

BENGAL STRIPES. Ginghams; a kind of cotton cloth woven with coloured stripes, so called from the cottons which we formerly imported from Bengal.

BEN NUTS. (*Noix de ben*, Fr.; *Salbnusse*, Germ.) The tree which furnishes these nuts is the *Guilandina moringa* of Linnæus, a native of India, Ceylon, Arabia, and Egypt.

BEN OIL. The oil of ben, which may be obtained from the decorticated nuts, is said to be far less liable than other oils to become rancid, and hence it is much used by watchmakers. At a low temperature, the oil of ben separates into two parts—one solid and one fluid; the latter only is used for watch-work. At one time oil of ben was employed as a base for the enfleurage process of making perfumed oils from flowers in the south of France, brought thence from the Levant, but from some unknown reason it has long since ceased to be imported, and oil of ben is now a very rare article of commerce. An attempt has been made in Jamaica, by Mr. Kemble, to raise the moringa for the sake of this oil, but the samples there produced remained a perfectly solid fat in England throughout the whole year.—S. P.

BENZIDINE. ($C^{24}H^{12}N^2$) An alkali, discovered by Zinin, in acting with reducing agents on arzobenzide and azoxibenzide.—C. G. W.

BENZOIN, or BENJAMIN. (*Benjoin*, Fr.; *Benzöe*, Germ.) A species of resin, used chiefly in perfumery; improperly called a gum, since it is quite insoluble in water. It is extracted by incision from the trunk and branches of the *Styrax benzoin*, or *Lithocarpus benzoin*, which grows in Java, Sumatra, Santa Fé, and in the kingdom of Siam. The plant belongs to the *Decandria monogynia* of Linnæus and the natural family of the *Ebenaceæ*. The benzoin flows in small quantities spontaneously from the trees; but it is collected by making incisions in the stem, just below where the branches are given off, as soon as the tree has attained an age of five or six years. These incisions are repeated each year for about twelve years, when the tree becomes exhausted. The resin flows out as a white fluid. It hardens readily in the air, and comes to us in brittle masses, whose fracture presents a mixture of red, brown, and white grains of various sizes, which, when white, and of a certain shape, have been called *amygdaloid*, from their resemblance to almonds The *benzoe in sortis* is very impure, containing portions of wood and bark.

The fracture of benzoin is conchoidal, and its lustre greasy; its specific gravity varies from 1·063 to 1·092. It has an agreeable smell, somewhat like vanilla, which is most manifest when it is ground. It enters into fusion at a gentle heat, and then exhales a white smoke, which may be condensed into the acicular crystals of benzoic acid, of which it contains 18 parts in the hundred. Ether does not dissolve benzoin completely. The fat and volatile oils dissolve very little of it.

Unverdorben has found in benzoin, besides benzoic acid and a little volatile oil, no less than three different kinds of resin, none of which has, however, been turned, as yet, to any use in the arts.

Benzoin is principally used in perfumery; it enters into a number of preparations, among which may be mentioned fumigating pastilles, fumigating cloves (called also nails), *poudre à la maréchale*, &c. The alcoholic tincture, mixed with 20 parts of rose-water, forms the cosmetic *virginal* milk. Benzoin enters also into the composition of certain varnishes employed for snuff-boxes and walking-sticks, in order to give these objects an agreeable smell when they become heated in the hand. It is added to the spirituous solution of isinglass, with which court-plaster is made.

BENZOIC ACID. ($C^{14}H^5O^3$) This acid may be obtained by placing benzoin powdered, with sand, in an evaporating basin, and above it a paper cap; on applying heat carefully to the sand, acid vapours arise from the resin, and they are deposited in the form of fine light crystals with the paper cap. Stolze recommends the following process for extracting the acid:—The resin is to be dissolved in three parts of alcohol, the solution is to be introduced into a retort, and a solution of carbonate of soda dissolved in dilute alcohol is to be gradually added to it, till the free acid be neutralised; and then a bulk of water equal to double the weight of the benzoin is to be poured in. The alcohol being drawn off by distillation, the remaining liquor contains the acid, and the resin floating upon it may be skimmed off and washed, when its weight will be found to amount to about 80 per cent. of the raw material.

BENZOLE. *Syn.* Benzine, benzene, benzol, hydruret of phenyle ($C^{12}H^6$). A compound of carbon and hydrogen discovered by Faraday in the products of the destructive distillation of whale oil. The more volatile portion of coal naphtha has been shown by Mansfield to consist chiefly of this substance. It is produced in a great number of reactions in which organic bodies are exposed to high temperatures. It may at once be obtained in a state of purity by distilling benzoic acid with excess of quicklime. The lime acts by removing two equivalents of carbonic acid from the benzoic acid. The method of obtaining benzole from coal naphtha will be found fully described under the head of

Digitized by Google

NAPHTHA COAL. Benzole is also contained in considerable quantity in bone oil; but it is accompanied by peculiar nitrogenised volatile fluids, which are difficult of removal. The latter, owing to their powerful and fetid odour, greatly injure the quality of the bone-oil benzole. Benzole is an exceedingly volatile fluid, boiling at ordinary pressures at 187° F. Its density is 0·850. Owing to the levity of benzole being regarded by manufacturers as a proof of its purity, it is not uncommon to find it adulterated with the naphtha from the Torbanehill mineral, or Boghead coal, which has a density as low as 0·750. Any benzole having a lower density than 0·850 is impure. Benzole is excessively inflammable, and its vapour mixed with air is explosive. Numerous lives have been lost owing to these properties, among them that of Mr. Mansfield, to whom we are indebted for an excellent investigation on coal naphtha. Benzole is greatly used in commerce, owing to its valuable solvent properties. It dissolves caoutchouc and gutta percha readily, and, on evaporation, leaves them in a state well adapted for waterproofing and many other purposes. Its power of dissolving fatty, oily, and other greasy matters, has caused it to become an article of commerce under the name of benzoline. It readily extracts grease even from the most delicate fabrics, and, as it soon, on exposure to the air, evaporates totally away, no odour remains to betray the fact of its having been used. It dissolves readily in very strong nitric acid, and, on the addition of water, it is precipitated as a heavy oil, having the composition $C^{12}H^5NO^4$. The latter compound is nitrobenzole; it is regarded as benzole in which one equivalent of hydrogen is replaced by hyponitric acid. Nitrobenzole, in a state of tolerable purity, is a pale-yellow oil, having a sweetish taste, and an odour greatly resembling bitter almonds. Owing to its comparative cheapness, it is employed in perfumery. Nitrobenzole can be prepared with nitric acid of moderate strength, such as is ordinarily obtained in commerce; but it then become necessary to distil the acid and the hydrocarbon together several times. The product so obtained is darker in colour, and in other respects inferior to that obtained with highly concentrated acid. By treatment with acetate of protoxide of iron, nitrobenzole becomes transformed into aniline. This change may be effected, but far less conveniently, by means of sulphide of ammonium. Benzole is extremely valuable in many operations of manufacturing chemistry. It dissolves several alkaloids, and, on evaporation, leaves them in a state of purity. It dissolves quinine, but not cinchonine, and may therefore be employed as a means of separation. Morphia and strychnine are also dissolved by it, but not in great quantity. To obtain many natural alkaloids existing in plants, it is merely necessary to digest the dry extract with caustic potash and then with benzole. The latter is to be decanted, and then distilled off on a water-bath. The alkaloid will be left behind in a state well adapted for crystallisation or other means of purification. Benzole is becoming much used as a solvent in researches in organic chemistry. Many substances, such as chrysene and bichloride of naphthaline, crystallise better from benzole than from any other solvent.

Benzole may be employed in many ways for illuminating purposes. It is so easily inflamed that great care is necessary in using it. It does not require a wick to enable it to burn. If poured, even on an uninflammable surface and a light be applied, it takes fire like a train of gunpowder, and burns with a brilliant flame, emitting dense clouds of smoke, which, soon condensing into soot, presently fall in a shower of blacks. Even on the surface of water it burns as freely as anywhere else. If a drachm or two be poured on water contained in a pan, and a pellet of potassium be thrown in, the benzole inflames, and rises in a column of flame of considerable height. A method of destroying enemies' shipping has been founded on this principle. In consequence of the smoky nature of the flame of benzole (caused by the comparatively larger percentage of carbon), it is often convenient to burn a mixture of one volume of benzole and two volumes of alcohol. A stream of air driven through benzole becomes so inflammable as to serve for the purposes of illumination. For this mode of using the hydrocarbon, it should be kept slightly warm to assist its vaporisation. A machine on this principle, of American invention, has been employed to illuminate houses. The air is driven through the benzole by a very simple contrivance, the motive power being a descending weight.

When quite pure, benzole freezes at 32° to a beautiful snow white substance, resembling camphor. The mass retains the solid form until a temperature of 40° or 41° is reached. This property of solidifying under the influence of cold may be made use of to produce pure benzole from the more volatile portion of coal naphtha. To obtain it perfectly pure, it should be frozen at least three times, the portion not solidifying being removed by filtration through calico. The unfrozen portion contains hydrocarbons, homologous with olefiant gas.

Benzole dissolves free iodine and bromine, and has even been used in analysis to separate them from kelp and other substances containing them. They must of course be set free before acting with the hydrocarbon. The presence of benzole in mixtures

Digitized by Google

may easily be demonstrated, even when present in very small quantity, by converting it into aniline, and obtaining the characteristic reaction with chloride of lime. For this purpose the mixture is to be dissolved in concentrated nitric acid and the nitro-benzole precipitated by water. The fluid is then agitated with ether, which dissolves the nitrocompound. The ethereal solution is mixed with an equal bulk of alcohol and hydrochloric acid: a little granulated zinc being added, hydrogen is evolved, and, by acting in a nascent state on the nitro-compound, reduces it to the state of aniline. The base is then to be separated by an excess of potash, and the alkaline fluid is shaken with ether to dissolve the base. The ethereal fluid being evaporated, leaves the aniline. On adding water and then a few drops of solution of chloride of lime, the purple colour indicative of aniline is immediately produced. (*Hofmann.*) The writer of this article has by this process detected minute traces of benzole in mixtures consisting almost entirely of homologues of olefiant gas.—C. G. W.

BERGAMOT. (*Bergamotte*, Fr.) The *Citrus bergamia*, a citron cultivated in the centre and south of Europe. By distillation from the rind of the fruit is obtained the well-known essence of bergamot. See OILS, ESSENTIAL.

The ottoes, or essential oils, from fruits such as the bergamot, the lemon, and the orange may all be procured by distillation, but these products thus procured are not valued by the manufacturing perfumer so much as when they are obtained by rasping the peel of the fruit and collecting the essence thus disengaged, finally filtering. The rasps employed for this purpose are hollow cones filled with spikes, in which the fruit is dexterously revolved by hand. All essences that are distilled are modified in their composition by the presence of the watery vapour and high temperature.—S. P.

BERGAMOT. A coarse tapestry, said to have been invented at Bergamo, in Italy, made of ox and goats' hair, with cotton or hemp.

BERLIN BLUE. A fine variety of the Prussian blue (*which see*).

BERRY. The term is commonly applied, not only to small fruit, but in some cases to seeds. The following is Professor Lindley's definition of a berry:—"A succulent or pulpy fruit containing naked seeds, or, in more technical language, a succulent or pulpy pericarp, or seed-vessel without valves, containing several seeds, which are naked, that is, which have no covering but the pulp and rind. It is commonly round or oval. But in popular language, *berry* extends only to smaller fruits, as strawberry, gooseberry, &c., containing seeds or granules. An indehiscent pulpy pericarp, many celled and many seeded; the attachment of the seeds lost at maturity, and the seeds remaining scattered in the pulp."

Berries are used in some of the processes of manufacture, but they are not of much importance.

Bay Berries.—The fruit of the *Laurus nobilis*, or the sweet bay. Both the leaves and the fruit are employed as flavourings. A volatile oil, the *oil of sweet bay*, is obtained by distillation with water; and a fixed oil, by bruising the berries, and boiling them for some hours in water; this oil, called also *Laurel fat*, is imported from Italy.

Turkey Yellow Berries.—The unripe fruit of the *Rhamnus infectorius*. They are used in calico printing, producing a lively but fugitive yellow colour.

Persian Yellow Berries.—These are said to be produced by the same species of plant; but the colour is considered more permanent, and they fetch higher prices.

Berries of Avignon.—Another name given to the Turkey and Persian berries.

Juniper Berries.—The fruit of the *Juniperus communis*. They are chiefly used for flavouring gin and some spirituous cordials, and in the preparation of some pharmaceutical articles, as the oil of juniper and the compound spirits of juniper.

Bear Berry.—The fruit of the *Uva ursi*. The leaves only are used medicinally.

Myrobolans.—The fruit of a tree which grows in India. It has a pale-yellow colour when new, but becomes darker by age, and then resembles dried plums. It contains tannin, and has hence been used in dyeing.

In 1864 we *imported*:—

	cwts.	Computed real value.
BERRIES, YELLOW:		
From Turkey Proper - - - - - -	4,153	£14,276
Other Parts - - - - - - -	135	453
BERRIES, JUNIPER - - - - - - -	3,599	1,502
MYROBOLAN - - - - - - -	40,289	22,334
Unenumerated - - - - - - -	95	123

BERTHOLLETIA. A plant of the natural order *Lecythideæ*, the *Bertholletia excelsa*. It is a tree of large dimensions, forming extensive forests on the banks of the Orinoco. The Portuguese of Para have for a long time driven a great trade with the nuts of this tree, which the natives call *Iuvia*, and the Spaniards *Almendron*. They send cargoes to French Guiana, whence they are shipped for England and Lisbon.

Digitized by Google

The kernels yield a large quantity of oil well suited for lamps.—*Humboldt and Bonpland.*

BERYL. (*Béril*, Fr.; *Beryl*, Germ.; *Smaragd*, Ital.) A beautiful mineral or gem, usually of a green colour of various shades, passing into honey yellow and sky blue.

Beryl and emerald are varieties of the same species, the latter including the rich green transparent specimens which owe their colour to oxide of chrome; the former those of other colours produced by oxide of iron. Gmelin gives the composition of beryl as:—

Silica	69·70
Alumina	17·60
Glucine	13·39
Red oxide of iron	0·24

"Beryls of gigantic size have been found in the United States, at Acworth and Grafton, New Hampshire, and Royalston, Mass. One beryl from Grafton weighs 2900 lbs.; it is 32 inches through in one direction, and 22 in another transverse, and is 4 feet 3 inches long. Another crystal from this locality, according to Professor Hubbard, measures 45 inches by 24 in its diameters, and a single foot in length; by calculation, weighs 1076 lbs., making it, in all, nearly 2½ tons. At Royalston, one crystal exceeded a foot in length."—*Dana.*

False Beryls of Commerce.—Some of the natural crystals of phosphate of lime are introduced as beryls. The *Apatite* is sometimes called the *Saxony beryl.* The *Chrysolite*, known by the Germans as the *Pierre d'Asperge*, is also sold as the beryl.

BETEL. A compound, in universal use in the East, consisting of the leaf of the betel-pepper, with the betel-nut, a little catechu, and some chunam (lime obtained by calcining shells). This is almost universally used throughout central and tropical Asia; the people are unceasingly masticating the betel. The leaf of the pepper vine (*Piper betel*), is extensively cultivated throughout tropical Asia, and forms a large article of Eastern traffic.

BETEL-NUT, or ARECA. The fruit of the *Areca catechu*, which is eaten both in its ripe and its unripe state.

BÉTON. The French name for concrete. Self-slacked hydraulic lime is mixed with sand, and when the mixture is complete it is beaten up with the ballast. See CONCRETE.

BEUHEYL. A mining term, signifying *a living stream.* It is applied by the tin miners to any portion of a lode or of the rock which is impregnated with tin.

BEZOAR. (The most probable etymology of the word is from the Persian *Pâdzahr*, i. e. expelling poison.—*Penny Cyclopædia.*) A concretion found in the stomach of animals of the goat kind; it is said to be especially produced by the *Capra gazella.* The finest bezoar is brought to India from Borneo and the shores of the Persian Gulf. The *Capra Ægagrus*, or wild goat of Persia producing this concretion, which, by way of eminence, was called the *Lapis bezoar orientalis.* The bezoars, which were supposed to cure all diseases, have been found, by the analyses of Fourcroy and Vauquelin and of Proust, to be nothing more than some portions of the food of the animal agglutinated into a ball with phosphate of lime.

Fossil bezoar is found in Sicily, in sand and clay pits. They are concretions of a purple colour around some, usually organic, body, and the size of a walnut. Fossil bezoar is sometimes called *Sicilian earth*; and it appears to be of a similar character to Armenian bole.

Bezoar Mineral.—An old preparation of the oxide of antimony.

BIBIRU and BIBIRINE. See GREENHEART TREE.

BICARBONATES. The ordinary carbonates of potash and soda have a strong alkaline reaction and caustic taste, making them unfit for many purposes where a soluble carbonate is required. Moreover, there are many uses to which they are applied, rendering it desirable that as large an amount of gas as possible should be given off on the addition of a stronger acid.

Bicarbonate of Potash.—There are several modes of converting the carbonate into bicarbonate. The most economical is by exposing the salt to a current of carbonic acid. For this purpose some manufacturers place it, slightly moistened, on stoneware trays, and allow the vapours of burning coke to travel slowly over it. The sources of the gas used in this manufacture will vary according to the locality in which it is undertaken. It is not unusual to produce it by the action of sulphuric acid on limestone. The gas generated in fermentation has been employed, and even that which in some places issues from the earth. The bicarbonate of potash is far less soluble than the carbonate, as it requires four parts of cold water for solution, whereas the carbonate dissolves in 0·9 of its weight of water at 54° F. Consequently, if a strong

Digitized by Google

solution is saturated with carbonic acid, the bicarbonate crystallises out. When common pearl ashes are dissolved in water, and the gas is passed in, a large quantity of a white precipitate is often thrown down; it consists chiefly of silica, but often contains alumina and other matters. Considerable heat is developed when moistened carbonate of potash is exposed to a current of carbonic acid gas. When carbonate of potash is dissolved in water, and gradually treated with acetic acid, so as to form acetate of potash, by no means the whole of the carbonic acid is expelled, and a point is arrived at when a considerable quantity of crystals is deposited; they consist of very pure bicarbonate of potash. In making acetate of potash on the large scale, the quantity of crystalline precipitate obtained in this manner is sometimes very large. Bicarbonate of potash is usually tolerably pure. If well crystallized, all the impurities remain in the mother-liquor, and on heating to redness almost exactly the theoretical amount of residue is left, viz. 69·05 per cent. Crystallised bicarbonate of potash always contains one equivalent of water, its formula being $KO, 2CO^2 + HO$.

Bicarbonate of Soda. — This salt is obtained by the same methods as the salt of potash. The crystals have a corresponding formula to the potash salt; namely, $NaO, 2CO^2 + HO$. It requires about 13 parts of water at 60° to dissolve it. When pure, 100 parts leave 63·18 of NaO, CO^2 on ignition.

The bicarbonates of potash and soda lose carbonic acid by the boiling of an aqueous solution.

Modern theoretical chemists regard carbonic acid as being bibasic, the true formula being C^2O^4, instead of CO^2. There can be little doubt that this view is the correct one, and it has the advantage of explaining why the bicarbonates are neutral instead of acid salts. Moreover, C^2O^4 corresponds to 4 volumes, like organic substances generally; whereas, if we assume CO^2 as one atom of the gas, we are compelled to admit a 2-volume formula. — C. G. W.

BIDERY. An Indian alloy of considerable interest, named Bidery from Bider, a city N.E. of Hyderabad. Many articles are made, remarkable for elegance of form and for gracefully-engraved patterns. Although the groundwork of this composition appears of a blackish colour, its natural tint is that of pewter or zinc.

Dr. Heyne says it is composed of, copper, 16; lead, 4; tin, 2; and to every 3 ounces of alloy 16 ounces of spelter (that is, of zinc) are added, when the alloy is melted for use. To give the esteemed black colour and to bring out the pattern, it is dipped in a solution of sal ammoniac, saltpetre, common salt, and blue vitriol. Dr. Hamilton saw, zinc, 12,360 grains; copper, 400; and lead, 414; melted together under a mixture of resin and bees' wax introduced into the crucible to prevent calcination; it was then poured into moulds of baked clay, and the articles handed over to be turned in a lathe. Though called bidery and sometimes vidry, it is manufactured in other places. In some parts of the Nizam's dominions, specimens were obtained, for the Exhibition of 1851, of great beauty. Bidery does not rust, yields little to the hammer, and breaks only when violently beaten. According to Dr. Hamilton, bidery is not nearly so fusible as zinc or tin, but melts more easily than copper.—*Dr. Royle, Lecture on the Great Exhibition.*

BIG. See BARLEY.

BIJOUTRY. (*Bijouterie*, Fr.) Jewellery;—the manufacture of and dealing in jewellery. This work is not the place in which to describe the almost endless variety of articles which come under this denomination. The principal places for the manufacture, in England, are Birmingham and London. The trade in jewellery forms one of the most important branches of French commerce; on which a French writer says: "La bijouterie est une des branches les plus importantes du commerce français, et c'est elle qui constate, de la manière la plus évidente, notre superiorité dans les arts du dessin et les progrès toujours croissans de l'industrie Parisienne. Dans cette partie essentielle, elle n'a pas de rivaux, et elle rend tributaire de notre pays presque toute l'Europe, et une grande partie de l'Asie et de l'Amérique."

The ordinary practice has been to divide articles of this character into two principal kinds — fine jewellery, and false jewellery (*bijoutier en fin* and *bijoutier en faux*). Another division, among the French jewellers especially, has been to adopt four classes: 1, fine jewellery, which is all gold; 2, silver jewellery; 3, false jewellery; and, 4, jewellery of steel or iron.

In the article ALLOYS will be found the quantity of the baser metal which is permitted to be combined with gold; and also the proportions of the alloys forming the brasses which are employed in the false jewellery.

Under their respective heads the true gems will be described (see DIAMOND, EMERALD, &c.); and under GEMS, ARTIFICIAL, the imitations of them; many of the false, so nicely representing the peculiarities of the true gems as to deceive even the practised eye. The hardness is, however, an unfailing test; if, therefore, any gem is

Digitized by Google

found to be scratched with a steel file, we may depend on its being artificial. See also PEARLS, ARTIFICIAL; LAPIDARY WORK; GLASS, &c.

BILE. (*Bile*, Fr.; *Galle*, Germ.) The secreted liquor of the liver in animals.

Bile (ox's) is composed, according to Berzelius, of:—

1. Biline, fellinic acid, and fat of gall	8·00
2. Mucus	0·30
3. Alkali combined with biline, &c.	0·41
4. Muriate of soda, extractive matter	0·74
5. Phosphate of soda, do. of lime, &c.	0·11
6. Water	90·44
	100·00

Thenard's analysis gives:—

1. Resin of bile and picromel (acid gallenate of soda)	10·54
2. Colouring matter	0·50
3. Soda	0·50
4. Phosphate of soda	0·25
5. Muriate of soda	0·40
6. Sulphate of soda	0·10
7. „ „ lime	0·15
8. Traces of oxide of iron	
9. Water	87·56
	100·00

Strecker and Mulder have published two treatises on ox-gall. The two views advocated by these chemists will be found in the "Annual Report of the Progress of Chemistry of Liebig and Kopp," translated by Hofmann and De la Rue.

The analyses of Benach ("Ann. Ch. Phar.") give the following as the composition of the gall of several animals:—

	Carbon.	Hydrogen.	Nitrogen.	Sulphur.	Ash.
Calves	55·4	7·7	3·3	4·9	13·15
Sheep	57·3	7.8	3·9	5·7	11·86
Goats	57·3	8·2	—	5·2	13·21
Bears	57·7	8·3	—	5·8	8·42
Fowls	57·5	8·3	3·5	5·0	10·99
Fish	56·0	8·1	2·5	5·6	14·11

Heintz remarks (Poggendorff's "Annalen"), that the change of colour sometimes produced—for it does not appear always—by nitric acid in liquids containing bile (first green, then blue, violet, red, and lastly, yellow), is occasioned only by the colouring matter, which Berzelius has named *cholepyrrhin*, and not by the essential constituents of the bile, and can therefore be regarded only as a test for the presence of this substance.

For the chemical examination of bile, see Watts' "Dictionary of Chemistry;" for its uses in the arts, see GALL.

BIND. The name by which many of the coal measure shales are locally known in many districts. They are generally more or less bituminous, and calcareous. Since so much attention has been directed to the production of petroleum, many of those "binds" have been subject to distillation, with variable results. See PETROLEUM.

BINDING COAL. See COAL.

BIRDLIME. (*Glu*, Fr.; *Vogelleim*, Germ.) The best birdlime may be made from the middle bark of the holly boiled seven or eight hours in water till it is soft and tender, then laid by heaps in pits under ground, and covered with stones after the water is drained from it. There it must be left during two or three weeks, to ferment in the summer season, and watered, if necessary, till it passes into a mucilaginous state. It is then to be pounded in a mortar to a paste, washed in running water, and kneaded till it be free from extraneous matters. It is next left for four or five days in earthen vessels to ferment and purify itself, when it is fit for use. Birdlime may be made by the same process from the mistletoe (*Viburnum Lantana*), young shoots of elder, and the barks of other vegetables, as well as from most parasitical plants.

Good birdlime is of a greenish colour and sour flavour, somewhat resembling that of linseed oil—gluey, stringy, and tenacious. By drying in the air it becomes brittle, and may be powdered; but its viscosity may be restored by moistening it. It contains resin, mucilage, a little free acid, colouring and extractive matter. The resin has been called viscine.

Macaire has examined a substance which exudes from the receptacle and involucre

Digitized by Google

of the *Atractylis gummifera*, and describes it as the pure matter of birdlime, which he calls viscine. Common birdlime may be regarded as a mixture of *viscine*, vegetable mucilage, and vinegar.

The mistletoe yields a peculiar viscid gluey substance, consisting of a green wax and birdlime.

BISCUITS. Biscuit baking constitutes two separate branches of manufacture,—namely, that of ordinary biscuit, or, so to speak, biscuit "proper," for maritime purposes, and that of fancy biscuits. Ordinary, or sailors', biscuit consists of only flour and water kneaded into a paste, cut in the proper shape, docked, and baked in an oven; fancy biscuits consist also of flour and water, but with an addition of butter, sugar, eggs, spices, or "flavourings," all or either of them according to the kind.

Ships' biscuits are now made by machinery, and one of the reasons for this has been that the manual preparation of them was too slow and too costly during the French war. A landsman knows very little of the true value of a biscuit: with a seaman, biscuit is the only bread that he eats for months together. There are many reasons why common loaves of bread could not be used during a long voyage: because, containing a fermenting principle, they would soon become musty and unfit for food if made previous to the voyage, while the preparation of them on board ship is subject to insuperable objections. Biscuits contain no leaven, and, when well baked throughout, they suffer little change during a long voyage.

The allowance of biscuit to each seaman on board a queen's ship is a pound per day (averaging six biscuits to the pound). The supply of a man-of war for several months is, consequently, very large; and it often happened during the long war that the difficulty of making biscuits fast enough was so great, that at Portsmouth waggon loads were unpacked in the streets and conveyed to the ships.

We shall now describe the mode of making biscuits by hand, and afterwards speak of the improved method. The bakehouse at Gosport contained nine ovens, and to each was attached a gang of five men,—the "turner," the "mate," the "driver," the "breakman," and the "idleman." The requisite proportions of flour and water were put into a large trough, and the "driver," with his naked arms, mixed the whole up together into the form of dough—a very laborious operation. The dough was then taken from the trough, and put on a wooden platform called the break: on this platform worked a lever called the break-staff, five or six inches in diameter, and seven feet long; one end of this was loosely attached by a kind of staple to the wall, and the breakman, riding or sitting on the other end, worked this lever to and fro over the dough by an uncouth jumping or shuffling movement. When the dough had become kneaded by this barbarous method into a thin sheet, it was removed to the moulding board and cut into slips by means of an enormous knife; these slips were then broken into pieces, each large enough for one biscuit, and then worked into a circular form by the hand. As each biscuit was shaped it was handed to a second workman, who stamped the king's mark, the number of the oven, &c., on the biscuit. The biscuit was then docked, that is, pierced with holes by an instrument adapted to the purpose. The finishing part of the process was one in which remarkable dexterity was displayed. A man stood before the open door of the oven, having in his hand the handle of a long shovel called a peel, the other end of which was lying flat in the oven. Another man took the biscuits as fast as they were formed and stamped, and jerked or threw them into the oven with such undeviating accuracy that they should always fall on the peel. The man with the peel then arranged the biscuits side by side over the whole floor of the oven. Nothing could exceed (in manual labour alone) the regularity with which this was all done. Seventy biscuits were thrown into the oven and regularly arranged in one minute, the attention of each man being vigorously directed to his own department; for a delay of a single second on the part of any one man would have disturbed the whole gang. The biscuits do not require many minutes' baking; and as the oven is kept open during the time that it is being filled, the biscuits first thrown in would be overbaked were not some precaution taken to prevent it. The moulder therefore made those which were to be first thrown into the oven larger than the subsequent ones, and diminished the size by a nice gradation.

The mode in which, since about the year 1831, ships' biscuits have been made by machinery invented by T. T. Grant, Esq., of the Royal Clarence Yard, is this:—The meal or flour is conveyed into a hollow cylinder four or five feet long and about three feet in diameter, and the water, the quantity of which is regulated by a gauge, admitted to it; a shaft, armed with long knives, works rapidly round in the cylinder, with such astonishing effect that in the short space of six minutes, 450 lbs. of dough are produced, infinitely better made than that mixed by the naked arms of a man. The dough is removed from the cylinder and placed under the breaking rollers; these latter, which perform the office of kneading, are two in number, and weigh 15 cwts. each;

Digitized by Google

they are rolled to and fro over the surface of the dough by means of machinery, and in five minutes the dough is perfectly kneaded. The sheet of dough, which is about two inches thick, is then cut into pieces half a yard square, which pass under a second set of rollers, by which each piece is extended to the size of six feet by three, and reduced to the proper thickness for biscuits. The sheet of dough is now to be cut up into biscuits; and no part of the operation is more beautiful than the mode by which this is accomplished. The dough is brought under a stamping or cutting-out press, similar in effect, but not in detail, to that by which circular pieces for coins are cut out of a sheet of metal. A series of sharp knives are so arranged that, by one movement, they cut out of a piece of dough a yard square about sixty hexagonal biscuits. The reason for a hexagonal (six-sided) shape is, that not a particle of waste is thereby occasioned, as the sides of the hexagonals accurately fit into those of the adjoining biscuits, whereas circular pieces cut out of a large surface always leave vacant spaces between. That a flat sheet can be divided into hexagonal pieces without any waste of material is obvious.

Each biscuit is stamped with the queen's mark, as well as punctured with holes, by the same movement which cuts it out of the piece of dough. The hexagonal cutters do not sever the biscuits completely asunder, so that a whole sheet of them can be put into the oven at once on a large peel, or shovel, adapted for the purpose. About 15 minutes are sufficient to bake them; they are then withdrawn and broken asunder by the hand.

The corn for the biscuits is purchased at the markets, and cleaned, ground, and dressed at the Government mills; in quality it is a mixture of fine flour and middlings, the bran and pollard being removed. The ovens for baking are formed of fire-brick and tile, with an area of about 160 feet. About 112 lbs. weight of biscuits are put into the ovens at once. This is called a suit, and is reduced to about 110 lbs. by the baking. From 12 to 16 suits can be baked in each oven every day, or after the rate of 224 lbs. per hour. The men engaged are dressed in clean check shirts and white linen trousers, apron, and cap, and every endeavour is made to observe the most scrupulous cleanliness.

We may now make a few remarks on the comparative merits of the hand and the machine processes. If the meal and the water with which the biscuits are made be not thoroughly mixed up, there will be some parts moister than others. Now, it was formerly found that the dough was not well mixed by the arms of the workman; the consequence of which was, that the dry parts became burnt up, or else that the moist parts acquired a peculiar kind of hardness which the sailors called "flint:" these defects are now removed by the thorough mixing and kneading which the ingredients receive by the machine.

We have seen that 450 lbs. of dough may be mixed by the machine in three minutes and kneaded in six minutes; we need hardly say how much quicker this is than men's hands could effect it. The biscuits are cut out and stamped 60 at a time, instead of singly: besides the time thus saved, the biscuits become more equally baked, by the oven being more speedily filled. The nine ovens at Gosport used to employ 45 men to produce about 1500 lbs. of biscuit per hour; 16 men and boys will now produce, by the same number of ovens, 2240 lbs. of biscuits (one ton) per hour.

The comparative expense is thus stated:—Under the old system, wages and wear and tear of utensils cost about 1*s.* 6*d.* per cwt. of biscuit; under the new system, the cost is 5*d.*

The bakehouses at Deptford, Gosport, and Plymouth could produce 7000 or 8000 tons of biscuits annually, at a saving of 12,000*l.* per annum from the cost under the old system. The advantages of machine-made over hand-made biscuits, therefore, are many—quality, cleanliness, expedition, cheapness, and independence of Government contractors.

Fig. 159 represents the biscuit machinery as executed beautifully by Messrs. Rennie, engineers. *a* is the breaker roller, table, and toller; *b*, the finishing roller, table, and roller; *c c*, docking machines for stamping out the biscuits; *d*, mixing machine for making the dough; *e*, spur pinion to engine shaft; *f*, spur-wheel; *g g*, bevel mitre wheels, to give the upright motion; *h h*, bevel wheels for working the mixing machine; *i i i*, ditto, for communicating motion to the rolling machines, *j j*; *k*, the crank shaft; *l l*, connecting rods; *m m*, pendulums for giving motion to rollers; *n n*, clutches for connecting either half of the machinery to the other.

The manufacture of fancy biscuits, which in former times was confined to the pastry-cook and confectioner, has of late years assumed considerable importance, and several firms are now exclusively engaged in this branch of industry, the products of which are sold under an extraordinary variety of names. Some of these, namely, the "plain biscuit, arrow-root, captain, brown meal, cinnamon, caraway, vanilla biscuits," &c., are intelligible enough; but, if we except "Abernethy biscuit, maccaroons, and

Digitized by Google

cracknels," with the names of which the public, from long usage, are familiar, the rest of the products of the modern biscuit baker, "Africans, Jamaica, Queen's routs,

159

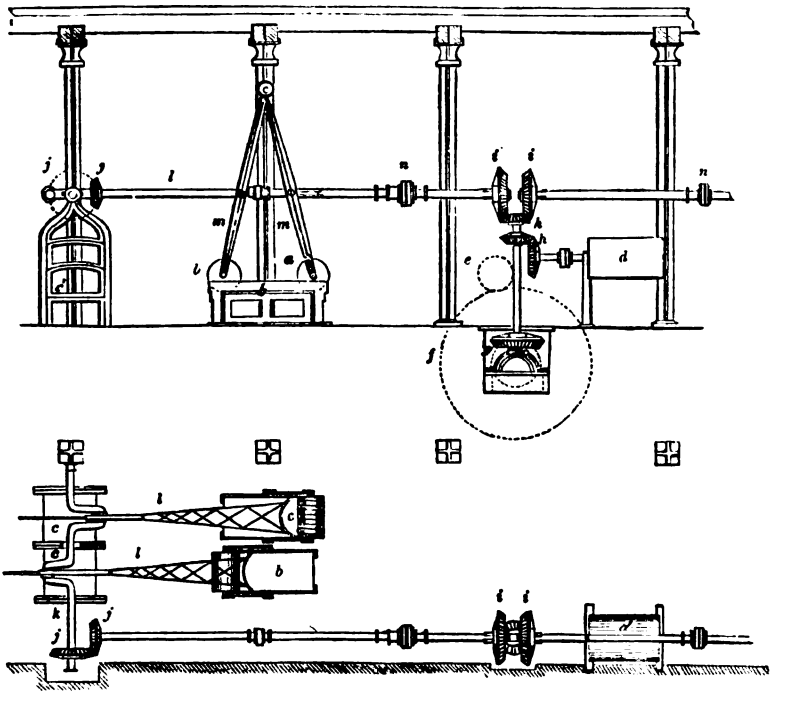

ratafias, Bath and other sorts of olivers, exhibition, rings and fingers, pic-nics, cuddy," &c., &c., forms a list of upwards of eighty fanciful names, all expressive of articles of different form, appearance, and taste, made of nearly the same materials, with but little variation in the proportion in which they are used,— the principal ingredients in all being flour and water, butter, milk, eggs, and caraway, nutmeg, cinnamon, or mace, or ginger, or essence of lemon, neroli, or orange-flower water, called, in technical language, "flavourings." The kneading of these materials is always performed by a kneading or mixing machine. The dough or paste produced is passed several times between two revolving cylinders adjusted at a proper distance, so as to obtain a flat, perfectly homogeneous mass, slab, or sheet. This is transferred to a stamping or cutting machine, consisting of two cylinders, through which the sheet of homogeneous paste has to pass, and by which it is laminated to the proper thickness, and at the same time pushed under a stamping and docking frame, which cuts it into discs, or into oval or otherwise shaped pieces, as occasion may require. The stamps or cutters in the frame being internally provided with prongs, push the cut pieces of dough, or raw cakes, out of the cutting frame, and at the same time dock the cakes, or cut pieces, with a series of holes, for the subsequent escape of the moisture, which, but for these vents, would distort and spoil the cake or biscuit when put in the oven. The temperature of the oven should be so regulated as to be perfectly uniform, neither too high nor too low, but just at such a heat as is sufficient to give the biscuits a light brown colour. For such a purpose the hot water oven of Mr. Perkins, or that of Mr. Roland, is the best that can possibly be used. (See BREAD.) Roland's oven offers the peculiar advantage that, by turning the screw, the sole of the oven can be brought nearer to the top, and a temperature is thus obtained suitable for baking thoroughly, without burning, the thinnest cakes.

One of the most curious branches of the baker's craft is the manufacture of gingerbread, which contains such a proportion of molasses that it cannot be fermented by means of yeast. Its ingredients are flour, molasses or treacle, butter, common potashes,

Digitized by Google

and alum. After the butter is melted, and the potashes and alum are dissolved in a little hot water, these three ingredients, along with the treacle, are poured among the flour which is to form the body of the bread. The whole is then incorporated by mixture, and kneading into a stiff dough. Of these five constituents the alum is the least essential, although it makes the bread lighter and crisper, and renders the process more rapid; for gingerbread, dough requires to stand over for several days, some 8 or 10, before it acquires the state of porosity which qualifies it for the oven; the action of the treacle and alum on the potashes, in evolving carbonic acid, seems to be the gassifying principle of gingerbread; for if carbonate of potash is withheld from the mixture, the bread, when baked, resembles, in hardness, a piece of wood.

Treacle is always acidulous. Carbonate of magnesia and soda may be used as substitutes for the potashes. Dr. Colquhoun has found that carbonate of magnesia and tartaric acid may replace the potashes and the alum with great advantage, affording a gingerbread fully more agreeable to the taste, and much more wholesome than the common kind, which contains a notable quantity of potashes. His proportions are 1 lb. of flour, ½ of an ounce of carbonate of magnesia, and ½ of an ounce of tartaric acid, in addition to the treacle, butter, and aromatics, as at present used. The acid and alkaline earth must be well diffused through the whole dough; the magnesia should, in fact, be first of all mixed with the flour. The melted butter, the treacle, and the acid dissolved in a little water, are poured all at once amongst the flour, and kneaded into a consistent dough, which being set aside for half an hour or an hour, will be ready for the oven, and should never be kept unbaked for more than 2 or 3 hours. The following more complete recipe is given by Dr. Colquhoun for making thin gingerbread cakes:—Flour 1 lb., treacle ½ lb., raw sugar, ½ lb., butter 2 ounces, carbonate of magnesia ½ ounce, tartaric acid ½ ounce, ginger ½ ounce, cinnamon ½ ounce, nutmeg 1 ounce. This compound has rather more butter than common thin gingerbread. In addition to these, yellow ochre is frequently added by cheap gingerbread makers, and altogether this preparation, more generally consumed by children, is very objectionable.

Within the last six years there has been a very remarkable development of the trade in biscuits. Biscuits of all sorts, and really many curious and agreeable varieties, are now manufactured on a large scale, and machinery has been created to facilitate the process. This development of the biscuit trade will be shown by our exports. Fancy bread is named in the returns in connection with biscuits, but this is really but an exceeding small portion of the whole. Our exports of biscuits and bread in 1864 were:—

Exports.

	cwts.	£
To Holland	890	3,052
France	2,455	6,939
Portugal, Azores, and Madeira	1,073	3,077
Western Africa (Foreign)	3,517	2,800
China (exclusive of Hong-Kong	410	1,606
Peru	4,071	3,658
Brazil	1,699	6,153
Uruguay	938	3,031
Argentine Confederation	657	1,453
Channel Islands	3,612	7,116
Gibraltar	507	1,287
Western Africa (British)	933	1,330
British Possessions in South Africa	823	2,645
British India:		
Bombay and Scinde	1,621	4,496
Madras	298	1,317
Bengal and Pegu	1,045	3,387
Singapore and Eastern Straits' Settlements	585	1,924
Ceylon	824	2,672
Hong-Kong	387	1,155
Australia	1,041	4,075
British North America	906	1,502
British West India Islands and Guiana	2,372	3,911
Other Countries	5,908	12,042
	36,572	80,628

BISMUTH. (*Bismuth*, Fr.; *Bismuth*, Germ.) The following are the principal ores of bismuth; the first is the source of the metal used in the arts:—

Digitized by Google

Bismuth, Native, is whitish, with a faint reddish tinge, and a metallic lustre which is liable to tarnish. Streak, silver-white. Hardness, 2 to 2·5; specific gravity, 9·727 It is brittle when cold, but slightly malleable when heated. It generally occurs in a dendritic form. It fuses readily at 476° F. Beautiful crystals can be formed artificially by fusion and subsequent slow cooling.

Native bismuth has been found associated with other minerals: in Cornwall, at Huel Sparnon, near Redruth, when that mine was worked; at Trugoe Mine, near St. Colomb (Greg), and at the Consolidated Mines, St. Ives, Caldbeck Fells, in Cumberland, with ores of cobalt.

Bismuthine, or sulphuret of bismuth, occurs either in acicular crystals, or with a foliated, fibrous structure. It is isomorphous with stibnite. Hardness, 2 to 2·5; specific gravity, 6·4 to 6·9. It is composed of bismuth, 81·6; sulphur, 18·4. It fuses in the flame of a candle.

Bismuthine occurs in Cornwall, at Botallack, and associated with tin at St. Just, and with copper at the mines near Redruth and Camborne.

Bismuth Ochre.—A dull earthy mineral, found in the Royal Restormel Iron Mine, and in small quantities in the parish of Roach, in Cornwall. Its composition is stated by Lampadius to be:—

Oxide of bismuth	86·4
Oxide of iron	5·1
Carbonic acid	4·1
Water	3·1

Telluric Bismuth.—Tetradymite,—occurs in Cumberland, at Brandy Gill, Carrock Fells (Greg). Its composition is:—

Bismuth	83·30
Tellurium	6·65
Sulphur	6·13
Selenium	1·22

Acicular Bismuth.—Aikinite—called also Needle Ore, and the plumbo-cupriferous sulphide of bismuth—is composed of sulphur, 16; bismuth, 34·62; lead, 35·69; copper, 11·79.

Carbonate of Bismuth.—Bismutite. This ore is composed of a mechanical mixture of the carbonates of bismuth, of iron, and of copper.

Cupreous Bismuth.—Tannenite, is sulphur, 18·83; bismuth, 62·16; copper, 18·72.

This metal is also found associated with selenium and tellurium.

Bismuth, which was known as *Marcasite* and as tin glance, was shown to be a metal "somewhat different from lead" by G. Agricola, in 1546. It was studied by Stahl and Dufay; and still more minutely by Pott and Geoffroy, about the middle of the last century.

This metal, the demand for which is limited, is chiefly procured in Saxony, from the mines of Schneeberg; where it occurs mixed with cobalt speiss, in the proportion of about 7 per cent. In the metallurgical works at Schneeberg the metal is obtained by means of a peculiar furnace of liquation. This furnace is represented in *figs.* 160 and 161, of which the first is a view from above, the second a view in front; and *fig.* 162 is a transverse section on the dotted line A, B, of *fig.* 160; *a*, is the ash-pit; *b*, the fire-place; *c*, the eliquation pipes; *d*, the grate, of masonry or brickwork, upon which the fuel is thrown through the fire-door, *e e*. The anterior deeper-lying

160

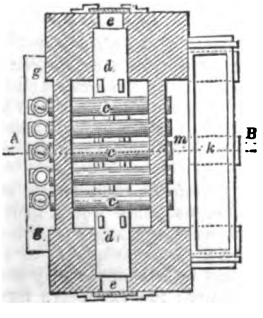

161

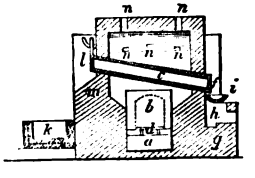

162

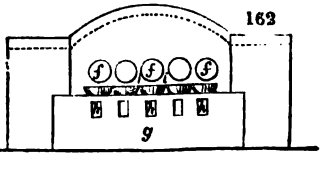

Digitized by Google

orifice of the eliquation pipes is closed with the clay plate, *f*, which has beneath a small circular groove, through which the liquefied metal flows off; *g* is a wall extending from the hearth-sole nearly to the anterior orifices of the liquation-pipes, in which wall there are as many fire-holes, *h*, as there are pipes in the furnace; *i* are iron pans which receive the fluid metal; *k*, a wooden water-trough, in which the bismuth is granulated and cooled; *l*, the posterior and higher lying apertures of the eliquation pipes, shut merely with a sheet-iron cover. The granulations of bismuth drained from the posterior openings fall upon the flat surfaces *m*, and then into the water-trough. *n*, *n* are draught-holes in the vault between the two pipes, which serve for increasing or diminishing the heat at pleasure.

The ores to be eliquated (sweated) are sorted by hand from the gangue, broken into pieces about the size of a hazel nut, and introduced into the ignited pipes; one charge consisting of about ½ cwt.; so that the pipes are filled to half their diameter, and three-fourths of their length. The sheet-iron door is shut, and the fire strongly urged, whereby the bismuth begins to flow in ten minutes, and falls through the holes in the clay-plates into hot pans containing some coal-dust. Whenever it runs slowly, the ore is stirred round in the pipes, at intervals during half an hour, in which time the liquation is usually finished. The residuum, called bismuth barley (*Graupen*), is scooped out with iron rakes into a water trough; the pipes are charged afresh; the pans, when full, have their contents cast into moulds, forming bars of from 25 to 50 lbs. weight. About 20 cwt. of ore are smelted in 8 hours, with a consumption of 63 Leipzic cubic feet of wood. The total production of Schneeberg, in 1830, was 9800 lbs. The bismuth thus procured by liquation upon the great scale contains no small admixture of arsenic, iron, and some other metals, from which it may be freed by solution in nitric acid, precipitation by water, and reduction of the sub-nitrated oxide by black flux. By exposing the crude bismuth for some time to a dull red heat, under charcoal, arsenic is expelled.

Bismuth is white, and resembles antimony, but has a reddish tint; whereas the latter metal has a bluish cast. It is brilliant, crystallises readily in small cubical facets, is very brittle, and may be easily reduced to powder. Its specific gravity is 9·83; and by hammering it with care, the density may be increased to 9·8827. It melts at 480° F., and may be cooled 6° or 7° below this point without fixing; but the moment it begins to solidify, the temperature rises to 480°, and continues stationary till the whole mass is congealed. When heated from 32° to 212°, it expands $\frac{1}{76}$ in length. When pure it affords a very valuable means of adjusting the scale of high-ranged thermometers. At strong heats bismuth volatilises, may be distilled in close vessels, and is thus obtained in crystalline laminæ.

The alloy of bismuth and lead in equal parts has a density of 10·709, being greater than the mean of the constituents; it has a foliated texture, is brittle, and of the same colour as bismuth. Bismuth, with tin, forms a compound more elastic and sonorous than the tin itself, and is therefore frequently added to it by the pewterers. With 1 of bismuth and 24 of tin, the alloy is somewhat malleable; with more bismuth it is brittle. When much bismuth is present, it may be easily parted by strong muriatic acid, which dissolves the tin, and leaves the bismuth in a black powder. It has been said that an alloy of tin, bismuth, nickel, and silver hinders iron from rusting.—*Erdmann's Journal.*

The alloy of bismuth with tin and lead was first examined by Sir I. Newton, and has been called ever since fusible metal. The French give to this alloy the name of *métal fusible de D'Arcet*, and thus claim for him the merit of the discovery of it. 8 parts of bismuth, 5 of lead, and 3 of tin, melted at the moderate temperature of 202° F.; but 2 of bismuth, 1 of lead, and 1 of tin, melt at 200·75° F., according to Rose. A small addition of mercury aids the fusibility. Such alloys serve to take casts of anatomical preparations.

An alloy of 1 bismuth, 2 tin, and 1 lead, is employed as a soft solder by the pewterers; and the same has been proposed as a bath for tempering steel instruments. Cake-moulds for the manufacture of toilet soaps are made of the same metal; as also excellent *clichés* for stereotype, of 3 lead, 2 tin, and 5 bismuth—an alloy which melts at 199° F. This compound should be allowed to cool upon a piece of pasteboard till it becomes of a doughy consistence, before it is applied to the mould to receive the impress of the stamp.

The employment of plates of fusible metal as safety *rondelles*, to apertures in the tops of steam boilers has been proposed in France, because they would melt and give way at elevations of temperature under those which would endanger the bursting of the vessel, the fusibility of the alloy being proportioned to the quality of steam required for the engine. It has been found, however, that boilers, apparently secured in this way, burst, while the safety discs remained entire; the expansive force of

Digitized by Google

the steam causing explosion so suddenly, that the fusible alloy had not time to melt or give way.

There are two, perhaps three, oxides of bismuth; the first and the third, or the sub-oxide and super-oxide, are merely objects of chemical curiosity. The oxide proper occurs native, and may be readily formed by exposing the metal to a red-white heat in a muffle, when it takes fire, burns with a faint blue flame, and sends off fumes which condense into a yellow pulverulent oxide. But an easier process than that now mentioned is to dissolve the bismuth in nitric acid, precipitate with water, and expose the precipitate to a red heat. The oxide thus obtained has a straw-yellow colour, and fuses at a high heat into an opaque glass of a dark-brown or black colour; but which becomes less opaque and yellow after it has cooled. Its specific gravity is as high as 8·211. It consists of 89·87 of metal and 10·13 of oxygen in 100 parts. The above precipitate, which is a sub-nitrate of bismuth, is called *pearl-white*, and is employed as a flux for certain enamels, as it augments their fusibility, imparting any colour to them. Hence it is used sometimes as a vehicle of the colours of other metallic oxides. When well washed, it is employed in gilding porcelain; being added in the proportion of one-fifteenth to the gold. But pearl-white is most used by ladies, as a cosmetic for giving a brilliant tint to a faded complexion. It is called *blanc de fard* by the French. If it contains, as bismuth often does, a little silver, it becomes grey or dingy coloured on exposure to light. When the oxide is prepared, by dropping the nitric solution into an alkaline lye in excess, if this precipitate is well washed and dried, it forms an excellent medicine; and is given, mixed with gum tragacanth, for the relief of cardialgia, or burning and spasmodic pains of the stomach.

Another sort of pearl-powder is prepared by adding a very dilute solution of common salt to the above nitric solution of bismuth, whereby a pulverulent sub-chloride of the metal is obtained in a light flocculent form. A similar powder of a mother-of pearl aspect may be formed by dropping dilute muriatic acid into the solution of nitrate of bismuth. The arsenic always present in the bismuth of commerce is converted by nitric acid into arsenic acid, which, forming an insoluble arseniate of bismuth, separates from the solution unless there be such an excess of nitric acid as to re-dissolve it. Hence the medicinal oxide, prepared from a rightly-made nitrate, can contain no arsenic. If we write with a pen dipped in that solution, the dry invisible traces will become legible on plunging the paper in water.

The nitrate of bismuth, mixed with a solution of tin and tartar, has been employed as a mordant for dyeing lilac and violet in calico printing.

Through the investigations which have been made by Dr. Faraday into the magnetic conditions of bodies, several new and remarkable conditions have been discovered. These may be familiarly explained, by stating that one class of bodies is influenced by magnets, as iron is, being *magnetic*. That is, if a bar of iron was hung up between the poles of a horse-shoe magnet, it would arrange itself along the line which unites the two poles; which line has been called the *axial line*. But if another class of bodies be selected, bismuth being at the head of this class, and suspended in the same way between the poles of the magnet, they arrange themselves across the axial line, or, as Faraday has termed it, *equatorially*, these bodies being called in distinction *dia-magnetic* bodies. See MAGNETISM, for a further account of these phenomena.

Bismuth may be regarded as the most remarkable of the dia-magnetic bodies, standing, indeed, at the head of the class, in the same way as iron does at the head of the magnetic order of substances.*

In Watts' "Dictionary of Chemistry" will be found various methods for the determination of bismuth. The following processes, however, appear so useful as to warrant their insertion in this place:—To detect small quantities of lead in bismuth, or in bismuth compounds, Chapman brings the somewhat flattened bead, reduced before the blowpipe, in contact with some moist basic nitrate of teroxide of bismuth, when, in a short time, in consequence of the reduction of the bismuth by the lead, arborescent sprigs of bismuth are formed around the test specimen. Since zinc and iron interfere with this reaction, they must be previously removed, the former by fusion with soda, the latter with soda and borax, in the reducing flame.

Lead and bismuth can easily be quantitatively separated from each other by the following method, proposed by Ullgren;—The solution of the two metals is precipitated by carbonate of ammonia, and the carbonates are then dissolved by acetic acid, and a blade of pure lead, the weight of which is ascertained beforehand, is plunged in the solution. This blade must be completely immersed in the liquor, The vessel is then corked up, and the experiment is left for several hours at rest.

* Consult De la Rive's Treatise on Electricity, translated by Charles V. Walker, F.R.S.

Digitized by Google

The lead precipitates the bismuth in the metallic form. When the whole of it is precipitated, the blade of lead is withdrawn, washed, dried, and weighed. The bismuth is collected on a filter, washed with distilled water which has been previously boiled, and cooled out of contact of the air; this metal is then treated with carbonate ammonia, and the precipitate which is left, after washing and ignition, is then weighed. The total loss of the metallic lead employed indicates how much oxide of lead must be subtracted from the total weight of the protoxide of lead obtained.

Oxide of bismuth can be separated, by means of sulphohydric acid, from all the oxides which cannot be precipitated from an acid solution by this reagent.

The mines of Schneeberg produce annually about 4000 kilogrammes; those of Johann-Georgenstadt and the cobalt mines of Saxony, about 600 kilogrammes—equal to about 10,500 avoirdupois pounds.

In 1844 bismuth was sold at from 10*d.* to 2*s.* the pound; in July 1861 it had reached the high price of 20*s.* the pound; since which time it has been gradually falling back, until at the end of 1865 the price was 11*s.* the pound. This variation has been thus accounted for. Up to 1844 a large quantity of bismuth was produced in this country from cobalt ores in the old way of refining, but a new method was then introduced which necessitated the loss of nearly all the bismuth. In 1845 there was a large demand for a composition to make rollers for calico printers, which advanced the price. In 1858 the supply began to fall off, and in 1861-2 there was an increased demand for this metal for medicinal purposes, but this is really very trifling. A company was formed in London, within the last few years, under the guidance of a German, who professed to have the secret of transmuting the baser metals into gold. This company had works in the Belvedere Road, Lambeth, and as bismuth was considered essential in the process, they bought all they could lay hands on. This, it is believed, more than anything led to the rapid increase in the price of the metal. Of course the concern failed, and the shareholders are said to be selling their bismuth very cautiously to realise as much as possible.

BISTRE. (*Bistre*, Fr.; *Bister*, Germ.) A brown colour which is used in water-colours, in the same way as China ink. It is prepared from wood-soot, that of beech being preferred. The most compact and best burned parcels of soot are collected from the chimney, pulverised, and passed through a silk sieve. This powder is infused in pure water, and stirred frequently with a glass rod, then allowed to settle, and the water decanted. If the salts are not all washed away, the process may be repeated with warm water. The paste is now to be poured into a long narrow vessel filled with water, stirred well, and left to settle for a few minutes, in order to let the grosser parts subside. The supernatant part is then to be poured off into a similar vessel. This process may be repeated twice or thrice, to obtain a very good bistre. At last the settled deposit is sufficiently fine, and, when freed from its superatant water, it is mixed with gum-water, moulded into proper cakes and dried. It s not used in oil painting, but has the same effect in water-colours as brown pink has in oil.

Dr. MacCulloch objects to soot as a source of bistre, both from the carelessness used in collecting it, and the uncertainty of tone and colour. If the liquids resembling tar, obtained from the distillation of wood, be again carefully distilled, water, acetic acid, and hydro-carbonous substances, as naphtha, pass over, and leave a residuum—brown or black, pitch-like, or brittle—according to the time and temperature employed; by prolonging the heat with care, the brittle substance becomes a powder. Dr. MacCulloch states that, by care, bistre from wood tar may be obtained, having the fine properties of sepia with greath depth of colour.

The remarkable bronze-like varnish, with almost a metallic lustre, seen upon the interior of highland cottages, are bistre deposits from the smoke of peat.

BITTER ALMOND OIL. See ALMOND OIL.

BITTER ALMOND WATER. Water containing the oil of bitter almonds in solution. It should be prepared by distillation from the bitter almonds. It is however frequently made by first rubbing the essential oil of bitter almonds with magnesia and mixing this with water, or a solution of the oil in spirits of wine is simply added to the water and they are shaken together.

BITTER PRINCIPLE. *Amer*, Fr.; *Bitterstoff*, Germ.) The "bitter principles" consist of bodies which may be extracted from vegetable productions by the agency of water, alcohol, or ether. These are not of much importance in the arts, with a few exceptions. *Lupulin.*—For example, the bitter principle of the hop is used for preserving beer.

Quassin is the bitter principle of quassia; *Absinthin*, that of wormwood; and *Gentianin*, that of gentian. These are sometimes substituted for the hop.

Digitized by Google

For particulars of these, and numerous other bitter principles, see *Watts' Dictionary of Chemistry.*

The following list gives the more important of the bitter substances which have been used in the arts and in medicine. See the articles respectively :—

Name.	Part employed.	Country.	Observations.
Quassia	Wood	Surinam, E. Indies	Powerfully bitter
Wormwood	Herb	Great Britain	Ditto
Aloe	Inspissated juice	South Africa	Ditto
Angustura	Bark	South America	Ditto
Orange	-	South of Europe	Aromatic bitter
Acorus	Root	Ditto	Ditto
Carduus benedictus	Herb	Greek Archipelago	
Cascarilla	Bark	Jamaica	Ditto
Centaury	Herb	Great Britain	
Camomile	Flowers	Ditto	Ditto
Colocynth	Fruit	Levant	Intolerably bitter
Colombo	Root	East Africa	Very bitter
Fumitory	Herb	Great Britain	Ditto
Gentiana lutea	Root	Switzerland	Ditto
Ground Ivy	Herb	Great Britain	Ditto
Walnut	Peel	Ditto	Ditto with tannin
Iceland moss	Plant	Ditto	Ditto with starch
Hops	Scales of the female flowers.	Ditto	Aromatic bitter
Milfoil	Herb flowers	Ditto	
Satyrion, large-leaved	Herb	Ditto	
Rhubarb	Root	China, Turkey	Disagreeable odr.
Rue	Herb	Great Britain	Bitter and sharp
Tansy	Herb flowers	Ditto	Bitter & offensive
Trefoil, bitter	Herb	Ditto	
Simarouba	Bark	Guiana	
Bryony	Root	Great Britain	Sharp, bitter, nauseous.
Coffee	Seeds	Arabia	Agreeable

BITTER SPAR. A carbonate of lime and a carbonate of magnesia. See DOLOMITE.

BITUMEN, or ASPHALTUM. (*Bitume*, Fr.; *Erdpech*, Germ.) A black substance found in the earth, externally not dissimilar to coal. It is composed of carbon, hydrogen, and oxygen, like organic bodies; but its origin is uncertain. It has seldom been observed among the primitive or older strata, but abundantly in the secondary and alluvial formations.

Bitumen comprises several distinct varieties, of which the two most important are asphaltum and naphtha.

Asphaltum is solid, and of a black, or brownish-black, colour, with a conchoidal brilliant fracture, sometimes called *Bitumen of Judea.*

Naphtha.—Liquid and colourless when pure, with a bituminous odour.

There are also the *earthy*, or *slaggy mineral pitch—petroleum*—a dark coloured fluid variety, containing much naphtha, and *maltha*, or *mineral tar.*

Bitumen in all its varieties was known to the ancients. It was used by them, combined with lime, in their buildings. Not only do we find the ruined walls of temples and palaces in the East, with the stones cemented with this material, but some of the old Roman castles in this country are found to hold bitumen in the cement by which their stones are secured. At Agrigentum it was burnt in lamps, and called "Sicilian oil." The Egyptians used it for embalming.—*Dana.*

Springs of which the waters contain a mixture of petroleum, and the various minerals allied to it—as bitumen, asphaltum, and pitch—are very numerous, and are, in many cases, undoubtedly connected with subterranean heat, by the agency of which organic remains undergo some of those remarkable changes, which ultimately result in the formation of coal. Within a few years many discoveries have been made of sources of fluid bitumen and petroleum in both the old and new worlds. The importance of these natural products renders it advisable to comprehend a description of

Digitized by Google

them under one general head. In one locality there are said to be 520 wells, which yield annually 400,000 hogsheads of petroleum. See PETROLEUM.

Fluid bitumen is seen to ooze from the bottom of the sea on both sides of the island of Trinidad, and to rise up to the surface of the water. It is stated that, about seventy years ago, a spot of land on the western side of Trinadad, nearly half-way between the capital and an Indian village, sank suddenly, and was immediately replaced by a small lake of pitch. In this way, probably, was formed the celebrated Great Pitch Lake. Sir Charles Lyell remarks:—"The Orinoco has for ages been rolling down great quantities of woody and vegetable bodies into the surrounding sea, where, by the influence of currents and eddies, they may be arrested and accumulated in particular places. The frequent occurrence of earthquakes, and other indications of volcanic action in those parts, lend countenance to the opinion that these vegetable substances may have undergone, by the agency of subterranean fire, those transformations or chemical changes which produce petroleum; and this may, by the same causes, be forced up to the surface, where, by exposure to the air, it becomes inspissated, and forms the different varieties of pure and earthy pitch, or asphaltum, so abundant in the island."

The Pitch Lake is one and a half miles in circumference; the bitumen is solid and cold near the shores, but gradually increases in temperature and softness towards the centre, where it is boiling. The solidified bitumen appears as if it had cooled, as the surface boiled, in large bubbles. The ascent to the lake from the sea, a distance of three-quarters of a mile, is covered with a hardened pitch, on which trees and vegetables flourish; and about Point la Braye, the masses of pitch look like black rocks among the foliage: the lake is underlaid by a bed of mineral coal.—*Manross*, quoted by Dana.

The Earl of Dundonald remarks, that vegetation contiguous to the lake of Trinidad is most luxuriant. The best pine-apples in the West Indies (called black pines) grow wild amid the pitch.

Asphaltum is abundant on the shores of the Dead Sea. It occurs in some of the mines of Derbyshire, and has been found in granite, with quartz and fluor spar, at Poldice, in Cornwall. There is a remarkable bituminous lime and sandstone of the region of Bechelbronn and Lobsann, in Alsace. From the observations of Daubrée, we learn that probably this bitumen has had its origin as an emanation from the interior of the earth; and indeed, in Alsace, with the great elevated fissure of the sandstone of the Vosges, a fissure which was certainly open before the deposit of the Trias, but was not yet closed during the tertiary epoch, affording during this latter, moreover, an opportunity for the deposition of spathic iron ore, iron pyrites, and heavy spar.—*Annales des Mines.*

Elastic Bitumen, called also mineral caoutchouc and *elaterite*, was first observed in Derbyshire, in the forsaken lead mine of Odin, by Dr. Lister, in 1673, who called it a subterranean fungus. It was afterwards described by Hatchett. The analysis of this variety, by Johnston, gave the following as its composition:—

Carbon 85·47 - - - Hydrogen 13·28.

Two descriptions of elastic bitumen were analysed by M. Henry, fils ("Ann. des Mines"). He states the English to have been in brown masses, slightly translucid, of a greenish colour, soft, elastic, burning with a white flame, and giving off a bituminous odour, and of specific gravity 0·9 to 1·23, and obtained from Derbyshire.

The French elastic bitumen generally resembled the English, excepting that it was opaque, and floated on water. It was discovered at the coal mines of Montrelais.

	English.	French.
Carbon	0·5225	0·5826
Hydrogen	0·0749	0·0489
Nitrogen	0·0015	0·0010
Oxygen	0·4011	0·3675
	1·0000	1·0000

Of ordinary bitumen, we have analyses of two specimens; one by Ebelmen, who obtained his sample from the Auvergne; and the other by Boussingault, which was a Peruvian specimen:—

	Auvergne.	Peruvian.
Carbon	76·13	88·63
Hydrogen	9·41	9·69
Oxygen	10·34	1·68
Nitrogen	2·32	
Ash	1·80	
	100·00	100·00

Digitized by Google

On the employment of bitumen for pavements, Dr. Ure has the following remarks:—It is a very remarkable fact, in the history of the useful arts, that asphalt, which was so generally employed as a solid and durable cement in the earliest constructions upon record, as in the walls of Babylon, should for so many thousand years have fallen well nigh into disuse among civilised nations. For there is certainly no class of mineral substances so well fitted as the bituminous, by their plasticity, fusibility tenacity, adhesiveness to surfaces, impenetrability by water, and unchangeableness in the atmosphere, to enter into the composition of terraces, foot-pavements, roofs, and every kind of hydraulic work. Bitumen, combined with calcareous earth, forms a compact semi-elastic solid which is not liable to suffer injury by the greatest alternations of frost and thaw, which often disintegrate in a few years the hardest stone, nor can it be ground to dust and worn away by the attrition of the feet of men and animals, as sandstone, flags, and even blocks of granite are. An asphalt pavement, rightly tempered in tenacity, solidity, and elasticity, seems to be incapable of suffering abrasion in the most crowded thoroughfares; a fact exemplified of late in a few places in London, but much more extensively, and for a much longer time, in Paris.

The great Place de la Concorde (formerly Place Louis Quinze) is covered with a beautiful mosaic pavement of asphalt; many of the promenades on the Boulevards, formerly so filthy in wet weather, are now covered with a thin bed of bituminous mastic, free alike from dust and mud; the foot-paths of the Pont Royal and Pont Carousel, and the areas of the great public slaughter-houses, have been for several years paved in a similar manner with perfect success. It is much to be regretted that the asphalt companies of London, made the ill-judged, and nearly abortive, attempt to pave the carriage-way near the east end of Oxford Street, and especially at a moist season, most unpropitious to the laying of bituminous mastic. Being formed of blocks not more than three or four inches thick, many of which contained much siliceous sand, such a pavement could not possibly resist the crash and vibration of many thousand heavy drays, waggons, and omnibuses daily rolling over it. This failure can afford, however, no argument against rightly-constructed foot pavements and terraces of asphalt. Numerous experiments and observations have led me to conclude that fossil bitumen possesses far more valuable properties for making a durable mastic than the solid pitch obtained by boiling wood or coal tar. The latter, when inspissated to a proper degree of hardness, becomes brittle, and may be readily crushed into powder; while the former, in like circumstances, retains sufficient tenacity to resist abrasion. Factitious tar and pitch being generated by the force of fire, seem to have a propensity to decompose by the joint agency of water and air, whereas mineral pitch has been known to remain for ages without alteration.

Bitumen alone is not so well adapted for making a substantial mastic as the native compound of bitumen and calcareous earth, which has been properly called asphaltic rock, of which the richest and most extensive mine is unquestionably that of the Val de Travers, in the canton of Neufchâtel. This interesting mineral deposit occurs in the Jurassic limestone formation, the equivalent of the English oolite. The mine is very accessible, and may be readily excavated by blasting with gunpowder. The stone is massive, of irregular fracture, of a liver-brown colour, and is interspersed with a few minute spangles of calcareous spar. Though it may be scratched with the nail, it is difficult to break by the hammer. When exposed to a very moderate, heat it exhales a fragrant ambrosial smell, a property which at once distinguishes it from all compounds of factitious bitumen. Its specific gravity is 2·114, water being 1000, being nearly the density of bricks. It may be most conveniently analysed by digesting it in successive portions of hot oil of turpentine, whereby it affords 80 parts of a white pulverulent carbonate of lime, and 20 parts of bitumen in 100. The asphalt rock of Val de Travers seems therefore to be far richer than that of Pyrimont, which, according to the statement in the specification of Claridge's patent of November, 1837, contains "carbonate of lime and bitumen in about the proportion of 90 parts of carbonate of lime to about 10 parts of bitumen."

The calcareous matter is so intimately combined and penetrated with the bitumen as to resist the action not only of air and water for any length of time, but even of muriatic acid; a circumstance partly due to the total absence of moisture in the mineral, but chiefly to the vast incumbent pressure under which the two materials have been incorporated in the bowels of the earth. It would indeed be a difficult matter to combine, by artificial methods, calcareous earth thus intimately with bitumen, and for this reason the mastics made in this way are found to be much more perishable. Many of the factitious asphalt cements contain a considerable quantity of siliceous sand, from which they derive the property of cracking and crumbling down when trodden upon. In fact, there seems to be so little attraction between siliceous

Digitized by Google

matter and bitumen, that their parts separate from each other by a very small disruptive force.

Since the asphalt rock of Val de Travers is naturally rich enough in concrete bitumen, it may be converted into a plastic workable mastic of excellent quality for foot pavements and hydraulic works at very little expense, merely by the addition of a very small quantity of mineral or coal tar, amounting to not more than 6 or 8 per cent. The union between these materials may be effected in an iron cauldron, by the application of a very moderate heat, as the asphalt bitumen readily coalesces with the tar into a tenacious solid.

The mode adopted for making the asphalt pavement at the Place de la Concorde in Paris was as follows:—The ground was made uniformly smooth, either in a horizontal plane or with a gentle slope to carry off the water; the curb-stones were then laid round the margin by the mason, more than 4 inches above the level of the ground. This hollow space was filled to a depth of 3 inches with concrete, containing about a sixth part of hydraulic lime, well pressed upon its bed. The surface was next smoothed with a thin coat of mortar. When the whole mass had become perfectly dry, the mosaic pattern was set out on the surface, the moulds being formed of flat iron bars, rings, &c., about half an inch thick, into which the fluid mastic was poured by ladles from a cauldron, and spread evenly over.

The mastic was made in the following way:—The asphalt rock was first of all roasted in an oven, about 10 feet long and 3 broad, in order to render it friable. The bottom of the oven was sheet iron, heated below by a brisk fire. A volatile matter exhaled, probably of the nature of naphtha, to the amount of one-fortieth the weight of asphalt; after roasting, the asphalt became so friable as to be easily reduced to powder, and passed through a sieve having meshes of about one-fourth of an inch square.

The bitumen destined to render the asphalt fusible and plastic was melted, in small quantities at a time, in an iron cauldron, and then the asphalt in powder was gradually stirred in to the amount of 12 or 13 times the weight of bitumen. When the mixture became fluid, nearly a bucketful of very small, clean gravel, previously heated apart, was stirred into it; and, as soon as the whole began to simmer with a treacly consistence it was fit for use. It was transported in buckets, and poured into the moulds.

For the reasons above assigned, I consider this addition of rounded, polished, siliceous stones to be very injudicious. If anything of the kind be wanted to give solidity to the pavement, it should be a granitic or hard calcareous sand, whose angular form will secure the cohesion of the mass. I conceive also, that liquid bitumen in moderate quantity should be used to give toughness to the asphaltic combination, and prevent its being pulverised and abraded by friction.

In the able report of the Bastenne and Gaujac Bitumen Company, drawn up by Messrs. Goldsmid and Russel, these gentlemen have made an interesting comparison between the properties of mineral tar and vegetable tar: the bitumen composed of the latter substance, including various modifications extracted from coal and gas, have, so far as they were able to ascertain, entirely failed. This bitumen, owing to the qualities and defects of vegetable tar, becomes soft at 115° of Fahrenheit's scale, and is brittle at the freezing point; while the bitumen into which mineral enters will sustain 170° of heat without injury. In the course of the winter, 1837-38, when the cold was at 14½° below zero C., the bitumen of Bastenne and Gaujac, with which one side of the Pont Neuf at Paris is paved, was not at all impaired, and would, apparently, have resisted any degree of cold; while that in some part of the Boulevard, which was composed of vegetable tar, cracked and opened in white fissures. The French Government, instructed by these experiments, has required, when any of the vegetable bitumens are laid, that the pavement should be an inch and a quarter thick; whereas, where the bitumen composed of mineral tar is used, a thickness of three-quarters of an inch is deemed sufficient. The pavement of the bonding warehouses at Bordeaux has been laid upwards of 15 years by the Bastenne Company, and is now in a condtion as perfect as when first formed. The reservoirs constructed to contain the waters of the Seine, at Batignolles, near Paris, have been mounted 6 years, and notwithstanding the intense cold of the winter of 1837, which froze the whole of their contents into one solid mass, and the perpetual water pressure to which they are exposed, they have not betrayed the slightest imperfection in any point. The repairs done to the ancient fortifications at Bayonne, have answered so well, that the Government many years ago entered into a very large contract with the company for additional works, while the whole of the arches of St. Germain and St. Cloud railways, and the pavements and floorings necessary for these works, have been laid with Bastenne bitumen.

The mineral tar in the mines of Bastenne and Gaujac, is easily separated from the earthy matter with which it is naturally mixed, by the process of boiling, and is then transported in barrels to Paris or London, being laid down in the latter place to the

Digitized by Google

company at 17*l.* per ton, in virtue of a monopoly of the article purchased by the company at a sum, it is said, of 8000*l.*

Mr. Harvey, the superintendent of the Bastenne Company, was good enough to supply me with various samples of mineral tar, bitumen, and asphaltic rock for analysis. The tar of Bastenne is an exceedingly viscid mass, without any earthy impurity. It has the consistence of bakers' dough at 60° of Fahrenheit; at 80° it yields to the slightest pressure of the finger; at 150° it resembles a soft extract; and at 212° it has the fluidity of molasses. It is admirably adapted to give plasticity to the calcareous asphalts.

A specimen of Egyptian asphalt which he brought me, gave, by analysis, the very same composition as the Val de Travers, namely, 80 per cent. of pure carbonate of lime, and 20 of bitumen. A specimen of mastic prepared in France was found to consist, in 100 parts, of 29 of bitumen, 52 of carbonate of lime, and 19 of siliceous sand. A portion of stone called the natural Bastenne rock afforded me 80 parts of gritty siliceous matter and 20 of thick tar. The Trinidad bitumen contains a considerable portion of foreign earthy matter; one specimen yielded me 25 per cent. of siliceous sand; a second, 28; a third, 20; and a fourth, 30: the remainder was pure pitch. One specimen of Egyptian bitumen, specific gravity 1·2, was found to be perfectly pure, for it dissolved in oil of turpentine without leaving any appreciable residuum.

Robinson's Parisian Bitumen Company use a mastic made with the pitch obtained from boiling coal tar mixed with chalk. Portions laid down by this company at Knightsbridge and at Brighton are said to have gone to pieces. The pavement laid down by them in Oxford Street, next Charles Street, has been taken up. Claridge's Company have laid down their mastic under the archway of the Horse-Guards, and in the carriage entrance at the Ordnance Office: the latter has cracked at the junction with the old pavement of Yorkshire curb-stone. The foot pavement laid down by Claridge's Company at Whitehall has stood well. The Bastenne Company has exhibited the best specimen of asphalt pavement in Oxford Street; they have laid down an excellent piece of foot-pavement near Northumberland House; a piece 40 feet by 7, on Blackfriars' Bridge; they have made a substantial job in paving 830 superficial feet in front of the guard-room at Woolwich, which, though much traversed by foot-passengers, and beat by the guard in grounding arms, remains sound; lastly, the floor of the stalls belonging to the cavalry barracks of the Blues at Knightsbridge is probably the best example of asphaltic pavement laid down in this country, as it has received no injury from the beating of the horses' feet.

As the specific gravity of properly made mastic is nearly double that of water, a cubic foot of it will weigh from 125 to 130 lbs.; and a square foot, three quarters of an inch thick, will weigh very nearly 8 pounds. A ton of it therefore will cover 280 square feet. The prices at which the Bastenne Bitumen Company sell their products are as follows:—

Pure Mineral tar, 24*l.* per ton, or 28*s.* per cwt.
Mastic, 8*l.* 8*s.* per ton, or 10*s.* per cwt.

		Side Pavement.	Roofs and Terraces.
From 50	to 100 feet,	1*s.* 3*d.* per foot.	- 1*s.* 6*d.* per foot.
100	250	1*s.* 1*d.* - -	- 1*s.* 4*d.*
250	500	11*d.* - -	- 1*s.* 1*d.*
500	750	10*d.* - -	- 1*s.* 0*d.*
750	1000	9*d.* - -	- 11*d.*
1000	2000	8*d.* - -	- 10*d.*
2000	5000	7*d.* - -	- 9*d.*

Where the work exceeds 5000 feet, contracts may be entered into. For filling up joints of brickwork, &c. 1*d.* to 1½*d.* per foot run, according to quantity.

These prices are calculated for half an inch thickness, at which rate a ton will cover 420 square feet.

As the Val de Travers Company engage to lay down their rich asphaltic rock in London at 5*l.* per ton, and as a mineral tar equal to that of Seissel may probably be had in England at one fourth of the price of that foreign article, they may afford to lay their mastic three quarters of an inch thick per the thousand feet, including a substratum of concrete, at a rate of fivepence a square foot instead of fifteenpence, being the rate charged under that condition by the Bastenne Company.—*Ure.*

It has been thought advisable to preserve these remarks on bitumen, although most of the trials which have been made in this country can only be regarded as failures. Under the combined influences of sunshine, frost, and rain, it undergoes a rapid disintegration. It may be that the proper proportions of the respective

Digitized by Google

ingredients may not have been maintained, and that further trials are advisable. At present, although bitumen is employed, and with seeming advantage as a cement between paving stones, there is no extension of its application in the formation of foot pavement as recommended.

BITUMINOUS COAL. Coal rich in bituminous matter. Pitch or caking coal, cherry coal, splint coal, cannel coal, cooking coal, and some others, are varieties of bituminous coal. See COAL.

BIXINE and BIXEINE. Two conditions of the colouring matter of Arnatto, according to Preisser. See ARNATTO.

BLACK AMBER. Pitch coal is so called by the amber diggers of Prussia, and it is manufactured by them into jet-like ornaments.

BLACK BAND. A variety of the carbonates of iron, to which attention was first called by Mr. Mushet, at the commencement of the present century. The iron manufacture of Scotland owes its present important position to the discovery of the value of the black band ironstone. This ore of iron is also found in several parts of the coal basin of South Wales, and in the north of Ireland. The chemical composition of the black band iron ores will be given in connection with that of other minerals of the same class. See IRON ORES.

BLACK CHALK. A kind of clay containing a large amount of carbon. It is found in Carnarvonshire and in the Island of Islay.

BLACK COAL. Slate coal, cannel coal, and foliated coal, were so called by Jameson and other mineralogists of his day.

BLACK COBALT OCHRE. See COBALT EARTHY.

BLACK COPPER. An impure black oxide of copper. See COPPER.

BLACK DYE. (*Teinte noire*, Fr.; *Schwartze Farbe*, Germ.) Textile fabrics are dyed by various processes, according to the quality of the black required, and the kind of stuff on which the dye is to be produced.

The following processes for dying woollen stuff will be found to produce excellent results. For 1 cwt. of cloth previously dyed blue: — There is put into a boiler of middle size, 18 lbs. of logwood, with the same quantity of Aleppo galls, the whole being enclosed in a bag; this is boiled in a sufficient quantity of water for 12 hours: one-third of this decoction is transferred into another boiler with 2 pounds of verdigris; and the stuff is passed through this solution, stirring it continually during two hours, taking care to keep the bath very hot without boiling. The stuff is then lifted out, another third of the bath is added to the boiler, along with 8 pounds of sulphate of iron or green vitriol. The fire is to be lowered while the sulphate dissolves, and the bath is allowed to cool for half an hour, after which the stuff is introduced, and well moved about for an hour, and then it is taken out to air. Lastly, the remaining third of the bath is added to the other two, taking care to squeeze the bag well. 18 or 22lbs. of sumach are thrown in; the whole is just brought to a boil, and then refreshed with a little cold water; 2 pounds more of sulphate of iron are added, after which the stuff is turned through for an hour. It is next washed, aired, and put again into the bath, stirring it continually for an hour. After this, it is carried to the river, washed well, and then fulled. Whenever the water runs off clear, a bath is prepared with weld, which is made to boil for an instant; and after refreshing the bath, the stuff is turned in to soften, and to render the black more fast. In this manner, a very beautiful black is obtained, without rendering the cloth too harsh.

Commonly, more simple processes are employed. Thus the blue cloth is simply turned through a bath of gall-nuts, where it is boiled for two hours. It is next passed through a bath of logwood and sulphate of iron for two hours, without boiling, after which it is washed and fulled. But in all cases the cloth, after passing through the blue vat, should be thoroughly washed, because the least remains of its alkalinity would injure the tone to be given in the black copper.

Hellot found that the dyeing might be performed in the following manner: — For 20 yards of dark blue cloth a bath is made of 2 lbs. of fustic (*Morus tinctoria*), 4½ lbs. of logwood, and 11 lbs. sumach. After boiling the cloth in it for three hours it is lifted out, 11 lbs. of sulphate of iron are thrown into the boiler, and the cloth is then passed through it during two hours. It is now aired, and put again in the bath for an hour. It is, lastly, washed and scoured. The black is less velvety than that by the preceding process. Experience convinced him that the maddering prescribed in the ancient regulations only gives a reddish cast to the black, which is obtained finer and more velvety without madder.

According to Lewis, the proportions which the English dyers most generally adopt are, for 112 lbs. of woollen cloth, previously dyed of a dark blue, about 5 lbs. of sulphate of iron, as much gall-nuts, and 30 lbs. of logwood. They begin by galling the

Digitized by Google

cloth; they then pass it through the decoction of logwood to which the sulphate of iron has been added.

When the cloth is completely dyed, it is washed in the river, and passed through the fulling-mill till the water runs off clear and colourless. Some persons recommend, for fine cloths, to full them with soap water. This operation requires an expert workman, who can free the cloth thoroughly from the soap. Several recommend, at its coming from the fulling, to pass the cloth through a bath of weld, with the view of giving softness and solidity to the black. Lewis says, that passing the cloth through weld, after it has been treated with soap, is absolutely useless, although it may be beneficial when this operation has been neglected.

The following German process is cheap and good. 100 lbs. of cloth or wool are put into the copper with sufficient water and 15 lbs. of Salzburgh vitriol (potash-sulphate of iron) and 5 lbs. of argol, heating the bath gradually to boiling, while the goods are well worked about for two hours, taking them out, and laying them in a cool place for twenty-four hours. They are then to be put in a lukewarm bath of from 25 to 30 lbs. of logwood, and 10 lbs. of fustic, and to be worked therein while it is made to boil during two hours. The goods are now removed, and there is put into the copper 1¼ lbs. of verdigris dissolved in vinegar; the goods are restored into the improved bath, and turned in it for half an hour, after which they are rinsed and dried.

The process for dyeing merinos black is, for 100 lbs. of them to put 10 lbs. of copperas into the bath of pure water, and to work therein for a quarter of an hour, as soon as it is tepid, one-third of the goods; then to replace that portion by the second, and after another quarter of an hour, to put in the last third. Each portion is to be laid aside to air in the cold. The bath being next heated to 140° F., the merinos are to be treated as above piecemeal; but the third time it is to be passed through the bath at a boiling heat. Being now well mordanted, the goods are laid aside to air till the following day. The copper being charged with water, 50 lbs. of ground logwood, and 2 lbs. of argol, and heated, the goods are to be passed through, while boiling, for half an hour. They are then rinsed.

Different operations may be distinguished in dying *silk* black; the boiling of the silk,—its galling,—the preparation of the bath,—the operation of dyeing,—the softening of the black.

Silk naturally contains a substance called gum, which gives it the stiffness and elasticity peculiar to it in its native state; but this adds nothing to the strength of the silk, which is then styled raw; it rather renders it, indeed, more apt to wear out by the stiffness which it communicates; and although raw silk more readily takes a black colour, yet the black is not so perfect in intensity, nor does it so well resist the reagents capable of dissolving the colouring particles, as silk which is scoured or deprived of its gum.

To cleanse silk intended for black, it is usually boiled four or five hours with one-fifth of its weight of white soap, after which it is carefully beetled and washed.

For the galling, nut-galls equal nearly to three-fourths of the weight of the silk are boiled during three or four hours; but on account of the price of Aleppo galls, more or less of the white gall-nuts, or of even an inferior kind called galon, berry or apple galls, are used. The proportion commonly employed at Paris is two parts of Aleppo galls to from eight to ten parts of galon. After the boiling, the galls are allowed to settle for about two hours. The silk is then plunged into the bath, and left in it from twelve to thirty-six hours, after which it is taken out and washed in the river.

Silk is capable of combining with quantities, more or less considerable, of the astringent principle; whence results a considerable increase of weight, not only from the weight of the astringent principle, but also from that of the colouring particles, which subsequently fix themselves in proportion to the quantity of the astringent principle which had entered into combination. Consequently, the processes are varied according to the degree of weight which it is wished to communicate to the silk; a circumstance requiring some illustration.

The commerce of silk goods is carried on in two ways: they are sold either by the weight, or by the surface, that is, by measure. Thus the trade of Tours was formerly distinguished from that of Lyons; the silks of the former being sold by weight, those of the latter by measure. It was therefore their interest to surcharge the weight at Tours, and, on the contrary, to be sparing of the dying ingredients at Lyons; whence came the distinction of light black and heavy black. At present, both methods of dyeing are practised at Lyons, the two modes of sale having been adopted there.

Silk loses nearly a fourth of its weight by a thorough boiling, and it resumes, in the light black dye, one half of this loss; but in the heavy black dye, it takes sometimes upwards of a fifth more than its primitive weight—a surcharge injurious to the beauty of the black and the durability of the stuff. The surcharged kind is denominated English black, because it is pretended that it was practised in England. Since silk

Digitized by Google

dyed with a great surcharge has not a beautiful black, it is usually destined for weft, and is blended with a warp dyed of a fine black.

The peculirity of the process for obtaining the heavy black consists in leaving the silk longer in the gall liquor, in repeating the galling, in passing the silk a greater number of times through the dye, and even letting it lie in it for some time. The first galling is usually made with galls which have served for a preceding operation, and fresh gall-nuts are employed for the second. But these methods would not be sufficient for giving a great surcharge, such as is found in what is called the English black. To give it this weight, the silk is galled without being ungummed; and, on coming out of the galls, it is rendered supple by being worked on the jack and pin.

The silk dyers keep a black vat, and its very complex composition varies in different dye-houses. These vats are commonly established for many years; and when their black dye is exhausted it is renovated by what is called in France a *brevet*. When the deposit which has accumulated in it is too great, it is taken out, so that at the end of a certain time nothing remains of the several ingredients which composed the primitive bath, but which are not employed in the brevet.

For the dyeing of raw silk black, it is "galled" cold, with the bath of galls which has already served for the black of boiled silk. For this purpose, silk, in its native yellow colour, is made choice of. It should be remarked, that when it is desired to preserve a portion of the gum of the silk, which is afterwards made flexible, the galling is given with the *hot* bath of gall-nuts in the ordinary manner. But here, where the whole gum of the silk, and its concomitant elasticity, are to be preserved, the galling is made *cold*. If the infusion of galls be weak, the silk is left in it for several days.

Silk thus prepared and washed takes very easily the black dye, and the rinsing in a little water, to which sulphate of iron may be added, is sufficient. The dye is made cold; but, according to the greater or less strength of the rinsings, it requires more or less time. Occasionally three or four days are necessary; after which it is washed, it is beetled once or twice, and it is then dried without wringing, to avoid softening.

Any of these processes will produce a black without the goods being previously dyed blue, but generally when such common blacks, as they are technically termed, are dyed, more of the dye drugs are required, and also a little modification in the operations. Sometimes they are "bottomed" or "rooted," by first working them in a decoction of walnut-husks, and then dyed as above;—or, a good black may be dyed without any previous rooting, by working 1 cwt. of the stuff, for an hour, at a heat of 190°, in 6 lbs. of camwood: 6 lbs. of copperas are then added, and the stuff worked for another hour; the fire is then withdrawn from the boiler, and the stuff allowed to remain in the liquor for 10 or 12 hours. It is washed from this, and worked in a second bath with 60 lbs. of logwood for an hour and a half, then add 3 lbs. of copperas, and after another hour's working, it is washed.

Bichromate of potash is also used for dying blacks upon wool. A very good colour may be dyed direct by working, for 2 hours, 1 cwt. of the stuff in a solution of 5 lbs. of bichromate, 4 lbs. of alum, and 3 lbs. of fustic, then exposing it for an hour and washing well. It is again wrought for 2 hours in a second bath, made up with 45 lbs. of logwood, 3 lbs. of barwood or camwood, and 3 lbs. of fustic; then adding 3 lbs. of copperas, and after half an hour's longer working, the dye is finished. A much cheaper blue black than that produced by previously dyeing the stuff in the indigo vat, is obtained by using a Prussian blue, then proceeding as directed above.

Raw silk may be more quickly dyed by shaking it round the rods in the cold bath after the galling, airing it, and repeating these manipulations several times, after which it is washed and dried.

Macquer describes a more simple process for the black by which velvet is dyed at Genoa: and he says that this process, rendered still simpler, has had complete success at Tours. The following is his description.

For 1 cwt. (50 kilogrammes) silk, 22 lbs. (11 kilogrammes) of Aleppo galls, in powder, are boiled for an hour in a sufficient quantity of water. The bath is allowed to settle till the galls have fallen to the bottom of the boiler, from which they are withdrawn; after which 32 lbs. of copperas are introduced, and 22 lbs. of country gum, put into a kind of two-handled colander, pierced everywhere with holes. This kettle is suspended by two rods in the boiler, so as not to reach the bottom. The gum is left to dissolve for about an hour, stirring it from time to time. If, after this time, some gum remains in the kettle, it is a proof that the bath, which contains two hogsheads, has taken as much of it as is necessary. If, on the contrary, the whole gum is dissolved, from 1 to 4 lbs. more may be added. This colander is left constantly suspended in the boiler, from which it is removed only when the dyeing is going on;

Digitized by Google

and afterwards it is replaced. During all these operations the boiler must be kept hot, but without boiling. The galling of the silk is performed with one-third of Aleppo galls. The silk is left in it for six hours the first time, then for twelve hours. The rest, *secundum artem*.

Lewis states that he has repeated this process in the small way; and that, by adding sulphate of iron progressively, and repeating the immersion of the silk a great number of times, he eventually obtained a fine black.

Astringents differ from one another as to the quantity of the principle which enters into combination with the oxide of iron. Hence, the proportion of the sulphate, or of any other salt of iron, and that of the astringents, should vary according to the astringents made use of, and according to their respective quantities. Gall-nut is the substance which contains most of the astringent principle; sumach, which seems second to it in this respect, throws down (decomposes), however, only half as much sulphate of iron.

The most suitable proportion of sulphate of iron appears to be that which corresponds to the quantity of the astringent matter, so that the whole iron precipitable by the astringent may be thrown down, and the whole astringent principle may be taken up in combination with the iron. As it is not possible, however, to arrive at such precision, it is better that the sulphate of iron should predominate, because the astringent, when in excess, counteracts the precipitation of the black colouring particles, and has the property of even dissolving them.

This action of the astringent is such that, if a pattern of black cloth be boiled with gall-nuts, it is reducible to grey. An observation of Lewis may thence be explained. If cloth be turned several times through the colouring bath, after it has taken a good black colour, instead of obtaining more body, it is weakened, and becomes brownish. Too considerable a quantity of the ingredients produces the same effect; to which the sulphuric acid, set at liberty by the precipitation of the oxide of iron, contributes.

It is merely the highly oxidised sulphate which is decomposed by the astringent; whence it appears that the sulphate will produce a different effect according to its state of oxidisement, and call for other proportions. Some advise, therefore, to follow the method of Proust, employing it in the oxidised state; but in this case it is only partially decomposed, and another part is brought, by the action of the astringent, into the lower degree of oxidisement.

The particles precipitated by the mixture of an astringent and sulphate of iron have not at first a deep colour; but they pass to a black by contact of air while they are moist.

Black dye is only a very condensed colour, and it assumes more intensity from the mixture of different colours likewise deep. It is for this reason advantageous to unite several astringents, each combination of which produces a different shade. But blue appears the colour most conducive to this effect, and it corrects the tendency to dun, which is remarked in the black produced on stuffs by the other astringents.

On this property is founded the practice of giving a blue ground to black cloths, which acquire more beauty and solidity the deeper the blue. Another advantage of this practice is to diminish the quantity of sulphuric acid which is necessarily disengaged by the precipitation of the black particles, and which would not only counteract their fixation, but would further weaken the stuff, and give it harshness. For common stuffs, a portion of the effect of the blue ground is produced by the rooting.

The mixture of logwood with astringents contributes to the beauty of the black in a twofold way. It produces molecules of a hue different from what the astringents do, and particularly blue molecules, with the acetate of copper, commonly employed in the black dyes; which appears to be more useful the more acetate the verdigris made use of contains.

The boil of weld by which the dye of black cloth is frequently finished, may also contribute to its beauty, by the shade peculiar to its combination. It has, moreover, the advantage of giving softness to the stuffs.

The processes that are employed for wool yield, according to the observation of Lewis, only a rusty black to silk; and cotton is hardly dyed by the processes proper for wool and silk. Let us endeavour to ascertain the conditions which these three varieties of dyeing demand.

Wool has a great tendency to combine with colouring substances; but its physical nature requires its combinations to be made in general at a high temperature. The combination of the black molecules may therefore be directly effected in a bath, in proportion as they form; and, if the operation be prolonged by subdividing it, it is only with the view of changing the necessary oxidisement of the sulphate and augmenting that of the colouring particles themselves.

Silk has not the same disposition to unite with the black particles. It seems to be

Digitized by Google

assisted by the agency of the tannin, with which it is previously impregnated, especially after it has been scoured. A very deep black may be obtained upon 100 lbs. of silk, by working it for two hours in a solution of 20 lbs. of copperas and 3 pints of nitrate of iron. Wash from this thoroughly, and then wash for two hours more in a decoction of 100 lbs. of logwood and 20 lbs. of fustic. Lift up, and add to the bath a solution of 3 lbs. of copperas, and work half an hour longer, and wash. A beautiful rich blue black is produced by dyeing the silk a deep royal blue, then working for an hour in a solution of copperas (2 ounces to the pound of silk), washing from this, and working in a bath of logwood, using half a pound to each pound of silk, and adding, after an hour's working, a few ounces of copperas; working half an hour longer, and finishing.

Cotton has no affinity for the black dye, and has always to be impregnated or combined with astringent substances, in order to produce the dye. A good deep black will be imparted to 100 lbs. of cotton by steeping it in a decoction of 30 lbs. of sumach, at a boiling heat, and allowing it to stand till perfectly cold; then passing it through lime water, and, immediately after this, working for an hour in a solution of 20 lbs. of copperas. After this, expose for an hour to the air; then pass through lime water again, and wash and work for an hour in a bath of 30 lbs. of logwood and 10 lbs. of fustic; lift, and add 2 lbs. of copperas, and work 30 minutes longer, and finish.

BLACK FLUX. A mixture of charcoal and carbonate of potash, obtained by calcining bitartrate of potash. Generally, the crude tartar of commerce is used.

BLACK HÆMATITE. An ore of MANGANESE, (*which see*).

BLACKING FOR SHOES. (*Cirage des bottes*, Fr.; *Schuhschwärze*, Germ.) Blacking consists of a black colouring matter, generally bone black, and substances that acquire a gloss by friction, such as sugar and oil. The usual method is to mix the bone black with sperm oil; sugar, or molasses, with a little vinegar, is then well stirred in, and strong sulphuric acid is added gradually. The acid produces sulphate of lime and acid phosphate of lime, which is soluble: a tenacious paste is formed by these ingredients, which can be smoothly spread; the oil serving to render the leather pliable. This forms a liquid blacking. Paste blacking contains less vinegar. In Germany, according to Liebig, blacking is made by mixing bone black with half its weight of molasses, and one eighth of its weight of hydrochloric acid, and one-fourth of its weight of strong sulphuric acid, mixing with water, to form an unctuous paste. The following method for making liquid and paste blacking is given by William Bryant and Edward James: 18 ounces of caoutchouc are to be dissolved in about 9 lbs. of hot rape oil. To this solution 60 lbs. of fine ivory black and 45 lbs. of molasses are to be added, along with 1 lb. of finely ground gum arabic, previously dissolved in 20 gallons of vinegar of strength No. 24. These mixed ingredients are to be finely triturated in a paint mill till the mixture becomes perfectly smooth. To this varnish 12 lbs. of sulphuric acid are to be now added in small successive quantities, with powerful stirring for half an hour. The blacking thus compounded is allowed to stand for 14 days, it being stirred half an hour daily; at the end of which time 3 lbs. of finely ground gum arabic are added; after which the stirring is repeated half an hour every day for fourteen days longer, when the liquid blacking is ready for use. In making the paste blacking, the patentees prescribe the above quantity of india-rubber oil, ivory black, molasses, and gum arabic, the latter being dissolved in only 12 lbs of vinegar. These ingredients are to be well mixed and then ground together in a mill till they form a perfectly smooth paste. To this paste 12 lbs. of sulphuric acid are to be added in small quantities at a time, with powerful stirring, which is to be continued for half an hour after the last portion of the acid has been introduced. This paste will be found fit for use in about seven days.

Of blacking, in 1864, we *exported* as follows:—British Possessions in South Africa, 2,047*l.*; Bombay and Sinde and Madras, 1,931*l.*; Bengal and Pegu, Singapore, and Ceylon, 1,381*l.*; Australia, 11,276*l.*; British West India Islands, and British Guiana, 2,714*l.*; other countries, 5,354*l.*; making a total of 24,721*l.*

BLACK JACK. The miner's name for blende, or sulphide of zinc. See ZINC.

BLACK-LEAD PENCILS. See PENCIL MANUFACTURE.

BLACK LEAD. The common name of PLUMBAGO or GRAPHITE (*which see.*)

BLACK TIN. The miner's name for tin ore ready for the smelter.

BLACK WADD. One of the ores of manganese. See MANGANESE.

BLADDER. (*Vessie*, Fr.; *Blase*, Germ.) A bag or sack, in animals, which serves as the receptacle of some secreted fluid. Bladders are chiefly employed for securing jars, bottles, &c. In addition to the very large quantities which are obtained in this country, we *imported*, in 1863, 2,051,680; and in 1864, 1,653,548.

BLANKETS. (*Blanchet*, Fr.) A cover for a bed made of coarse wool loosely

Digitized by Google

woven. Among printers the woollen cloth which is placed between the tympans is called a *blanket*. See WOOLLEN MANUFACTURES.

BLAST. The current of air driven into a furnace; it may be either cold or hot air. See HOT BLAST.

BLAST FURNACE. A furnace into which air is forcibly blown. See IRON-METALLURGY.

BLAST HOLES. *A mining term.* The holes through which the water enters the bottom of a pump in the mines.

BLASTING. The process of rending rocks by the use of some explosive compound, as gunpowder. See MINING.

BLEACHING (*Blanchement*, Fr.; *Bleichen*, Germ.) is the process by which the textile filaments, cotton, flax, hemp, wool, silk, and the cloths made of them, as well as various vegetable and animal substances, are deprived of their natural colour, and rendered nearly or altogether white. The term bleaching comes from the French verb *blanchir*, to whiten.

In ancient times bleaching, washing, and fulling were not distinctly separated; they were all practised. We read in the Scriptures of "fine linen, white and clean," and in Greek authors, of "raw linen," of which towels were made, as well as of "shining fine linen," for the same purpose, thus at once making the distinction.* The pure white was apparently not so common as with us. A pure surface was, however, needful, in order to produce good colours, for which we are bound to give the ancients credit, as we know they were acquainted with them as pigments, and are not, therefore, to be suspected of being unable to distinguish good from bad when transferred to textile fabrics. As their words for white and for colour are plain enough in general, we must conclude that they had the power of obtaining both fine whites and finely-dyed cloth; handkerchiefs were tied about the head in various ways, as now in Lancashire, white and coloured. The Babylonians wore white cloaks.† By their method of washing, the discovery of bleaching was inevitable, the cloth being washed several times and dried in the sun. But it was not left in the state of an accident only; the word *insolation* shows that the effects of the sun had been observed and classified, and this is stated to have been the chief method, as it is now, of bleaching wax. Egypt and the East seem to have been the teachers in bleaching. From Egypt were obtained alkalis, and soda mixed with lime. Both lime and alkalis were used in the process. Potash, or the ashes of plants, was also used, and soap-plants, in all probability of various kinds, as it is not easy to decide on one. The *Saponaria officinalis*, soap-wort, is still used, and the wake-robin or cuckowpint, *Arum maculatum;* the *Gypsophila Struthium* was considered by Linnæus to be the ancient one, and is still called *Lanaria* in Italy. Nor do we require to suppose that this plant was first incinerated, as has been supposed, in the case of Borith, the fullers' soap of the Bible. Vegetable decoctions are still used in China to bleach silk, and in France even now; some have been patented within a few years in England, although little used. The Latin method of obtaining white cloth is very well preserved, and as they got their caustic soda from Egypt, it is probable that they got also their process; nor is it at all likely that Nicias of Megara invented fulling, as it was evidently well known before the existence of any well-founded Greek tradition. Pictures exist in Pompeii of men dancing the fullers' dance, or stamping cloth with their feet, as women now practise in Scotland. Moderate sized tubs were used: the clothes seem occasionally to have been taken up by the hand, in order that they might be well turned. They were then treated with ammoniacal liquors and soda. Urine was highly esteemed for the purpose. The fullers obtained it by placing vessels at the corners of the streets, which were removed when filled; this practice acting at the same time as a sanitary precaution. The same method of carefully collecting this fluid, or "old lant," as it is called, exists in the woollen districts of Lancashire and Yorkshire. A tax was laid on it by Vespasian, so that the fullers might not receive it without payment. The cloth was then sulphured, if it was intended to be white: this process was performed under a conical frame like a small tent, the cloth being spread round the frame, and a vessel of sulphur burned under it.‡ Potters' earth was then used according to circumstances. The fuller seems to have been a bleacher as well as domestic laundryman. He had, therefore, white as well as coloured dresses to deal with. For the first he used Sardinian potters' earth, which could not be employed for prints or such colours as easily changed (*versicolores*). For coloured cloth, sulphur was not used by the potters, but fine Cimolian earth. The potters' earth seems to have been used both before and after sulphuring, according to circumstances. This second process is allied partly to our mode of chalking white dresses, still somewhat in use; but more strongly allied to what is called dressing, stiffening, and finishing. Pliny says that the Umbrian earth was only used for polishing vestments, also that it

* Philoxenus in Athenæus, ix. 77. † Herod., i. 195.
‡ Pompeii drawings, see Smith's Dict., Lardner's Cyclopædia.

Digitized by Google

softened fine colours and gave lustre to those that were faded in sulphuring. This shows that they used sulphur in washing, and not merely in preparing for the bleaching process.* They then gave a finish of very fine clay, gypsum being used instead of clay in Greece, as amongst ourselves. If a nap was wanted, it was raised after sulphuring, by brushing, by carding, by the skin of a hedgehog, or by thistles and teasels. They seem to have got a fine nap on their woollen cloth, as garments of this kind once washed were considered less valuable, as would be the case with our broadcloth for outer dresses. Wool for under dresses could not have been injured by one washing, especially as the *fullones* seem in old Italy to have been more attentive than our washerwomen, and to have formed a college, or at least a guild. The washing was seldom done at home, except in large establishments, especially in the country. Whiteness was very much esteemed, and great pains taken to obtain it. Coloured cloth seems a later invention. This love of whiteness was so great, that those who were too poor to have their cloths fulled, rubbed them with a white fullers' earth, so as on holidays to appear clean and bright.

Clothes in ancient times required a good deal of washing, so much oil being used; alkalis alone could remove this, and people that used soft feather-beds, and pillows that sank under the weight of the head, would not be behind in having them also whitened. In India the mode was different from that used in the western world. The preparation for printing was a series of washings, beatings, and exposure to the sun, as well as wearing next the skin, and steeping in goats' and sheep's dung. Wearing next the skin was probably instead of the oiling process in Turkey red. Bleaching with boiled rice water was practised in India. In Jamaica the aloe was used, and in China a bean is employed: this is smaller than the Turkey bean; five parts are used to five of salt, six of flour, and twenty-five of water: this is for raw silk. The exact action of the vegetable method on the colouring matter is not well known; but it must not be iguored. The decompositions of fermentation and putrefaction have a great power of propagating themselves; we can, in fact, readily conceive the decomposition of gums by such means, provided they are not resinous matters, consisting chiefly of carbon and hydrogen. Mucilaginous plants are even now in some places used, and have been recommended also in the most modern times.† It is, therefore, not easy to see why so much difficulty has been raised amongst chemical historians as to the use of plants in washing and bleaching. Vegetable products, such as oatmeal, &c., have powerful detergent qualities, and leave the skin exceedingly soft. In general we may conclude that these vegetable infusions and alkalis were the means of bleaching in ancient times, the influence of the sun being also employed. At present, alkalis are more generally used. Washing with alkalis is really the most important part of the process. The soaps of the ancients were also vegetable or alkaline, or both; they were a σμῆγμα, but not a true soap, in general at least.—*Paulus Ægineta*, Notes by Adams.

Until modern times no improvements of great importance took place affecting the principles of bleaching; and even now the only modern changes consist in the introduction of chlorine and machinery, to which may be added the greater abundance of soap. In the last century, Holland obtained the best name for bleaching. The process passed then to Ireland and Scotland, and thence into England. It was even customary to send goods from this country to be bleached in Holland. The first attempt to vie with Holland was made in Scotland in 1749.

We find in the patent lists many crude efforts made to improve the art. Alkalis and acids are recommended in various forms, and such a variety of substances as tartar, saltpetre, sal ammoniac, marl, loam, clay, mud, chalk, fullers' earth, oyster shells, soot, turf, and ashes, with a great variety of washing machines.

The value of the plan in Holland was ascribed to the ashes of Muscovy (Russian potash) and the sea water; but it is evident, from the description, that it was not sea, but very pure fresh water which was used. The Dutch process is thus described:—"When a piece of linen is to be bleached, it is in the first place steeped in a lixivium, or lye, where other cloth has been trod; afterwards it is trod in a new lye of ashes poured upon it boiling hot. This is boiled in large copper caldrons, and is never poured upon the cloth till it is as clear as wine. The linen is left eight days in this lye, after which it is washed and pressed in this manner:—They empty some buckets of butter-milk into wooden vessels fixed in the ground; then they throw in a piece of linen, which three men tread with their feet as much as possible. Afterwards they pour in more butter-milk, and then another piece of cloth, proceeding thus alternately till the vessels are nearly filled, when they lay planks over the linen, upon which they raise a large round piece of wood, or great stake, touching the lower side of a beam, between which and the stake they drive wedges to press the cloth. Six or seven days after they take the cloth out of these vessels, and if it be not white

* Nat. Hist. xxxv., 57, &c.

† See Globert's process.

Digitized by Google

enough, they steep it as we have described above. Afterwards it is washed and spread out upon the ground to bleach. It must be remarked that after every dipping the cloth is washed first with black soap, then with clear water, and after each of these operations it is wrung by means of a machine that turns by means of a wheel. .... The whitening grounds are cut with canals in some places, that there may be no trouble of fetching water from a distance. The cloth is watered with long narrow shovels made in shape of a scythe. The water of these canals comes from the dams, and it is that which contributes most to the lustre of the Dutch cloth. To prevent the water from becoming thick and muddy, they are extremely careful in cleaning these canals. The washing tubs are built with bricks, with two trap-doors or sluices for admitting or excluding the water according as it is necessary." — *Select Essays*, quoted by Parke.

The chief advantage here consists in the facility of obtaining soap, which in ancient times was either scarce or badly made. This improvement began to be more and more used from the time of its earliest introduction. Modern times have begun to exclude it to a great extent again, finding it so much cheaper to work with the alkali alone without combining it with fatty matter.

The process of bleaching then became a series of operations, consisting of, 1st, steeping in water for about three or four days, or in weak alkali for forty-eight hours. 2nd, boiling in an alkaline lye, or, in other words, *bucking* or bowking: in this operation the hot lye was poured on the cloth; it then ran through it, was drawn off by a tap below, and then pumped up again. 3rd, crofting, or exposure to sun and air on the grass. 4th, souring: this was done by the butter-milk; it lasted several weeks. These operations were repeated four or five times, or until the goods were pure. The whole lasted from March to September. The best months for crofting were found to be March, April, and May. It was not known that it was the acid of the butter-milk which acted; but when sulphuric acid became cheaper, Dr. Home applied it instead of butter-milk, and caused a great revolution in bleaching, as the souring could now be done in a day which before had occupied weeks, exposing the cloth to much danger of decay by decomposition or putrefaction. Great fear was expressed in the country lest the vitriol should burn the cloth, when Dr. Home stated that he had kept linen in acid of the required dilution for some months without having it injured. Berthollet also said that the acid made a better white.

But in 1784 Berthollet made known some investigations on chlorine, and in 1787 communicated them to the French Academy. By these investigations it was found that chlorine had the power of destroying colouring matters. The use of chlorine was brought to this country by the Duke of Gordon and Professor Copeland of Aberdeen, who then gave the process to be carried out by Messrs. Milnes, of the firm Gordon, Barron, and Co., of that place. In this discovery the theoretical portion is due, first, to Scheele, who discovered the chlorine; and, secondly, to Berthollet, who discovered the peculiar property. The practical mode of effecting the object is the part which we claim; but it consists of such a long series of expensive trials and ingenious contrivances, that it will take a much longer time to describe them than to give the first idea only. As the invention was at first applied only to cotton, which at that period was rising into importance, we shall begin the description of modern bleaching with the mode adopted for that material.

James Watt at the date given was in intimate communication with Berthollet, and did not rest until he had made the process successful at the bleach-field of Macgregor, near Glasgow, requesting the results to be communicated to a meeting of manufacturers to be called together at Manchester;—so quick was Watt to see what would be for the permanent interest of a country, and so ready to act on it! Dr. Henry did much to make it known to the manufacturers about Manchester. This is one of the early instances of scientific men being directly applied to by manufacturers for assistance — an application seldom made unless under great difficulties.

The principal bleaching agents, besides alkalis and other matters mentioned, are chlorine, sulphurous acid, and the combined action of air and light. These are destroyers of colour. The chief agents for removing colours which do not require to be previously decomposed, are alkalis. The principal amount of the colouring materials are removed from the cloth by washing with alkalis: the last tint of whiteness is not removable by this means, and it is to this last tint that the word bleaching has been more definitely applied.

In 1798, Charles Tennant, of Glasgow, introduced chloride of lime, which is preferred above all other compounds to the present day as a means of applying chlorine.

The true theory of bleaching has not been entirely agreed upon, but there can be little doubt of the principal operations. It is known that oxygen deprives substances of colour; this may be performed by many high oxides; by nitric acid, manganic and chromic acids, chlorous acid, and even lower oxides which hold their oxygen lightly, as hypochlorous acid. The same effect may be produced by chlorine,

Digitized by Google

bromine, and iodine. It has been said that chlorine unites with the hydrogen of the water which is present, gives off oxygen, and so acts just as oxygen would. Davy found that it would not act in dry air, so that water was needful: but Dr. Wilson found that it would act, although slowly, in dry air, if exposed to the rays of the sun This might show that water is not necessary in order to supply oxygen, but only to allow the chlorine to be brought into thorough contact with the colouring matter. It has also been supposed that the chlorine removes the hydrogen, or, rather, simply takes its place by an act of substitution. Now, whether the chlorine or the liberated oxygen removes the hydrogen, the result will be the same — the destruction of the compound. Chlorine so readily performs these changes, that we should at once decide on calling it the active agent, were it not for the fact that oxygen acts so readily, even when chlorine is not present: for example, peroxide of hydrogen, as well as the oxides just mentioned, and ozone also, which has no chlorine to help it. It is, then, certain that oxidation bleaches; and it is certain that dehydration bleaches, if performed by chlorine, and that the sun aids it by its active rays. We know also that water aids it: water aids bleaching or oxidation by air, partly because it contains air in solution. It aids also the bleaching performed by solutions in contact with porous bodies, because these bodies have a power of condensing gases in their pores and of compelling combinations. The next question is, Does it aid the bleaching by chlorine in the same way, by assisting the union mechanically, or by decomposing water? Chlorine acts slowly, unless water be present. The theory, therefore, does not demand the decomposition of water, and the known powerful affinities of chlorine do not require to be supplemented by oxygen. But, in order to see exactly the state of the case, let us look at the action of chlorine in hypochlorites or in chloride of lime, and we find that it is a direct oxidation. We obtain by it peroxides of metals, and not chlorides. Here we seem to be taught directly by experiment, that bleaching by hypochlorites is an oxidation of the colouring matter. Bleaching by moist chlorine may therefore be looked on as the same; indeed, we oxidise by it; but in such cases we may obtain the base at the same time united to chlorine, giving another turn to the question, as Kane showed. The oxidation theory, therefore, seems to be sufficient when water is present. We are, however, finally to deal with dry chlorine in the sun; and in that case it is fair to conclude that it acts by direct combination with hydrogen or the colouring matter or both. We have, then, two modes of bleaching; but the usual mode in the air becomes by that explanation an oxidation, and the direct action of chlorine obtainable only with difficulty. When sulphurous acid is used, another phenomenon may be looked for, as we find a substance whose chief quality is that of deoxidising. The removal of oxygen also decomposes bodies, and sulphuretted hydrogen can scarcely be supposed to act in any other way. Sulphurous acid, when it decomposes sulphuretted hydrogen, really acts as an oxidising agent, and we can therefore imagine it as such in the bleaching process. Investigation has not told us if it enters into combination as SO^2, and, like oxygen, destroys colour, altering the compound by inserting itself.

We may fairly conclude that the processes by chlorine and sulphurous acid are performed in a manner as different as the mode in which a salt of ammonia acts on chlorine or an oxacid, or, in Dr. Wilson's general terms, "Specific differences may be expected to occur with all the gases named, as to their action on any one colouring matter, and with different colouring matters, as to their deportment with any one of the gases." — *Trans. R. S. E.*, 1848.

It has been attempted to introduce manganates, chromates, chlorates, chlorochromic acid, and sulphites, but without success, as bleaching agents.

Bleaching of Cotton.

Substances dealt with in Bleaching.—The object of bleaching is to separate from the textile fibre all the substances which may mask its intrinsic whiteness, or which, in the course of dyeing or printing, may produce injurious effects on the colours. The substances present in cotton goods, and to be treated in bleaching, are as follows:—

a. The resinous matter natural to the filaments.
b. The colouring matter of the plant.
c. The paste of the weaver.
d. A fatty matter.
e. A cupreous soap.
f. A calcareous soap.
g. The filth of the hands.
h. Iron rust, earthy matters, and dust.
i. The cotton fibre itself.
j. The carbonaceous matter caused by singeing.
k. The seed-vessels.

Digitized by Google

a. Cotton is covered with a resinous matter, which obstructs its absorption of moisture. This alone would prevent it receiving colour, and it is known that if this could be removed, some of the darker colours could be dyed without any bleaching, providing also the impurities arising from manipulation were absent, although the finest colours could not be produced in this manner on cotton in general. M. Bolly, however, has proposed the use of acetic acid, or of a sour bran liquor, as substances which are absorbed by the cotton and render it capable of absorbing colour or solutions. The matter which prevents the moistening has not been thoroughly examined. It is found to be soluble in alcohol and ether, and some of it in turpentine: it is therefore called a resinous, waxy, or fatty body. It is dissolved by alkalis, and thrown down by acids in strong solutions. The alcohol solution leaves thin yellowish scales, which may be dissolved in acid or even in much water. But information concerning it is indistinct. For a long time the process commenced by removing this resin by means of alkali. It is called scouring.

b. The whole colouring matter is not soluble in alkalis, but it becomes so after being altered by the action of chlorine, or by insolation or croft bleaching. It is not even capable of being bleached, or at least but slowly, unless it be previously acted on by alkalis. The amount of colour is much less with cotton than linen. The former is often so white naturally, that washing and bleaching might be dispensed with, were it not for the substances which, during its manufacture, come in contact with it, if the gum were removed which prevents the moistening. The alkaline solution from the raw linen, when precipitated by acids, throws down a nearly black resinous mass, and the total loss of weight is very great.

c. The weaver's dressing is composed chiefly of farinaceous, glutinous, or gelatinous substances, starch, flour, or size. They are usually allowed to become sour before using. They are all dissolved by water or alkaline solutions, including lime. When the dressing gets dry, the hand-weaver occasionally renders his warp-threads more pliant by rubbing some cheap kind of grease upon them. Hence it happens that the cloth which has not been completely freed from this fatty matter will not readily imbibe water in the different bleaching operations; and hence, in the subsequent processes, these greasy spots, under peculiar circumstances—somewhat like lithographic stones—strongly attract the aluminous and iron mordants, as well as the dyestuffs, and occasion stains which it is almost impossible to discharge. The acids act differently upon the fatty matters, and thence remarkable anomalies in bleaching take place. When oil is treated with the acetic or muriatic acid, or with aqueous chlorine, it evolves no gas, as it does with the sulphuric and nitric acids; but it puts these substances into a condition in which they cannot be dissolved by a strong boiling lye of caustic soda. Carbonic acid is said to have a similar action with oil.

d. Both cotton and linen contain a little fatty matter, which is removed in the same manner as the resinous. Some of it comes from the mode of treating the warp, which is occasionally greased for weaving. This prevents, like resinous matter, the thorough saturation by solutions which are not alkaline, and soap, soda, or potash must be used to remove it by solution. Lime makes an insoluble soap, and is therefore not suited to the operation. If, however, lime has been used, the insoluble soap may be removed by treating with carbonate of soda, which forms a carbonate of lime, and leaves the fat in combination with the alkali. The carbonate of lime is then removed by an acid. This is, however, an indirect method; and the mode universally used is to decompose the lime soap by an acid, and remove the lime, leaving the fat in the cloth; then to wash out the fat by an alkali, or by soap and alkali mixed, as is the custom almost everywhere. The soap used is in great measure a resinous one, for cheapness, and it is mixed with carbonate of soda.

e. When the hand-weavers' grease continues in contact for a night with the copper dents of his reed, a kind of cupreous soap is formed, which is sometimes very difficult to remove from the web. Lime-water does not dissolve it; but dilute sulphuric acid carries off the metallic oxide, and liberates the margaric acid, in a state ready to be acted on by alkalis.

f. When cloth is boiled with milk of lime, the grease which is uncombined unites with that alkaline earth, and forms a calcareous soap, pretty soluble in a great excess of lime-water, and still more so in caustic soda. But all fats and oils, as well as the soaps of copper and lime, cease to be soluble in alkaline lyes when they have remained a considerable time upon the goods, and have been in contact with acetic, carbonic, muriatic acids, or chlorine. These results have been verified by experiment.

g. Cotton goods are sometimes much soiled, from being sewed or tamboured with dirty hands; but they may easily be cleansed from this filth by hot water.

h. Any ferruginous or earthy matters which get attached to the goods in the course of bleaching are readily removable, if not allowed thoroughly to penetrate the cloth; but the fine ferruginous clay found in suspersion in water is very difficult to wash off,

Digitized by Google

and it probably cannot, by any means, be removed from printed goods without spoiling the colours.

i. In all these operations it is needful to consider the most important substance of all—the fibre. Each of the operations may weaken or destroy it, if managed unwisely. Caustic lime may be allowed to act for a long time on cloth without any injury, but if allowed to act on it with free access of air, it destroys it in a few hours. Neither can cloth stand the action of alkalis of any kind very long: if very strong, they rapidly destroy it. The same thing may, in a still stronger sense, be said of acids; and chloride of lime or bleaching powder acts in the same direction. Linen, although mechanically much stronger than cotton, has not an equal chemical resistance to decomposition. It has not, therefore, been possible to use chloride of lime so as entirely to complete the process of bleaching linen, but only to hasten it, the completion being still nearly in all cases made by crofting. The bleacher has found out these things by expensive experience, and every day shows the importance of guarding against the excessive action of any one of the bleaching agents. Goods are continually suffering from the desire of speed on the part of the trade, and especially of the buyer; nor is it easy to find them absolutely uninjured by the process of bleaching, although it seems possible to conduct the process so that no weakening will ensue. The precautions taken are such as cause the processes to appear very long and tedious. The boiling with lime is continued as long as it is safe; the cloth is then at once washed and scoured, so as to remove all the caustic earth from the fibre. The acid is not allowed to remain long, but is, within from two to four hours, washed out by machines which cause the cloth to be frequently and rapidly saturated with water; and when one of these processes is not enough, it is found better to return to it again than completely to finish it at once, to the danger of the fibre; in the same way as workmen, if they find it needful to put their hands into hot water, do it rapidly and for a short time, but bring them out to cool before they return to the charge. To dry the goods with even a very small amount of acid would infalliby render them rotten. When the chlorine has oxidised or otherwise acted on the colouring matter, so as to render it soluble, it is washed out with alkalis; but the whole may not be acted on by the first process, and a second may be needful. Again, as to crofting: one exposure may not be found enough; another washing and another crofting are then needed, and a third, and so on, according to the method employed and the nature of the material used.

The souring by vegetable substances or by fermentation may also injure the cloth, not by the amount of acid existing in the solution, but the decomposition which becomes communicated from the vegetable matter to the cloth, and so renders it weak and rotten. The same is peculiarly the case when putrefactive action is allowed to commence. This was often the case when the gluten of the paste was removed by fermentation. It has been said that the action of carbonic and acetic acid on the fats is a great objection to the fermentation process, as they are thought to render the fat insoluble, and produce an indelible mark.

Experiments undertaken for the purpose have shown that the strength of the fibre is not impaired by being boiled in milk of lime for two hours, at the ordinary pressure, provided it is not exposed at the same time to air; but bleachers consider that, practically, the goods are not injured by boiling with lime for sixteen hours at the strength of 40 lbs. to 100 gallons. It has also been proved that caustic soda of the specific gravity of 1030° does not hurt them, even boiled under the pressure of 140 lbs. to the square inch, or immersion for eight hours in chloride of lime solution containing 3 lbs. to 100 gallons, and afterwards in sulphuric acid of the specific gravity of 1067°, or eighteen hours at the specific gravity of 1035°.

j. The carbon left by the singeing is entirely removed, but it is not clear what becomes of it. It disappears in the alkaline solution, as no traces seem to exist after this action. Probably the blackness or darkness is not caused by any pure carbon, but by compounds soluble in alkalis. If any elementary carbon exist, it is carried away almost entirely, no doubt, by mechanical means.

k. The same method gets rid of the particles of pod which remain in the cotton, and after the first washing seem to stand out very prominently, swelling up into large dark spots. The alkali probably renders them soft, and allows them to mix readily with liquids, if not altogether actually dissolved.

General Process of Bleaching.—The process of bleaching, from what we have seen, resolves itself into treatment with alkalis and the action of chlorine or of light. In describing the operations, they seem to be very numerous; but, as explained, some require to be repeated gently, instead of being finished by one decisive operation, so so as not to injure the fibre; and some are intermediate operations, such as the frequent washings needed in passing from one process to the other. The alkaline solution in which the goods are boiled does not contain above 250 lbs. of carbonate of soda to 600 gallons, but nearly always less. Lime is, however, used much more frequently

Digitized by Google

than soda, which it will be seen is only employed in the second process, and the third, if there be one. It is less hurtful to the cloth, and is much cheaper than the alkalis.

The chloride of lime is used at ¼ Twaddle, or 1002·5. It is not considered so important now as formerly, and where 300 lbs. were formerly employed, 30 to 40 are now used. The goods are made nearly white by the alkalis. The chlorine gives only the last finish, and is sometimes used to whiten the ground on coloured goods. The whole process may be expressed thus:—Wash out the soluble matter; boil with lime to dissolve still more, and to make a fatty compound with the oily matter; wash out the lime by acids; wash out the fat with a soda soap; clear the white by chloride of lime.

The impurities in the cloth have a certain power of retaining colour upon them. Mud and dirt, as well as grease, gluten, and albuminous matters, have this property, and fatty soaps, such as lime compounds of fatty acids. The pure fibre, however, has no power of taking up solutions of such colouring matter as madder. When, therefore, it is desired to try the extent to which cloth has been bleached, it is dyed or boiled up with madder exactly as in the process of dyeing. It is then treated with soap, as the madder-dyed goods are treated, and if it comes out without a stain, or nearly pure white, the goods are ready. Dyers or calico-printers who dye printed goods are exceedingly particular as to the bleaching, the dyeing and printing having now approached to such exactness, that shades invisible to any eye not very much experienced are sufficient to diminish in a material degree the value of the cloth. Any inequality from irregularity of bleaching, which causes a similar irregularity of dyeing, is destructive to the character of the goods. Many patterns, too, have white grounds; these grounds it is the pride of a printer to have as white as snow. If delicate colours are to be printed, they will be deteriorated if the ground on which they are to be printed is not perfectly white.

The stains which come out upon maddered goods in consequence of defective bleaching are sometimes called *spangs*. Their origin is such as I have described above, as the following statements of facts will show. The weaver of calicoes receives frequently a fine warp so tender, from bad spinning, or bad staple in the cotton, that it will not bear the ordinary strain of the heddles, or friction of the shuttle and reed, and he is obliged to throw in as much weft as will compensate for the weakness or thinness of the warp, and make a good marketable cloth. He of course tries to gain his end at the least expense of time and labour. Hence, when his paste dressing becomes dry and stiff, he has recourse to such greasy lubricants as he can most cheaply procure, which are commonly either tallow, or butter in a rancid state, but the former, being the lowest priced, is preferred. Accordingly, the weaver, having heated a lump of iron, applies it to a piece of tallow held over the warp in the loom, and causes the melted fat to drop in patches upon the yarns, which he afterwards spreads more evenly by his brush. It is obvious, however, that the grease must be very irregularly applied in this way, and be particularly thick on certain spots. This irregularity seldom fails to appear when the goods are bleached or dyed by the common routine of work. Printed calicoes, examined by a skilful eye, will be often seen to be stained with large blotches, evidently occasioned by this vile practice of the weaver. The ordinary workmen call these *copper* stains, believing them to be communicated in the dyeing copper. Such stains on the cloth are extremely injurious in dyeing with the indigo vat.

Old Methods still in use.—As a specimen of the older processes, we shall give the following, adding afterwards a minute account of some of the plans adopted by the most successful bleachers. When grease stains do not exist, as happens with the better kind of muslins, or when goods were not required to be finely finished, the following has been adopted:—After singeing, 1. Boiling in water. 2. Scouring by the stocks or dash-wheel. 3. Bucking with lime. 4. The bleaching properly so called, viz., passing through chlorine or crofting. 5. Bucking or bowking with milk of lime. These two latter processes employed alternately several times, till the whole of the colouring matter is removed. 6. Souring. 7. Washing.

Another routine has been, 1. Cleansing out the weavers' dressing, by steeping the cloth for twelve hours in cold water, and then washing it at the stocks or dash-wheel. 2. Boiling in milk of lime, of a strength suited to the quality of the goods, but for a shorter time than with the soda lye; two short operations with the lime, with intermediate washing, being preferable to one of greater duration. 3 and 4. Two consecutive lyes of ten or twelve hours' boiling, with about 2 lbs. of soda crystals for 1 cwt. of cloth. 5. Exposure to the air for six or eight days, or the application of chloride of lime and then sulphuric acid. 6. A lye of caustic soda. 7. Exposure to the air for six or eight days, or chlorine and acid as above. 8. Caustic-soda lye as before. 9. Chlorine and the sour. 10. Rinsing in hot water, or scouring by the dash-wheel.

Digitized by Google

The Processes used in Bleaching. Singeing.—The singeing is performed by passing the cloth over a red-hot plate of iron o rcopper. The figure 163 shows this apparatus

163

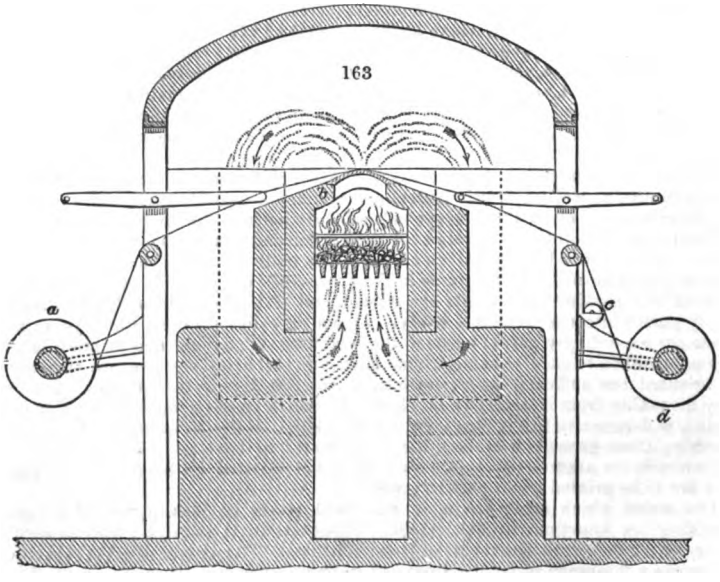

as improved by Mr. Thom. At *a* there is a cylinder, with the cloth wound round it to be singed; it passes over the red-hot plate at *b*, becomes singed, passes over a small roller at *c*, which is partly immersed in water, and by this means has all the sparks extinguished; then is wound on to the roller *d*, when the process is finished. As the products of combustion from the singeing are sometimes very unpleasant, they are carried by this apparatus into the fire-place, where they are consumed. The arrows show the passage of these vapours from the surface of the cloth downwards into the hearth, and thence into the fire.

For goods to be finely printed both sides are singed; for market bleaching, one side. Sometimes, however, singeing is not at all desired.

The use of a line of gas jets instead of a red-hot plate, was introduced by Mr. Samuel Hall. It has not, however, found its way generally into bleach works: the plate is preferred. Gas jets are used necessarily in singeing threads. See SINGEING.

Shearing.—For fine printing, it is by some considered needful to shear the nap of the cloth instead of singeing it. The method is more expensive than singeing. Messrs. Mather and Platt have made a machine which will shear 60 to 80 yards per minute.

Bucking or *Bowking.*—This is the process of boiling goods. It is performed in alkaline liquids, generally lime, or soda, or both. The kier for bowking is a cylindrical iron vessel, the chief peculiarity of which is a method of preventing the cloth from being burnt on the bottom of the vessel, or allowed to dry on the vessel, or so to be pressed on the bottom as to prevent the boiling of the liquid in a uniform manner. This is done by simply having a false bottom to the kier, or a wooden perforated bottom, about eight or ten inches above the actual bottom.

164

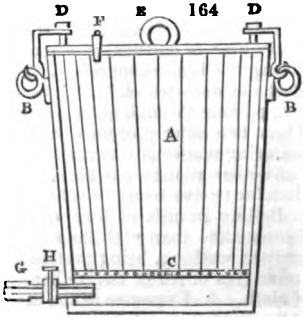

The boiler, such as A, *fig.* 164, has a stopcock, H G, at bottom, for running off the waste lye. Kiers are commonly made of cast iron, and are capable of containing from 300 to 600 gallons of water, according to the extent of the business done. In order that the capacity of the boilers may be enlarged, they are formed so as to admit of a crib of wood, strongly hooped, or, what is preferable, of cast iron, to

Digitized by Google

be fixed to the upper rim or edge of it. To keep the goods from the bottom, where the heat acts most forcibly, a strong iron ring, covered with netting made of stout rope, c, is allowed to rest six or eight inches above the bottom of the boiler. Four double ropes are attached to the ring, E, for withdrawing the goods when sufficiently boiled, which have each an eye for admitting hooks from the running tackle of a crane. Where more boilers than one are employed, the crane is so placed that, in the range of its sweep, it may withdraw the goods from any of them. For this purpose, the crane turns on pivots at top and bottom; and the goods are raised or lowered at pleasure, with double pulleys and sheaves, by means of a cylinder moved by cast-iron wheels. The lid is secured by the screw bolts D D, and rings B B. F is a safety-valve.

To avoid the excessive heating needful to drive the liquid through the goods, Mr. John Laurie invented the keir at *fig.* 165.

In this *fig.* 165, A B C D is the wooden kieve, or kier, containing the cloth; C E F D represent the cast-iron boiler; G G, the pump; *g* K, the pipe of communication between the kier and the boiler. This pipe has a valve on each of its extremities: that on the upper extremity, when shut, prevents the lye from running into the boiler, and is regulated by the attendant by means of the rod and handle *g* B. The valve at K admits the lye; but, opening inwards, it prevents the steam from escaping through the pipe *g* K. The boiler has a steam-tight iron cover, *g* L; and at C D in the kier is a wooden grating, a small distance above the cover of the boiler.

165

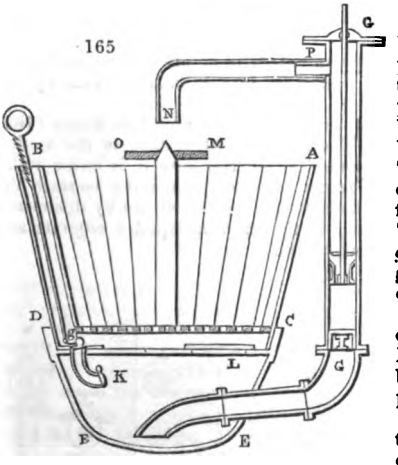

At M O is a broad plate of metal, in order to spread the lye over the cloth. It is hardly necessary to say that the boiler has a furnace, as usual, for similar purposes.

While the lye is at a low temperature, the pump is worked by the mill or steam-engine. When it is sufficiently heated, the elasticity of the steam forces it up through the valves of the pump, in which case it is disjoined from the moving power.

N P is a copper spout, which is removed at the time of taking the cloth out of the kier.

In order still further to avoid labour, the pumping has been entirely done away with.

A simple modification of the bowking apparatus is shown in *figs.* 166, 167, 168; the first being a vertical section, the second a horizontal

167

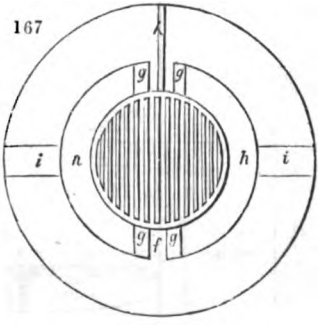

166

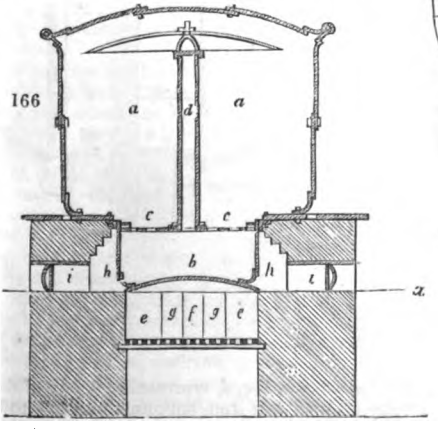

168

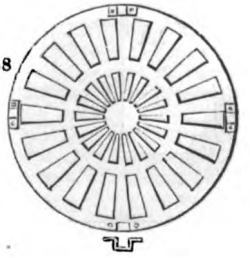

Digitized by Google

section in the line *x* of the first. It consists of two parts: the upper wide part, *a a*, serves for the reception of the goods, and the lower or pot, *b*, for holding the lye; *c c* is an iron grating, shown apart in *fig.* 168. The grating has numerous square apertures in the middle of the disc, to which the rising pipe *d* is screwed fast. The upper cylinder is formed of cast iron, or of sheet iron well riveted at the edges; or sometimes of wood, this being secured at its under edge into a groove in the top edge of the lye-pot. The mouth of the cylinder is constructed usually of sheet iron. *e e* is the fire-grate, whose upper surface is shown in *fig.* 166: it is made of cast iron in three pieces. The flame is parted at *f*, and passes through the two apertures *g g*, into the flues *h h*, so as to play round the pot, as is visible in *fig.* 167, and escapes by two outlets into the chimney. The apertures *i i* serve for occasionally cleaning out the flues *h h*, and are, at other times, shut with an iron plate. In the partition *f*, which separates the two openings *g g*, and the flues *h h*, running round the pot, there is a circular space at the point marked with *k*, *fig.* 167, in which the large pipe for discharging the waste lye is lodged. The upper large cylinder should be encased in wood, with an intermediate space filled with sawdust, to confine the heat. The action of this apparatus is exactly the same as that already explained.

Besides the boiling, bucking, and other apparatus above described, the machinery and utensils used in bleaching are various, according to the business done by the bleacher.

The kier of Messrs. Mather and Platt is very complete. The first figure (169) is the kier when shut or screwed down. The second (170, p. 328) is the section of the kier, which is very like that before given; but in this case it is steam tight, and heated by steam which issues from a steam pipe communicating beneath the false bottom. The dangers attending the kier before mentioned are by this means entirely averted, and all the inventions which give the washing liquid a separate and distinct place for heating are at once done away with.

169

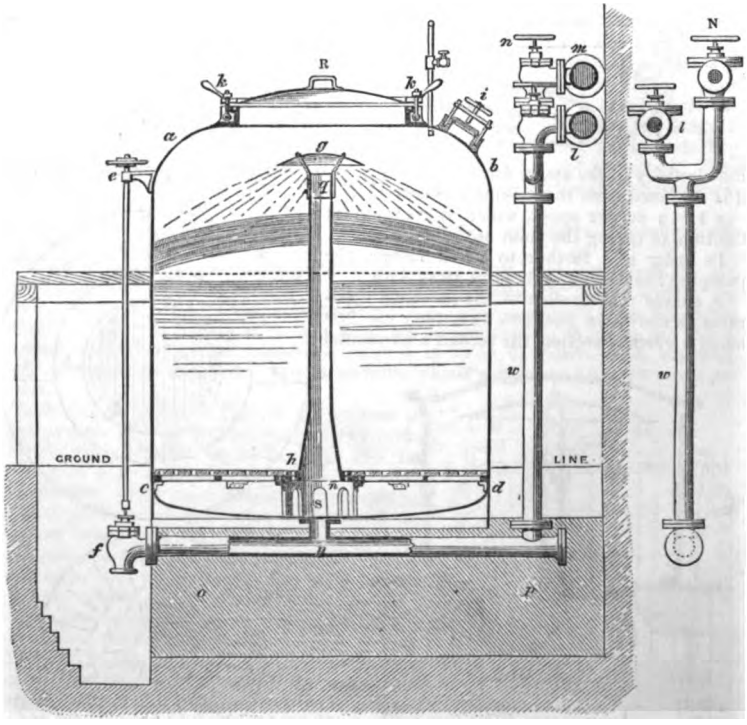

An exact description of these kiers is required. *a*, *b*, *c*, *d*, represent the body of the kier, which is a cylindrical vessel, generally made of cast iron, but sometimes of wood,

Digitized by Google

or wrought iron. *h* represents false bottom; a cast-iron grating, sometimes covered with boulder stones, and sometimes with wood; *g*, cylindrical disc, of wrought iron,

170

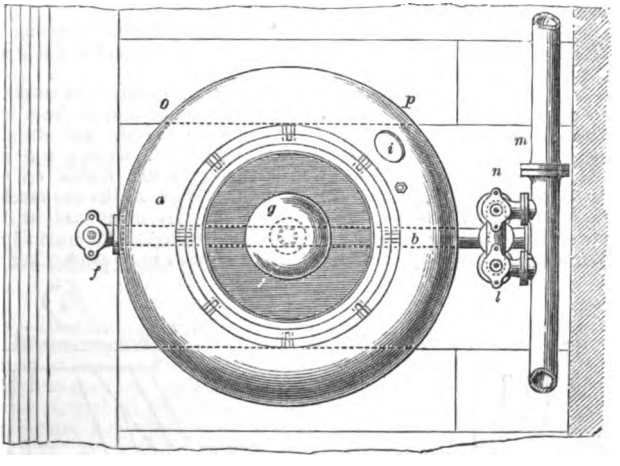

placed on the top of "puffer-pipe" *q*, to spread the liquor over the cloth. *q*, "puffer-pipe," standing on false bottom, *h*. *s*, cylindrical casting for supporting false bottom and "puffer-pipe," whose periphery is "slotted," to admit of the liquor passing through. *r*, cover for kier; the flanch on which this cover rests is grooved a little, to admit of "gasking" being inserted, so as to form a "joint." *k*, *k*, swivel bolts, holding down the cover. *i*, a small aperture, covered with a lid capable of being removed easily, to enable the attendant to see that the cloth does not rise too high in the kier to endanger its working; if such happens, he checks the steam until the cloth settles, after which it does not again attempt to rise. *n*, steam valve; *l*, water valve; both communicate with pipe *w*, leading to kier. *p*, pipe communicating with kier for supplying steam and water — also serves as escape-pipe; *f*, escape-valve for letting off kier; *e*, wheel for opening ditto; *m*, steam pipe from boiler. *o*, *p*, foundation for kier.

The process of cleansing is very various. Some use lime for the first process; some use soda alone; some use them mixed. Of course when carbonate of soda and lime are used, caustic soda is at once formed, and the carbonate of lime is left idle. The practices and fancies of bleachers are numerous; and we have only to say that the principle consists in the use of alkaline lyes. Some use lime to the amount of 3 per cent.; others go as high as 10. The lime is slaked first and a portion thrown in; a portion of cloth is laid upon it, and a portion of lime again covers that; but on no account must the goods be allowed to lie in contact with the atmosphere and the lime.

When removed from the kiers the goods must be washed. Now if they are to be washed in dash-wheels, it is needful that they be in separate pieces, and in this state they are sometimes boiled in the kiers; but if they are to be washed in the washing machines, they are lifted out of the kier in the same manner as a piece of string is drawn out of the canister in which the coil is kept.

M. Metz, of Heidelberg, has attempted to perform the work of boiling by merely extracting the air from the cloth. For this purpose the cloth is simply put into a strong upright cylinder, the top screwed down, and the air taken out by an air-pump. We have no knowledge as to the advantages gained by this process, or whether it has been found actually capable of putting cloth in a condition to be bleached for a very fastidious market.

Steeping.—Instead of boiling in the kier at first, the goods are sometimes, though now rarely, steeped from one to two days in water, from 100° to 150° F., for the purpose of loosening the gummy, glutinous, and pasty materials attached to the cloth. Fermentation ensues, and this process is dangerous, as the action of the ferment sometimes extends to the goods, especially if they are piled up in a great heap without being previously washed. The spots of grease on the insoluble soaps become thereby capable of resisting the caustic alkalis, and are rendered in some measure indelible;

Digitized by Google

an effect due, it is believed, to the acetic and carbonic acids generated during fermentation. Some persons throw spent lyes into the fermenting vats to counteract the acids. The spots of grease are chiefly to be found in hand-loom goods, and the difficulty concerning the fats is not therefore commonly felt where power-loom goods are chiefly used, as in Lancashire.

Washing. — If the cloth is to be washed without having the pieces strung together, the following methods may be adopted. The stocks are still used, but not in any large establishments in Lancashire.

Figs. 171, 172, represent a pair of wash-stocks. A A are called the stocks, or feet. They are suspended on iron pivots at B, and receive their motion from wipers on the revolving-shaft C. The cloth is laid in at D, and, by the alternate strokes of the feet, and the curved form of the turnhead E, the cloth is washed and gradually turned. At the same time, an abundant stream of water rushes on the cloth throughout holes in the upper part of the turnhead. Wash-stocks are much used in Scotland and in Ireland. In the latter country, they are often made with double feet, suspended above and below two turnheads, and wrought with cranks instead of wipers. Wash-stocks, properly constructed, make from 24 to 30 strokes per minute.

171

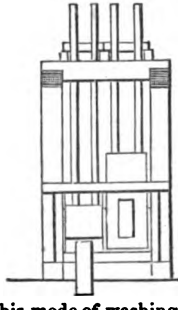

172

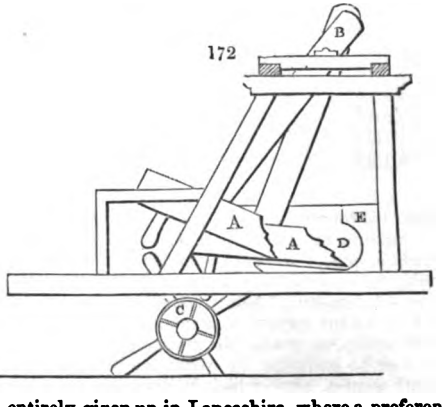

This mode of washing is now entirely given up in Lancashire, where a preference is given to dash-wheels and washing machines with squeezers. The dash are small water-wheels, the inside of which is divided into four compartments, and closed up, leaving only a hole in each compartment for putting in the cloth. There are, besides, small openings for the free admission and egress of the water employed in cleansing. The cloth, by the motion of the wheel, is raised up in one part of the revolution of the wheel; while, by its own weight, it falls in another. This kind of motion is very effectual in washing the cloth, while, at the same time, it does not injure its strength. The plan, however, where economy of water is of any importance, is very objectionable; because the wheel must move at by far too great a velocity to act to advantage as a water-wheel.

The wash or dash-wheel, now driven by steam power in all good bleach and print-works, is represented in *fig* 173, upon the left side in a back view, and upon the right side in a front view (the sketch being halved). *Fig.* 174 is a ground plan.

a a is the washing-wheel; *b b* its shaft-ends; *c c* their brass bearings or plummer-blocks, supported upon the iron pillars *d d*. The frame is made of strong beams of wood, *e e*, bound together by crossbars with mortises. *f f*, two of the circular apertures, each leading to a quadrantal compartment within the dash-wheel. In

173

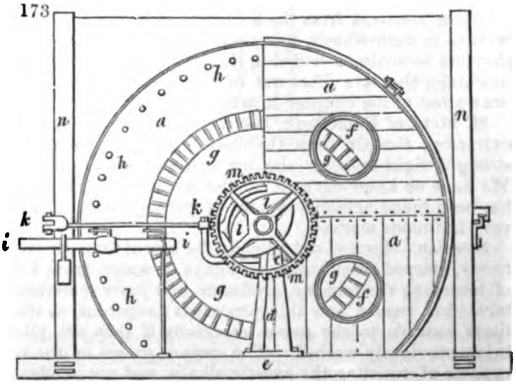

Digitized by Google

the back view (the left-hand half of the figure) the brass grating, *g g*, of a curvilinear form, is seen, through which the jets of water are admitted into the cavity of the wheel; *h h* are the round orifices, through which the foul water runs off, as each quadrant passes the lower part of its revolution; *i*, a water-pipe, with a stop-cock for regulating the washing-jets; *k k*, the lever for throwing the driving-crab *l*, or coupling-box, into or out of gear with the shaft of the wheel. This machine is so constructed, that the water-cock is opened or shut by the same leverage which throws the wheel into or out of gear. *m*, a wheel, fixed upon the round extremity of the shaft of the dash-wheel which works into the toothed pinion connected with the prime mover. When the end of the lever *k*, whose fork embraces the coupling-box upon the square part of the shaft, is pushed forwards or backwards, it shifts the clutch into or out of gear with the toothed wheel *m*. In the latter case, this wheel turns with its pinion without affecting the dash-wheel. *n n*, holdfasts fixed upon the wooden frame, to which the boards *o o* are attached, for preventing the water from being thrown about by the centrifugal force.

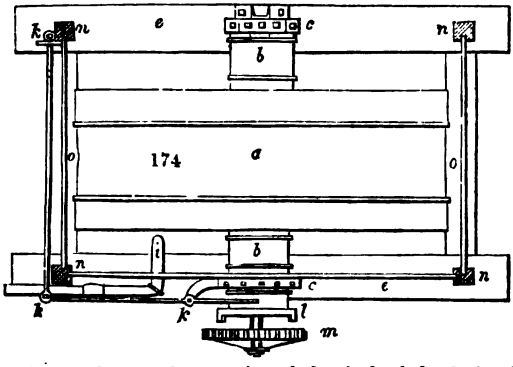

The dash-wheel is generally from 6 to 7 feet in diameter, about 30 inches wide, and requires the power of about two horses to drive it.

A dash-wheel has one piece of cloth in each of the four compartments; these are washed in eight minutes, being 30 pieces an hour, or 300 pieces a day; sometimes two pieces are put in, when double the time is given. It generally requires 60 gallons of water per minute to feed it, 36,000 gallons a day, or 120 to a piece. Always after washing, the squeezers are applied, as they remove at once the superfluous water.

The machine made by Mr. Mather (*figs.* 175 and 176) washes 800 pieces per hour, or 8000 pieces per day of ten hours, using 400 gallons per minute, or 120,000 gallons per day, or 20 gallons to a piece. This class of machine is now in its turn superseding the dash-wheel.

This washing machine will be understood by the general plan (*fig.* 176, and corresponding section, *fig.* 175). *a* and *b* represent the squeezing-bowls. *a*, is 18 inches diameter and 8 feet three inches long; it is made of deal timber. (The lapping of strong canvas at *a''* is for the purpose of giving the "out-coming" pieces an extra squeeze, in order to prepare them for the kiers.) *b* is 24 inches diameter and of the same length as *a*, making 100 revolutions per minute; it is generally made of deal, sycamore, however, being better. *c*, *d*, a strong wooden rail, in which pegs are placed in order to guide the cloth in its spiral form from the edge to the centre of the machine. *h*, *h*, the water-trough, through which the piece passes round the roller *n*. *p*, (*fig.* 175), water-pipe. *t*, water-tap. *m*, *m*, pot-eyes, which may be adjusted to any angle, to guide and regulate the tension of the piece on entering the machine. *l*, side frame, for carrying bowls, &c. *g*, engine (with cylinder, 8 inches diameter) and gearing for driving machine. *w*, weight and lever for regulating pressure on the bowl.

This machine washes 800 pieces per hour, and requires 400 gallons of water per minute. It will serve also to represent the *chemick* and *souring* machine, the only difference being that the bowls are 3 feet 6 inches, instead of 8 feet 3 inches, in length.

The *chemick* and *sour* are brought by turns into the trough, or into similar separate troughs, by a leaden pipe from the mixing cisterns, and are run in to 6 or 8 inches deep.

The washing machine of Mr. Bridson (*fig.* 177, p. 332) is worth attention. In its action the course of the cloth in the water is easily seen; it is chiefly horizontal. This motion had been given by Hellewell and Fearn in 1856; but they had a very complicated machine, and they did not attain the flapping motion which is given to the cloth when it becomes suddenly loose, and is driven violently against the board *a a* as often as *b c* and *e d* are in one line. It is not shown by the drawing that the cloth passes eight times round these wheels. There is a constant stream of water from the pipe *f*, which is flattened at the mouth about one and a half inch in one diameter, and about ten inches in the other. This machine can wash 900 pieces in an hour. It requires

Digitized by Google

175

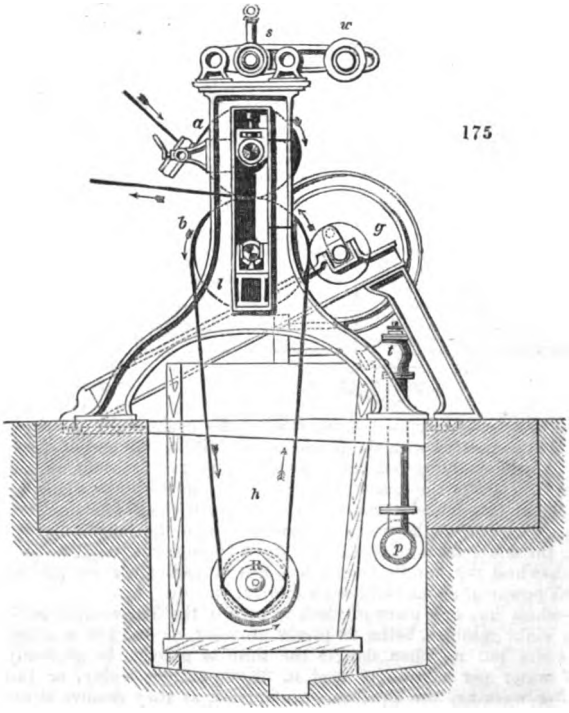

176

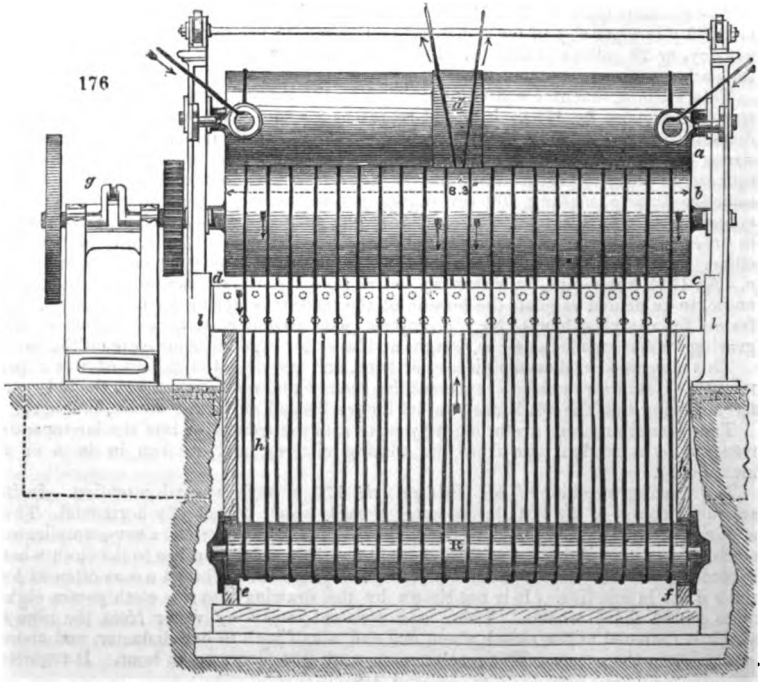

Digitized by Google

177

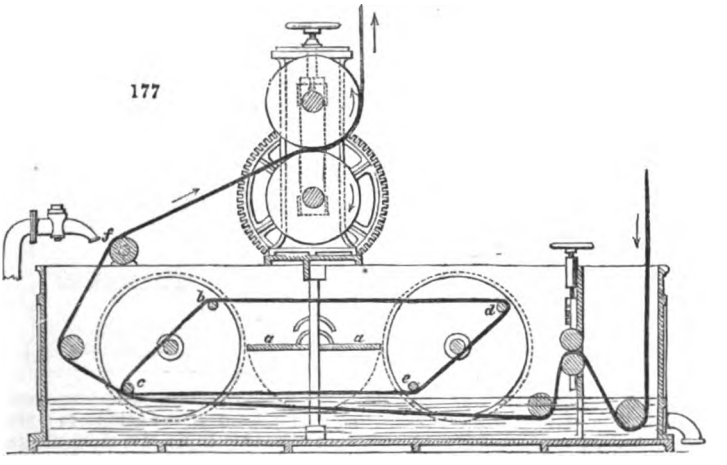

about twice as much water as a dash-wheel, but washes seven and a half times more pieces. Its length is nine feet.

Souring. — After boiling in the first kier and washing, the goods are soured in muriatic acid of 1010° specific gravity, or 6½ gallons of the usual acid, which contains 33 per cent. of real acid, mixed with 100 gallons of water. This is equal to 2° Tw. Muriatic acid may be replaced by sulphuric acid of 1024° specific gravity, *i. e.* 3½ gallons liquid acid to 100 of water; — or the amount of the acid may be doubled in either case, and a shorter time allowed for the souring. The souring is performed in wooden or stone cisterns, where the cloth is laid regularly as it falls over one of the rollers of the calender; — or it is passed through the acid solution by the movement of the calender in the same manner as described in the process of washing. If this method is used, it is allowed to lie on the stillages from two to three hours to allow the acid to act. The acid decomposes any lime soap formed, and washes out the lime. Hydrochloric or muriatic acid has been preferred in the process described, as the chloride of calcium is so much more soluble than the sulphate. After souring, of course the goods must be thoroughly washed as before.

The sixth operation with soda removes the remaining fatty materials. If lime be used, it may be allowed to settle; and it is better to allow it to do so, and thus to use pure caustic soda, which will with the resin remove the impurities in a more soluble form. If, instead of adding 170 lbs. of soda crystals to 600 gallons of water, 4·6 lbs. of liquid caustic soda of specific gravity 1320° were added, the effect would be the same.

The solution of resin and carbonate of soda is a half formed soap, which is considered to act beneficially in removing the soluble matter. It would not appear, from theory, to be capable of doing so well as the soda which has its carbonic acid removed; but tender goods will not allow the action of caustic soda, and the carbonate is therefore safer.

Powder-bleaching.—Chloride of lime is added in stone vessels where the goods are allowed to lie. It is universally called *chemick* in the manufactories. The strength used at Brickacre is half a degree Twaddle, or 1002·5. This is sometimes very much increased, so as to be even 5° in some establishments, according to the goods bleached; but it is not safe to allow the cloth to lie long in such strong solutions. In such cases it is needful to pass them rapidly through with the calender, so as to soak them thoroughly, and then to pass them on to the acid, and forward to be washed. It may be remarked that the use of the calender for these operations renders it possible to use strong solutions, even for tender goods, as there is no time given for injurious action on the fibre.

Great care is to be taken to make the solution of the chloride of lime perfectly clear. The powder does not readily wet with water, and it must therefore be pressed or agitated. This may be done by putting it in a revolving barrel with water, until complete saturation of the powder with moisture; the amount required is then thrown into the cistern, and the insoluble matter allowed to sink. This insoluble matter must not be allowed to come into contact with the cloth, as it will be equal of course to a concentrated solution of the liquor, and will produce rottenness, or *burn the cloth* so as to leave holes. When removing from the trough, the cloth is drawn through squeezing rollers, which press out any excess of chloride of lime.

Digitized by Google

Squeezing.—The squeezing rollers or squeezers, for discharging the greater part of the water or any liquid from the yarns and goods in the process of bleaching, are represented in *figs.* 178, 179, the former being a side view, to show how the roller gudgeons lie

178

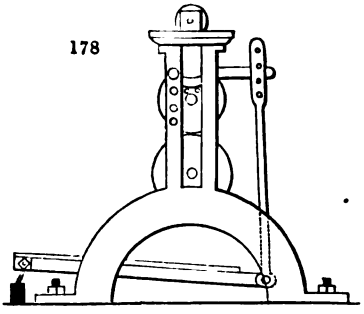

179

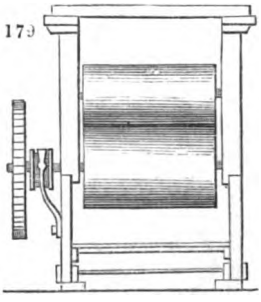

in the slots of the frame, and how the shaft of the upper roller is pressed downward by a weighted lever, through a vertical junction road, jointed at the bottom to a nearly horizontal bar, on whose end the proper weight is hung. In *fig.* 179, these rollers, of birch-wood, are shown in face; the under one receiving motion through the toothed wheel on its shaft from any suitable power of water or steam. Upon the shaft of the latter, between the toothed wheel and the roller, the lever and pulley for putting the machine into and out of gear is visible. The under roller makes about 25 revolutions in the minute, by which time three pieces of goods, stitched endwise, measuring 28 yards each, may be run through the machine, from a water trough on one side to a wooden grating upon the other.

A squeezing machine, with a small engine attached, is shown in *fig.* 180, for the drawing of which we are again indebted to the makers, Messrs. Mather and Platt.

180

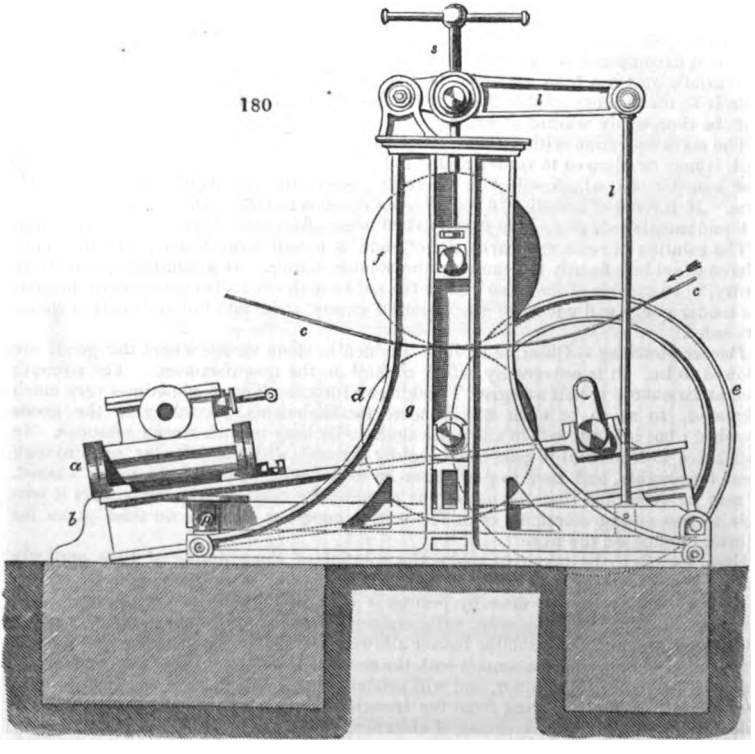

Digitized by Google

d, *f*, represent the squeezing-bowls. They are as large in diameter as possible, and are generally made of sycamore; but the bottom one is better made of highly compressed cotton. *a*, *b* are the engine and frame for driving; *g*, frame for carrying bowls; *l*, *l*, compound levers for regulating the press use; *s* is a screw for the same purpose, and *c* is the cloth passing through the bowls.

The white-squeezers, or those used before drying, should have a box, supplied with hot water, fixed so that the piece may pass through it before going to the nip of the bowl.

When the goods are run through, they are carried off upon a grated wheelbarrow in a nearly dry state, and transferred to the spreading machine, called at Manchester a *candroy*. In many bleach works, however, the creased pieces are pulled straight by the hands of women, and are then strongly beat against a wooden stock to smooth out the edges. This being done, a number of pieces are stitched endwise together, preparatory to being mangled.

This squeezing machine is small, but, as will be seen, the rollers are introduced so as to act as long and as rapidly as cloth of whatever length is drawn through them.

The following figure (181) represents a pair of squeezers, for squeezing the cloth after several of the processes named, and are shown as being driven by a small high pressure engine. *a* is the fly wheel of engine; *b*, crank of ditto; *c*, frame of engine; *d*, spur wheels connecting the engine and squeezers; *e* and *f*, sycamore squeezing bowls.

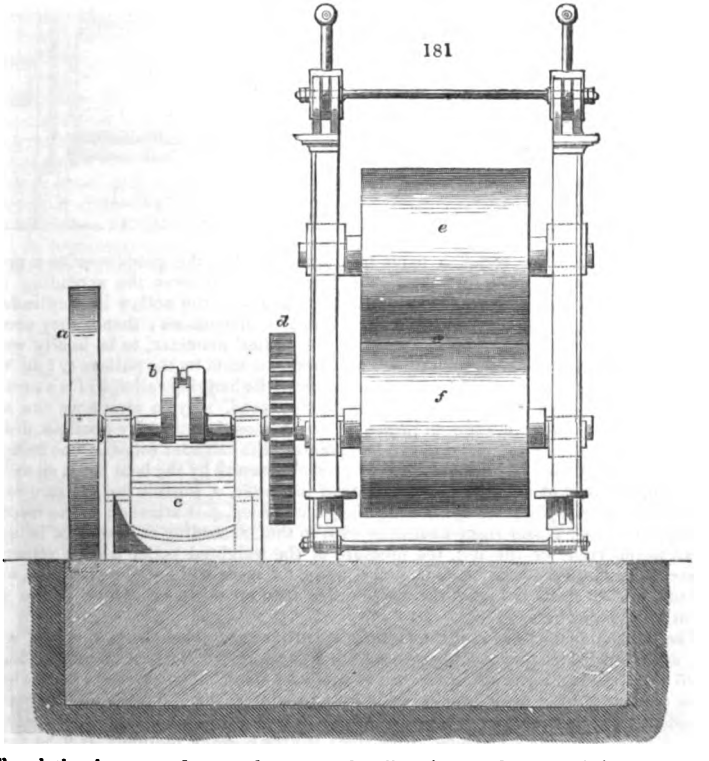

The cloth when passed over the steamed rollers is now dry; but it is not smooth and ready for the market. If the cloth is wanted for printing, no further operation is needed; but if to be sold as white calico, it is finished by being starched and calendered.

The starch at large works is prepared by the bleachers themselves. At Messrs. Bridson's it is made with the very greatest care from flour. Of course it would be more expensive for them to buy it, as the manufacturer would dry it, and they would require to dissolve it. They are able also, in this manner, to obtain the purest starch. This is mixed with blue, according to the finish of the goods. A roller, which dips into the starch, lays it regularly and evenly on the cloth in the same manner as

Digitized by Google

mordants are communicated in calico printing, whilst other rollers expel the excess of the starch. The cloth is then dried over warm cylinders, or by passing into a heated apartment. It receives the final finish generally by the calender; but muslins receive a peculiar treatment.

Calender.—Fig. 182 is a cross section of this machine, and *figs.* 183, 184 are front views broken off. The goods are first rolled upon the wooden cylinder; *a*, near the

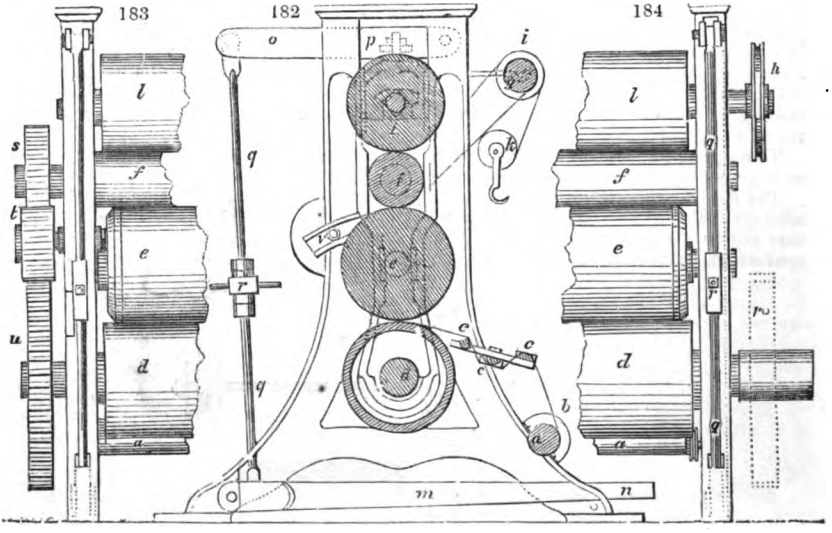

ground; by the tension roller, *b*, upon the same cylinder, the goods receive a proper degree of stretching in the winding off. They then pass over the spreading bars, *c c c*, by which they are still more distended; next round the hollow iron cylinder, *d*, 16 inches diameter, and the paper cylinder, *e*, of like dimensions; thence they proceed under the second massive iron cylinder, *f*, of 8 inches' diameter, to be finally wound about the projecting wooden roller, *g*. This is set in motion by the pulleys *h*, (*fig.* 184), and *i* (*fig.* 182), and receives its proper tension from the hanging roller, *k*; *l* is a pressing cylinder of 14 inches' diameter, made of plane-tree wood. By its means we can at all times secure an equal degree of pressure, which would be hardly possible did the weighted lever press immediately upon two points of the calender rollers. The compression exercised by the cylinders may be increased at pleasure by the bent lever, *m*, weights being applied to it at *n*. The upper branch of the lever, *o*, is made fast, by screws and bolts at *p*, to the upper press cylinder. The junction leg, *q*, is attached to the intermediate piece, *r*, by left and right-handed screws, so that, according as that piece is turned round to the right or the left, the pressure of the weighted roller will be either increased or diminished. By turning it still more, the piece will get detached, the whole pressure will be removed, and the press roller may be taken off, which is the main object of this mechanism.

The unequable movement of the cylinders is produced by the wheels *s*, *t*, *u*, of which the undermost has 69, the uppermost 20, and the carrier-wheel, *t*, either 33, 32, or 20 teeth, according to the difference of speed required. The carrier-wheel is bolted on at *v*, and adjusted in its proper place by means of a slot. To the undermost iron cylinder, the first motion is communicated by any power, for which purpose either a rigger (driving pulley) is applied to its shaft at *u*, or a crank motion. If it be desired to operate with a heated calender, the undermost hollow cylinder may be filled with hot steam, admitted through a stuffing box at one end, and discharged through a stuffing box at the other, or by a red-hot iron roller.

Before passing through the press, they are slightly damped; this is done by a roller of brushes, which dips into the water, and throws it regularly on the cloth. They are then subjected to the powerful pressure of the calender rollers. The calendered pieces, by the powerful pressure of the rollers, are smooth and somewhat shining. There can be no doubt that cloth in this state looks to the best advantage. The pieces must, however, be put into a compact form. This is done by folding them into parcels, which are pressed by hydraulic power into firm and solid masses. Each parcel has

Digitized by Google

the mark of the manufacturer, or any device that he may choose to have, stamped upon it or bound round it.

Finishing.—Pure starch is not always used for the purpose of finishing. Fine clay, gypsum, or Spanish white, is mixed with the cloth; and if weight is desired to be given, sulphate of baryta is employed. Mr. John Leigh, of Manchester, has lately patented for this purpose the use of silicate of soda, which, for such goods as are not injured by alkalis, seems to answer the purpose at a very cheap rate. There can, however, be no doubt that too much attention is given to this finish for home goods, or for all purposes which require the goods to be washed: they assume a solidity of appearance which they do not possess when the finishing material is removed from the pores, and the cloth appears without disguise. In some instances, however, this finish is a peculiarity of the goods, and is almost as important as the cloth itself. For example: in the case of muslins, when they are dried at perfect rest, they have a rigid inelastic feeling, somewhat allied to that of thin laths of wood, and feel very rough to the touch. They are therefore dried by stretching the cloth, and moving the lines of selvage backward and forward, so as to cause the threads of weft to rub against each other and so as to prevent them becoming united as one piece. Goods dried in this manner have a peculiar spring, and such thick muslins are for a time possessed of great elasticity. Several pieces folded up in a parcel spring up from pressure like caoutchouc.

Mr. Ridgeway Bridson invented an apparatus for giving this peculiar finish to muslins. Formerly it was done entirely by the hand, and in Scotland only. Since the invention of this machine, this trade has become a very important one in the Manchester district.

Sometimes goods are finished by the beetle, which acts by repeated hammering. This peculiar action has been transferred to a roller by T. R. Bridson, and called the "Rotatory Beetle." It consists of a cylinder having alternately raised and depressed surfaces, and two other cylinders which press upon it, and alternately press the cloth and give a freedom as it passes between the rollers. This is similar to the rise and fall of the hammers or mallets in the beetling process.

Sometimes a stiff finish is wanted; then muslins are dried in the usual way.

Drying.—Figs. 185 and 186 represent a drying machine, with eleven cylinders, each 22 inches in diameter, capable of drying 1000 pieces of bleached calico in a day. *a*, represents cylinders heated with steam; *v*, vacuum-valves in ditto; *f*, frame for carrying cylinders; *c*, folding apparatus; *s* steam-pipe; *y*, gearing.

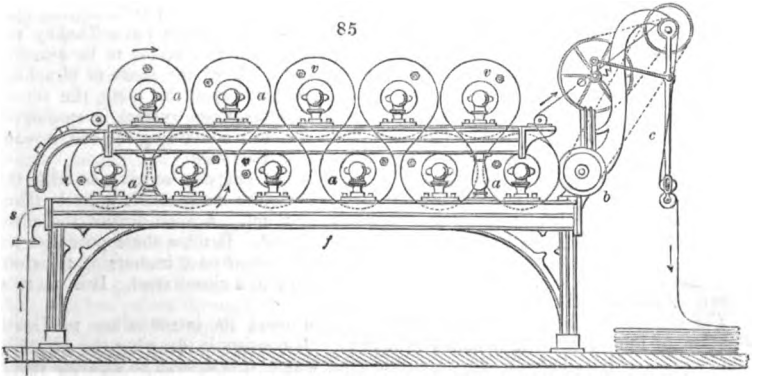

When goods are dried having a raised pattern, such as brocades, or any other, such as striped white shirting, only one side of the cloth is to be exposed; the pattern rises up from the heated surface on which the cloth is dried. For this reason, cylinders such as those just described cannot be used. Large wheels of cast iron are employed, consisting of two concentric cylinders, between which is a closed space heated by steam. The cloth is by this means heated on one side only, not passing from cylinder to cylinder, in which case the side next to the heating surface would be changed every time. The larger the cylinder or wheel, the more rapid is the drying, as there is more surface of cloth exposed to it at a time; it can, for the same reason, be turned more rapidly round. Well-finished goods will not rise when heated, except on the pattern. Messrs. Bridson have a large business in jacconets for artificial flowers on account of this peculiar finish. They are formed of a plain cotton cloth, but stand the pressure of hot irons without curling.

Digitized by Google

186

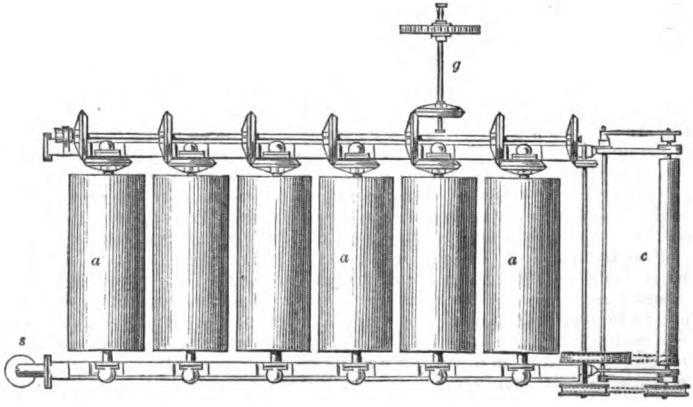

No essential difference is made in bleaching muslins, except that sometimes weaker solutions are employed for very tender goods. Mr. Barlow makes no difference as a rule in the strength given in describing his process; with very strong goods, he sometimes uses the liquids stronger.

It is desired occasionally to bleach goods which have coloured threads woven into them, or colours printed on them. In these cases great caution must be used. It is needful to use weak solutions, but more especially not to allow any one process to he continued very long, but rather to repeat it often than to lengthen it. This may be stated as a general rule in the bleaching of goods. It would indeed be possible to do the whole bleaching in one operation, but the cloth would be rotten. This arises from the fact that, at a certain strength, bleaching liquor or soda is able to destroy the fibre; but another and less strength does not act on the fibre, but only on such substances as colouring matters. This care is needed when printed goods which have a white ground are treated. The white ground takes up colour enough to destroy its brilliancy, and soaping does not always remove it. The bleaching then is effected by using bleaching liquor at ½ Twad. Some persons put a Turkey red thread into the ends of the pieces. The original use of this seems to be scarcely known among the manufacturers. It was used as a test of the mode of bleaching employed. If strong solutions be used, which are apt to spoil the cloth, the colour of the dyed threads will be discharged. When the separate system is employed, this is evaded easily; it is the practice to keep the ends containing the red threads out of the liquid, allowing them to rest on the side of the vessel.

Sometimes chlorate of potash is used for the same purpose, souring as with the bleaching powder. The colours may, in this manner, be made much more brilliant than before, although a little excess will discharge them. A good deal of the effect may be owing to the better white given to the ground. Besides these processes for bleaching, another was at one time introduced, which consisted of immersing the cloth in a solution of caustic alkali, and afterwards steaming in a close vessel. It is not now in use. Alkali of 1020° specific gravity was used.

The new or continuous process. This method owes its introduction to David Bentley, of Pendleton, who patented it in 1828. It consists in drawing the goods in one continuous line through every solution with which it is desired to saturate them. This is done by connecting the ends of all the pieces. The motion of rollers draws the chain of cloth thus formed in any desired direction, and through any number of solutions any given number of times. We shall allow him to use his own words

Fig. 187 (p. 338) is an end view of two such calenders, each having two larger rollers B and B 1, a smaller driving roller C, two racks D and D 1, placed upon two cisterns G and G 1, inside of which cisterns are two rollers E and E I, which rollers have four square ribs upon each, to shake the goods as they pass through the cisterns. At F is a frame upon which the batches of goods are placed upon rollers shown in *fig.* 188 (p. 338), where they are marked K, K, K, K. The calender cheeks are made fast at the feet, at the middle, and to the top of the building, having levers and weights H to give pressure to the calender bowls.

Near the end walls of the building are two rollers, one of which is shown at A; upon each of these is a soft cord used as a guide for conducting the goods through the machinery and cisterns. The operation is commenced by passing one end

Digitized by Google

187

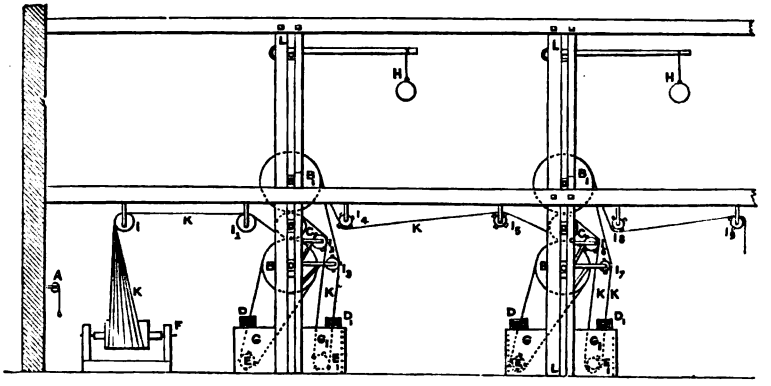

188

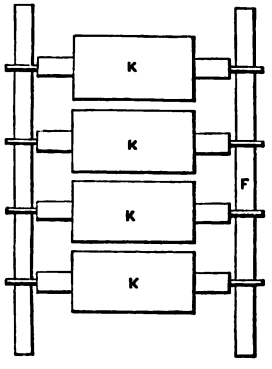

of the cord through the rollers B and C, down to cistern G, under roller E, through the furthermost division of rack D, and again through calender rollers at B and C, repeating the same, but observing to keep the cord tight, and to approach one division nearer in rack D each revolution until each division is occupied, when the end must pass over C, under and round B 1, down to and over the guide roller I 3, through the nearest division of rack D 1 into cistern G 1, under roller E 1, over guide roller I 2, and again over roller C, under and round B 1. This course must be repeated, observing as before to keep the cord tight, and to receive one division of rack D 1 every revolution, until each division of rack D 1 is occupied, when the end must pass over from B 1 under I 4. The cord now forms a sort of spiral worm round and through the machinery and cisterns, beginning at B, C, and ending at the top of B 1 to I 4, the number of revolutions being governed by the number of divisions in the racks D and D 1, so that if there were fifteen divisions in each rack there would be fifteen revolutions under C, round B through G, under E through D, and fifteen revolutions over C round B 1, over I 3 through D 1 and G 1, under E 1 over I 2, and again over C, passing from the top of B 1 to I 4; and by this means, if one end of the back of goods marked K, and placed upon the frame F (*fig.* 188), is fastened to the end of the guide cord, the goods will, when the calender is put in motion, be conducted and washed thirty times through the water in the cisterns, and squeezed thirty times through the calenders. As the operation proceeds and the guide cord passes through the calender, it is wound by hand upon roller A to prevent it from becoming entangled, and to keep it in readiness for the next operation. As soon as the first end of the goods has passed through *fig.* 188, and arrives at the guide roller I 4, it is detached from the end of the guide cord and attached to the guide cord at the other end, or with the opposite set of calenders. After this, by putting these in motion, the goods are washed and squeezed through its cisterns, which cisterns are supplied with hot and strong lime lye, and the goods passing over guide roller I 9, they are conveyed over other guide rollers to be placed for the purpose, and taken down by some person or some proper machinery into one of the boiling vessels, where, steam or fire heat being added, they are suffered to remain while the lime-boiling takes effect.

We need not follow the inventor into all the particulars. When the goods were sufficiently acted on by one solution, another solution was used, so that this mode of calendering not only was a method of moving the goods from place to place by means of rollers, but it was a method also of saturating goods thoroughly with a solution, and of washing them.

It was by a similar methed that Mr. Bentley bleached skeins of yarn, of linen, or of cotton. The skeins are looped together by tying any soft material round the middle of the first skein, which will leave the loops from one end of the next skein to pass half way through, and which will always leave other two loops, and by re-

Digitized by Google

peating which any quantity of skeins may be looped together, tying the last loop with another soft material.

The mode of saturating the goods with solutions is effected by the arrangement shown in *fig.* 189. Rapid motion and frequent pressure are introduced instead of a still soaking process.

189

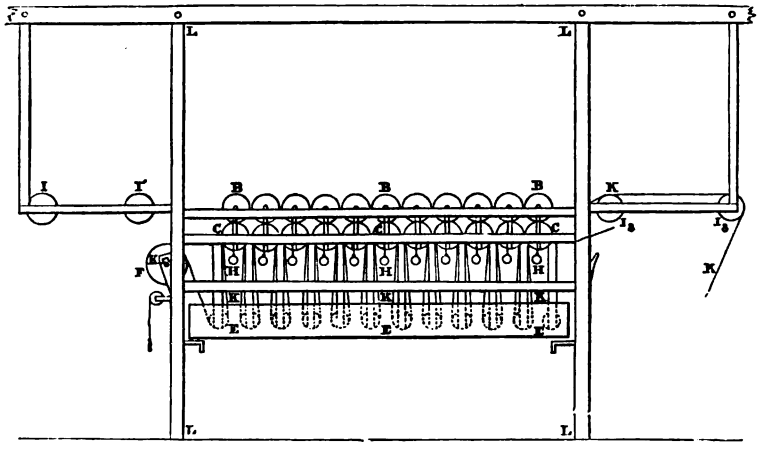

A is a roller for the guide cords; B, B, B, are eleven washing rollers; C, C, C are speed rollers; E, E, E are twelve rollers immersed in twelve divisions of the cistern G. The eleven staple-formed irons which pass through the frame rails on each side of the centres of the eleven rollers B, B, B, and the eleven rollers C, C, C, serve to stay these rollers in their places, at the same time allowing the eleven washing rollers B, B, B, to rise and fall according to the pressure by which they are held down by the eleven weights attached to these irons at H, and upon the bottom rail may be placed such staves, brushes, or rollers, as may be found necessary for holding and brushing the goods in the best manner to keep them straight during the different washings in water and bleaching liquors. The goods are prepared by steeping, as before described, and placed in batches at F, and passing under the immersing rollers E and the twelve divisions of cistern G, between the eleven speed rollers C and the eleven washing rollers B, as seen at K, are taken down straight and open into one of the vessels, and are then boiled by steam, which is succeeded by repeated washings alternately in water and bleaching liquors, until they are sufficiently bleached, as before described.

The elevation and ground-plan of a bleach-house and machinery capable of bleaching 800 pieces of 4 lbs. cloth per day (for best madder work), with the labour of one man and three boys, working from 6 until 4 o'clock, exclusive of singeing and drying, are represented in *figs.* 190 and 191 (p. 340). The letter *d* represents two lengths of cloth of 400 pieces each (end of pieces being stitched together by patent sewing machine made by Mather and Platt), making together 800 pieces, passing through washing machine, *g*, and from thence delivered over winch, *w*, into kier, *c*, — this operation occupies one hour, — where they are boiled for twelve hours in lime. They are then withdrawn by the same washing machine, *g*, washed, and passed into second kier, *b* (operation occupying one hour), where they are boiled for twelve hours in ashes and resin; again withdrawn by the same machine, *g*, washed, squeezed (see plan at U), and passed over winch, *e*, and piled at *h* (this operation occupies one hour). They are then taken from pile, *h*, and threaded through sour-machine, *e*, soured, passed over winch, *e''*, and piled at *k* (operation, one hour), where it remains in the pile for three hours. It is then squeezed at U, and washed through machine, *g* (an hour's operation), delivered into third kier, *a*, boiled for six hours, washed at *g*, squeezed at U (an hour's operation), and passed through *chemick-machine* (an hour's operation), and piled for one hour; after which it is soured again (an hour's operation), squeezed, and washed at *g* (an hour's operation), squeezed again at *f* (an hour's operation), and dried by machine at *p* (*fig.* 190).

There are several advantages in using the squeezing process so often in the above arrangement:—Firstly, The bowls of the washing maching are not so much damaged

Digitized by Google

190

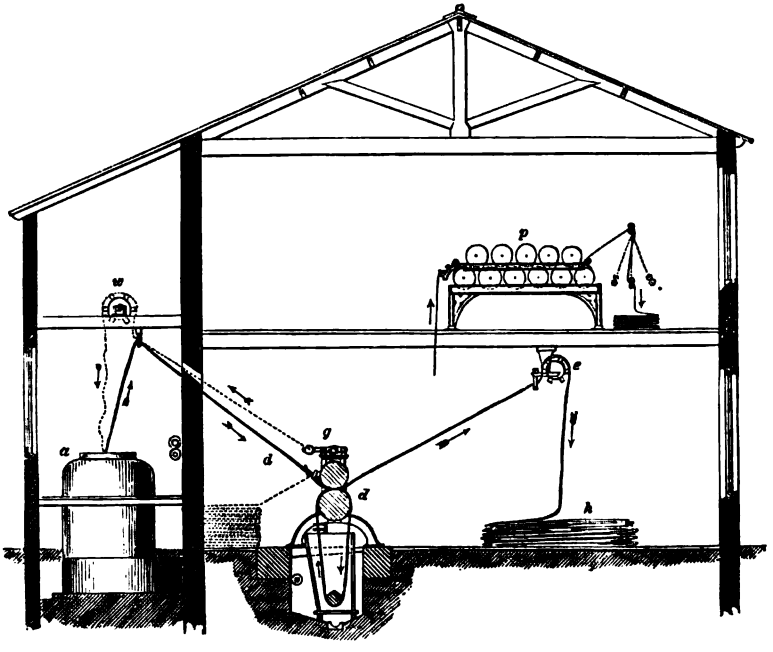

191

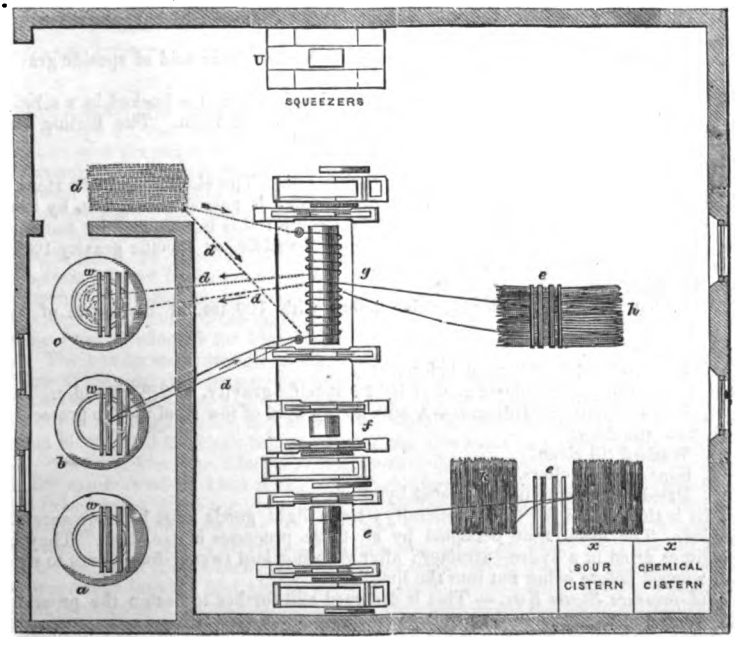

Digitized by Google

by the heavy pressure which is required to be applied, if no squeezers are used, in order to prepare the pieces for the sour and chemick machines: Secondly, A drier state of the cloth than can possibly be produced by the washing machine *alone*, thus fitting it to become better saturated with the chemick or sour: Thirdly, The piece passing from the souring to the washing machine, in this arrangement, carries with it *less* of the acid, and thus ensures a better washing with less water.

It may be observed, that the velocity of the above-mentioned machines is much higher than usual, experience having shown that the various operations are thus better performed than when running slower. The reason of this appears to be, firstly, that the piece, running at such velocity, carries with it, by reason of capillary attraction, a greater quantity of liquid to the nip of the bowls; secondly, the great velocity of the bowls, together with the greater quantity of water carried up, produces a more powerful current at the *nip* and down the ascending piece, thus penetrating to every fibre of it.

It may also be remarked, that the above-mentioned machines are not adapted to the bleaching of linen; for the latter cloth, not having the same elasticity as cotton, if it should become tight, would either be pulled *narrow* or torn.

In illustration of the continuous process as at present used, the plan of proceeding at Messrs. McNaughten, Barton, and Thom's, at Chorley, may be described.

1. In order that there may be no interruption in the process, the pieces are united in one continuous piece — each piece being about 30 yards, the whole varying with the weight of cloth — about 300 yards long. Each piece is marked with the name of the printer. This is sometimes done in marking-ink of silver, and sometimes in coal-tar, at the extremity of the piece. The pieces are rapidly tacked together by girls, who use in some establishments a very simple sewing machine. (See SEWING MACHINE.) The whole amount to be bleached at a time is united in one piece, and is drawn from place to place like a rope. To give them this rope form, the goods are drawn through an aperture whose surface is exceedingly smooth, being generally of glass or earthenware. Of these many are used in transferring the cloth from place to place. They serve instead of pulleys. The cloth when laid in a vessel is not thrown in at random, but laid down in a carefully made coil. The rope form enables the water to penetrate it more easily.

2. The pieces are singed.

3. They are boiled in the first kier. In this, 3500 lbs. of cloth have added to them 250 lbs. of caustic lime, 1 lb. of lime to 14 of cloth. The kier is cylindrical, 7 feet deep and 8 feet in diameter; as much water is added as will cover the cloth, about 500 gallons. This boiling lasts thirteen hours.

4. They are washed in the washing machine. Robinson and Young's machine is used.

5. They are soured in a similar machine with hydrochloric acid of specific gravity 1010·, or 2° of Twaddle.

6. The same amount of cloth being supposed to be used, it is bucked in a solution of soda-ash and resin, 170 lbs. of soda-ash to 30 lbs. of resin. The boiling lasts sixteen hours, the same amount of water being used.

7. Washed as before.

8. Passed through chloride of lime, or chemicked. The cloth is laid in a stone or wooden cistern, and a solution of bleaching powder is passed through it, by being poured over it and allowed to run into a vessel below; this is managed by continued pumping. This solution is about half a degree Twaddle, or specific gravity 1002·5. The cloth lies in it from one to two hours.

9. Washed.

10. Boiled again in a kier for five hours with 100 lbs. of carbonate of soda crystals.

11. Washed.

12. Put in chloride of lime as before.

13. Soured, in hydrochloric acid of 1012·5 specific gravity, or 2½° Twaddle.

14. Lies six hours on stillages.—A stillage is a kind of low stool used to protect the cloth from the floor.

15. Washed till clean.

16. Squeezed in rollers.

17. Dried over tin cylinders heated by steam.

This is the process for calico generally; some light goods must be more carefully handled. The usual time occupied by all these processes is five days. They are sometimes dried in a hydro-extractor; after singeing, laid twenty-four hours to steep, then washed before being put into the lime kier.

High-pressure Steam Kier. — This is designed still further to hasten the process of bleaching, and at the same time to improve it.

Digitized by Google

Fig. 192 is an elevation showing the arrangement of these kiers (which are recommended to be made of strong boiler-plate iron). One of these is shown in section. *a* and *b* are the kiers; *c* is a perforated platform, on which the goods to be bowked are

192

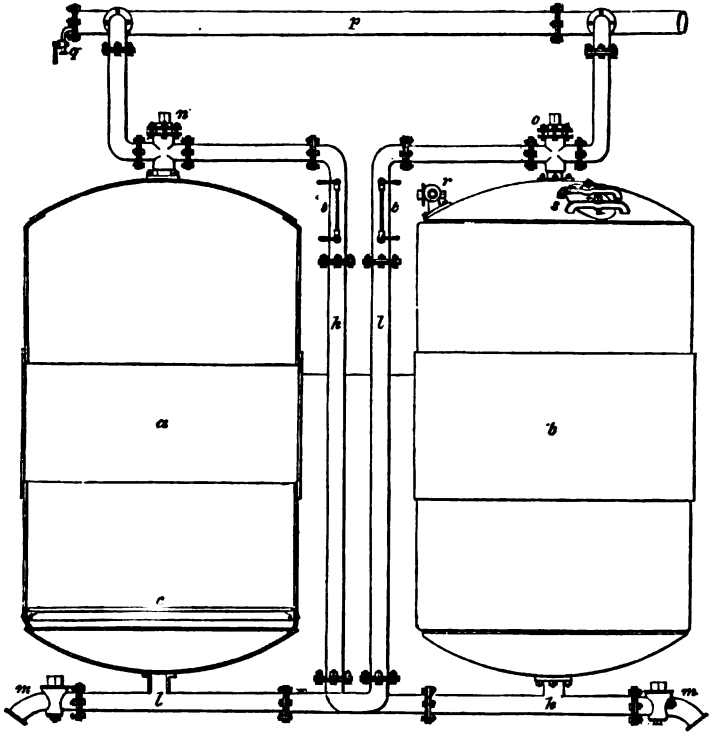

laid; *k k* is the pipe connecting the bottom of the kier *b* with the top of the adjoining kier, *a*; and *l*, *l*, the corresponding pipe connecting the opposite ends of the kiers *a* and *b*; *m m* are draw-off cocks, connected with the pipes *k* and *l*, by which the kiers can be emptied of spent liquor, water, &c.; *n* and *o* are ordinary two-way taps, by which the steam is admitted into the respective kiers from the main pipe, *p*, and the reversing of which shuts off the steam communication, and admits the bowking liquor as it becomes expelled from the adjoining kier; *q* is a blowing-off valve or tap; *r*, the pipe through which the bowking liquor enters into the kier; *s*, manhole (closed by two cross bars, secured by bolts and nuts) through which the goods are introduced and removed; *t t* are gauges, by which it is ascertained when the liquor has passed from one kier and has entered the other.

The process adopted for bleaching is as follows;

1. The box or water trough of the washing machine is then half filled with milk of lime of considerable consistence, and the goods are run through it, being carried forward by the winches and deposited in the kiers. The whole of the cloth in a kier is in one length, and a boy enters the vessel to lay it in regular folds until the kier is filled. All the cloth before entering the kier must pass through the lime.

2. When the kiers are filled, a grid of movable bars is laid on the top of the cloth, and the manhole of the kiers is closed. High-pressure steam is then admitted at the top; this presses down the goods and removes the lime water, which is drawn off at the bottom. At the same time the air is also removed from the goods and replaced by steam. When this is driven off, and nothing but steam issues from the tap at the bottom, 40 lbs. of lime, which have been previously mixed with 600 gallons of water, are introduced into the first kier in a boiling state. High-pressure steam is again admitted, which forces the lime liquor through the goods to the bottom of the vessel, then

Digitized by Google

up the tube *l*, and on to the goods in the second kier. The tap is then closed which admits steam into the first kier, and the steam is now sent into the second. The same process occurs, only in this case the liquid is sent again on to the top of the goods in the first kier. This process is continued about eight hours.

High Pressure and Distributing Kiers.—Mr. Barlow has effected an important improvement in his original high-pressure kiers by the addition of distributors.

Fig. 192*a* is an elevation showing a pair of kiers, fitted with distributors, &c. A and B are the kiers (which it is preferable to make of strong boiler-plate iron), the kier A being shown in section, and exhibiting the distributors, &c.

At the bottom of the kier is a plate of an umbrella shape, *c*. This plate spreads over about three-fourths of the bottom of the kier; it is perforated with holes all around its outer ridge, at *d d*, which rests upon the bottom of the kier; all the rest of the plate being solid. This plate is fastened in the centre to an iron block, *e*, which stands upon the bottom of the kier in the centre, over the outlet hole. The block *e* is pigeonholed at the bottom, so as to allow the liquor to pass from the kier. A socket is left in the upper part of the block *e*, to admit the insertion of the distributor *f*. This distributor is made of dimensions corresponding to the size of the kier; it is solid for some distance from the bottom, and above that is hollow and perforated as full as possible with holes until within a few inches of the top of the kier, where it is connected with the tap *g* (an ordinary two-way tap, which admits either steam or liquor, or shuts off both) by an inlet pipe, which dips for some distance inside the distributor. *o o* is the pipe connecting the top of the kier A with

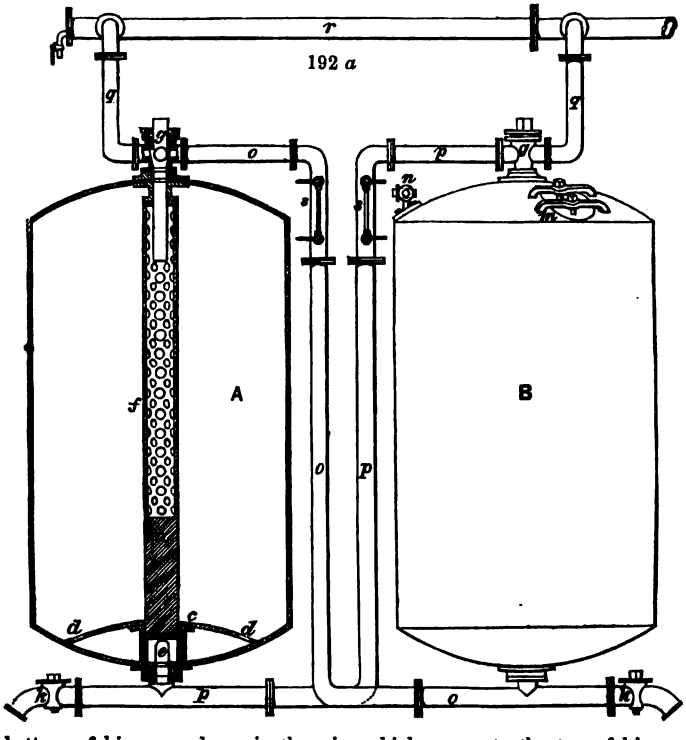

the bottom of kier B, and *p p* is the pipe which connects the top of kier B with the bottom of kier A; *q q* are steam pipes from the main pipe *r*; *m* is the manway, through which the goods are introduced and removed; *n* the pipe and tap, through which the working liquor enters the kier; *s s* are gauges, by which it is seen when the liquor has passed from one kier and has entered the other; *k k* are draw-off taps connected with the pipes *o* and *p*, by which the kiers can be emptied of spent liquor, water, &c.

The distributors give a circulation of liquor and steam from the centre of the kiers to the goods all around, while by the action of the umbrella plate the liquor is prevented escaping until all the goods are thoroughly saturated with it every time the

Digitized by Google

liquor is forced through them; they also greatly accelerate the circulation of the liquor through the goods, and there is no necessity for anything being laid upon the goods to keep them in their place. The kiers may be crammed full of goods, and either high or low pressure steam may be used in working them.

The process adopted for bleaching is as follows; it is the shortest and simplest in use.

1. After singeing, the water box or trough of the washing machine is half filled with milk and lime of considerable consistence, and the goods are run through it being carried forward by the winders and deposited in the kiers, a boy being in each kier, who lays the goods in regular folds until the kier is filled.

2. When the kiers are filled, the manholes are closed. High pressure steam is then admitted at the top, this presses down the goods and removes the lime water which is drawn off at the bottom, at the same time the air is also removed from the goods and replaced by steam. When this is driven off and nothing but steam issues from the tap at the bottom, 40 lbs. lime, which have been previously mixed with 600 gallons of boiling water, are introduced into the first kier in a boiling state. High pressure steam is again admitted, which forces the lime liquor through the goods to the bottom of the vessel, then up the pipe *o*, and on to the goods in the second kier. The tap is then closed which admits steam into the first kier, and the steam is now sent into the second. The same process occurs, only in this case the liquid is sent again on to the top of the goods in the first kier. This process is continued about five hours.

In this method each 7000 lbs. of cloth take into the kiers 2 cwts. of lime, which is equally distributed. The clear lime water which is blown out of the steam at the commencement contains only 3 to 4 lbs. of lime in solution. At the close of the operation the liquor has a specific gravity of 3½ to 4° Twaddle (1017·5 to 1020), instead of half that amount, or 1½ to 2° Twad. (1007·5 to 1010), as is usual.

3. When the liming is completed the steam pressure in the kiers is removed, the manway opened, and the cloth in the kier attached to the washing machine, which draws the goods out of the kiers and washes them.

4. The pieces are then passed by the winches through the souring machine, or soured by having muriatic acid of 2° Twaddle pumped upon them (1010). They must remain with the acid two to three hours, either steeped in it, or after having passed through it.

5. Again attach the cloth to the washing machine, and wash it well, passing it on by winches, as before, into the kier.

6. Introduce steam and drive off the air and the cold water; these are let out by the tap at the bottom: add then 224 lbs. of soda-ash and 112 lbs of resin, boiled in 600 gallons of water, for 7000 lbs. of cloth. Work the kiers by driving the liquid from one to the other as before; about five hours is a sufficient time. These proportions of soda may be varied. If the cloth is very strong a little more may be used (or if the cloth has been printed upon in the grey state, from having been used to cover the blanket of the calico-printing machine).

7. After this the cloth is passed through the washing machine, and then submitted to chloride of lime. This may be done either by the machine or by pumping. In either case it is an advantage to warm the bleaching liquid up to 80° or 90° F. The strength of the solution when the machine is used may be about ½° Twaddle, or 1002·5 specific gravity; but if the pump is used it must be much weaker. When the bleaching is for finishing white, milk of lime is added to the chloride, in order to retard the operation; the goods are also washed from the bleaching liquor before souring them. This causes a smaller escape of chlorine, and is a more careful method; it tends to preserve the headings, or the coloured threads, which are often put into the ends of pieces of cloth in order to see if the bleaching has been performed roughly or not. The original use of this has almost been forgotten, but these headings are still carefully preserved. This method preserves also the cloth, which is also less apt to be attacked by the chlorine.

If the cloth has been well managed, it will be almost white when it leaves the second kier containing the resinate of soda; it will therefore require very little decolourising. If the goods have been printed on, more chloride will be needed. The cloth should lie from two to eight hours in the liquor, or after saturation with it. The action is quickened if warmth is used. They are soured then, as before, in muriatic and sulphuric acid, at 2° Tw., for three or four hours; then wash for drying.

From what has been said, it will be seen that the operations of the bleacher are not so numerous as at first sight appears, when we call every washing a separate process; and although it really is so, it is managed so rapidly that it can scarcely be said to occupy time, and as it is carried on at the same time as the other processes, it scarcely can be said to give trouble. The work may be divided into:—

1. Singeing. 2. Bowking with lime. 3. Washing, souring, and washing. 4. Bowking with resinate of soda. 5. Washing and chlorinating. 6. Souring, washing, and drying.

Digitized by Google

Bleaching of Linen.

Linen contains much more colouring matter than cotton. The former loses nearly a third of its weight, while the latter loses not more than a twentieth. The fibres of flax possess, in the natural condition, a light grey, yellow, or blond colour. By the operation of rotting, or, as it is commonly called, water-retting, which is employed to enable the textile filaments to be separated from the boon, or woody matter, the colour becomes darker, and, in consequence probably of the putrefaction of the green matter of the bark, the colouring substance appears. Hence, flax prepared without rotting is much paler, and its colouring matter may be in a great measure removed by washing with soap, leaving the filaments nearly white. Mr. James Lee obtained a patent in 1812, as having discovered that the process of steeping and dew-retting is unnecessary, and that flax and hemp will not only dress, but will produce an equal if not greater quantity of more durable fibre, when cleaned in the dry way. Mr. Lee stated that, when hemp or flax plants are ripe, the farmer has nothing more to do than to pull, spread, and dry them in the sun, and then to break them by proper machinery. This promising improvement has apparently come to nought, having been many years abandoned by the patentee himself, though he was favoured with a special Act of Parliament, which permitted the specification of his patent to remain sealed up for seven years, contrary to the general practice in such cases.

The substance which gives steeped flax its peculiar tint is insoluble in boiling water, in acids, and in alkalis; but it possesses the property of dissolving in caustic or carbonated alkaline lyes, when it has by previous exposure been acted on only by chlorine. This process is effected in great measure by the influence of air in combination with light and moisture acting on the linen cloth laid upon the grass: but chlorine hastens the operation. In no case, however, is it possible to dissolve the colour completely at once, but there must be many alternate exposures to oxygen or chlorine, and alkali, before the flax becomes white. It is this circumstance alone which renders the bleaching of linen an apparently complicated business.

Old Method. — A parcel of goods consists of 360 pieces of those linens which are called Britannias. Each piece is 35 yards long, and weighs, on an average, 10 lbs.; the weight of the parcel is, in consequence, about 3600 lbs. avoirdupois weight. The linens are first washed, and then steeped in waste alkaline lye, as formerly described under these processes; they then undergo the following operations: —

1. Bucked with 60 lbs. pearl-ashes, washed, exposed on the field.
2. Ditto 80 ditto ditto ditto ditto.
3. Ditto 90 potashes ditto ditto ditto.
4. Ditto 80 ditto ditto ditto ditto.
5. Ditto 80 ditto ditto ditto ditto.
6. Ditto 50 ditto ditto ditto ditto.
7. Ditto 70 ditto ditto ditto ditto.
8. Ditto 70 ditto ditto ditto ditto.
9. Soured one night in dilute sulphuric acid; washed.
10. Bucked with 50 lbs. pearl-ashes, washed, exposed on the field.
11. Immersed in the chloride of potash or lime 12 hours.
12. Boiled with 30 lbs. pearl-ashes, washed, exposed on the field.
13. Ditto 30 ditto ditto ditto ditto.
14. Soured, washed.

The linens are then taken to the rubbing-board, and well rubbed with a strong lather of black soap, after which they are well washed in pure spring water. At this period they are carefully examined, and those which are fully bleached are laid aside to be blued, and made up for the market; while those which are not fully white are returned to be boiled, and steeped in the chloride of lime or potash; then soured, until they are fully white.

By the above process, 690 lbs. weight of alkali is taken to bleach 360 pieces of linen, each piece consisting of 35 yards in length; so that the expenditure of alkali would be somewhat less than 2 lbs. for each piece, were it not that some parts of the linens are not fully whitened, as above noted. Two pounds of alkali may therefore be stated as the average quantity employed for bleaching each piece of goods.

What is called the old method, or that used from about the introduction of bleaching powder, at the beginning of the century, till within ten or fifteen years, required bleaching on the grass; and the mode in which it was managed in Ireland and Scotland, where it held its ground longest, is as follows: —

1. They were rot-steeped in a weak solution of potash, at about 130° F., for two days, until the dressing used in manufacturing the cloth was removed.
2. Washed.

Digitized by Google

3. Boiled or bowked in potash lye, at ¼° Twaddle, for ten hours.
4. Washed, and the ends turned so that the whole might be equally exposed to the ley.
5. Boiled or bowked in a similar lye to the above for twelve hours.
6. Washed well.
7. Exposed on the grass for three days, and watered.
8. Taken up and soured with sulphuric acid, at 2° Tw., for four hours.
9. Taken up and washed well.
10. Boiled again for eight hours in potash lye, at 1° Tw., to which had been added black or soft soap, about 20 lbs. to a kier of about 300 gallons.
11. Washed.
12. Crofted, or exposed on the grass, as before.
13. Treated with chloride of lime at 1½° Tw., for four hours.
14. Washed.
15. Soured in sulphuric acid, at 2° Tw., for four hours.
16. Washed.
17. Boiled for six or seven hours with soap and lye, using in this case more soap and one-third less lye than in the former bowkings.
18. Drawn out and put through rub-boards. This is a kind of washing machine, made of blocks of wood, with hard-wood teeth. The goods are washed by it in a soapy liquid. The teeth moving rapidly, drive the soap into the cloth.
19. Boiled in the lye alone for six hours.
20. Washed.
21. Crofted, keeping them very clean, as this is the last exposure.
22. Treated with chloride of lime.
23. They are then starched, blued, and beetled, to finish them for the market. These operations last six weeks.

New System, as practised in Scotland and Ireland.—Directions given by an extensive Bleacher.

1. Wash.
2. Boil in lime water ten or twelve hours.
3. Sour in muriatic acid, of 2° Tw., for three, four, or five hours.
4. Wash well.
5. Boil with resin and soda-ash twelve hours.
6. Turn the goods, so that those at the top shall be at the bottom, and boil again as at No. 5.
7. Wash well.
8. Chemick, at ¼° Tw., or 1002·5, four hours.
9. Sour, at 2° Tw., or 1010° specific gravity.
10. Wash.
11. Boil in soda-ash ten hours.
12. Chemick again.
13. Wash and dry.

This is the system chiefly adopted when the goods are to be printed.

The following is the system practised in the neighbourhood of Perth, where the chief trade is in plain sheetings:—

1. Before putting them into operation, they are put up into parcels of about 35 cwts.
2. They are then steeped in lye for twenty-four hours.
3. Then washed and spread on the grass for about two days.
4. Boiled in lime water.
5. Turned, and boiled again in lime water, those at the top being put at the bottom. 60 lbs. of lime are used at a time, and about 600 gallons of water.
6. Washed, then soured in sulphuric acid of 2° Tw., or 1010° sp. gr., for four hours, then washed again.
7. Boiled with soda-ash for ten hours; 110 lbs. used.
8. Washed and spread out on the green, or crofted.
9. Boiled again in soda as before.
10. Crofted for three days.
11. They are then examined: the white ones are taken out; those that are not finished are boiled and crofted again.
12. Next, they are scalded in water containing 80 lbs. of soda-ash, and washed.
13. The chloride of lime is then used at ¼° Tw., or 1002·5 specific gravity.
14. Washed and scalded.
15. Washed and treated with chloride of lime.
16. Soured, for four hours, with sulphuric acid, at 2° Tw., or 1010° specific gravity
17. Washed.

Digitized by Google

If cloths lighter than sheetings are used, the washing liquids are used weaker. The great point is to observe them carefully during the process, in order to see what treatment will suit them best.

It will be seen that the process of bleaching linen is still very tedious; and although it may be managed in a fortnight, it is seldom that this occurs regularly for a great length of time. The action of the light introduces at once an uncertain element, as this varies so much in our climate. If, again, linen be long exposed to the air in a moist condition, it is apt to become injured in strength. To shorten the process, therefore, is important; and if no injurious agents are introduced, a shortening promises also to give increased strength to the fibre. It has not been found possible to introduce chlorine into linen bleaching at an early stage, as in the case of cotton; and the processes for purifying it without any chlorine render it so white that unskilled persons would call it as white as snow. The chlorine is introduced nearly at the end of the operation, after a series of boilings with alkalis, sourings, and exposures on the grass. If introduced at an earlier stage, the colour of the raw cloth becomes fixed, and cannot be removed. The technical term for this condition is "*set.*" Mr. F. M. Jennings, of Cork, has just patented a method which promises to obviate the difficulty. The peculiarity consists in using the alkali and the chloride of alkali at the same moment, thus giving the alkali opportunity to seize on the colouring matter as soon as the chloride has acted, and thereby preventing the formation of an insoluble compound. He prefers the chlorides of potash or soda. His plan is as follows:—

1. He soaks the linen in water for about twelve hours, or boils it in lime or alkali, or alkali with lime, and then soaks it in acid, as he uses soaps of resin in other mixtures—the alkalis being from 3° to 5° Tw., 1015°—1025° specific gravity.
2. Boils in a similar alkaline solution.
3. Washes.
4. Puts it into a solution of soda, of 5° Tw., 1025° specific gravity, adding chloride of soda until it rises up to from 6°–7° Tw. It is allowed to remain in this solution for some hours, and it is better if subjected to heating or squeezing between rollers, as in the washing machine.
5. He then soaks, sours, and washes.
6. He then puts it a second time into the solution of alkali and chloride.
7. Then washes, and boils again with soda. These operations, 6 and 7, may be repeated until the cloth becomes almost white.

The amount of exposure on the grass by this process is said to be not more than from one-half to one-fourth that required by the nsual method, or it may be managed so as entirely to supersede crofting.

Chevalier Claussen has opened up the filaments of flax by the evolution of gas from a carbonate in which the plant is steeped, and at the same time bleached by chloride of magnesia, but this has not been successful.

Bleaching of Silk.

Silk in its raw state, as spun by the worm, is either white or yellow of various shades, and is covered with a varnish which gives it stiffness and a degree of elasticity. For the greater number of purposes to which silk is applied, it must be deprived of this native covering, which was long considered to be a sort of gum. The operation by which this colouring matter is removed is called scouring, cleansing, or boiling. A great many different processes have been proposed for freeing the silk fibres from all foreign impurities, and for giving it the utmost whiteness, lustre, and pliancy; but none of the new plans has superseded, with any advantage, the one practised of old, which consists essentially in steeping the silk in a warm solution of soap; a circumstance placed beyond all doubt by the interesting experiments of M. Roard. The alkalis, or alkaline salts, act in a marked manner upon the varnish of silk, and effect its complete solution; the prolonged agency even of boiling water or soap and water destroys the brilliancy of silk. It would appear, however, that the Chinese do not employ this method, but something that is preferable. Probably the superior beauty of their white silk may be owing to the superiority of the raw material.

The most ancient method of scouring silk consists of three operations. For the first, or the *ungumming*, thirty per cent. of soap is dissolved in clean water at a boiling heat; then the temperature is lowered by the addition of a little cold water, by withdrawing the fire, or at least by damping it. The hanks of silk suspended upon horizontal poles over the boiler are now plunged into the soapy solution, kept at a heat somewhat under ebullition, which is an essential point; for, if hotter, the soap would attack the substance of the silk, and not only dissolve a portion of it, but deprive the whole of its lustre. The portions of the hanks plunged in the

Digitized by Google

bath get scoured by degrees; the varnish and the colouring matter are removed, and the silk assumes its proper whiteness and pliancy. Whenever this point is attained, the hanks are turned round upon the poles, so that the portion formerly in the air may be also subjected to the bath. As soon as the whole is completely ungummed, they are taken out, wrung by the peg, and shaken out; after which, the next step, called the *boil*, is commenced. About 25 lbs. or 35 lbs. of ungummed silk are enclosed in bags of coarse canvas, called *pockets*, and put into a similar bath with the preceding, but with a smaller proportion of soap, which may therefore be raised to the boiling point without any danger of destroying the silk. The ebullition is to be kept up for an hour and a half, during which time the bags must be frequently stirred, lest those near the bottom should suffer an undue degree of heat. The silk experiences in these two operations a loss of about 25 per cent. of its weight.

The third and last scouring operation is intended to give the silk a slight tinge, which renders the white more agreeable, and better adapted to its various uses in trade. In this way we distinguish the China white, which has a faint cast of red, the silver white, the azure white, and the thread white. To produce these different shades, we begin by preparing a soap-water so strong as to lather by agitation; we then add to it, for the China white, a little arnotto, mixing it carefully in; and then passing the silk properly through it, till it has acquired the wished-for tint. As to the other shades, we need only azure them more or less with a fine indigo, which has been previously washed several times in hot water, and reduced to powder in a mortar. It is then diffused through boiling water, allowed to settle for a few minutes, and the supernatant liquid, which contains only the finer particles, is added to the soap bath, in such proportion as may be requisite. The silk, on being taken out of this bath, must be wrung well, and stretched upon perches to dry; after which it is introduced into the sulphuring chamber, if it is to be made use of in the white state. At Lyons, however, no soap is employed at the third operation; after the boil, the silk is washed, sulphured, and azured, by passing through very clear river water properly blued.

The present practice in the silk-works in Lancashire is as follows:—

The Italian silk arrives in this country with a little soap in it, put in by the throwsters there, amounting to one drachm to a pound of silk. It is received here in hanks, and bleached in that state. The hanks are hung on sticks or small poles, about three pounds of silk being on each stick. The sticks being laid across a vessel, the silk hangs down, and in this way may be immersed in any liquid. The treatment of silk is then much more tender than that of cotton.

1. The hot lather is made with 3 lbs. of soap in 50 gallons of water; to this is added 1 lb. of soda crystals. The silk is kept in this lather at a temperature of from 175° to 190° F. for three quarters of an hour. It is then wrung or dried in the hydro-extractor (called hydro or whizzer in Lancashire works). 2. It is then, for the purpose of straightening it, rolled on a cocoa-nut roll-pin 4 in. in diameter, a little turn being given it occasionally, by the finger and thumb, to prevent entangling. 3. It is then put into bags of one yard square. The hanks are laid flat, and the bags stitched down. In this state they are boiled for 3½ hours, using for the same amount of water as before, 3 lbs. of soap to 20 lbs. of silk. 4. The silk is then washed or moved about by the hand in a cistern one yard wide and one deep, retaining as much soap as will make a pretty permanent lather. To this there is generally added a small quantity of archil, about ¼ oz. to 4 lbs. of silk. 5. It is then dried in the hydro-extractor. 6. It is then straightened and sulphured. The sulphuring is done in a small apartment, which should be very high. The size is frequently 10 feet square by 20 in height. The silk is hung up in it, and 4 lbs. of sulphur for each 40 lbs. of silk are put on the floor and set fire to. The room is closed as well as possible, and the silk is allowed to remain 4 hours. This is the bleaching, and it requires now only to be washed by rinsing three to four times in cold water. A little indigo blue is used to give it a pearly appearance. The use of archil, which has been mentioned, depends upon the shade of white, so to speak, which is wanted. 7. The silk is now dried by the hydro-extractor first, and then by exposing to a temperature of 85—90°. If heavily laden with gums, silk must be dried at a still cooler temperature. In this operation of bleaching, 1 lb. of good silk loses 4 oz.; but as it seldom arrives very pure, the usual loss to the pound of silk is 5 oz.

The first, or simmering, operation mentioned here, is not necessary for the white silk of China.

The silks intended for the manufacture of blondes and gauzes are not subjected to the ordinary scouring process, because it is essential, in these cases, for them to preserve their natural stiffness. We must therefore select the raw silk of China, or the whitest raw silks of other countries; steep them, rinse them in a bath of pure water, or in one containing a little soap; wring them, expose them to the vapour of

Digitized by Google

sulphur, and then pass them through the azure water. Sometimes this process is repeated.

Before the memoir of M. Roard appeared, extremely vague ideas were entertained about the composition of the native varnish of silk. He has shown that this substance, so far from being of a gummy nature, as had been believed, may be rather compared to bees' wax, with a species of oil and a colouring matter which exist only in raw silks. It is contained in them to the amount of from 23 to 24 per cent., and forms the portion of weight which is lost in the *ungumming*. It possesses, however, some of the properties of vegetable gums, though it differs essentially as to others. In a dry mass, it is friable and has a vitreous fracture; it is soluble in water, and affords a solution which lathers like soap; but when thrown upon burning coals, it does not soften like gum, but burns with the exhalation of a fetid odour. Its solution, when left exposed to the open air, is at first of a golden yellow, becomes soon greenish, and ere long putrefies, as a solution of animal matter would do in similar circumstances. M Roard assures us that the city of Lyons alone could furnish several thousand quintals of this substance *per annum*, were it applicable to any useful purpose.

The yellow varnish is of a resinous nature, altogether insoluble in water, very soluble in alcohol, and contains a little volatile oil, which gives it a rank smell. The colour of this resin is easily dissipated, either by exposure to the sun or by the action of chlorine: it forms about one fifty-fifth of its weight.

Bees' wax exists also in all the sorts of silk, even in that of China; but the whiter the filaments, the less wax do they contain.

M. Roard has observed that, if the silk be exposed to the soap-baths for some time after it has been stripped of its foreign matters, it begins to lose body, and has its valuable qualities impaired. It becomes dull, stiff, and coloured in consequence of the solution, more or less considerable, of its substance; a solution which takes place in all liquids, and even in boiling water. It is for this reason that silks cannot be alumed with heat; and that they lose some of their lustre in being dyed brown, a colour which requires a boiling hot bath. The best mode, therefore, of avoiding these inconveniences, is to boil the silks in the soap-bath no longer than is absolutely necessary for the scouring process, and to expose them in the various dyeing operations to a temperature as moderate as may be sufficient to communicate the colour. When silks are to be dyed, much less soap should be used in the cleansing, and very little for the dark colours. According to M. Roard, raw silks, white or yellow, may be completely scoured in one hour, with 15 lbs. of water for one of silk, and a suitable proportion of soap. The soap and the silk should be put into the bath half an hour before its ebullition, and the silk should be turned about frequently. The dull silks, in which the varnish has already undergone some alteration, never acquire a fine white until they are exposed to sulphurous acid gas. Exposure to light has also a very good effect in whitening silks, and is had recourse to, it is said, with advantage, by the Chinese.

Baumé contrived a process which does not appear to have received the sanction of experience, but which may be a guide in the right way. He macerates the yellow raw silk in a mixture of alcohol at 36° (sp. gr. 0837) and one thirty-second part of pure muriatic acid. At the end of forty-eight hours, it is as white as possible, and the more so, the better the quality of silk. The loss which it suffers in this menstruum is only one fortieth; showing that nothing but the colouring matter is abstracted. The expense of this menstruum is the great obstacle to Baumé's process. The alcohol, however, might be in a very great measure recovered, by saturating the acid with chalk, and redistillating.

Bleaching of Wool.

Wool, like the preceding fibrous matter, is covered with a peculiar varnish, which impairs its qualities, and prevents it from being employed in the raw state for the purposes to which it is well adapted when it is scoured. The English give the name *yolk*, and the French *suint*, to that native coat: it is a fatty unctuous matter, of a strong smell, which apparently has its chief origin in the cutaneous perspiration of the sheep; but which, by the agency of external bodies, may have undergone some changes which modify its constitution. It results from the experiments of M. Vauquelin, that the *yolk* is composed of several substances; namely, 1, a soap with basis of potash, which constitutes the greater part of it; 2, of a notable quantity of acetate of potash; 3. of a small quantity of carbonate, and a trace of chloride of potassium; 4, of a little lime in an unknown state of combination; 5, of a species of sebaceous matter, and an animal substance to which the odour is due. There are several other accidental matters present on sheep's wool.

The proportion of yolk is variable in different kinds of wool, but in general it is

Digitized by Google

more abundant the finer the staple; the loss by scouring being 45 per cent. for the finest wools, and 35 per cent. for the coarse.

The yolk, on account of its soapy nature, dissolves readily in water, with the exception of a little free fatty matter, which easily separates from the filaments, and remains floating in the liquor. It would then appear sufficient to expose the wools to simple washing in a stream of water; yet experience shows that this method never answers so well as that usually adopted, which consists in steeping the wool for some time in simple warm water, or in warm water mixed with a fourth of stale urine. From 15 to 20 minutes of contact are sufficient in this case, if we heat the bath as warm as the hand can bear it, and stir it well with a rod. At the end of this time the wool may be taken out, set to drain, then placed in large baskets, in order to be completely rinsed in a stream of water.

It is generally supposed that putrid urine acts on the wool by the ammonia which it contains, and that this serves to saponify the remainder of the fatty matter not combined with the potash, although M. Vauquelin gave another opinion. Fresh urine contains a free acid, which, by decomposing the potash soap of the yolk, counteracts the scouring operation.

If wools are better scoured in a small quantity of water than in a great stream, we can conceive that this circumstance must depend upon the nature of the yolk which, in a concentrated solution, acts like a saponaceous compound, and thus contributes to remove the free fatty particles which adhere to the filaments. It should also be observed that too long a continuance of the wool in the yolk water, hurts its quality very much, by weakening its cohesion, causing the filaments to swell, and even to split. It is said then to have lost its *nerve*. Another circumstance in the scouring of wool, that should always be attended to, is never to work the filaments together to such a degree as to occasion their felting; but in agitating we must merely push them slowly round in the vessel, or press them gently under the feet. Were it at all felted, it would neither card nor spin well.

As the heat of boiling water is apt to decompose woollen fibres, we should be careful never to raise the temperature of the scouring bath to near this point, nor, in fact, to exceed 140° F. Some authors recommend the use of alkaline or soapy baths for scouring wool, but practical people do not deviate from the method above described.

When the washing is completed, all the wool which is to be sent white into the market, must be exposed to the action of sulphurous acid, either in a liquid or a gaseous state. In the latter case, sulphur is burned in a close chamber, in which the wools are hung up or spread out; in the former, the wools are plunged into water moderately impregnated with the acid. (See SULPHURING.) Exposure on the grass may also contribute to the bleaching of wool. Some fraudulent dealers are accused of dipping wools in butter-milk, or chalk and water, in order to whiten them and increase their weigh.

Wool is sometimes whitened in the fleece, and sometimes in the state of yarn; the latter affording the best means of operating. It has been observed that the wool cut from certain parts of the sheep, especially from the groin, never bleaches well.

After sulphuring, the wool has a harsh crispy feel, which may be removed by a weak soap-bath. To this also the wool-comber has recourse when he wishes to cleanse and whiten his wools to the utmost. He generally uses a soft or potash soap, and after the wool is well soaked in the warm soap-bath, with gentle pressure he wrings it well with the help of a hook, fixed at the end of his washing tub, and hangs it up to dry.

The actual operations of purifying wool are so blended with the methods of weaving and working it, that, to show it fully, I shall give here the process of preparing flannels, out of which the parts relating to cleansing may be taken.

1. The wool is weighed out into parcels of 120 lbs. Add, on an average, 20 to 21 lbs. or 10 quarts of oil—rape oil or olive, or mixed, or, as is very common now, oleic acid, which may be so used as not to be hurtful to the machinery in this condition. This was introduced by Mr. M'Dougall.

2. It is then devilled or willowed, carded, slubbed, and spun.

The warp portion is made at this stage if wanted.

3. Scoured in the warp with urine and hot water, occasionally using a little ammonia.

4. Sized with a mineral sizing, and put into the looms.

5. If spun for weft, it is soaked, when on the bobbin, with cold water in a cistern, an air-pump being used to extract the air from the threads and to compel the water to enter.

6. The water is then removed by a revolving water-extractor. This process leaves the weft full and soft.

Digitized by Google

Skin wool, so called, is taken from the skin by means of lime, which makes the oil stiff, forming a compound.

7. The piece being now woven is grey. It is sent to the finishing or fulling mill, sprinkled over with urine and pigs' dung, and put under the fulling hammers until equally wet.

8. It is then washed out or scoured with cold water, raised with teasels, dried out of doors or in a stove.

Treated a little differently, accordingly as Welsh or Lancashire is wanted.

9. It is then sprinkled again with soap-and-water, and milled one to two hours in the fulling stock.

Three quarters to 1 lb. of soap is given for each piece.

10. Cleared with cold water.

11. Hung up wet in a sulphur stove, several pots of sulphur lighted. The door is shut till morning. Washed four to six hours in cold water, treated with finely-ground indigo, dried, and a little further raised, pressed, and rolled up for sale.

If the flannel is Welsh, it is dried and sprinkled with fullers' earth (instead of the soap-and-water used for the Lancashire), well milled for some time, and then cleared in cold water. It is then put into a cistern filled with water, having some soap thrown in as well as a few cakes of Prussian blue. This dipping is repeated three or four times, and between each the flannel is milled in the fulling stock. This levels the colour. When blue enough, the pieces are dried and made up for sale.

It appears that Welsh flannel is not sulphured; the cleaning is done entirely by ammonia.

Sulphuring.—In the usual mode of sulphuring the cloth is hung on pegs or rails in rooms which are called the sulphur chambers or stoves. An iron pot containing sulphur is placed in each corner of the room, and the sulphur inflamed. The door is then shut and clayed. By the morning the process is finished, and the door is opened. This mode is objected to, because the sulphur, not being properly burnt, lodges in the cloth, and acts injuriously on it in the processes of dyeing or printing. Sparks also are apt to rise up and injure the pieces, the sulphur not being pure, and burning irregularly. Drops also of water impregnated strongly with sulphurous acid are apt to fall from the roof, doing injury to the cloth.

To avoid these inconveniences Mr. Thom has invented a method by which the cloth is rapidly carried through the sulphuring chamber, and subjected to the influence of the vapour on the principle of the washing machine. A great deal of time and space is of course saved; it is on the same principle as the washing apparatus, vapour being used instead of water. This has not yet been applied to thick woollen. See CALICO PRINTING.

BLEACHING OF MATERIALS FOR PAPER.

The bleaching of paper is conducted on the same principle as the bleaching of cotton. Paper is made principally of two materials, cotton and flax, generally mixed. The cotton waste of the mills, which is that inferior portion which has become too impure for spinning, or otherwise deteriorated, and cotton rags are the principal, if not the only, sources of the cotton used by paper makers. The waste is sorted by hand, the hard and soft being separated, and all accidental mixtures which occur in it are removed. This is done at first roughly on a large lattice, which is a frame of wire cloth, having squares of about three-quarters of an inch through which impurities may fall. It is then put into a duster, which is a long rectangular box, it may be ten feet long, lying horizontally, the inside diameter about two feet, and covered with wire gratings running horizontally, leaving openings of half an inch in width. As this revolves, the waste is thrown from one angle to the other, and throws out whatever dust or other material falls into the holes or spaces. The fibrous matter has little tendency to separate from the mass, which is somewhat agglutinated by being damp, chiefly from the oil obtained during the processes in the cotton mill. A second duster, however, is used to retain whatever may be of value; it is a kind of riddle. It is then transferred to the lattices, which are a series of boxes covered with wire gauze, the meshes of which are about half an inch square, and so arranged as to form a series of sorting tables. The sorting generally is done by young women. Each table has a large box or basket beside it, into which the sorted material is thrown; this is removed when filled, by being pushed along a railroad or tramway. Pieces of stone, clay, leather, wood, nails, and other articles, are taken out. The cotton is then put into a devil similar to that which is used in cotton machinery, but having larger, stronger teeth, which tear it up into small fragments.

The rags are sorted according to quality, woollen carefully removed, and all the unavailable material sent back to the buyer. They are then chopped up by a knife,

Digitized by Google

on the circumference of a heavy wheel, into pieces of an inch wide, devilled, and dusted.

The rags and the cotton waste are bleached in a similar manner. The cotton is put into kiers of about ten feet in diameter, of a kind similar to those described, and boiled with lime. The amount of lime used is about 6 lbs. to a cwt. of of cotton or rags, but this varies according to the impurity. The lime removes a great amount of impure organic matter, and, as in bleaching, cotton cloth lays hold of the fatty matter, of which there is a great deal in the waste. When taken out, it is allowed to lie from two or three hours. The appearance is not much altered; it appears as impure as ever.

It is then put into the rag-engine and washed clean. This is a combined washing machine and filter, the invention of Mr. Wrigley, near Bury. The washing may last an hour and a half, or more. See PAPER.

The cotton has now a bright grey colour, and looks moderately clean. It is full of water, which is removed by a hydraulic press, the cotton being put into an iron cylindrical box with perforated sides. It is then boiled in kiers or puffing boilers, where soda-ash is used, at the rate of 4 to 5 lbs. a cwt. Only as much water is used as will moisten the goods thoroughly. Much water would weaken the solution and render more soda necessary. It is then washed again in the rag-engine; afterwards put into chloride of lime, acidified as in cotton bleaching, and washed again in the rag-engine.

The cotton rags are treated in a similar manner. The coloured rags are treated separately, requiring a different treatment according to the amount of colour; this consists chiefly in a greater use of chloride of lime.

Some points relating to bleaching are necessarily treated of under CALICO PRINTING.

BLEACHING POWDER. Chloride of Lime (*which see*).

BLEAK. (*Cyprinus alburnus.*) The scales of this fish are used for making the essence of pearl, or *essence d'orient*, with which artificial pearls are manufactured. In the scales of the fish the optical effect is produced in the same manner as in the real pearl, the grooves of the latter being represented by the inequalities formed by the margins of the concentric laminæ of which the scales are composed. These fish are caught in the Seine, the Loire, the Saone, the Rhine, and several other rivers. They are about four inches in length, and are sold very cheap after the scales are washed off. It is said that 4000 fish are necessary for the production of a pound of scales, for which the fishermen of the Chalonnois get from 18 to 25 livres.

The pearl essence is obtained merely by well washing the scales which have been scraped from the fish in water, so as to free them from the blood and mucilaginous matter of the fish. See PEARLS, ARTIFICIAL.

BLENDE, from *Blenden*, Germ. to dazzle. Sulphide or sulphuret of zinc, is a common ore of zinc, composed of zinc 67, sulphur 33; but it usually contains a certain proportion of the sulphide of iron, which imparts to it a dark colour, whence the name of "Black Jack," applied to it by the Cornish miner. The ore of this country generally consists of zinc 61·5, iron 4·0, sulphur 33·0. Blende occurs either in a botryoidal form or in crystals (often of very complex forms), belonging to the tetrahedal division of the monometric system. H = 3·5 to 4. Specific gravity = 3·9 to 4. See ZINC.—H. W. B.

In some districts the presence of the sulphide of zinc is regarded by the miners as a favourable indication, hence we have the phrase, "*Black Jack rides a good horse.*" In other localities it is thought to be equally unfavourable, and the miners say, "*Black Jack cuts out the ore.*" For many years the English zinc ores were of little value, the immense quantity of zinc manufactured by the Vieille Montagne company, and sent into this country, being quite sufficient to meet the demand. Beyond this, there was some difficulty in obtaining zinc which would roll into sheets, from English sulphides.

Most of the zinc obtained from blende is used in the manufacture of brass. Dana has given the following analyses of varieties of blende:—

	Sulphide of Zinc.	Sulphide of Iron.
Charente - - - - - - -	82·76	13·71
English - - - - - - -	91 8	6·4

Pure blende is a mineralogical rarity; the white and colourless variety of New Jersey, United States, was analysed by the late T. H. Henry, and found to be absolutely pure, with the exception of a trace of cadmium. Blende nearly always contains sulphide of iron. In 13 out of 16 analyses of blende from different localities recorded by Rammelsberg, iron is present in proportions varying from 1·18 to

Digitized by Google

18·1 per cent. Copper occasionally occurs in blende, but rarely above 1 per cent. Cadmium is a frequent, if not a general constituent of blende. The blende from the King William mine at Clausthal contains, according to Kuhlemann, 0·63 per cent. of antimony, 0·79 of cadmium, and 0·13 of copper, besides 1·18 of iron. Blende is met with in association with galena. Iron pyrites and copper pyrites, from which it should be dressed as clean as possible, although in this there is some difficulty, owing to the very close approximation of the specific gravities of these ores. Blende is occasionally argentiferous, and sometimes sufficiently so to allow of the profitable extraction of the silver. In one of the mines in the Chiverton district, near Truro, Cornwall, some very fine examples of this argentiferous blende has been discovered. In one of the zinc ores of Silesia, the new metal INDIUM has been discovered by the aid of spectrum analysis. See INDIUM. Plattner states that blende occasionally contains traces of tin and manganese. (*Percy's Metallurgy.*) The red varieties of blende often contain from 2 to 3 per cent. of sulphide of cadmium, especially that which is found at Marmato, near Popayan (see MARMATITE.) Dana has given the following analyses of varieties of Blende.

	Sulphur.	Zinc.	Iron.	Cadmium.
Carinthia - - -	32·10	64·22	1·32	trace
New Hampshire - -	32· 6	52·00	10·0	3·2
New Jersey - -	32·22	67·46	- -	trace
Tuscany - - -	32·12	48·11	11·44	1·23

Production of Zinc Ore in the United Kingdom since 1860. *Showing the produce of Districts.*

	1860	1861	1862	1863	1864	1865
	Tons.	Tons.	Tons.	Tons.	Tons.	Tons
CORNWALL - -	4,772	5,694	1,232	1,700	890	1,084
DEVONSHIRE - -	217	50	25	73	58	35
CUMBERLAND - -	557	596	508	683	594	711
DERBYSHIRE - -	1,470	1,225	1,500	1,250	794	1,000
SHROPSHIRE - -	- -	- -	- -	209	102	165
CARDIGANSHIRE - -	2,230	1,807	335	757	299	715
DENBIGHSHIRE - -	1,125	1,000	710	837	1,721	2,828
ANGLESEA - - -	- -	- -	- -	550	- -	- -
CARNARVONSHIRE -	27	240	109	- -	29	- -
MERIONETHSHIRE, &c.	- -	- -	- -	- -	- -	161
FLINTSHIRE - -	1,411	1,250	709	767	728	941
CAERMARTHENSHIRE -	- -	- -	78	678	964	590
ISLE OF MAN - -	3,181	3,255	691	2,298	5,363	5,488
IRELAND - - -	580	890	1,597	3,892	3,500	4,040

Summary of Zinc Produce in the United Kingdom, and of Zinc imported.

	Zinc ores.	Value.	Imports.		
			Zinc or Spelter.	Lapis Calaminaris.	Oxide of Zinc.
	Tons.	£	Tons.	Tons.	Tons.
1856 - - - -	9,003	27,445	- -	- -	- -
1857 - - - -	9,289	30,982	- -	- -	- -
1858 - - - -	11,556	36,199	23,725	2,012	533
1859 - - - -	13,039	37,707	30,214	5,083	1,096
1860 - - - -	15,552	39,631	23,481	4,368	935
1861 - - - -	15,770	31,112	24,851	6,369	1,107
1862 - - - -	7,497	16,050	23,709	1,481	1,552
1863 - - - -	18,699	32,219	34,572	1,834	2,065
1864 - - - -	15,047	46,562	31,281	2,621	1,267
1865 - - - -	17,842	52,478	30,685	5,158	1,506

Digitized by Google

BLEU DE LYON. See ANILINE BLUE.

BLEU DE PARIS. See ANILINE BLUE.

BLISTERED COPPER ORE. A botryoidal variety of copper pyrites, which has been found at the copper mines in the neighbourhood of Camborne, in remarkably fine masses. Of late years it has been but rarely found in those mines. See COPPER.

BLISTER-STEEL. Bars of steel which exhibit blister-like protuberances. These blisters have been supposed by some to be due to the presence of silicon or carbon in a gaseous state, but this is very doubtful. The question still requires careful investigation. See STEEL.

BLIND COAL, a name given to ANTHRACITE (*which see*).

BLOCK MANUFACTURE. Though the making of ships' blocks belongs rather to a dictionary of engineering than of manufactures, it may be expected that some account should be given of the automatic machinery for making blocks, so admirably devised and mounted by Sir M. I. Brunel, for the British Navy, in the dockyard of Portsmouth.

The series of machines and operations are as follows:—

1. *The straight cross-cutting saw.*—The log is placed horizontally on a very low bench, which is continued through the window of the mill into the yard. The saw is exactly over the place where the log is to be divided. It is let down, and suffered to rest with its teeth upon the log, the back still being in the cleft of the guide. The crank being set in motion, the saw reciprocates backwards and forwards with exactly the same motion as if worked by a carpenter, and quickly cuts through the tree. When it first begins to cut, its back is in the cleft in the guide, and this causes it to move in a straight line; but before it gets out of the guide, it is so deep in the wood as to guide itself; for in cutting across the grain of the wood, it has no tendency to be diverted from its true line by the irregular grain. When the saw has descended through the tree, its handle is caught in a fixed stop, to prevent its cutting the bench. The machine is thrown out of gear, the attendant lifts up the saw by a rope, removes the block cut off, and advances the tree to receive a fresh cut.

2. *The circular cross-cutting saw.*—This saw possesses universal motion; but the axis is always parallel to itself, and the saw in the same plane. It can be readily raised or lowered, by inclining the upper frame on its axis; and to move it sidewise, the saw frame must swing sidewise on its joints which connect it with the upper frame. These movements are effected by two winches, each furnished with a pair of equal pinions, working a pair of racks fixed upon two long poles. The spindles of these winches are fixed in two vertical posts, which support the axis of the upper frame. One of these pairs of poles is jointed to the extreme end of the upper frame; therefore, by turning the handle belonging to them, the frame and saw are elevated or depressed; in like manner, the other pair is attached to the lower part of the saw frame, so that the saw can be moved sidewise by means of their handles, which then swing the saw from its vertical position.

These two handles give the attendant a complete command of the saw, which we suppose to be in rapid motion, the tree being brought forward and properly fixed. By one handle, he draws the saw against one side of the tree, which is thus cut into (perhaps half through); now, by the other handle, he raises the saw up, and by the first-mentioned handle he draws it across the top of the tree, and cuts it half through from the upper side; he then depresses the saw and cuts half through the next side; and lastly a trifling cut of the saw, at the lower side, completely divides the tree, which is then advanced to take another cut.

The great reciprocating saw is on the same principle as the saw mill in common use in America.

3. *The circular ripping saw* is a thin circular plate of steel, with teeth similar to those of a pit saw, formed in its periphery. It is fixed to a spindle placed horizontally, at a small distance beneath the surface of a bench or table, so that the saw projects a few inches above the bench through a crevice. The spindle being supported in proper collars has a rapid rotatory motion communicated to it by a pulley on the opposite end, round which an endless strap is passed from a drum placed overhead in the mill. The block cut by the preceding machine from the end of the tree is placed with one of the sides flat upon the bench, and thus slides forward against the revolving saw, which cuts the wood with a rapidity incredible to anyone who has not seen these or similar machines.

4. *Boring machine.*—The blocks prepared by the foregoing saws are placed in the machine represented in *fig.* 193. This machine has an iron frame, A A, with three legs, beneath which the block is introduced, and the screw near B being forced down upon it, confines it precisely in the proper spot to receive the borers D and E. This spot is determined by a piece of metal fixed perpendicularly just beneath the point of the borer E, shown separately on the ground at X; this piece of metal adjusts the position

Digitized by Google

for the borer D, and its height is regulated by resting on the head of the screw *x*, which fastens the piece X down to the frame. The sides of the block are kept in a parallel position, by being applied against the heads of three screws tapped into the double leg of the frame A. The borer D is adapted to bore the hole for the centre pin in a direction exactly perpendicular to the surface resting against the three screws; the other, at E, perforates the holes for the commencement of the sheave holes. Both borers are constructed in nearly the same manner; they are screwed upon the ends of small mandrels, mounted in frames similar to a lathe. These frames, G and H, are

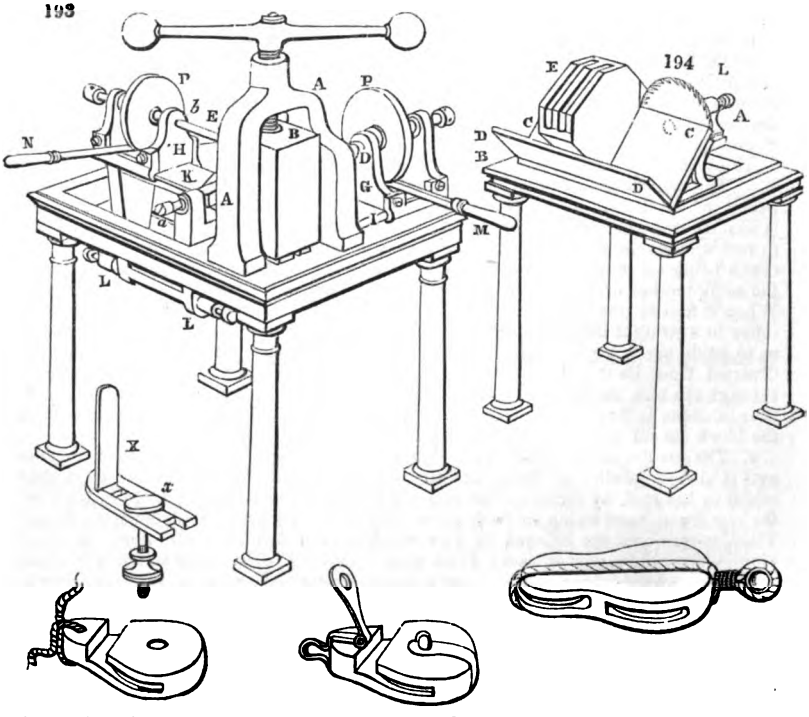

fitted with sliders upon the angular edges of the flat broad bars, I and K. The former of these is screwed fast to the frame; the latter is fixed upon a frame of its own, moving on the centre screws at L L, beneath the principal frame of the machine. By this means the borer E can be moved within certain limits, so as to bore holes in different positions. These limits are determined by two screws, one of which is seen at *a*; the other being on the opposite side is invisible. They are tapped through fixed pieces projecting up from the frame. A projecting piece of metal, from the under side of the slider K of the borer E, stops against the ends of these screws, to limit the excursion of the borer. The frames for both borers are brought up towards the block by means of levers M and N. These are centred on a pin, at the opposite sides of the frame of the machine, and have oblong grooves through them which receive screw pins, fixed into the frames G and H, beneath the pulleys P P, which give motion to the spindles.

5. *The mortising machine* is a beautiful piece of mechanism, but too complicated for description within the limits prescribed to this article.

The corner saw, *fig.* 194, consists of a mandrel mounted in a frame A, and carrying a circular saw L upon the extreme end of it. This mandrel and its frame being exactly similar to those at G and H, *fig.* 193, do not require a separate view, although they are hidden behind the saw, except the end of the screw, marked A. This frame is screwed down upon the frame B B of the machine, which is supported upon four columns. C C, D D, is an inclined bench, or a kind of trough, in which a block is laid, as at E, being supported on its edge by the plane C C of this bench, and its end kept up to its position by the other part of the bench D D.

By sliding the block along this bench, it is applied to the saw, which cuts off its angles, as is evident from the figure, and prepares it for the shaping engine. All the

Digitized by Google

four angles are cut off in succession, by applying its different sides to the trough or bench. In the figure, two of them are drawn as being cut, and the third is just marked by the saw. This machine is readily adapted to different sizes of blocks, by the simple expedient of laying pieces of wood of different thickness against the plane D D, so as to fill it up, and keep the block nearer to or farther from the saw; for all the blocks are required to be cut at the same angle, though, of course, a larger piece is to be cut from large than from small blocks. The block reduced to the state of E is now taken to.

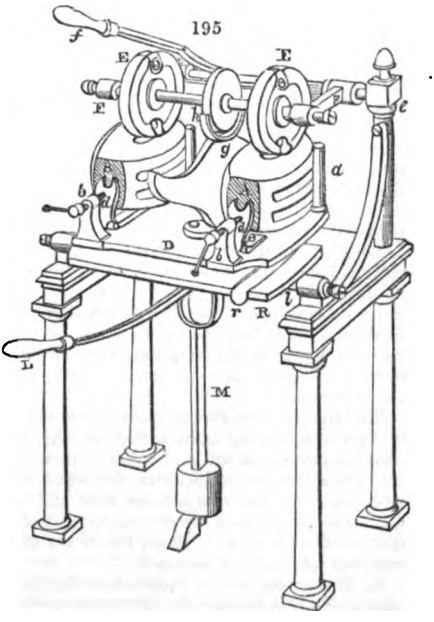

7. *The shaping machine.* — A great deal of the apparent complication of this figure arises from the iron cage which is provided to defend the workmen, lest the blocks, which are revolving in the circles or chuck with an immense velocity, should be loosened by the action of the tool, and fly out by their centrifugal force. Without this provision, the consequences of such an accident would be dreadful, as the blocks would be projected in all directions, with an inconceivable force.

8. *The scoring engine* receives two blocks as they come from the shaping engine, and forms the groove round the longest diameters for the reception of their ropes or straps, as represented in the two snatch blocks and double block, under *figs.* 193, 194.

A, B, *fig.* 195, represent the above two blocks, each held between two small pillars *a* (the other pillar is hid behind the block), fixed in a strong plate D, and pressed against the pillars by a screw *b*, which acts on a clamp *d*. Over the blocks a pair of circular planes or cutters, E E, are situated, both being fixed on the same spindle, which is turned by a pulley in the middle of it. The spindle is fitted in a frame F F, moving in centres at *e e*, so as to rise and fall when moved by a handle *f*. This brings the cutters down upon the blocks; and the depth to which they can cut is regulated by a curved shape *g*, fixed by screws upon the plate D, between the blocks. Upon this rests a curved piece of metal *h*, fixed to the frame F, and inclosing, but not touching, the pulley. To admit the cutters to traverse the whole length of the blocks, the plate D (or rather a frame beneath it) is sustained between the points of two centres. Screws are seen at *l*, on these centres. The frame inclines when the handle L is depressed. At M is a lever, with a weight at the end of it, counterbalancing the weight of the blocks, and plate D, all which are above the centre on which they move. The frame F is also provided with a counterpoise to balance the cutters, &c. The cutters E E are circular wheels of brass, with round edges. Each has two notches in its circumference, at opposite sides; and in these notches chisels are fixed by screws, to project beyond the rim of the wheel, in the manner of a plane iron before its face.

This machine is used as follows: — In order to fix the block, it is pressed between the two pins (only one of which, at *a*, can be seen in this view), and the clamp *d*, screwed up against it, so as just to hold the block, but no more. The clamp has two claws, as is seen in the figure, each furnished with a ring entering the double prints previously made in the end of the block. These rings are partly cut away, leaving only such a segment of each as will just retain the block, and the metal between them is taken out to admit the cutter to operate between them, or nearly so. In putting the blocks into this machine, the workman applies the double prints to the ends of the claws of the clamps, but takes care that the blocks are higher between the pins *a* than they should be; he then takes the handle *f*, and by it presses the cutters E E (which we suppose are standing still) down upon the blocks, depressing them between their pins at the same time, till the descent of the cutters is stopped by the piece *h* resting on the shape *g*. He now turns the screws *b b*, to fix the blocks tight. The cutters being put in motion cut the scores, which will be plainly seen by the mode of adjustment just described, to be of no depth at the pin-hole; but by depressing the handle L, so as to incline the blocks, and keeping the cutters down upon their shape *g*, by the

Digitized by Google

handle *f*, they will cut any depth towards the ends of the blocks, which the shape *g* admits.

By this means one quarter of the score is formed; the other is done by turning both blocks together half round in this manner. The centres *l* are not fitted into the plate D itself, but into a frame seen at R beneath the plate, which is connected with it by a centre pin, exactly midway between the two blocks A B. A spring catch, the end of which is seen at *r*, confines them together; when this catch is pressed back, the plate D can be turned about upon its centre pin, so as to change the blocks, end for end, and bring the unscored quarters (*i. e.* over the clamps) beneath the cutters; the workman taking the handles *f* and L, one in each hand, and, pressing them down, cuts out the second quarter. This might have been effected by simply lifting up the handle L; but in that case the cutter would have struck against the grain of the wood so as to cut rather roughly; but by this ingenious device of reversing the blocks, it always cuts clean and smooth, in the direction of the grain. The third and fourth quarters of the score are cut by turning the other sides of the blocks upwards, and repeating the above operation. The shape *g* can be removed, and another put in its place, for different sizes and curves of blocks; but the pins *a* and holding clamps *d* will suit many different sizes.

By these machines the shells of the blocks are completely formed, and they are next polished and finished by hand labour; but as this is performed by tools and methods which are well known, it is needless to enter into any explanation: the finishing required being only a smoothing of the surfaces. The machines cut so perfectly true as to require no wood to be removed in the finishing; but as they cut without regard to the irregularity of the grain, knots, &c., it happens that many parts are not so smooth as might be wished, and for this purpose manual labour alone can be employed.

The lignum vitæ for the sheaves of the blocks is cut across the grain of the wood by two cross-cutting saws, a circular and straight saw, as before mentioned. These machines do not essentially differ in their principle from the great cross-cutting saws we have described, except that the wood revolves while cutting, so that a small saw will reach the centre of a large tree, and at the same time cut it truly flat. These machines cut off their plates from the end of a tree which are exactly the thickness for the intended sheave. These pieces are of an irregular figure, and must be rounded and centred in the crown saw.

9. *The crown saw* is represented in *fig.* 196, where A is a pulley revolving by means of an endless strap. It has the crown or trepan saw *a* fixed to it, by a screw cut within the piece, upon which the saw is fixed, and which gives the ring or hook of the saw sufficient stability to perform its office. Both the pulleys and saw revolve together upon a truly cylindrical tube *b*, which is stationary, being attached by a flanch *c* to a fixed puppet B, and on this tube as an axis the saw and pulley turn, and may be slid endwise by a collar fitted round the centre piece of the pulley, and having two iron rods (only one of which can be seen at *d* in the figure), passing through holes made through the flanch and puppet B. When the saw is drawn back upon its central tube, the end of the latter projects beyond the teeth of the saw. It is by means of this fixed ring or tube within the saw, that the piece of wood *e* is supported together during the operation of sawing, being pressed forcibly against it by a screw D, acting through a puppet fixed to the frame of the machine. At the end of this screw is a cup or basin which applies itself to the piece of wood, so as to form a kind of vice, one side being the end of the fixed tube, the other the cup the end of the screw D. Within the tube *b* is a collar for supporting a central axis, which is perfectly cylindrical. The other end of this axis (seen at *f*) turns in a collar of the fixed puppet E. The central axis has a pulley F, fixed on it, and giving it motion by a strap similar to the other. Close to the latter pulley, a collar *g* is fitted on the centre piece of the pulley, so as to slip round freely, but at the same time confined to move endwise with the pulley and its collar. This collar receives the ends of the two iron rods *d*. The opposite ends of these rods are, as above mentioned, connected by a similar collar, with the pulley A of the saw *a*. By this connection, both the centre bit, which is screwed into the end of the central axis *f*, and the saw

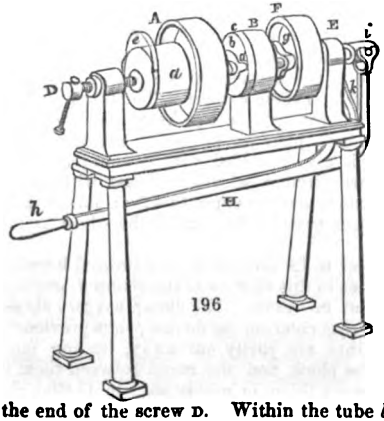

196

Digitized by Google

sliding upon the fixed tube *b*, are brought forward to the wood at the same time, both being in rapid motion by their respective pulleys.

10. *The coaking engine.*—This ingenious piece of machinery is used to cut the three semi-circular holes which surround the hole bored by the crown saw, so as to produce a cavity in the centre of the disc.

11. *Face-turning lathe.*—The sheave is fixed against a flat chuck, similar to that in the coaking engine, except that the centre pin instead of having a nut is tapped into the flat chuck, and turned by a screwdriver.

A complete set of this block machinery has since been made, by Messrs. Maudslay and Field, for the Spanish Government, from the original drawings and models.

Iron blocks and sheaves have been introduced with great advantage by Messrs. Brown and Lenox, and are used extensively in the naval and merchant services. See IRON.

BLOCK TIN. Metallic tin cast into a block, the weight of which is now about 3½ cwts. Formerly, when it was the custom to carry the blocks of tin on the backs of mules, the block was regulated by what was then considered to be a load for the mule, at 2½ cwts. Subsequently, the block of tin was increased in size, and made as much as two men could lift, or 3 cwts. It was the custom to order so many blocks of tin, and the smelter, being desirous of selling as much tin as possible, continued to increase the size of the block, so that, although 3½ cwts. is the usual weight, many blocks are sold weighing 3¾ cwts. See TIN.

BLOND METAL. A Clayband ironstone found at Wednesbury, is used when smelted, for making tools.

BLOOD. (*Sang*, Fr.; *Blut*, Germ.) The liquid which circulates in the arteries and veins of animals; bright red in the former and purple in the latter, among all the tribes whose temperature is considerably higher than that of the atmosphere. It consists — 1, of a colourless transparent solution of several substances in water; and, 2, of red undissolved particles diffused through that solution. Its specific gravity varies with the nature and health of the animal, being from 1·0527 to 1·0570 at 60° F. It has a saline sub-nauseous taste, and a smell peculiar to each animal. When fresh drawn from the vessels, it rapidly coagulates into a gelatinous mass, called the clot, cruor, or crassamentum, from which, after some time, a pale-yellow fluid, passing into yellowish-green, oozes forth, called the *serum*. If the warm blood be switched with a bundle of twigs as it flows from the veins, the fibrine concretes and forms long fibres and knots, while it retains its usual appearance in other respects. The clot contains fibrine and colouring matter in various proportions. Berzelius found, in 100 parts of the dried clot of blood, 35 parts of fibrine, 58 of colouring matter, 1·3 of carbonate of soda, 4 of an animal matter soluble in water, along with some salts and fat. The specific gravity of the serum varies from 1·027 to 1·029. It forms about three-fourths of the weight of the blood, has an alkaline reaction, coagulates at 157° F. into a gelatinous mass, and has for its leading constituent *albumen* to the amount of 8 per cent. besides fat, potash, soda, and salts of these bases. Blood does not seem to contain any gelatine. The coloured blood corpuscules contain an albuminous substance, the nature of which has not been very satisfactorily made out. Chemists have called the crystalline substance of the red corpuscules of the blood *Hæmato-crystallin*. According to Lehmann, they consist of carbon, 55·41; hydrogen, 7·08; nitrogen, 17·27; sulphur, 0·25; oxygen, 19·99.

Hæmatin is peculiar to the blood corpuscules of vertebrate animals—and a substance called *Hæmatoidin*, has been observed in the blood extravasated in the tissues of living animals. Fat and sugar are found in blood, the quantities varying with the health of the animal. For a very full account of the researches made by chemists on blood. — *Watts' Chemical Dictionary.*

The red colouring matter called *hematosine* may be obtained from the cruor by washing with cold water and filtering. Professor Stokes, in a paper "*On the Reduction and Oxidation of the Colouring Matter of the Blood*," has published some very curious results. By spectrum analysis he has been led to infer that the colouring matter of blood, like indigo, is capable of existing in two states of oxidation, distinguishable by a difference of colour and a fundamental difference in the action on the spectrum. It may be made to pass from the more to the less oxidised state, by the action of suitable reducing agents, and recovers its oxygen by absorption from the air. This colouring matter in its two states of oxidation, Professor Stokes proposes to call *scarlet cruorine* and *purple cruorine*.—*Proceedings of the Royal Society*, vol. xiii. p. 355 (1864).

Mr. Sorby has also published in the "*Quarterly Journal of Science*," No. VI., April 1865, a paper "*On the Detection of Blood Stains by Spectrum Analysis*," in which he shows how it may be employed with great reliance in cases of the highest judicial importance. These two papers should be consulted.

Digitized by Google

Blood may be dried by evaporation at a heat of 130° to 140°, and in this state has been transported to the colonies for purifying cane juice. It is used for making animal charcoal in the Prussian-blue works, and, by an after-process, a decolouring carbon. It is employed in some Turkey-red dye works. Blood is a powerful manure.

Mr. Pillans, in 1854, took out a patent for the separation of the colouring matter of the blood, by which he obtained readily—1st, the clot, in a comparatively dry state, comprising hematosine, with a portion of serum and all the fibrine; 2nd, a portion of serum, highly coloured with hematosine; 3rd, the clear serum.

The blood, in small fragments, is dried on wirework or trays, at a less temperature than will coagulate the hematosine, so that, when dry, it may be soluble in water; 110° to 115° is the temperature recommended.

The clear serum is dried and ground and in a fit state to be used as albumen, and may be employed by the printers of textile fabrics for fixing ultramarine blue and other colours, or as a substitute for egg albumen, both in printing colours and in refining liquids.

BLOODSTONE. A very hard, compact variety of hæmatite iron ore, which, when reduced to a suitable form, fixed into a handle, and well polished, forms the best description of burnisher for producing a high lustre on gilt coat-buttons. The gold on china is burnished by the same means.—*Knight.*

Bloodstone is a name also applied to the jaspery variety of quartz known as the *heliotrope*, coloured deep-green, with interspersed blood-red spots like drops of blood. —*Dana.*

BLOOM. The name given to a mass of iron after it leaves the pudding furnace. See IRON.

BLOOMARY. The old iron furnaces were so called.

BLOWING MACHINE and FANS. See IRON, METALLURGY, VENTILATION.

BLOWPIPE. (*Chalumeau*, Fr.; *Löthrohr*, Germ.) Jewellers, mineralogists, chemists, enamellers, &c., make frequent use of a tube,—usually bent near the end,—terminated with a finely pointed nozzle, for blowing through the flame of a lamp, candle, or gas jet, and producing thereby a small conical flame possessing a very intense heat.

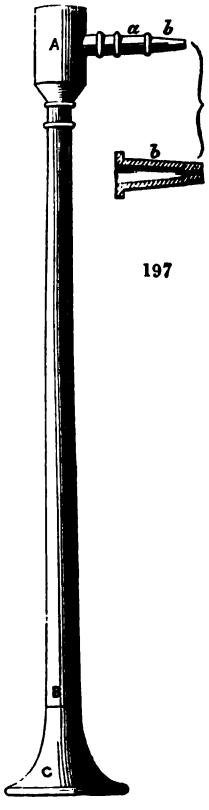

197

The blowpipe is so extremely useful to the manufacturer and to the miner that a more exact description of the instrument is required.

When we propel a flame by means of a current of air blown *into* or upon it, the flame thus produced may be divided into two parts, as possessing different properties—that of *reducing* under one condition and of *oxidising* under another.

The *reducing flame* is produced by blowing the ordinary flame of a lamp or candle simply aside by a weak current of air impinging on its outer surface; it is therefore unchanged except in its direction. Unconsumed carbon, at a white heat, giving the yellow colour to the flame, coming in contact with the substance aids in its reduction.

The *oxidising flame* is formed by pouring a strong blast of air into the *interior* of the flame; combustion is thus thoroughly established, and if a small fragment of an oxidisable body is held just beyond the point of the flame, it becomes intensely heated, and, being exposed freely to the action of the surrounding air, it is rapidly oxidised.

The best form of blowpipe is the annexed (*fig.* 197), which, with the description, is copied from Blandford's excellent translation of Dr. Theodore Scheerer's "Introduction to the Use of the Mouth Blowpipe."

The tube and nozzle of the instrument are usually made of German silver, or silver with a platinum point, and a trumpet-shaped mouth-piece of horn or ivory. Many blowpipes have no mouth-pieces of this form, but are simply tipped with ivory, or some similar material. The air-chamber A serves in some degree to regulate the blast and receives the stem, B, and the nozzle, *a*, which are made separately, and accurately ground into it, so that they may be put together or taken apart at pleasure. The point *b* is best made of platinum, to allow of its being readily cleaned, and is of the form shown in the woodcut. When the instrument is used, the mouth-

Digitized by Google

piece is pressed against the lips, or, if this is wanting, the end of the stem must be held between the lips of the operator. The former mode is far less wearying than the latter; and whereas, with the trumpet mouth-piece, it is easy to maintain a continued blast for five or ten minutes, without it it is almost impossible to sustain an unbroken blast of more than two or three minutes' duration. While blowing, the operator breathes through his nostrils only, and, using the epiglottis as a valve, forces the air through the blowpipe by means of the cheek muscles.

Some years since, Mr. John Prideaux, of Plymouth, printed some valuable "Suggestions" for the use of the blowpipe by working miners. Some portions of this paper appear so useful, especially under circumstances which may preclude the use of superior instruments, &c., that it is thought advisable to transfer them to these pages.

For ordinary metallurgic assays, the common blowpipe does very well. A mere tapering tube, 10 inches long, ¼ inch diameter at one end, and the opening at the other scarcely equal to admit a pin of the smallest kind, the smaller end curved off for 1½ inch to a right angle. A bulb at the bend, to contain the vapour condensed from the breath, is useful in long operations, but may generally be dispensed with. In selecting the blowpipe, the small aperture should be chosen perfectly round and smooth, otherwise it will not command a good flame.

A common candle, such as the miner employs under ground, answers very well for the flame.

To support the subject of assay, or "the assay," as it has been happily denominated by Mr. Children, two different materials are requisite, according as we wish to calcine or reduce it. For the latter purpose, nothing is so good as charcoal; but that from oak is less eligible, both from its inferior combustibility and from its containing iron, than that from alder, willow, or other light woods.

For calcination, a very convenient support, where platinum wire is difficult to procure, is white-baked pipeclay or china clay, selecting such as will not fuse nor become coloured by roasting with borax.

These supports are conveniently formed by a process of Mr. Tennant. The clay is to be beaten to a smooth stiff body; then a thin cake of it, being placed between a fold of writing paper, it is to be beaten out with a mallet to the thickness of a wafer, and cut, paper and all, into squares of ⅜ths inch diameter, or triangles about the same size. These are to be put in the bowl of a tobacco-pipe, and heated gently till dry, then baked till the paper is burnt away, and the clay left perfectly white. They should be baked in a clear fire, to keep out coal dust and smoke as much as possible, as either of these adhering to the clay plates would colour the borax in roasting. A small fragment of the bowl of a new tobacco-pipe will serve instead in the absence of a more convenient material.

A simple pair of forceps (*fig.* 198). to move and to take up the hot assay, may be made of a slip of stiff tinplate, 8 inches long, ½ inch wide in the middle, and $\frac{1}{16}$th inch at the ends. The tin being rubbed off the points on a rough whetstone, the slip is to be bent until they approach each other within ¼ an inch and the two sides are parallel; thus there will be spring enough in the forceps to open and let go the assay when not compressed upon it by the finger and thumb.

198

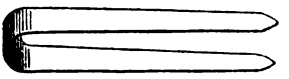

A magnetic needle, very desirable to ascertain the presence of iron, is easily made of the requisite delicacy where a magnet is accessible. A bit of thin steel wire, or a long fine stocking-needle, having ¼ inch cut off at the point, is to be heated in the middle that it may be slightly bent there (*fig* 199). While hot, a bit of sealing wax is to be attached to the centre, and the point which had been cut off, being heated at the thick end, is to be fixed in the sealing wax, so that the sharp end may serve as a pivot, descending about ⅛th inch below the centre, taking care that the ends of the needle fall enough below the pivot, to prevent it overturning. It must be magnetised, by sliding one end of a magnet half a dozen or more times from the centre to one end of the needle, and the other end a similar number of times from the centre of the needle to its other end. A small brass thimble (not capped with iron) will do for for the support, the point of the pivot being placed in one of the indentations near the centre of the tap, when, if well balanced, it will turn until it settles north and south. If one side preponderate, it must be nipped until the balance be restored.

199

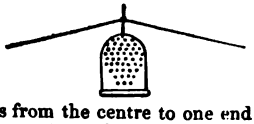

A black gun-flint is also occasionally used to rub the metallic globules (first attached, whilst warm, to a bit of sealing wax), and ascertain the colour of the streak which they give. Thus minute particles of gold, copper, silver, &c., are readily discriminated. A little refined borax and carbonate of soda, both in powder, will complete the requisites.

Digitized by Google

Having collected these materials, the next object for the operator is to acquire the faculty of keeping up an unintermitted blast through the pipe whilst breathing freely through the nose.

A very sensitive and, for most purposes, sufficiently delicate balance (*fig.* 200) was also devised by Mr. Prideaux, of which the following is a description:—

200

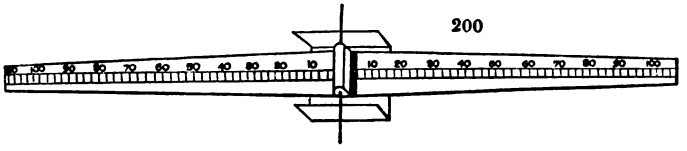

The common marsh reed, growing generally in damp places throughout the kingdom, will yield straight joints, from 8 to 12, or more, inches long; an 8-inch joint will serve, but the longer the better. This joint is to be split down its whole length, so as to form a trough, say ¼ inch wide in the middle, narrowed away to ⅓rd inch at the ends. A narrow slip of writing paper, the thinner the better (bank post is very convenient for the purpose), and as long as the reed trough, is to be stuck with common paste on the face of a carpenter's rule, or, in preference, that of an exciseman,—as the inches are divided into tenths instead of eighths;—in either case observing that the divisions of the inch on the rule be left uncovered by the paper. When it is dry, lines must be drawn the whole length of it, ⅛th inch apart, to mark out a stripe ⅛th inch wide. Upon this stripe the divisions of the inch are to be ruled off by means of a small square.

The centre division being marked 0, it is to be numbered at every fourth line to the ends. Thus the fourth from the centre on each side will be 10; the eighth, 20; the twelfth, 30; the sixteenth, 40, &c.; and a slip of 10 inches long, graduated into tenths of an inch, will have on each arm 50 lines, or 125 degrees, divided by these lines into quarters. While the lines and numbers are drying, *the exact centre* of the reed-trough may be ascertained, and marked *right* across, by spots on the two edges. A line of gum water, full ⅛th inch wide, is then laid with a camel-hair pencil along the hollow, and the paper being stripped from the rule (which it leaves easily), the graduated stripe is cut out with scissors, and laid in the trough, with the line 0 exactly in the centre. Being pressed to the gummed reed, by passing the round end of a quill along it, it graduates the trough from the centre to each end. This graduation is very true, if well managed, as the paper does not stretch with the gum water after being laid on the rule with the paste.

A very fine needle is next to be procured (those called *bead*-needles are the finest) and passed through a slip of cork the width of the centre of the trough, about ⅛th inch square, ⅛th thick. It should be passed through with care, so as to be quite straight. The cork should then be cut until one end of it fits into the trough, so that the needle shall bear on the edges exactly in the spots that mark the centre, as it is of importance that the needle and the trough be exactly at right angles with each other. The cork is now to be fixed in its place with gum water, and, when fast dry, to be soldered down on each side with a small portion of any soft resinous cement, on the point of a wire or knitting needle; a little cement being also applied in the same manner to the edges of the cork where the needle goes through, to give it firmness, the beam is finished. It may be balanced by paring the edges on the heaviest side: but accurate adjustment is needless, as it is subject to vary with the dampness or the dryness of the air.

The support on which it plays is a bit of tin plate (or, in preference, brass plate), 1⅛ths inch long, and 1 inch wide. The two ends are turned up square ⅛ths of an inch, giving a base of ⅛ths of an inch wide, and two upright sides ⅛ths high. The upper edges are then rubbed down smooth and square upon a Turkey stone, letting both edges bear on the stone together that they may exactly correspond. For use, the beam is placed evenly in the support, with the needle resting across the edges. Being brought to an exact balance by a bit of writing paper, or any other substance, placed on the lighter side, and moved toward the end until the equilibrium is produced, it will turn with extreme delicacy, a bit of horsehair, ⅛th inch long being sufficient to bring it down freely.

It must not be supposed that any such instrument as this is recommended as in any way substituting the beautiful balances which are constructed for the chemist, and others requiring to weigh with great accuracy. The object is merely to show the miner a method by which he may construct for himself a balance which shall be sufficiently accurate for such blowpipe investigations as it may be important for him to learn to perform for himself. If the suggestions of the chemist who devised the above balance had been carried out, much valuable mineral matter which has been lost might have been turned to profitable account.

Digitized by Google

The blowpipe is largely used in manufactures, as in soldering, in hardening and tempering small tools, in glass-blowing, and in enamelling. In many cases the blowpipes are used in the mouth, but frequently they are supplied with air from a bellows moved by the foot, by vessels in which air is condensed, or by means of pneumatic apparatus.

Many blowpipes have been invented for the employment of oxygen and hydrogen, by the combustion of which the most intense heat which we can produce is obtained. Professor Hare, of Philadelphia, was the first to employ this kind of blowpipe, when he was speedily followed by Clark, Gurney, Leeson, and others. The blowpipe, fed with hydrogen, is employed in many soldering processes with much advantage.

The general form of the "workshop blowpipe" is that of a tube open at one end, and supported on trunnions in a wooden pedestal, so that it may be pointed vertically, horizontally, or at any angle as desired. Common street gas is supplied through one hollow trunnion, and it escapes through an annular opening, while common air is admitted through the other trunnion, which is also hollow, and is discharged in the centre of the hydrogen through a central conical tube; the magnitude and intensity of the flame being determined by the relative quantities of gas and air, and by the greater or less protrusion of the inner cone, by which the annular space for the hydrogen is contracted in any required degree. See AUTOGENOUS SOLDERING.

BLUBBER. The cellular membrane of the whale, containing the oil. See OIL.

BLUE COPPERAS, or BLUE STONE. The commercial or common names of the sulphate of copper. See COPPER.

BLUE JOHN. A beautiful variety of fluor spar, found at Tray Cliff, near Castleton, Derbyshire, from which vases and other ornamental articles are wrought. See FLUOR SPAR.

BLUE LEAD. A name used sometimes by the miners to distinguish galena from carbonate, or white lead. A variety of galena, to which this name has been applied, and which is pseudomorphous after pyromorphite, has been found at Herodsfoot mine, and Huel Hope in Cornwall, and at some mines in Saxony and France. The specimens from Huel Hope would burn in the flame of a candle like the supersulphide of lead.

BLUE PIGMENTS. The blues of vegetable origin, in common use, are indigo and litmus. The blue pigments of a metallic nature found in commerce are the following:— *Prussian blue*; sesqui-ferrocyanide of iron, called also *Berlin blue*; *mountain blue*, a carbonate of copper mixed with more or less earthy matter; *Bremen blue*, or *verditer*, a greenish-blue colour obtained from copper mixed with chalk or lime; *iron blue*, phosphate of iron, but little employed; *cobalt blue*, a colour obtained by calcining a salt of cobalt with alumina or oxide of tin; *smalt*, a glass coloured with cobalt and ground.

Molybdenum blue is a combination of this metal and oxide of tin, or phosphate of lime. A blue may also be obtained by putting into molybdic acid (made by digesting sulphuret of molybdenum with nitric acid), some filings of tin, and a little muriatic acid. The tin deoxidises the molybdic acid to a certain degree, and converts it into the molybdous, which, when evaporated and heated with alumina recently precipitated, forms this blue pigment.

Ultramarine is a beautiful blue pigment.

Turnbull's and *Chinese blues* are both double cyanides of iron.

King's blue.—A carbonate of cobalt.

Saxon blue.—A solution of indigo in sulphuric acid. See these COLOURS.

BLUE VITRIOL. Sulphate of copper. When found in nature, it is due entirely to the decomposition of the sulphides of copper, especially of the yellow copper pyrites, which are liable to this change when placed under the influence of moist air, or of water containing air. See COPPER.

BOGHEAD COAL, *and other Brown Scotch Cannel Coals.* The brown cannels are chiefly confined to Scotland, and have been wrought, with the exception of the celebrated Boghead, for the last thirty years. They are found at Boghead, near Bathgate; Rocksoles, near Airdrie; Pirnie, or Methill; Capeldrea, Kirkness, and Wemyss, in Fife. The first named coal, about which there has been so much dispute as to its nature, has only been in the market eight years. It is considered the most valuable coal hitherto discovered for gas- and oil-making purposes; but, strange to say, the middle portion of the Pirnie, or Methill, seam, which has been unnoticed for thirty years, is nearly as valuable for both purposes.

BOGHEAD. Amorphous; fracture subconchoidal, compact, containing impressions of the stems of *Sigillaria*, and its roots (*Stigmariæ*), with rootlets traversing the mass. Colour, clove-brown, streak yellow, without lustre; a non-electric; takes fire easily, splits, but does not fuse, and burns with an empyreumatic odour, giving out much smoke, and leaving a considerable amount of white ash. H 25. Specific gravity, 1·200.

Digitized by Google

According to Dr. Stenhouse, F.R.S., its composition is:—

Carbon	65·72
Hydrogen	9·03
Nitrogen	0·72
Oxygen	4·78
Ash	19·75
	100·00

Dr. Stenhouse's analysis of the ash of Boghead coal, from three analyses, was as follows:—

Silica	58·31
Alumina	33·65
Sesquioxide of iron	7·00
Potash	0·84
Soda	0·41
Lime and sulphuric acid	traces.

Dr. Andrew Fyfe, F.R.S.E., on analysis, found that the coal yielded, from a picked specimen, 70 per cent. of volatile matter, and 30 per cent. of coke and ash. From a ton he obtained 14·880 cubic feet of gas, the illuminating power of which was determined by the use of the Bunsen photometer, the gas being consumed by argands burning from 2½ to 3¼ feet per hour, according to circumstances. The candle referred to was a spermaceti candle, burning 140 grains per hour.

Cubic Feet of Gas per Ton of Coal.	Specific Gravity.	Condensation by Chlorine in 100 Parts.	Durability 1 foot burns.	Illuminating Power 1 foot = Light of Candles.	Pounds of Coke per Ton of Coal.
14·880	·802	27	Min. Sec. 88 25	7·72	760

The Pirnie or Methill brown cannel, on analysis, gives the following results:—

Specific gravity	1·126
Gas per ton	13,500 feet
Illuminating power	28 candles
Coke and ash	36 per cent.
Hydro-carbons condensed by bromine	20 ,,
Sulphuretted hydrogen	½ ,,
Carbonic acid	4½ ,,
Carbonic oxide	7¾ ,,
Volatile matter in coal	65 ,,
Specific gravity of gas	·700

The Boghead coal occurs in the higher part of the Scotch coal field; in about the position of the "slaty band" of ironstone, its range is not more than 3 or 4 miles in the lands of Torbane, Inchcross, Boghead, Capper's, and Bathvale, near Bathgate, in the county of Linlithgow. In thickness it varies from 1 to 30 inches, and at the present consumption, say from 80,000 to 100,000 tons per annum, it cannot last many years.

The following section of a pit at Torbane shows that the cannel occurs in ordinary coal measures, and under circumstances common to beds of coal:—

	Ft.	In.
Boghead house coal	2	7
Arenaceous shale	6	0
Slaty sandstone	0	7
Shale and ironstone, containing remains of plants and shells	0	10
Cement stone (impure ironstone)	0	4
Boghead cannel	1	9
Fire clay, full of *Stigmariæ*	0	5
Coal (common)	0	6
Black shale	0	0¾
Coal	0	1
Shale	0	0⅜
Coal	0	0½
Fire clay	0	1½
Hard shale	0	3
Thin laminæ of coal and shale	0	3½
Common coal	0	6
Fire clay	0	0

Digitized by Google

One of the chief characters of this cannel is its indestructibility under atmospheric agencies; for whether it is taken from the mine at a depth of fifty fathoms, or at the outcrop, its gas- and oil-yielding properties are the same. Even a piece of the mineral taken out of the drift deposits, where it had most probably lain for thousands of years, appears to be just the same in quality as if it had been but lately raised from the mine.

In the earth the seam lies parallel to its roof and floor, like other beds of coal; and it is traversed by the usual vertical joints, dividing it into the irregular cubes which so generally characterise beds of cannel. The roof lying above the cement stone contains remains of *Calamites;* and the ironstone nodules, fossil shells of the genus *Unio.* The floor of the mine contains *Stigmariæ;* and the coal itself affords more upright stems of *Sigillariæ*, and its roots (*Stigmariæ*) and their radicles, running through the seam to a considerable distance, than the majority of coals show. In these respects it entirely resembles the Pirnie or Methill seam. Most cannels afford remains of fish; but in Boghead no traces of these fossils have yet been met with, although they have been diligently sought after.

The roots in the floors, and the upright stems of trees in the seam itself, appear to show that the vegetable matter now forming the coal grew on the spot where it is found. If the mangroves and other aquatic plants, at the present day found growing in the black vegetable mud of the marine swamps of Brass town, on the west coast of Africa, were quietly submerged and covered up with clay and silt, we should have a good illustration of the formation of a bed of carbonaceous matter showing no structure, mingled with stems and roots of trees showing structure, which is the case of Boghead coal, the structure being only detected in those parts showing evidence of stems and roots, and not in the matrix in which those fossils are contained.

The chemical changes by which vegetable matter has been converted into Boghead cannel will not be here dwelt on; but the chief peculiarity about the seam is its close and compact roof, composed of cement-stone, and shale. This is perfectly water and air tight, so much so that, although the mine is troubled with a great quantity of water, it all comes through the floor, and not the roof. This tight covering of the coal has doubtless exercised considerable influence on the decomposing vegetable matter after the latter had been submerged. It is worthy of remark that, above the Pirnie or Methill seam,—the coal nearest approaching Boghead,—a similar bed of impure ironstone occurs.

Away from whin dykes which traverse the coal field, there are no appearances of the action of an elevated temperature, either upon the coal or its adjoining strata, to give any sanction to the hypothesis, that the cannel has resulted from the partial decomposition of a substratum of coal by the heat of underlying trap, the volatile matters having been retained in what has probably been a bed of shale. First, it must be understood that Boghead cannel, even when treated with boiling naphtha, affords scarcely a trace of bitumen; and, secondly, when the seam of coal is examined in the neighbourhood of a whin dyke, where heat has evidently acted on it, it is found nothing like cannel, but as a soft sticky substance, of a brown colour, resembling burnt Indian-rubber. Besides these facts, the seams of coal and their accompanying strata, both above and below the cannel, show no signs of the action of heat, but, on the contrary, exhibit every appearance of having been deposited in the usual way, and of remaining without undergoing any particular alteration.—E. W. B. See CANNEL COAL.

BOG. (Celtic, *soft.*) See PEAT.

BOG BUTTER. A fatty spermaceti-like substance found in the peat mosses. See ADIPOCERE.

BOGHEAD NAPHTHA (*syn.* Bathgate naphtha), naphtha from the Boghead coal. See NAPHTHA, BOGHEAD.

BOG IRON ORE is an example of the recent formation of an ore of iron, arising from the decomposition of rocks containing iron, by the action of water charged with carbonic acid. The production of this ore of iron in the present epoch, explains to us many of the conditions under which some of the more ancient beds of iron ore have been produced.

Bog-iron ore is common in the peat bogs of Ireland and other places. See IRON ORES and IRON.

BOG MANGANESE. *Wad*, or earthy manganese. See MANGANESE.

BOG WOOD. The trunks and larger branches of trees dug up from peat bogs. The black oak of the bogs of Ireland, which is so largely employed in the manufacture of ornaments, is so called.

BOHEA. A kind of black tea. See TEA.

BOHEMIAN BOLE. A yellow variety of bole.

Digitized by Google

BOILED OIL. Linseed oil boiled with litharge, which removes some of oleaginous parts, and renders the oil more "drying," that is, it solidifies more readily.

BOILER. See STEAM BOILER.

BOILER PLATE. Sheets of iron used for making boilers, and now largely employed for constructing railway bridges, ships, tanks, &c. The average resistance of boiler plates is reckoned at 20 tons to the square inch, and the weight which they can carry safely is about 5 tons on the square inch. Rivetting is calculated to reduce the strength to a degree corresponding to that of the area which the rivets occupy. Such are the principles by which the Railway Department of the Board of Trade are guided. See IRON.

BOIS DURCI. Finely powdered sawdust, and turnings of hard wood, such as rosewood, ebony, mahogany, and the like, are made into a paste with blood, which is pressed into moulds or formed by dies. It receives a beautiful polish, equal to jet, which it much resembles. This was first introduced to England in 1862 by M. Latry, senior.

BOLE. A kind of clay, often highly coloured by iron. It usually consists of silica, alumina, iron, lime, and magnesia. It is not a well-defined mineral, and, consequently, many substances are described by mineralogists as bole. *Armenian bole* is of a bright red colour. This is frequently employed as a dentifrice, and in some cases it is administered medicinally. *Bole of Blois* is yellow, contains carbonate of lime, and effervesces with acids. *Bohemian bole* is a yellowish red. *French bole* is of a pale red, with frequent streaks of yellow. *Lemnian bole* and *Silesian bole* are, in most respects, similar to the above-named varieties. The following analyses are by C. Von Hauer. Capo di Bove—Silica, 45·64; alumina, 29·33; peroxide of iron, 8·88; lime, 0·60; magnesia, a trace; water, 14·27 = 98·72. New Holland—Silica, 38·22; alumina, 31·00; peroxide of iron, 11·00; lime, a trace; magnesia, a trace-water, 18·81 = 99·03.

BOLETUS. A genus of mushroom. See AMADOU.

BOLOGNIAN STONE. A sulphate of barytes, found in roundish masses, which phosphoresces when, after calcination, it is exposed to the solar rays.

BOMBASINE. A worsted stuff mixed with silk; it is a twilled fabric of which the warp is silk and the weft worsted.

BOMBYX MORI. The moth to which the silkworm turns. The caterpillar (silkworm) is at first of a dark colour; but gradually, as with all other caterpillars, it becomes lighter coloured. This worm is about eight weeks in arriving at maturity, during which time it frequently changes its colour. When full grown, the silkworm commences spinning its web in some convenient place. The silkworm continues drawing its thread from various points, and attaching it to others; it follows, therefore, that after a time the body becomes, in a great measure, enclosed in the thread. The work is then continued from one thread to another, the silkworm moving its head and spinning in a zigzag way, bending the fore part of the body back to spin in all directions within reach, and shifting the body only to cover with silk the part which was beneath it. As the silkworm spins its web by thus bending the fore part of the body back, and moves the hinder part of the body in such a way only as to enable it to reach the farther back with the fore part, it follows that it encloses itself in a cocoon much shorter than its own body; for soon after the beginning, the whole is continued with the body in a bent position. During the time of spinning the cocoon, the silkworm decreases in length very considerably; and after it is completed it is not half its original length; at this time it becomes quite torpid, soon changes its skin, and appears in the form of a chrysalis. The time required to complete the cocoon is five days. In the chrysalis state the animal remains from a fortnight to three weeks; it then bursts its case, and comes forth in the *imago state*, the moth having previously dissolved a portion of the cocoon by means of a fluid which it ejects.

The late Colonel Sir William Reid reports as follows on the *Bombyx Cynthia*:—

"I made several reports on the *Bombyx Cynthia* silkworm, which feeds on the castor-oil plant, for the information of the Society of Arts. It had been introduced into Malta from India, in that year, and appeared both hardy and wonderfully prolific; yet it failed in Malta in 1855.

"2. I had, however, previously distributed a great number of eggs, by sending them to Italy, France, and Algeria; and I contrived to watch the accounts of the trials made in those countries. I found that it had spread there, and had been carried to Spain and Portugal, and was creating considerable interest wherever it had been tried.

"3. I was, therefore, induced to re-introduce it into Malta. At the end of July last, I received a few eggs by post, in a quill, from Paris; and these have multiplied

Digitized by Google

in an extraordinary manner, so that I have not attempted to have them counted. The temperature of the winter season, now December, seems, however, to be affecting them, even in Malta, inasmuch as they grow more slowly than they did in the summer; but, nevertheless, they appear healthy.

"4. A very interesting paper, on the progress making in different countries in rearing the *Bombyx Cynthia*, will be found in the last number of the papers of the French Société d'Acclimation. This paper is by the able President of that society, M. Geoffroy Saint Hilaire.

"5. I had, in 1854, successfully sent the insect to the West Indies. The French Society have sent it to Brazil, to the Southern United States, and into Egypt. It is being introduced into Germany, and we are now sending more eggs and worms from Malta to Sicily.

"6. Experiments are making in France on spinning the silk, which is found to be very fine, very strong, and to take dyes well. In France the cocoons are corded, and afterwards spun, as in Malta. It is said that the chrysalis, on extricating itself from the cocoon and becoming a moth, does not, as was supposed, cut the thread; and the French have partially succeeded in unwinding the cocoons.

"7. The great interest I find taken in other countries in the attempts making to naturalise the *Bombyx Cynthia*, has induced me to report to you its re-introduction into Malta, with the view of begging you to make this known to the Society of Arts. I inclose an extract from my despatch, dated 7th of July, 1855, which explains the manner in which I successfully sent the insect to the West Indies; and in the same manner it may be easily conveyed from any one country to another. It may be found difficult to preserve the silkworm throughout the winter season, as well as difficult to grow the *Ricinus*, its proper food, in the climate of Europe. The proper climate for the *Bombyx Cynthia* is within, or on the borders of, the tropics. But the attempts now making ought not to be the less encouraged on that account, for they are producing a new raw material for thread and clothing within reach of men of skill and science; and 127,000 cocoons have recently been sent from Algeria to be manufactured in Alsace.

"8. The extraordinary manner in which the *Bombyx Cynthia* multiply, together with the abundance of food for them produced without culture in warm climates, renders the study of the habits of this insect, and the nature of its cocoons, of considerable importance.

"9. I send herewith a small sample of the cloth made from the worms reared in Malta.

"I have the honour to be, Sir,
"Your most obedient humble servant,
"WILLIAM REID, Governor."

Additional information on the *Bombyx Cynthia*, or Eria Silkworm, will be found in the "Society of Arts Journal" of June 4th, 1858.

Mr. Wells, writing from Grenada, in the West Indies, says, of these silkworms forwarded to him by Sir William Reid:—"I have the eighth generation of worms now hatching, having had seven crops of cocoons within the year. These worms multiply one hundredfold in each generation; and there is no doubt of their being easily fed to any amount." They are fed on the castor-oil plant, *Ricinus communis*, which grows rapidly, can be cultivated without much expense, and yields a good return in its very abundant seeds. See SILK.

BON-BONS. Comfits and other sweetmeats of various descriptions pass under this name. A large quantity is regularly imported from France into this country, and, from its usually superior quality, it is much in request. The manufacture of sweetmeats, confectionary, &c., does not enter so far into the plan of this work as to warrant our giving any special detail of the various processes employed; a general notice will however be found under the head of CONFECTIONARY.

Liqueur Bon-bons are made in the following manner. A syrup evaporated to the proper consistence is made, and some alcoholic liqueur is added to it. Plaster of Paris models of the required form are made; and these are employed, several being fastened to a rod, for the purpose of making moulds in powdered starch, filling shallow trays. The syrup is then, by means of a funnel, poured into these moulds, and there being a powerful repulsion between the starch and the alcoholic syrup, the upper portion of the fluid assumes a spherical form; then some starch is sifted over the surface, and the mould is placed in a warm closet. Crystallisation commences on the outside of the bon-bon, forming a crust inclosing the syrup, which constantly gives up sugar to the crystallising crust until it becomes sufficiently firm to admit of being removed. A man and two boys will make three hundredweights of bon-bons in a day.

Crystallised Bon-bons are prepared by putting them with a strong syrup contained

Digitized by Google

in shallow dishes, placed on shelves in the drying chamber, pieces of linen being stretched over the surface, to prevent the formation of a crust upon the surface of the fluid. In two or three days the bon-bons are covered with crystals of sugar; the syrup is then drained off, and the comfits dried.

Painted Bon-bons.—Bon-bons are painted by being first covered with a layer of glazing; they are then painted in body colours, mixed with mucilage and sugar.

The French have some excellent regulations, carried out under the "Préfet de Police," as to the colours which may be employed in confectionary. These are to the following effect:—

"Considering that the colouring matter given to sweets, bon-bons, liqueurs, lozenges, &c., is generally imparted by mineral substances of a poisonous nature, which imprudence has been the cause of serious accidents; and, that the same character of accidents have been produced by chewing or sucking the wrapping paper of such sweets, it being glazed and coloured with substances which are poisonous; it is expressly forbidden to make use of any mineral substance for colouring liqueurs, bon-bons, sugar-plums, lozenges, or any kind of sweetmeats or pastry. No other colouring matter than such as is of a vegetable character shall be employed for such a purpose. It is forbidden to wrap sweetmeats in paper glazed or coloured with mineral substances. It is ordered that all confectioners, grocers, dealers in liqueurs, bon-bons, sweetmeats, lozenges, &c., shall have their name, address, and trade printed upon the paper in which the above articles shall be enclosed. All manufacturers and dealers are personally responsible for the accidents which shall be traced to the liqueurs, bon-bons, and other sweetmeats manufactured or sold by them."

If similar provisions were in force in this country, it would prevent the use, to an alarming extent, in our cheap confectionary, of such poisonous substances as

Arsenite of copper,	Sulphide of arsenic,
Acetate of copper,	Oxide of lead,
Chromate of lead,	Sulphide of mercury, &c.

The colouring matters allowed to be used in France are indigo, Prussian blue, saffron, Turkey yellow, quercitron, cochineal, Brazil wood, madder, &c.

BONES. (*Os*, Fr.; *Knochen*, Gr.) They form the framework of animal bodies, commonly called the skeleton, upon which the soft parts are suspended, or in which they are enclosed. Bones are invested with a membrane styled the periosteum, which is composed of a dense tissue affording glue; whence it is convertible into jelly, by ebullition with water. Bones are not equally compact throughout their whole substance: the long ones have tubes in their centres, lined with a kind of periosteum of more importance to the life of the bones than even their external coat; the flat, as well as the short and thick, bones exhibit upon their surface an osseous mass of a dense nature, while their interior presents a cavity divided into small cellules by their bony partitions.

In reference to the composition of bones. we have to consider two principal constituents; the living portion or the osseous cartilage, and the inorganic or the earthy salts of the bones.

The osseous cartilage is obtained by suspending bones in a large vessel full of dilute muriatic acid, and leaving it in a cool place at about 50° F. The acid dissolves the earthy salts of the bones without perceptibly attacking the cartilage, which, at the end of a short time, becomes soft and translucid, retaining the shape of the bones; whenever the acid is saturated before it has dissolved all the earthy salts. it should be renewed. The cartilage is to be next suspended in cold water, which is to be frequently changed till it has removed all the acidity. By drying, the cartilage shrinks a little, and assumes a darker hue, but without losing its translucency. It becomes, at the same time, hard and susceptible of breaking when bent, but it possesses great strength.

This cartilage is composed entirely of a tissue passing into gelatine. By boiling with water, it is very readily convertible in a glue, which passes clear and colourless through the filter, leaving only a small portion of fibrous matter insoluble by further boiling. This matter is produced by the vessels which penetrate the cartilage, and carry nourishment to the bone. We may observe all these phenomena in a very instructive manner, by macerating a bone in dilute muriatic acid, till it has lost about the half of its salts; then washing it with cold water, next pouring boiling water upon it, leaving the whole in repose for 24 hours, at a temperature a few degrees below 212° F.

The cartilage, which has been stripped of its earthy salts, dissolves, but the small vessels which issue from the undecomposed portion of the bone remain under the form of white plumes, if the water has received no movement capable of crushing or breaking them. We may then easily recognise them with a lens, but the slightest touch tears them. and makes them fall to the bottom of the vessel in the form of a precipitate; if we digest bones with strong hot muriatic acid, so as to accelerate their decomposition, a

Digitized by Google

portion of the cartilage dissolves in the acid with a manifest disengagement of carbonic acid gas, which breaks the interior mass, and causes the half-softened bone to begin to split into fibrous plates, separable in the direction of their length. According to Marx, these plates, when sufficiently thin, possess, like scales of mica, the property of polarising light, a phenomenon which becomes more beautiful still when we soak them with the essential oil of the bark of the Laurus Cassia. The osseous cartilage is formed before the earthy part. The long bones are then solid, and they become hollow only in proportion as the earthy salts appear. In the new-born infant, a large portion of the bones is but partially filled with these salts; their deposition in the cartilage takes place round certain invariable *points of ossification*, and begins at a certain period after conception, so that we may calculate the age of the fœtus according to the progress which ossification has made.

Composition of Bones.

	Heintz.			Berzelius.
	Ox. Femur.	Sheep.	Man. Forearm.	Human Tooth.
Animal matter - - - - -	30·58	26·54	31·11	28·00
Phosphate of lime - - - - -	57·67	61·99	59·14	64·30
Fluoride of calcium - - - -	2·69	2·97	2·23	
Carbonate of lime - - - - -	6·99	6·92	6·32	5·30
Phosphate of magnesia - - - -	2·07	1·58	1·20	1·40

Heintz found that the fixed bases in the bones were sufficient to saturate completely the acids contained in them, so that the phosphate of lime, as well as the phosphate of magnesia, which the bones contain, is composed according to the formula $3RO,PO^5$. Bone phosphate of lime was considered by Berzelius to be $8CaO,3PO^5$. True bony structure is perfectly free from chlorides, from sulphates, and from iron, these salts being only found when the liquid pervading the bones has not been completely removed. The bones in youth contain less earthy constituents than those of adults; and, in advanced age, the proportion of mineral matters increases. Von Biria found more bone earth in the bones of *birds* than in those of mammals; he found also the ratio of the carbonate of lime to the phosphate to be generally greater. In the bones of *amphibia*, he found less inorganic matter than in those of mammals and birds; and, in the bones of *fishes*, the earthy matters vary from 21 to 57 per cent. The scales of fishes have a composition somewhat similar to that of bone, but they contain phosphate of lime in small quantity only.

In certain diseases (the *craniotabes* in children), the earthy salts fall in the spongy portion of the bone as low as 28·16 per cent. of the dry bone; and in several cases the proportion of earthy matter was found by Schlossberger as low as 50 per cent. At the age of 21 years, the weight of the skeleton is to that of the whole body in the ratio of 10·5 : 100 in man, and in that of 8·5 : 100 in woman, the weight of the body being about 125 or 130 lbs.

The quantity of organic matter in *fossil bones* varies very considerably: in some cases it is found in as large a quantity as in fresh bones, while in others it is altogether wanting. Carbonate of lime generally occurs in far larger quantity in fossil than in recent bones, which may arise from infiltration of that salt from without, or from a decomposition of a portion of the phosphate of lime by carbonic acid or carbonates. Magnesia often occurs in larger quantities in the fossil remains of vertebrated animals than in the fresh bones of the present animal world. Liebig found in the cranial bones excavated at Pompeii a larger proportion of fluoride of calcium than in recent bones; while, on the other hand, Girardin and Preisser found that this salt had greatly diminished in bones which had lain long in the earth, and, in some cases, had even wholly disappeared.

The gelatinous tissue of bones was found by Von Biria to consist of:—

	Ox bones.	Fossil bones.
Carbon - - - -	50·401	50·130
Hydrogen - - - -	7·111	7·073
Nitrogen - - - -	18·154	18·449
Oxygen - - - -	24·119	24·348
Sulphur - - - -	0·216	

This is the same composition as that of the gelatinous tissues.

In the arts, bones are employed by turners, cutlers, manufacturers of animal charcoal, and, when calcined, by assayers, for making cupels. In agriculture, they are em-

Digitized by Google

ployed as a manure. Laid on in the form of dust, at the rate of 30 to 35 cwts. per acre, they have been known to increase the value of old pastures from 10*s.* or 15*s.* to 30*s.* or 40*s.* per acre; and after the lapse of 20 years, though sensibly becoming less valuable, land has remained still worth two or three times the rent it paid before the bones were laid on. In the large dyeing establishments in Manchester, the bones are boiled in open pans for 24 hours, the fat skimmed off and sold to the candle makers, and the *size* afterwards boiled down in another vessel till it is of sufficient strength for stiffening the thick goods for which it is intended. The *size* liquor, when exhausted or no longer of sufficient strength, is applied with much benefit as a manure to the adjacent pasture and artificial grass lands, and the exhausted bones are readily bought up by the Lancashire and Cheshire farmers. When burned bones are digested in sulphuric acid diluted with twice its weight of water, a mixture of gypsum and acid phosphate of lime is obtained, which, when largely diluted with water, forms a most valuable liquid manure for grass land and for crops of rising corn; or, to the acid solution, pearl ashes may be added, and the whole then dried up, by the addition of charcoal powder or vegetable mould, till it is sufficiently dry to be scattered with the hand as a top dressing, or buried in the land by means of a drill.

In France, soup is extensively made by dissolving bones in a steam heat of two or three days' continuance. Respecting the nutritive property of such soup, Liebig has expressed the following strong opinion:—"Gelatine, even when accompanied by the savoury constituents of flesh, is not capable of supporting the vital process; on the contrary, it diminishes the nutritive value of food, which it renders insufficient in quantity and inferior in quality, and it overloads the blood with nitrogenous products, the presence of which disturbs and impedes the organic processes." The erroneous notion that gelatine is the active principle of soup arose from the observation that soup made, by boiling, from meat, when concentrated to a certain point, *gelatinises*. The jelly was taken to be the true soup until it was found that the best meats did not yield the finest gelatine tablets, which were obtained most beautiful and transparent from tendons, feet, cartilage, bones, &c. This led to an investigation on nutrition generally, the results of which proved that gelatine, which by itself is tasteless, and when eaten excites nausea, possesses no nutritive value whatever.

The following Table exhibits the relation between the combustible animal matter and the mineral substances of bones, as found by different observers:—

	Organic Portion.	Inorganic Portion.	Observers.
Ox bones	1	2·0	Berzelius.
	1	2·1	Marchand.
Human bones	1	2·0	Berzelius.
	1	1·8 to 2·3	Frerichs.
	1	2·0 in mean	
	1	1·6 to 2·2	Von Biria.
	1	1·9 in mean	
Bird bones	1	2·3 to 2·6	

Prior to the use of bones by the turner or carver, they require the oil, with which they are largely impregnated, to be extracted, by boiling them in, water and bleaching them in the sun or otherwise. This process of boiling, in place of softening, robs them of part of their gelatine, and therefore of part of their elasticity and contractibility likewise, and they become more brittle.

The forms of the bones are altogether unfavourable to their extensive or ornamental employment: most of them are very thin and curved, contain large cellular cavities for marrow, and are interspersed with vessels that are visible after they are worked up into spoons, brushes, and articles of common turnery. The buttock and shin bones of the ox and calf are almost the only kinds used. To whiten the finished works, they are soaked in turpentine for a day, boiled in water for about an hour, and then polished with whitening and water.

Holtzapffel also informs us that after the turning tool, or scraper, has been used, bone is polished, 1st, with glass paper; 2nd, with Trent sand, or Flanders brick, with water on flannel; 3rd, with whiting and water on a woollen rag; 4th, a small quantity of white wax is rubbed on the work with a quick motion; the wax fills the minute pores, but only a very minute portion should be allowed to remain on the work. Common bone articles, such as nail and tooth brushes, are frequently polished with slaked lime used wet on flannel or woollen cloth. See "On Bone and its Uses," by Arthur Aitkin, *Trans. of Society of Arts*, 1832 and 1839.

The importance of the trade in bones will be seen from the following statement of *Imports*, in 1864, of the bones of animals and fish—not whalebone.

Digitized by Google

Applicable to Manufacturing Purposes.

	Tons.	Computed real value.		Tons.	Computed real value.
From France - -	364	£2,876	From Bengal and Pegu - -	486	£3,789
„ Chili - -	356	2,759	„ Australia -	413	3,239
„ Brazil - -	3,231	25,215	„ Other Parts -	574	4,512
„ Uruquay -	452	3,521		8,042	62,836
„ Argentine Confederation -	2,155	16,839			
„ Bombay and Scinde -	11	86			

For Manure.

From Russia - -	6,687	37,659	From Austrian Territories -	1,068	6,081
„ Denmark -	1,993	11,046	„ Turkey Proper	3,003	16,643
„ Schleswig and Holstein -	1,198	6,788	„ Wallachia -	725	4,159
„ Prussia -	1,449	8,315	„ Chili - -	425	2,413
„ Hamburg -	2,932	16,668	„ Brazil - -	6,533	37,444
„ Holland -	2,771	16,101	„ Uruquay -	11,895	67,108
„ Italy: Sardinian States	2,044	11,669	„ Argentine Confederation -	10,393	59,473
„ Tuscany -	1,242	6,978	„ Other parts -	5,515	31,440
„ Naples and Sicily -	955	5,384		60,828	345,369

BONE BLACK (*Noir d'os*, Fr.; *Knochenschwartz*, Germ.), or *Animal Charcoal*, as it is less correctly called, is the black carbonaceous substance into which bones are converted by calcination in close vessels. This kind of charcoal has two principal applications—to deprive various solutions, particularly syrups, of their colouring matters, and to furnish a black pigment. The latter subject will be treated of under IVORY BLACK.

The discovery of the antiputrescent and decolouring properties of charcoal in general is due to Lowitz, of Petersburg; but their modifications have occupied the attention of many chemists since his time. Kels published, in 1798, some essays on the decolouring of indigo, saffron, madder, syrup, &c., by means of charcoal; but he committed a mistake in supposing bone black to have less power than the charcoal of wood. The first useful application of charcoal to the purification of raw colonial sugar was made by M. Guillon, who brought into the French markets considerable quantities of fine syrups, which he discoloured by ground wood charcoal, and sold them to great advantage, as much superior to the *cassonades* (brown sugars) of that time. In 1811, M. Figuier, an apothecary at Montpellier, published a note about animal charcoal, showing that it blanched vinegars and wines with much more energy than vegetable charcoal; and lastly, in 1812, M. Derosnes proposed to employ animal charcoal in the purification of syrups and sugar refining. The quantities of bone black left in the retorts employed by MM. Payen, for producing crude carbonate of ammonia, furnished abundant materials for making the most satisfactory experiments, and enabled these gentlemen soon to obtain ten per cent. more of refined sugar from the raw article than had been formerly extracted, and to improve, at the time, the characters of the lumps, bastards, treacle, &c.

The calcination of bones is effected by two different systems of apparatus; by heating them in a retort similar to that in which coal is decomposed in the gas works, or in small pots piled up in a kiln. On the second plan, which furnishes the best charcoal, the bones, broken into pieces, are put into small cast-iron pots of the form shown in *fig.* 201, about three-eighths of an inch thick, two of which are dexterously placed with their mouths in contact, and then luted together with loam. The lip of the upper pot is made to slip inside the under one. These double vessels, containing together about fifty pounds of bones, are arranged alongside, and over each other, in an oven like a potter's kiln, till it is filled. The oven or kiln may be either oblong or upright. The latter is represented in *figs.* 202, 203, 204. A is the fire-place or grate for the fuel; C C are the openings in the dome of the furnace through which the flame flows; the divisions of these orifices are shown in *fig.* 204. B is the wall of brick-work. D the space in which the pots are distributed. E is the door by which the workman carries in the pots, which is afterwards built up with fire-

Digitized by Google

bricks, and plastered over with loam. This door is seen in *fig.* 202. F F are the lateral flues for conveying the disengaged gases into the air.

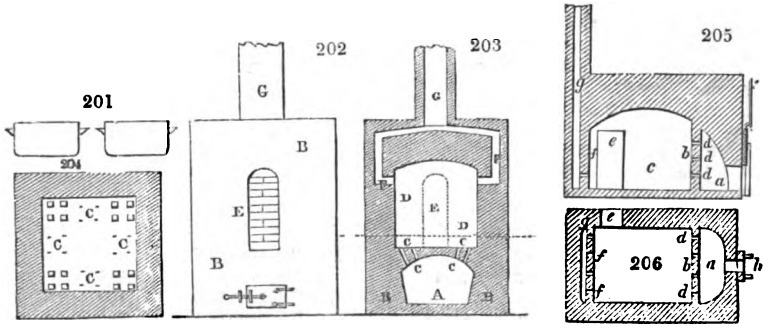

Fig. 205 is a longitudinal section, and *fig.* 206 a ground plan of a horizontal kiln for calcining bones. *a* is the fire-chamber, lying upon a level with the sole of the kiln; it is separated by a pillar *b*, from the calcining hearth *c*. In the pillar or wall, several rows of holes, *d*, are left at different heights; *e* is the entrance door; *f*, the outlet vents for the gases, vapours, and smoke, into the chimney *g*; *h*, a sliding damper-plate for regulating the admission of the air into the fire in the space *a*.

By this arrangement the offensive emanations are partly consumed, and partly carried off with the smoke. To destroy the smell completely, the smoke should be made to pass through a second small furnace.

The number of pots that may be put into a kiln of this kind depends, of course, upon its dimensions; but, in general, from 100 to 150 are piled up over each other, in columns, at once; the greatest heat being nearest the roof of the kiln, which resembles, in many respects, that used for baking pottery ware.

In both kilns the interior walls are built of fire-bricks. In the oblong one, the fiercest heat is near the vaulted roof; in the upright one, near the sole; and the pots, containing the larger lumps of bones, should be placed accordingly near the top of the former and the bottom of the latter. Such a kiln may receive about seventy double pots, containing in the whole thirty-five cwts. of bones.

After the hearth is filled with the pots, and the entrance door is shut, the fire is applied at first moderately, but afterwards it must be raised, and maintained at a brisk heat for eight or ten hours. The door of the ash-pit and the damper may now be nearly closed, to moderate the draught, and to keep up a steady ignition for six or eight hours longer, without additional firing; after which the doors must be all opened to cool the furnace. When this is done, the brick-work of the entrance-door must be taken down, the kiln must be emptied, and immediately filled again with a set of of pots previously filled with bones, and luted together: the pots which have been ignited may, in the course of a short time, be opened, and the contents put into the magazine. But in operating with the large decomposing cylinder retort, the bones being raked out hot, must be instantly tossed into a receiver, which can be covered in air-tight till they are cool.

The bones lose upon an average about one-half of their weight in the calcination. In reference to the quality of the black, experience has shown that it is so much more powerful as a decolouring agent, as the bones from which it was made have been freer from adhering fatty, fleshy, and tendinous matters.

The charcoal is ground in mills with grooved rollers, in order to prevent the formation of dust. The bones are thrown into a long quadrangular box, furnished at its lower aperture with movable steel cheeks, between which the roller revolves; they are thus coarsely broken up, and the granulation is completed by another pair of bluntly grooved rollers, which can be placed nearer to, or further from, each other at pleasure. The crushed charcoal is collected on sieves, which separate the dust from the grains.

The composition of perfectly dry bone black of average quality is as follows:— Phosphate of lime, with carbonate of lime, and a little sulphuret of iron, or oxide of iron, 88 parts; iron in the state of silicated carburet, 2 parts; charcoal containing about $\frac{1}{13}$th of nitrogen, 10 parts. None of the substances present, except the charcoal, possess separately any decolorising power.

It was formerly supposed that the peculiar absorbing and decolouring power of animal charcoal was only exerted towards bodies of *organic* origin; but it was found,

Digitized by Google

by Graham, that *inorganic* substances are equally subject to this action; and later experiments have demonstrated that there are few, if any, chemical compounds which altogether resist the absorbing power of charcoal. The action is of a mechanical nature, and in some cases it is sufficiently powerful to overcome chemical affinities of considerable power. It is not confined to charcoal, though pre-eminent in this substance, in consequence of the immense extent of surface which its porous structure presents. The action of charcoal in sugar refining has been particularly studied by Lüdersdorf. When the defecated saccharine juice is allowed to flow upon a moist and firmly compressed charcoal filter, pure water is the first product that passes through; but a considerably larger quantity is obtained than was employed for moistening the charcoal. Water is then obtained of a decidedly saline character, which increases in strength, and after this has passed through for some time, a sweet taste becomes perceptible, which gradually increases, and at last entirely masks the saline. This purely sweet fluid continues to flow for some time; after which, the liquid acquires an alkaline reaction from the presence of caustic lime; it then becomes coloured, the liquor getting gradually darker, till the action of the charcoal ceases. Lime is completely abstracted from lime water by bone charcoal; and, according to the experiments of Chevallier, lead salts are likewise entirely absorbed, the acetate the most readily. It has also been shown by Graham, that iodine even is separated from iodide of potassium. The commercial value of animal charcoal has usually been estimated by its decolouring power on sulphate of indigo; its absorbent power, which is a property of equal, perhaps of greater importance, may, according to M. Corenwinder, be determined, approximatively, by the quantity of lime which a given weight will absorb. For this purpose he employs a solution of saccharate of lime of known strength. An acid liquor is first prepared, composed of 20 grammes of pure oil of vitriol diluted with water to exactly 1 litre. A solution of saccharate of lime is then prepared, by dissolving 125 to 130 grammes of white sugar in water, adding thereto 15 to 20 grammes of quick-lime, boiling the liquid, and then filtering to separate the undissolved lime. This solution is prepared of such a nature, that it will be exactly saturated by the same volume of the dilute sulphuric acid. By adding the latter to 50 cubic centimetres of the liquid filtered from the animal charcoal, it is easy to see how many degrees of the burette are required to complete the saturation of the lime. Suppose 35 are required for this purpose, $100-35=65$, which represent the proportion of lime absorbed by the charcoal: this is, therefore, the number representing the standard. By operating with a burette graduated from the bottom, the degree of the charcoal experimented upon may be read directly.

This decolourising power does not belong alone to bone black; different varieties of lignite, or even coal, when well carbonised in close vessels, afford a decolouring charcoal of considerable value. By reducing 100 parts of clay into a thin paste with water, kneading into it 20 parts of tar and 500 of finely ground pit-coal, drying the mixed mass, and calcining it out of contact of air, a charcoally matter may be obtained not much inferior to bone black in whitening syrups.

The restoration of animal charcoal from burnt bones, for the purpose of sugar refining, has been long practised in France. Mr. W. Parker has made the following process the subject of a patent. The charcoal, when taken from the vessels in which it has been employed for the purposes of clarifying the sugar, is to be thoroughly washed with the purest water that can be obtained, in order to remove all the saccharine matter adhering to it. When the washing process has been completed, the charcoal is laid out to dry, either in the open air or in a suitable stove; and when perfectly free from moisture, it is to be separated into small pieces and sifted through a sieve, the wire or meshes of which are placed at distances of about two and a half in every inch. This sifting will not only divide the charcoal into small pieces, but will cause any bits of wood or other improper matters to be separated from it.

The charcoal thus prepared is then to be packed lightly in cylindrical vessels called crucibles, with some small quantity of bones, oil, or other animal matter, mixed with it. The crucibles are then closed by covers, and luted at the joints, leaving no other opening but one small hole in the centre of the cover, through which any gas generated within the vessel when placed in the oven or furnace may be allowed to escape.

The crucibles are now to be ranged round the oven, and placed one upon another, in vertical positions; and when the oven is properly heated, gas will be generated within each crucible, and issue out from the central hole. The gas thus emitted, being of an inflammable quality, will take fire, and assist in heating the crucibles; and the operation being carried on until the crucibles become of a red heat, the oven is then to be closed, and allowed to cool; after which the crucibles are to be removed, when the charcoal will be found to have become perfectly renovated, and as fit for use as before.

Digitized by Google

207

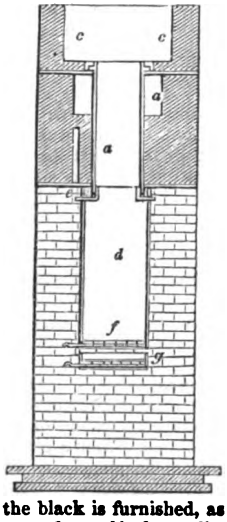

208

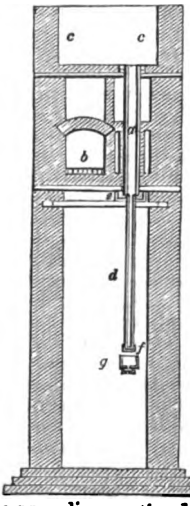

A process for the restoration of bone-black, or animal charcoal, was made the subject of a patent by Messrs. Bancroft and Mac Innes of Liverpool, which consists in washing the granular charcoal, or digesting it, when finely ground, with a weak solution of potash or soda, of specific gravity 1·06. The bone black which has been used in sugar refining may be thus restored, but it should be first cleared from all the soluble filth by means of water.

Mr. F. Parker's method, patented in June, 1839, for effecting a like purpose, is by a fresh calcination, as follows :—

Fig. 207 represents a front section of the furnace and retort; and *fig.* 208 a transverse vertical section of the same. *a* is a retort, surrounded by the flues of the furnace *b*; *c* is a hopper or chamber, to which a constant fresh supply of the black is furnished, as the preceding portion has been withdrawn, from the lower part of *a*. *d* is the cooling vessel, which is connected to the lower part of the retort *a* by a sand joint *e*. The cooler *d* is made of thin sheet iron, and is large; its bottom is closed with a slide plate, *f*. The black, after passing slowly through the retort *a* into the vessel *d*, gets so much cooled by the time it reaches *f*, that a portion of it may be safely withdrawn, so as to allow more to fall progressively down; *g* is the charcoal-meter, with a slide door.—H. M. N.

BONE OIL. See DIPPEL'S OIL.

BOOKBINDING. Books are said to be either *stitched*, or in *boards*, or *half-bound*, or *bound*. The first consists simply of stitching the sheets together. The second, of placing the sheets, after they have been stitched, between millboard sides, which are covered with paper or cloth, and with the backs lettered and ornamented. The third is a process of more perfectly securing the leaves, and of placing them between boards with a back of leather, the side-boards being covered with marble paper. Books are whole bound when the sides as well as back are covered with leather. Bookbinding is performed in the following manner :—The sheets are first folded into a certain number of leaves, according to the form in which the book is to appear as follows :—

The folio consists of	2	leaves
„ quarto of	4	„
„ octavo of	8	„
„ duodecimo of	12	„

When the leaves are thus folded and arranged in proper order, they are, if the books have been *long printed*, usually beaten upon a stone with a heavy hammer, to make them solid and smooth, and are then subjected to severe pressure in a powerful press; but in the case of newly-printed books, pressure alone is considered sufficient. Beating, or severe pressure, would spoil the book; because the ink, not being well dried, would "set off" on the opposite pages.

The employment in bookbinding of a rolling-press for smoothing and condensing the leaves, instead of the hammering which books have usually received, is an improvement introduced several years ago into the trade by Mr. W. Burn. His press consists of two iron cylinders about a foot in diameter, adjustable in the usual way by means of a screw, and put in motion by the power of one man, or of two if need be, applied to one or two winch handles. In front of the press sits a boy who gathers the sheets into packets, by placing two, three, or four upon a piece of tin plate of the same size, and covering them with another piece of tin plate; and thus proceeding by alternating tin plates and bundles of sheets till a sufficient quantity has been put together, which will depend on the stiffness and thickness of the paper. The packet is then passed between the rollers and received by the man who turns the winch, and who has time to lay the sheets on one side and to hand over the tin plates by the time that the boy has prepared a second packet. A minion bible may be passed

Digitized by Google

through the press in one minute, whereas the time necessary to beat it would be twenty minutes. It is not, however, merely a saving of time that is gained by the use of the rolling-press; the paper is made smoother than it would have been by beating; and the compression is so much greater, that a rolled book will be reduced to about five-sixths of the thickness of the same book if beaten. A shelf, therefore, that will hold fifty books bound in the usual way would hold nearly sixty of those bound in this manner — a circumstance of no small importance, when it is considered how large a space even a moderate library occupies, and that book-cases are expensive articles of furniture. The rolling-press is now substituted for the hammer by our principal bookbinders.

After the sheets have been thus prepared, they are sewed; for which purpose the sewing-press is employed.

Fig. 209 represents the sewing-press, as it stands upon the table, before which the bookbinder sits. *Fig.* 210 is a ground-plan without the parts *a* and *u* in the former figure. A is the base-board, supported upon the cross-bars *m n*, marked with dotted lines in *fig.* 210. Upon the screw rods *r r*, *fig.* 209, the nuts *t d* serve to fix the flat upper bar *n*, at any desired distance from the base. That bar has a slit along its middle, through which the hooks below *z z* pass down for receiving the ends of the sewing cords *p p*, fixed at *y y*, and stretched by the thumb-screws *z z*. The bar *y y* is let into an oblong space cut out of the front edge of the base-board, and fixed there by a movable pin *a*, and a fixed pin at its other end round which it turns. The cords or packthread, called "bands," are fixed at distances agreeably to certain saw-marks made in the backs of the sheets. The thread is drawn through the middle of each sheet and turned round each band, beginning at the first and proceeding to the last. The number of bands is usually six for folios, and five for quartos, three or four being employed for smaller sizes.

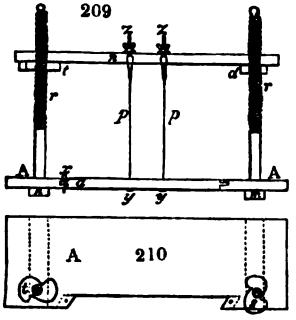

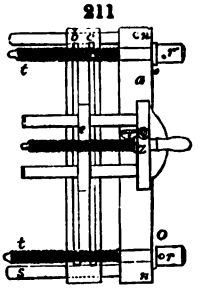

All the sheets being stitched together, and secured around the bands, the back is glued. The ends of the bands having been opened and scraped with a knife, they are, in common binding, pasted flatly upon the millboard sides; after which the back is beaten into a convex form with a hammer, the book being fixed in a press, between boards called backing boards, in order to form a groove for admitting the millboard sides. When the sides are applied in the better class of binding, holes are made in the millboard for drawing the bands through, the superfluous ends are cut off, and the parts are hammered smooth. The book is next pressed for cutting.

Fig. 211 is the bookbinder's cutting press, which is set upright upon a sort of chest for the reception of the paper shavings; and consists of three sides, being open above and to the left hand of the workman. The pressbar, or beam *a*, has two holes *n n* upon its under surface, for securing it to two pegs standing on the top of the chest. The screw rods *t t* pass through two tapped holes in the bar, marked *b c*, at its upper end; their heads *r r* being held by the shoulders *o o*. The heads are pierced with holes into which lever pins are thrust for screwing the rods hard up. The heavy beam *a* remains immovable, while the parallel bar with the book is brought home towards it by the two screws. The two rulers *s s* serve as guides to preserve the motions truly parallel; and the two parallel lath bars *b c* guide between them the end bar *e* of the plough, whose knife is shown at *i*, with its clamping screw *z*.

A machine for cutting the edges of books, bank-notes, &c., either truly square or polygonal, with mathematical precision, was patented by Mr. Wilson, and is much used, being known as Wilson's cutting machine or the millstone. *Fig.* 212 represents an end elevation of the machine; *fig.* 213, a side view of the same, the letters of reference indicating the same parts of the machine in each of the figures.

Digitized by Google

a is the top cross bar with rectangular grooves *b b*; *c c* are side posts; *d d* cross feet to the same, with strengthening brackets; *e e* a square box in which the press stands, for holding waste cuttings. *Fig.* 214 is a cross section of the upright posts *c c* taken horizontally. There are rectangular grooves in the upright posts, for the projecting ends of the cast-iron cross bracket *f* to slide up and down in. In the middle of the under side of this piece *f* there is a boss, within which is a round recess, to receive the top of the screw *g*, which works in the cast-iron cross piece *h*, similarly made with the former, but bolted firmly to the posts *c c*. Upon the screw *g* there is a circular

212

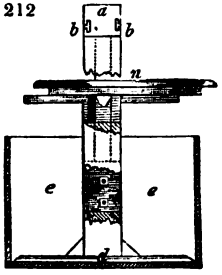

213

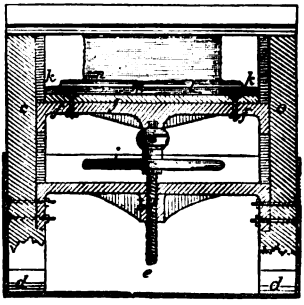

handle or ring *i*, for partially turning the screw, and immediately over it cross holes for tightening the press by means of a lever bar. Upon the cross piece *f* is bolted the board *j*, and upon each end of this board is made fast the rabbetted pieces *k k*, for another board *l* to slide in. Across the middle of this board, and parallel to the

216

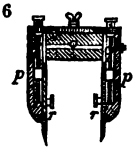

217

218

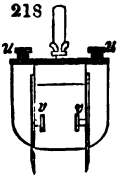

219

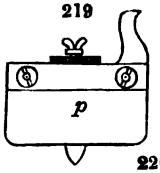

220

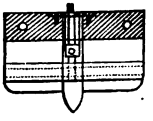

222

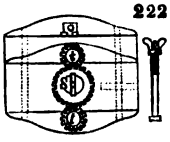

215

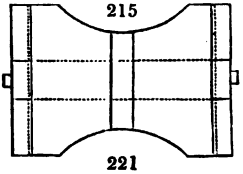

221

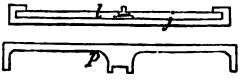

214

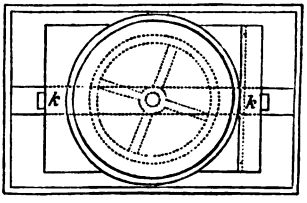

pieces *k k*, the tongue piece *m* is made fast, which fits into a groove at the bottom of board *l*. A horizontal representation of this is seen at *fig.* 215; and immediately under this view is also seen an end view of *l* and *f* connected together, and a side view of *f* by itself. In the middle of the board *l* is a pin for a circular board *n* to turn upon, and upon this latter board is placed the "material to be cut," with a saving piece between it, and the circular piece which is to be divided upon its edge into any number of parts required, with a stationary index on the board *l* to point to each.

It will now be understood that the material to be cut, may be turned round upon the centre pin of the board *n*, and also that both it and the board can be shifted backward and forward under the top cross piece *a*, and between the side slide slips *k k*, the surfaces of which should also be divided into inches and tenths.

Digitized by Google

The plough (*fig.* 216) is made to receive two knives or cutters, and which are situated in the plough in the following manner:—The plough is composed of three principal parts—namely, the top, and its two sides. The top, *o*, is made the breadth of the cross piece *a*, and with a handle made fast thereon. The sides, *p p*, are bolted thereto with bolts and nuts through corresponding holes in the top and sides. The figures give inside views and cross sections of the details of the manner in which the cutters and adjustments are mounted. A groove is cut down each cheek or side, in which are placed screws that are held at top and bottom from moving up and down, but, by turning, they cause the nuts upon them to do so; they are shown at *q q*. These nuts have each a pin, projecting inwards, that goes into plain holes made in the top ends of cutters *r r*.

The cutters and the work for causing them to go up and down are sunk into the cheeks, so as to be quite level with their inner surfaces. *Fig.* 217 shows one of those screws apart, how fixed, and with movable nut and projecting pin. The top of each screw terminates with a round split down, and above it a pinion-wheel and boss thereon, also similarly split. This pinion fits upon the split pin. Above, there is cross section of a hollow coupling cap, with steel tongue across, that fits into both the cuts of the screw pin and pinion boss, so that, when lowered upon each other, they must all turn together. In the middle and on the top of the upper piece, *o*, the large wheel, *s*, runs loose upon its centre, and works into the two pinion wheels, *t t*. The wheel *s* has a fly nut with wings mounted upon it.

It will now be seen, when the plough is in its place, as at *fig.* 218, that if it be pushed to and fro by the right hand, and the nut occasionally turned by the left, the knives, or cutters, will be protruded downwards at the same time, and these either will or will not advance as the coupling caps, *u u*, are on or off. The ribs, *v v*, run in the grooves, *b b* (*fig.* 212), and keep the cutters to their duty, working steadily. The top cross bar, *a*, is the exact breadth of a bank note, by which means both knives are made to cut at the same time. The paper is cut uniformly to one length and accurately square. By the use of this machine, the air-pump paper-wetting apparatus, and appendant press, the paper of 45,000 notes is fully prepared in one hour and a half by one person, and may then be printed. It is not so much injured by this process as by the ordinary method of clipping by hand, soaking it, &c. The wood-cuts to *fig.* 222 represent the plough in its different positions.

One of the improvements in the art of bookbinding is that for which Mr. William Hancock obtained a patent. After folding the sheets in double leaves, he places them vertically, with the edges forming the back of the book downwards, in a concave mould, of such rounded or semi-cylindrical shape as the back of the book is intended to have. The mould for this purpose consists of two parallel upright boards, set apart upon a cradle frame, each having a portion or portions cut out vertically somewhat deeper than the breadth of the book, but of a width nearly equal to its thickness before it is pressed. One of these upright boards may be slidden nearer to or farther from its fellow, by means of a guide-bar attached to the sole of the cradle. Thus the distance between the concave bed of the two vertical slots in which the book rests, may be varied according to the length of the leaves. In all cases about one-fourth of the length of the book at each end projects beyond the board, so that one-half rests between the two boards. Two or three packthreads are now bound round the leaves, thus arranged, from top to bottom of the page in different lines, in order to preserve the form given to the back by the mould in which it lay. The book is next subjected to the action of the press. The back, which is left projecting *very slightly* in front, is then smeared carefully by the fingers with a solution of caoutchouc, whereby each paper edge receives a small portion of the cement. In a few hours it is sufficiently dry to take another coat of a somewhat stronger caoutchouc solution. In 48 hours, four applications of the caoutchouc may be made and dried. The back and the adjoining part of the sides are next covered with the usual band or fillet of cloth, glued on with caoutchouc; after which the book is ready to have the boards attached, and to be covered with leather or parchment, as may be desired.

We thus see that Mr. Hancock dispenses entirely with the operation of stitching, sewing, sawing-in, hammering the back, or the use of paste and glue. Instead of leaves attached by thread stitches at two or three points, we have them agglutinated securely along their whole length. Books bound in this way open so perfectly flat upon a table, without strain or resilience, that they are equally comfortable to the student, the musician, and the merchant. The caoutchouc cement, moreover, being repulsive to insects and not affected by humidity, gives this mode of binding some superiority over the old method with paste or glue. For engravings, atlases, and ledgers, this binding is admirably adapted, because it allows the pages to be displayed most freely without the risk of dislocating the volume; but, for security,

Digitized by Google

three or four stitches should be made. The leaves of music books bound with caoutchouc, when turned over, lie flat at their whole extent, as if in loose sheets, and do not torment the performer like the leaves of the ordinary books, which are so ready to spring back again. Manuscripts and collections of letters which happen to have little or no margin left at the back for stitching them by, may be bound by Mr. Hancock's plan without the least encroachment on the writing. The thickest ledgers thus bound open as easily as paper in quire, and may be written on up to the innermost margin of the book without the least inconvenience.

An ingenious invention, for which Mr. Thomas Richards, of Liverpool, bookbinder, obtained a patent in April, 1842, is called by him "mechanical bookbinding." He employs, 1st, a mechanism to sew, weave, or bind a number of sheets together to form a book, instead of stitching them by hand; 2ndly, a table which slides to and fro to feed or supply each sheet of paper separately into his machine; also needle bars, or holders, to present needles with the requisite threads for stitching such sheets as they are supplied with in succession. He has, moreover, a series of holding fingers, or pincers, suitably provided with motions, to enable them to advance and clasp the needles, draw them through the sheets of paper, and return them into their respective holders after threading or stitching the sheet; lastly, there are arms, or levers, for delivering each sheet regularly upon the top of the preceding sheets, in order to form a collection or book of such sheets, ready for boarding or finishing. A minute description of the whole apparatus, with plates, is given in Newton's "Journal," C.S. xxiii. 157.

After the sides have been attached to the book, they have to be covered with leather. For this purpose, the prepared skin, moistened with water, is cut to the size of the book, and the thickness of the edge is pared off on a marble stone. It is next smeared over with paste made of wheat flour, stretched over the millboard on the outside, and doubled over the edges within. The book is then corded, that is, bound firmly betwixt two boards to make the cover adhere strongly to the millboard and the back, on the exact performance of which the neatness of the book in a great measure depends. The back is then warmed at the fire to soften the glue, and the leather is rubbed down with a bodkin or folding stick, to set and fixed it close to the back of the book. It is now set to dry, and, when dry, the boards are removed; the cover of the book is then washed or sprinkled over with a little paste and water, the edges then sprinkled with a fine brush, by striking it against the hand or a stick, or with large spots, by being mixed with the solution of green vitriol, or they are marbled. Two blank leaves are then pasted down to the cover, and the edges of the leaves, when dry, are burnished in the press, and the cover rolled on its edges. The cover is now glazed twice with the white of an egg, filleted, and, last of all, polished, by passing a hot iron over the glazed colour.

Nothing places in so striking a point of view the superior taste, judgment, and resources of London tradesmen over those of the rest of the world, than the extensive substitution which they have recently made of embossed silks and calicoes for leather in the binding of books. In old libraries, cloth-covered boards indeed may occasionally be seen, but they have the meanest aspect, and are in no respect to be compared with our modern cloth binding. The silk or calico may be dyed of any shade which use or fancy may require, impressed with gold or silver foil in every form, and variegated by ornaments in relief, copied from the most beautiful productions in nature. This new style of binding is distinguished not more for its durability, elegance, and variety, than for the economy and despatch with which it ushers the offspring of intellect into the world. For example, should a house eminent in this line receive 5000 volumes from Messrs. Longman and Co. upon Monday morning, they can have them all ready for publication within the incredibly short period of two days. The reduction of price is not the least advantage incident to the new method, amounting to fully 50 per cent. upon that with leather.

The dyed cloth being cut by a pattern to the size suited to the volume, is passed rapidly through a roller press, between engraved cylinders of hard steel, whereby it receives at once the impress characteristic of the back and the sides along with embossed designs over the surface in sharp relief. The cover thus rapidly fashioned is as rapidly applied by paste to the stitched and pressed volume, no time being lost in mutual adjustments, since the steel rollers turn off the former of a shape precisely adapted to the latter. Hard-glazed and varnished calico is moreover much less an object of depredation to moths and other insects than ordinary leather has been found to be.

BORACIC ACID. (*Acide Borique*, Fr. BO^3; chemical equivalent, 34·9; specific gravity, 1·83.) Supposed to be the *chrysocolla* of Pliny. In the seventh century. Geber mentions borax; and it was described by Geoffroy and by Baron in the early

Digitized by Google

part of the eighteenth century. Boracic acid was formerly called *Homberg's sedative salt.*

This acid occurs in several minerals, particularly as tincal, or crude biborate of soda, which is found in the form of incrustations in the beds of small lakes in Thibet, where it is dug up during the hot season. Sassolin, so called from its having been first obtained from one of the localities in Tuscany, named Sasso, is native boracic acid. It is found abundantly in the crater of Vulcano, one of the Lipari Islands, forming a layer on the sulphur and around the fumaroles, or exits, of the sulphurous exhalations. The native stalactitic salt, according to Klaproth, contains mechanically mixed sulphate of magnesia and iron, sulphate of lime, silica, carbonate of lime, and alumina. Erdmann has stated that sassolin contains 3·18 per cent. by weight of ammonia, and, instead of being pure boracic acid, that it is a borate of ammonia. Native boracic acid is composed of boracic acid, 56·4; water, 43·6.—*Dana.* See TINCAL.

Hayescine is another mineral containing boracic acid, which has been within the last few years imported in Liverpool from Peru. Hayescine is a borate of lime, having a composition of boracic acid. 45·46; lime, 14·32; soda, 8·22; potash, 0·51; sulphuric acid, 1·10; chloride of sodium, 2·65; sand, 0·32. This analysis was made by Mr. A. Dick in the metallurgical laboratory of the Museum of Practical Geology. It occurs over the dry plains of Iquique, in Southern Peru, in white reniform masses, from the size of a hazel nut to that of a potato, where it is called *tiza.*

In many other parts of South America, minerals containing boracic acid are known to exist; and they are said to be abundant in some parts of Brazil. The great supply of boracic acid, however, is derived from the Boracic Acid lagoons of Tuscany. Before the discovery of this acid, in the time of the Grand Duke Leopold I., by the chemist Hæfer, the fetid odour developed by the sulphuretted hydrogen gas and the disruptions of the ground occasioned by the appearance of new *suffioni*, or vents of vapour, had made the natives regard them as a diabolical scourge, which they sought to remove by priestly exorcisms; but since science has explained the phenomena, the *fumachi* have become a source of public prosperity, and, were they to cease, would be prayed to return. The vapours, containing a very minute quantity of boracic acid, which issue from the lakes in the lagoons of this volcanic district, keep the waters always at a boiling temperature; hence, after impregnation for 20 or 30 hours, by the steams pouring through the highest lake, the waters are drawn off into a second lake, to suffer a fresh impregnation. Thence they are drawn into a third, and so on, till they reach the lowest receptacle. In this passage they get charged with ½ per cent. of boracic acid. They are then concentrated in leaden reservoirs by the heat of the vapours themselves.

The liquid, after having filled the first compartment, is diffused very gradually into the second, then into the third, and successively to the last, where it reaches such a state of concentration that it deposits the crystallised acid, the workmen remove it immediately by means of wooden scrapers. This mode of gradual concentration is very ingenious, and requires so few hands, that it may almost be said that the acid is obtained without expense. From 1818 to 1845, the quantity of acid manufactured was 33,349,095 Tuscan pounds. From 1839 to 1845, the mean quantity has been 2,500,000 lbs.

Thus, in estimating the product at 7500 lbs. per day, the quantity of saturated water upon which they operate is 1,500,000 daily, and annually 547,500,000 lbs.

This labour brings to Tuscany 10,000,000 francs. It is surprising that it should have remained unproductive for so many ages, and that it should have been reserved for the skill of Count Larderel, of Monte Cerboli — before 1818 a simple wandering merchant, entirely unacquainted with scientific researches — to discover the nature of the fugitive vapours, and render them a source of inexhaustible wealth.

Professor Graham, in his "Report on the Chemical Products of the Great Exhibition of 1851," thus speaks of Larderel's discovery:—

"The preparation of boracic acid by Count F. de Larderel, of Tuscany, was rewarded by a Council medal. Although this well-known manufacture is not recent, having attained its full development at least ten years, still the bold originality of its first conception, the perseverance and extraordinary resources displayed in the successful establishment, and the value of the product which it supplies, will always place the operations of Count de Larderel among the highest achievements of the useful arts, and demand the most honourable mention at this epoch. The vapour issuing from a volcanic soil is condensed, and the minute proportion of boracic acid which it contains (not exceeding 0·3 per cent.) is recovered by evaporation, in a district without fuel, by the application of volcanic vapour itself as a source of heat. The boracic acid thus obtained greatly exceeds in quantity the old and limited supply of borax from the upper districts of India, and has greatly extended the use of that salt in the glazes of porcelain, and recently in the making of the most brilliant crystal, when

Digitized by Google

combined with the oxide of zinc instead of oxide of lead."—*Reports of the Jurors of the Great Exhibition of* 1851.

The violence with which the scalding vapours escape from the *suffioni* gives rise to muddy explosions when a lake has been drained by turning its waters into another lake. The mud is then thrown out, as solid matters are ejected from volcanoes, and there is formed in the bottom of the lake a crowd of little cones of eruption, whose temperatures when in activity and play are generally from 120° to 145° C., and the clouds which they form in the lagoons constitute true natural barometers, whose greater or less density rarely disappoints the predictions that they announce to the inhabitants of those lagoons.

The boracic acid of the Tuscan lagoons is obtained from nine different works belonging to Count Larderel:—Sasso, Larderello, Lervazano, Monte Cerboli, Castel Nuovo, Monte Rotondo, San Frederigo, Lustignano, Lago, producing 163,855 avoirdupois pounds per month.

Although the boracic acid in the lagoons of Tuscany was discovered in 1777 by Peter Hoeffer, apothecary to the Grand Duke of Tuscany, until 1818 all the efforts made to render it profitable to obtain it were of the most desultory character, and generally failures. In 1818 Count Lardarel established the first works at Monte Carboli, and used *artificial heat* to effect the evaporation. In 1828 they began to *use the natural heat of the soffioni to evaporate the boracic waters of the lagoons*, effecting thus an enormous saving and greatly extending the works.

Count Lardarel furnished Mr. W. P. Jervis with the following statement of the production of boracic acid, from the commencement of the works to the year 1859.

	Tons.	Cwts.		Tons.	Cwts.
From 1818 to 1828 - -	521	16	1849 - -	1,043	13
„ 1829 „ 1838 - -	4,870	6	1850 - -	1,043	13
1839 - -	748	13	1851 - -	1,140	0
1840 - -	878	13	1852 - -	1,156	19
1841 - -	886	6	1853 - -	1,208	19
1842 - -	923	15	1854 - -	1,319	7
1843 - -	923	16	1855 - -	1,332	19
1844 - -	923	16	1856 - -	1,427	1
1845 - -	923	15	1857 - -	1,711	4
1846 - -	1,043	13	1858 - -	2,026	10
1847 - -	1,043	13	1859 - -	1,803	18
1848 - -	1,403	13			

Society of Arts' Journal.

The following, amongst other minerals, are found amidst the Lagoons of Tuscany.

	Boracic Acid.	Lime.	Silica, Alumina, &c.	Sesquioxide of Iron.	Water.	Ammonia.
Sassoline - -	56·4	- -	- -	- -	43.6	- -
Hayescine - -	57·13	20·85	1·75	- -	26·25	- -
Lagonite - -	47·95	- -	1·77	36·26	14·02	- -
Lardarelite -	68·56	- -	- -	- -	18·32	12·73

Beyond these there is Mascagrine, composed of sulphuric acid 52·33, ammonia 4-67, and water 12·00. M. Payen has given the following as the composition of this crude boracic acid for 100 kilogrammes:—

Pure crystallised boracic acid - - - -	74 to 84
Sulphate of ammonia, magnesia, and lime - -	14 to 8
Sand and sulphur - - - - - -	2·5 to 1·25
Hygroscopic water disengaged at 35° C. - -	7 to 5·75
Azotic matter, hydrochlorate of ammonia, &c. -	2·5 to 1

The processes of chemical alteration taking place beneath the crater of Vulcano, already spoken of, may, according to the statement of Hoffmann, depend upon conditions very similar to those existing in Tuscany. There, likewise, sulphuretted hydrogen is associated with the boracic acid, and, it would appear, in much greater quantity, since the fissures through which the vapour issues are thickly lined with sulphur, which is in sufficient quantity to be collected for sale. A profitable factory is established at the place, which yields daily, besides boracic acid and chloride of ammonium, about 1700 lbs. of refined sulphur and about 600 lbs. of pure alum.—*Bischof.*

Digitized by Google

In 1864 the following quantity of boracic acid was imported.

	cwts.	Computed real Value.
From Italy: Tuscany - - - - -	19,509	£48,774
Other Parts - - - - - -	158	396
	19,667	49,170

Foreign and Colonial produce exported 718 cwts. to the value of 1,795*l.*

BORAX. (*Borax*, Fr.; *Borar*, Germ.) A native saline compound of boracic acid and soda, found in Thibet, in China, in Persia, the island of Ceylon, and in South America; it has also been found in small quantities in Saxony. The crude product from the former locality was imported into Europe under the name of *tincal*, and was purified from some adhering fatty matter by a process kept a long time secret by the Venetians and the Dutch, and which consisted chiefly in boiling the substance in water with a little quicklime.

Gmelin found borax, in prismatic crystals, to contain 46·6 per cent. of water; and Arvredson gives as the composition of borax, in the calcined state, 68·9 of acid, and 31·1 soda, in 100 parts. M. Payen describes an octahedral borax, which contains only 30·64 per cent. of water, and is therefore preferred by the braziers in their soldering processes.

Anhydrous Borax, therefore, is composed of—

1 equivalent of boracic acid - - -	872	or	69·0
1 „ soda - - - - -	390	„	31·0
	1262	for	100·0

Octahedral Borax—

1 equivalent of boracic acid - - -	872	or	47·7
1 „ soda - - - - -	390	„	21·3
5 „ water - - - -	562·5	„	31·0
	1824·5	for	100·0

Prismatic Borax—

1 equivalent of boracic acid - - -	872	or	36·55
1 „ soda - - - - -	390	„	16·35
10 „ water - - - -	1·125	„	47·1
	2·387	for	100·00

Tincal was originally brought from a salt lake in Thibet; the borax was dug in masses from the edges and shallow parts of the lake; and in the course of a short time the holes thus made were again filled. The borate of soda has been found at Potosi, in Peru; and it has been discovered by Mr. T. Sterry Hunt, of the Geological Survey, in Canada, from whose report the following extract is made:—

"In the township of Joly there occurs a very interesting spring on the banks of the Ruisseau Magnenat, a branch of the Rivière Souci, about five miles from the mills of Methot at Saint Croix. The spring furnishes three or four gallons a minute of a water which is sulphurous to the taste and smell, and deposits a white matter along its channel, which exhibits the purple vegetation generally met with in sulphur springs. The temperature of this spring in the evening of one 7th of July was 46° F., the air being 52° F. The water is not strongly saline, but when concentrated is very alkaline and salt to the taste. It contains, besides chlorides, sulphates, and carbonates, a considerable proportion of boracic acid, which is made evident by its power of reddening paper coloured by turmeric, after being supersaturated with hydrochloric acid. . . . The analysis of 1000 parts of the water gave as follows:—

Chloride of sodium - - - - - -	0·3818
„ potassium - - - - - -	0·0067
Sulphate of soda - - - - - -	0·0215
Carbonate and borate of do. - - - - -	0·2301
„ of lime - - - - - -	0·0620
„ magnesia - - - - - -	0·0257
Silica - - - - - - - -	0·0245
Alumina - - - - - - - -	a trace
	0·7523

"The amount of boracic acid estimated was found to be equal to 0·0279."

Digitized by Google

Professor Bechi has analysed a borate occurring as an incrustation at the Tuscan lagoons, which afforded boracic acid 43·56, soda 19·25, and water 37·19. *Lagonite* is a mineral of an earthy yellow colour, which appears to be boracic acid and iron; while *Larderellite*, also from Tuscany, is a compound of boracic acid and soda. See *Dana*, and "American Journal of Science."

Borax has a sweetish, somewhat lixivial, taste, and affects vegetable colours like an alkali; it is soluble in 12 parts of cold and in 2 parts of boiling water. It effloresces and becomes opaque in a dry atmosphere; it appears luminous, by friction, in the dark. It melts at a heat a little above that of boiling water, and gives out its water of crystallisation, after which it forms a spongy mass, called calcined borax. The octahedral borax, which is prepared by crystallisation, in a solution of 1·255 specific gravity, kept up at 145° F., is not efflorescent. When borax is ignited, it fuses into a glassy-looking substance.

The following is the mode of purifying borax. The crude crystals are to be broken into small lumps, and spread upon a filter lined with a lead grating, under which a piece of cloth is stretched upon a wooden frame. The lumps are piled up to the height of 12 inches, and washed with small quantities of caustic soda lye of 5° B. (specific gravity 1·033) until the liquor comes off nearly colourless; they are then drained, and put into a large copper of boiling water, in such quantities that the resulting solution stands at 20° B. (specific gravity 1·160) Carbonate of soda equivalent to 12 per cent. of the borax must now be added; the mixed solution is allowed to settle, and the clear liquid is siphoned off into crystallising vessels. Whenever the mother waters get foul, they must be evaporated to dryness in cast-iron pots, and roasted, to burn away the viscid colouring matter.

The following process for refining the native Indian borax, or tincal, has been published by MM. Robiquet and Marchand:—

It is put into large tubs, covered with water for 3 or 4 inches above its surface, and stirred through it several times during six hours. For 400 lbs. of the tincal there must now be added 1 lb. of quicklime diffused through two quarts of water. Next day the whole is thrown upon a sieve, to drain off the water with the impurities, consisting, in some measure, of the fatty matter combined with the lime, as an insoluble soap. The borax, so far purified, is to be dissolved in 2½ times its weight of boiling water, and 8 lbs. of muriate of lime are to be added for the above quantity of borax. The liquor is now filtered, evaporated to the density of 18° or 20° B. (1·14 to 1·16 specific gravity), and set to crystallise in vessels shaped like inverted pyramids, and lined with lead. At the end of a few days, the crystallisation being completed, the mother waters are drawn off, the crystals are detached and dried. The loss of weight in this operation is about 20 per cent.

Borax is sometimes adulterated with alum and common salt: the former addition may be readily detected by a few drops of water of ammonia, which will throw down its alumina; and the latter by nitrate of silver, which will give with it a precipitate insoluble in nitric acid.

The native boracic acid obtained from the lakes of Tuscany, being manufactured in France into borax, has greatly lowered the price of this article of commerce. When MM. Payen and Cartier first began the business, they sold the crystals at the same price as the Dutch, viz., 7 francs the kilogramme (2¼ lbs. avoird.); but, in a few years, they could only obtain 2 francs and 60 centimes, in consequence of the market getting overstocked. The mode of making borax from the acid is as follows:—The lake water is evaporated in graduation houses, and then concentrated in boilers till it crystallises. In that state it is carried to Marseilles. About 1100 lbs. of water are made to boil in a copper, and 1320 lbs. of crystallised carbonate of soda are dissolved in it by successive additions of about 40 lbs. The solution being maintained at nearly the boiling point, 1100 lbs. of the crystallised boracic acid of Tuscany are introduced, in successive portions. At each addition of about 22 lbs. a lively effervescence ensues, on which account the copper should be of much greater capacity than is sufficient to contain the liquors. When the whole acid has been added, the fire must be damped by being covered up with moist ashes, and the copper must be covered with a tight lid and blankets, to preserve the temperature uniform. The whole is left in this state during 30 hours; the clear liquor is then drawn off into shallow crystallising vessels of lead, in which it should stand no higher than 10 or 12 inches, to favour its rapid cooling. At the end of three days in winter, and four in summer, the crystallisation is usually finished. The mother water is drawn off, and employed, instead of simple water, for the purpose of dissolving fresh crystals of soda. The crystals are carefully detached with chisels, redissolved in boiling water, adding for each 220 lbs. of borax, 22 lbs. of carbonate of soda. This solution marks 20° B. (specific gravity 1·160); and, at least, one ton of borax should be dissolved at

Digitized by Google

once, in order to obtain crystals of a marketable size. Whenever this solution has become boiling hot, it must be run off into large crystallising lead chests of the form of inverted truncated pyramids, furnished with lids, inclosed in wooden frames, and surrounded with mats to confine the heat. For a continuous business there should be at least 18 vessels of this kind, as the solution takes a long time to complete its crystallisation, by cooling to 30° C. (86° F.) The borax crystals are taken out with chisels, after the liquor has been drawn off and the whole has become cold.

One hundred parts of the purest acid, usually extracted from the lakes of Tuscany, contain only fifty parts of the real boracic acid, and yield no more, at the utmost, than 140 or 150 of good borax.

A considerable saving of expense in manufacturing borax, and a more ready application of the borax to use, has been proposed by Saulter, as follows:—Take about 38 parts of pure crystallised boracic acid, pounded and sifted; mix them well with 45 parts of crystals of carbonate of soda, in powder; expose the mixture upon wooden shelves to heat in a stove-room; and rake it up from time to time. The boracic acid and the alkali thus get combined, while the carbonic acid and water are expelled; and a perfect *dry borax* is obtained.

According to Wittstein, the commercial boracic acid is composed as follows:—

Sulphate of manganese	a trace
„ iron	0·365
„ alumina	0·320
„ lime	1·018
„ magnesia	2·632
„ ammonia	8·508
„ soda	0·917
„ potash	0·369
„ sal ammonia	0·298
„ silica (in solution)	1·200
„ sulphuric acid (combined with the boracic)	1·322
„ crystallisable boracic acid	76·494
Water	6·557
	100·000

Dry borax acts on the metallic oxides, at a high temperature, in a very remarkable manner, melting and vitrifying them into very beautiful coloured glasses. On this account it is a most useful reagent for the blowpipe. Oxide of chrome tinges it of an emerald green; oxide of cobalt, an intense blue; oxide of copper, a pale green; oxide of tin, opal; oxide of iron, bottle green and yellow; oxide of manganese, violet; oxide of nickel, pale emerald green. The white oxides impart no colour to it by themselves. In the fusion of metals, borax protects their surface from oxidisement, and even dissolves away any oxides formed upon them; by which twofold agency it becomes an excellent flux, invaluable to the goldsmith in soldering the precious metals, and to the brazier in soldering copper and iron.

Borax absorbs muriatic and sulphurous acid gases, but no others, whereby it becomes, in this respect, a useful means of analysis.

The strength or purity of borax may be tested by the quantity of sulphuric acid requisite to neutralise a given weight of it, as indicated by tincture of litmus.

When mixed with shellac in the proportion of one part to five, borax renders that resinous body soluble in water, and forms with it a species of varnish.

The applications of borax in the manufacture of enamels, glazes, and of glass, will be noticed in the articles devoted to the consideration of those special industries.

The importations of Borax in 1864 were :—

Borax Refined.

	cwts.	Computed real Value.
From British India :		
Bengal and Pegu	1,590	£3,362
Other Parts	72	54
	1,617	3,416

Unrefined or Tincal.

From British India :		
Bombay and Scinde	46	112
Bengal and Pegu	5,765	12,849
Other parts	5	10
	5,816	12,971

Digitized by Google

While our exports in the same year of borax, manufactured and refined in the United Kingdom, were as follows:

	cwts.	£
To Russia	1,128	3,187
Prussia	1,383	3,893
Hamburg	2,237	6,544
Holland	1,166	3,075
Belgium	1,924	5,195
France	4,202	11,564
Canada	375	1,058
Bahamas	397	1,167
Other countries	1,514	4,275
	14,326	39,958

BORATE OF LIME. See DATHOLITE, HAYESINE.

BORATES. Salts of boracic acid. See Watts' "Dictionary of Chemistry."

BORING. The importance of boring, as a means of searching for coal and for water, renders it necessary that some special attention should be given to the subject in a work devoted to manufactures and mining.

Boring for water appears to have been in use from the earliest periods, in Egypt and in Asia. In many of the desert tracts there are remains of borings, which served, evidently, at one period, to supply the wants of extensive populations which once inhabited those now deserted regions. In the "Guide du Sondeur," by M. J. Degousée, we find it stated, with reference to China, "There exist in the canton of Ou-Tong-Kiao many thousand wells in a space of ten leagues long by five broad. These wells cost a thousand and some hundred taëls (the taël being of the value of 6*s.* 6*d.*), and are from 1500 to 1800 feet deep, and about 6 inches in diameter. To bore these wells, the Chinese commence by placing in the earth a wooden tube of 3 or 4 inches diameter, surmounted by a stone edge, pierced by an orifice of 5 or 6 inches; in the tube a trepan is allowed to play, weighing 300 or 400 lbs. A man, mounted on a scaffold, swings a block, which raises the trepan 2 feet high, and lets it fall by its own weight. The trepan is secured to the swing-lever by a cord made of reeds, to which is attached a triangle of wood; a man sits close to the cord, and at each rise of the swing seizes the triangle and gives it a half turn, so that the trepan may take in falling another direction. A change of workmen goes on day and night, and with this continuous labour they are sometimes three years in boring wells to the requisite depth."

Boring appears to have been practised in England during the last century, but to a very limited extent; it has, however, for a considerable period been employed in seeking for coal, and in the formation of ARTESIAN WELLS (*which see*).

The ordinary practice of boring is usually carried out, by first sinking a well of such a depth that the boring apparatus can be fixed in it; and thus a stage, raised from the surface of the ground, is dispensed with. A stout plank floor, well braced together by planks nailed transversely and resting on putlocks, forms the stage. In the centre of the floor is a square hole, through which the boring-rods pass. The boring-rods are of many different forms, some of which have been already described in the article on ARTESIAN WELLS. A few others are represented in the following figure (223).

1, 2, 3 are an elevation, plan, and section of an auger; the tapped socket is for the purpose of allowing the rods to be screwed into it.

4, 5 are two views of a small auger, with a longitudinal slit, and no valve, which is used for boring through clay and loam. In very stiff clay the slit is generally made larger; in moist ground the slit is objectionable.

6, 7, 8 are different views of a shell. *a a* are valves opening upwards, to admit the material. These tools are used for boring through sand, or through ground which has been loosened by other tools.

9, 10, 11 show an S chisel, for cutting through rocks, flints, and the like.

Such are the principal tools employed. By referring to ARTESIAN WELLS, the general arrangement of the rods will be understood. The boring rods are turned round by the leverage of two handles moved by man, or, where the work is heavy, by horse, or sometimes, even steam power is applied. Besides the circular motion of the tool, a vertical percussive action of the same is required in certain cases, such as rock or hard sand; indeed, always, where the position of the augur or chisel requires a fresh place to act upon during its revolution. This motion is most readily got by suspending the boring rods to a windlass, through the intervention of a rope coiled two or three times round the latter, and adjusting it so that if the workman holds one end of the coil tight, sufficient will be the friction to raise the rods on putting the windlass

Digitized by Google

in motion. Should the end of the rope the workman holds now be slackened, the coil becomes loose, and the rods descend with a force equivalent to their weight and the distance through which they have fallen. A regular percussive action is thus gained by keeping the windlass continually in motion in one direction, the attendant workman alternately allowing the rods to be drawn up a certain distance, and then, by relaxing his hold, allowing them to fall. — *Swindell, on Boring.*

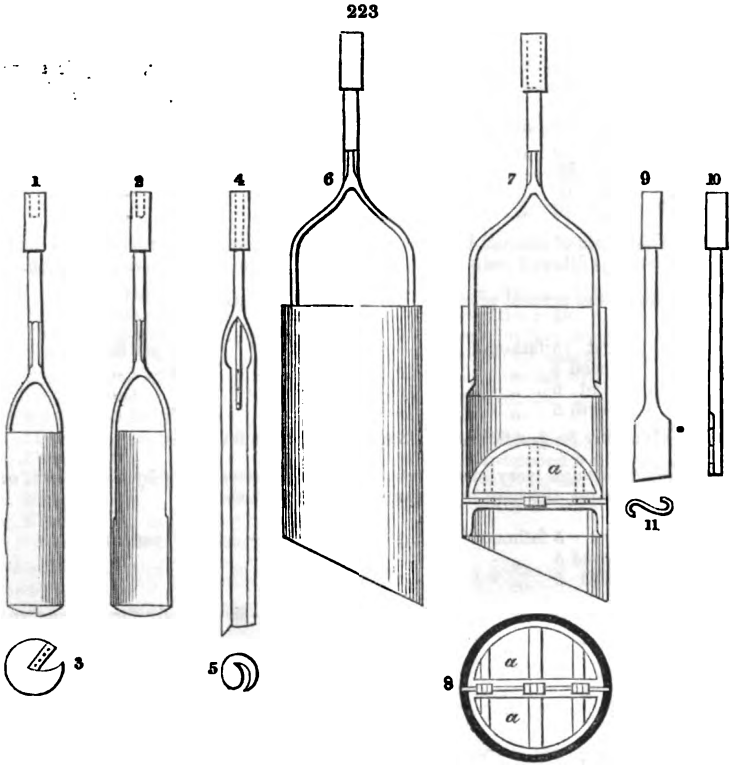

The following list of the prices of boring, in different localities, may prove useful :—

In the North of England, the prices for boring, in the ordinary strata of the district or of that coal field, are as follows :—

			s.	d.	
First	5	fathoms	5	6	per fathom.
Second	5	„	11	0	„
Third	5	„	16	6	„
Fourth	5	„	22	0	„

and so increasing 5*s.* 6*d.* per fathom on each succeeding depth of 5 fathoms. When any unusually hard strata are met with, the borer is paid by special arrangement, unless a binding contract has been previously made. It is sometimes usual for the borer to take all risk of hard strata, when the prices are as follows, the borer finding the tools : —

			s.	d.	
First	5	fathoms	7	6	per fathom.
Second	5	„	15	0	„
Third	5	„	22	6	„
Fourth	5	„	30	0	„

and so increasing 7*s.* 6*d.* per fathom on each succeeding depth of 5 fathoms.

Digitized by Google

In the Midland Counties, where the strata are more inclined than in the north of England, the prices for ordinary strata are as follows: —

			s.	d.	
First	20	yards	3	6	per yard.
Next	10	„	5	0	„
„	10	„	6	6	„
„	10	„	8	0	„
„	10	„	9	6	„

and so advancing 1*s.* 6*d.* per yard upon each 10 yards.

In some localities, where the boring is still more favourable, the prices are as follows, — the bore hole being $2\frac{1}{2}$ to $2\frac{3}{4}$ inches diameter: —

			s.	d.	
First	20	yards	3	6	per yard.
Next	10	„	4	6	„
„	10	„	5	6	„
„	10	„	6	6	„
„	10	„	7	6	„

In boring strata of unusual hardness a special arrangement is made, as before stated and the borer is allowed some payment for filling up and for removing tackling.

In Scotland the general prices for boring are as follows: —

			s.	d.	
First	5	fathoms	5	0	per fathom.
Second	5	„	10	0	„
Third	5	„	15	0	„
Fourth	5	„	20	0	„

and so advancing 5*s.* per fathom for each succeeding 5 fathoms.

In boring through very hard strata, the work is done either by shaft-work, or at the following rates, the bore hole being $2\frac{3}{4}$ inches diameter: —

			s.	d.	
First	5	fathoms	10	0	per fathom.
Second	5	„	20	0	„
Third	5	„	30	0	„

The borer usually specifies to have his tackle laid down ready for erecting at the cost of the employer.

As the boring proceeds, it is often necessary to lower pipes into the hole made, to prevent the falling of fragments from the sides of the cylinder. There are many ingenious contrivances for effecting this, which need not be described in this place.

Skill in boring judiciously for coal distinguishes the genuine miner from the empirical adventurer, who, ignorant of the general structure of coal-basins, expends labour, time, and money at random, and usually to no purpose; missing the proper coal-field, and leading his employer to sink a shaft where no productive seams can be had. A skilful coal-viewer, therefore, should always direct the boring operations, especially in an unexplored country.

The boring rods should be made of the best and most tenacious Swedish iron; in area, about an inch and a quarter square. Each rod is usually 3 feet long, terminating in a male screw at one end and a female screw at the other. The boring chisels are commonly 18 inches long, and from $2\frac{1}{2}$ inches to $3\frac{1}{4}$ inches at their cutting edge, which must be tipped with good steel. The chisel is screwed to an intermediate 18-inch rod, called the double-box rod, forming together a rod 3 feet long. There are, moreover, three short rods, a foot, 18 inches, and 2 feet long each, which may be screwed, as occasion requires, to the brace-head, to make the height above the mouth of the bore convenient for the hands of the men in working the rods. Hence the series of rods becomes a scale of measurement for noting the depth of the bore, and keeping a journal of the strata that are perforated. The brace-head rod, also 18 inches long, has two large eyes or rings at its top, set at right angles to each other, through which arms of wood are fixed for the men to lift and turn the rods by, in the boring process.

When the bore is intended to penetrate but a few fathoms, the whole work may be performed directly by the hands; but when the bore is to be of considerable depth, a lofty triangle of wood is set above the bore-hole, with a pulley depending at its summit angle, for conducting the rope to the barrel of a windlass or wheel and axle, secured to

Digitized by Google

the ground with heavy stones. The loose end of the rope is connected to the rods by an oval iron ring, called a runner; and by this mechanism they may be raised and let fall in the boring; or the same effect may be more simply produced by substituting for the wheel and axle a number of ropes attached to the rod-rope, each of which may be pulled by a man, as in raising the ram of the pile-engine.

In all the coal districts there are professional master-borers, who undertake to search for coal, and furnish an accurate register of the strata perforated.

The boring tools employed in the coal districts are represented in the following plan (*fig.* 224):—

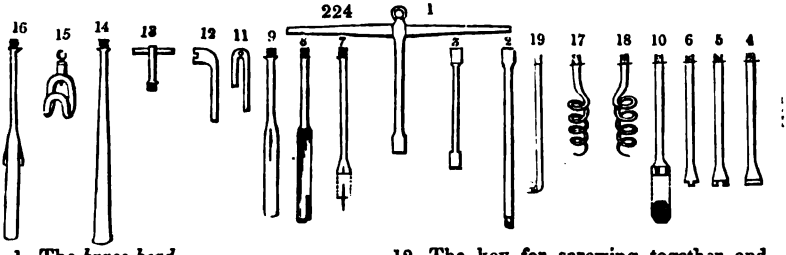

1. The *brace-head.*
2. The common rod.
3. The double-box rod; intermediate piece.
4. The common chisel.
5. The indented chisel.
6. Another of the same.
7. The cross-mouthed chisel.
8. The wimble.
9. The sludger, for bringing up the mud.
10. The rounder.
11. The key for supporting the train of rods at the bore-mouth.
12. The key for screwing together and asunder the rods.
13. The topit, or top piece.
14. The beché, for catching the rod when it breaks in the bore.
15. The runner, for taking hold of the topit.
16. The tongued chisel.
17. The right-handed worm screw.
18. The left-handed ditto.
19. The finger-grip or catch.

We shall now explain the manner of conducting a series of bores in searching ground for coal.

Fig. 225 represents a district of country in which a regular survey has proved the existence and general distribution of coal strata, with a dip to the south, as here

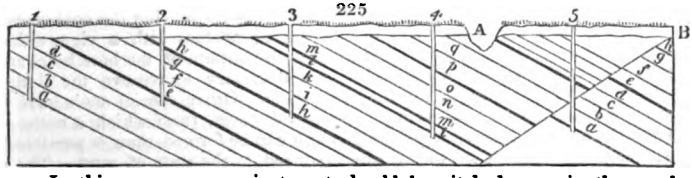

shown. In this case, a convenient spot should be pitched upon in the north part of the district, so that the successive bores put down may advance in the line of the dip. The first bore may therefore be made at No. 1, to the depth of sixty yards. In the progress of this perforation, many diversities and alternations of strata will be probably passed through, as we see in the sections of the strata; each of which, as to quality and thickness, is noted in the journal, and specimens are preserved. This bore is seen to penetrate the strata *d*, *c*, *b*, *a*, without encountering any coal. Now, suppose that the dip of the strata be one yard in ten, the question is, at what distance from bore No. 1, in a south direction, will a second bore of 60 yards strike the first stratum, *d*, of the preceding? The rule obviously is, to multiply the depth of the bore by the dip—that is, 60 by 10—and the product 600 gives the distance required; for, by the rule of three, if 1 yard of depression corresponds to 10 in horizontal length, 60 yards of depression will correspond to 600 in length. Hence the bores marked 1, 2, 3, 4, and 5, are successively distributed as in the figure, the spot where the first is let down being regarded as the point of level to which the summits of all the succeeding bores are referred. Should the top of No. 2 bore be 10 yards higher or lower than the top of No. 1, allowance must be made for this difference in the operation; and hence a surface-level survey is requisite. Sometimes ravines cut down the strata, and advantage should be taken of them, when they are considerable.

In No. 2 a coal is seen to occur near the surface, and another at the bottom of the

Digitized by Google

bore; the latter seam resting on the first stratum *d*, that occurred in bore No. 1; and No. 2 perforation must be continued a little farther, till it has certainly descended to the stratum *d*. Thus these two bores have, together, proved the beds to the depth of 120 yards.

No. 3 bore, being placed according to the preceding rule, will pass through two coal-seams near the surface, and after reaching to nearly its depth of 60 yards, it will touch the stratum *h*, which is the upper stratum of bore No. 2; but since a seam of coal was detected in No. 2, under the stratum *h*, the proof is confirmed by running the borer down through that coal. The field has now been probed to the depth of 180 yards. The fourth bore is next proceeded with, till the two coal-seams met in No. 3 have been penetrated; when a depth of 240 yards has been explored. Hence No. 4 bore could not reach the lower stratum *a*, unless it were sunk 240 yards.

The fifth bore (No. 5) being sunk in like manner, a new coal-seam occurs within a few yards of the surface; but after sinking to the depth at which the coal at the top of the fourth bore was found, an entirely different order of strata will occur. In this dilemma, the bore should be pushed 10 or 20 yards deeper than the 60 yards, to ascertain the alternations of the new range of superposition. It may happen that no coals of any value shall be found, as the figure indicates, in consequence of a slip or dislocation of the strata at B, which has thrown up all the coals registered in the former borings to such an extent that the strata *b*, *a*, of the first bore present themselves immediately on perforating the slip, instead of lying at the depth of 300 yards (5 × 60), as they would have done had no dislocation intervened. Some coal-fields, indeed, are so intersected with slips as to bewilder the most experienced miner, which will particularly happen when a lower coal is thrown upon one side of a slip, directly opposite to an upper coal situated on the other side of it; so that if the two seams be of the same thickness, erroneous conclusions are almost inevitable.

When a line of bores is to be conducted from the dip of the strata towards their outcrop, they should be placed a few yards nearer each other than the rule prescribes, lest the strata last passed through be overstepped, so that they may disappear from the register, and a valuable coal-seam may thereby escape notice. In fact, each successive bore should be so set down, that the first of the strata perforated should be the last passed through in the preceding bore; as is exemplified by viewing the bores in the retrograde direction, Nos. 4, 3, and 2. But if the bore No. 2 had gone no deeper than *f*, and the bore No. 1 been as represented, then the stratum *e*, with its immediately subjacent coal, would have been overstepped, since none of the bores would have touched it; and they would have remained unnoticed in the journal, and unknown.

Modifications required for deep boring.—In cases where it is necessary to carry a bore hole down to a great depth, as for example, in deep artesian wells, or in searching for coal under the new red sandstone or other rocks overlying the coal measures, special modifications are required in the boring apparatus, with a view either to diminish the force of impact of the tool against the bottom of the bore hole, and to save time in withdrawing it when it becomes necessary to remove the sludge or comminuted material produced during the boring. Other special tools have been introduced for the purpose of bringing up solid cores, from which a more exact opinion of the nature of the rock passed through can be formed, than is possible from the inspection of the same substance when reduced to the state of mud. The most essential of these improvements consists in the substitution of a heavy cutting instrument, attached by means of a slide bar and guide frame to the lower end of the boring rods. When the tool rests on the bottom of the hole, at the end of its stroke, a pair of clips at the top of the guide frame take hold of the neck of the tool, so that it is raised with the rods during their up stroke. When the highest point is reached, the clips let go their hold, and the tool falling alone, delivers its blow against the ground, the guide frame and slide bar ensuring a truly perpendicular motion. Several different methods are employed for releasing the tool, but the principal is in all cases similar, namely, that of delivering the blow with a constant force, and independently of the weight due to the increased length of the rods. The above system is known as boring with a free falling cutter, and was introduced in Prussia by Mr. Kind. For very deep bore holes it is customary to substitute wooden rods strengthened with wrought iron, instead of solid iron ones, so that when the bore hole is filled with water, a very considerable part of the dead weight to be moved is balanced off, during the lifting and withdrawal of the rods. Thus, for example, at the deep boring for salt executed at Schöningen, in Brunswick, by Mr. Kind, to a depth of 2,013 feet, the wooden rods employed weighed only 0·94 lbs., about fifteen ounces to the foot, in water, whereas a wrought iron rod would have weighed about 3¼ lbs. per foot, under the same circumstances. In order to expedite the withdrawal and replacement of the tool and rods, before and after the sludge is removed by the shell, it is necessary

Digitized by Google

to build a shed or tower at the surface, of sufficient height to take several lengths of rods joined together, so as to prevent any unnecessary unscrewing or screwing together. The shell (fig. 6, p. 409), is usually raised and lowered by a rope worked by a windlass and brake.

The instrument used for bringing up samples of the rock bored through, consists of four narrow chisels fixed to the ends of two intersecting wrought iron arms attached to the boring rod, which are covered both externally and internally by wrought iron tubes; the cutting is done by percussion, the portion of the ground between the two tubes being reduced to mud by the chisels, while the central portion, equal in diameter to the inner tube, is left untouched. The core is removed by a tool consisting of a tube open at both ends, and fixed to a four-armed crutch similar to that of the cutter; one arm, however, has a band of wrought iron attached to it, so as to form a spring, sufficient space being left between the arm and spring to admit a very taper sliding wedge. When this tool is lowered to within a few inches of the bottom, the core being within the tube, the rod is dropped suddenly when the wedge is driven home against the arm, and the tube, becoming distorted by compression, takes hold of the core, which may then be brought up unbroken. If it is desired to determine the dip of the rock bored through, from the specimen brought up, care must be taken to note the position of the rods, so that in unscrewing them the carrier may always be turned through one or more *entire* revolutions, and not through fractions of a revolution.

A method of boring with hollow rods, combined with a force pump, was introduced about the year 1846 by Mr. Fauvelle, in order to obviate the necessity of using the shell, the detritus produced by the tool being removed continuously by a downward current of water forced by the pump through the interior of the rod, and rising in the annular included space between the exterior of the rod and the lining tube. In spite of the apparent advantages of this method, namely, the maintenance of a clear face of rock for the cutting tool to work on, and the saving of time due to the abolition of the shell, and the adoption of the method of continuous discharge, it does not appear to have come much into use. Recently, however, a modification in which the discharge of the detrition is effected by an upward current of water through the rod, has been employed to advantage in borings for petroleum in Western Canada.

Bore holes of great diameter. Bored shafts.—Of late years several attempts have been made to sink shafts in wet ground, by means of boring tools, but although attended with a certain amount of success, this method has not been adopted to any great extent. The following is a general outline of the method adopted by Mr. Kind for boring a shaft at Stirrigen, in the department of the Moselle. A guide bore of 28 inches diameter was kept three fathoms in advance of the shaft, a hole of 15 feet diameter, for facilitating the collection of the sludge produced. The main boring tool was a long horizontal bar of wrought iron, about 14 feet long, armed with a great number of straight chisels about 5 inches length of cutting edge, which were attached to the rod by one upright bar in the centre, and two diagonal ones at either end. A little below the point of junction of the suspension bars with the rod was fixed a guide, consisting of a transverse wooden bar, terminated at either end by a short sector corresponding to the curvature of the side of the shaft. The weight of the whole of the cutting apparatus was about 3½ tons. In a newer machine used in Belgium, the bar carrying the chisels is made of Krupp's cast steel. The comminuted stuff, produced by the working of the large bore, was collected by a shell of the ordinary pattern, a wrought iron cylinder 14 feet long, and 6 feet diameter, suspended in the lower bore hole, such portion as remained on the floor of the shaft at the end of each spell of boring, being swept down into the shell by a rotary drag or scraper. The borer was worked by a steam engine of 20 horse-power, and the work proceeded at the rate of about 10 inches in 12 hours.

The Chinese method of boring with ropes instead of rigid rods has been tried at different times in Europe, but without any great amount of success, the system of rigid suspension being preferred for working, not only the cutting tool, but also the shell. A very important modification of this principle has, however, been introduced by Messrs. Mather and Platt of Salford, who have succeeded in carrying bores of considerable size (8 or 10 inches in diameter) to depths of 1200 feet and upwards. The whole of the arrangements employed are of a novel and simple character, the rope employed is a flat wire one, similar to those employed for drawing heavy loads in collieries, and is coiled on a drum with projecting horns, worked by a steam engine, so that it can be paid out as the depth increases. The cutting or boring head is attached to the end of the rope, and is actuated by a vertical steam engine, whose piston rod, passing through the top cover, is forked and carries a guide pulley over which the rope passes from the drum before it assumes the vertical position over the bore hole. When the work is commenced, sufficient rope is paid off the drum to allow the tool to touch the ground, when the engine is at the lowest point of its stroke; the rope is then fixed by a clamp screw, interposed between the drum and the

Digitized by Google

guide pulley, on the engine. Steam is admitted below the piston, which rises together with its rod and the top guide pulley, whereby the rope is lifted, and with it the boring tool. In order to prevent the piston from being twisted in its course, the rod is made square, and passes through a stuffing box of a similar form. The arrangement for motion resembles that of the loose pulley of an ordinary block tackle; the length of stroke on the outer side of the rope is double that of the engine. The arrangement of the valves of the engine is similar in principle to those of a single acting steam hammer; when the top of the stroke is reached, the exhaust valve is opened, and the down stroke is made by the gravitating action of the rope and its attached boring head. In order to prevent injurious shocks on the engine, the exhaust port is placed a short distance above the bottom of the cylinder, so that a portion of steam is intercepted by the descending piston, forming an elastic cushion, which stops it in its descent. The boring head is a heavy bar, terminating below in a hollow crown bore, formed of a ring of straight edged chisels curved outwards, and above is a square part which is twisted into a spiral. The link at the end of the rope carries a square frame, corresponding in form to the upper part of the bar, but somewhat shorter, so that it forms a kind of vertical sliding joint. When the engine commences its up stroke, the first effect is to cause the frame at the end of the suspension link to pass over the twisted head of the bar, thereby communicating a partial twist to the rope, which when the whole weight hangs loose tends to straighten itself, and turns the borer by a corresponding amount in the opposite direction. In order that this effect, produced by the twisting of the rope, may be always effective, a system of ratchet wheels is introduced below the top piece, allowing it to turn freely, while the tool is jammed in the ground at the end of the stroke, but preventing the parts from moving separately when the whole is freely suspended. The shell or sludge-pump used in this system of boring, also differs considerably from that generally used; it is, in fact, a complete lifting pump, having a hollow bucket with india-rubber valves working in a tube with foot valves of the ordinary pattern. When in position for lowering, it is suspended by a loop forming the bucket rod, so that the piston is at the top of the stroke. On reaching the bottom, however, it descends by its own weight, and is then worked by the engine drawing on the rope in the same way as an ordinary lifting pump. In this way, the removal of the detritus, one of the most difficult points in rope boring, is satisfactorily effected, and the work proceeds with considerable speed, as no change of suspension is required, as is the case in boring with the rods, the same rope carries both the tool and shell, the winding engine being brought into action by simply releasing the clamp screw, which keeps the rope in position during the period of boring.

Machines for boring and drilling rocks.—Among the most important applications of machinery, for the purposes of mining, is the more or less successful substitution of hand labour in the sinking holes for blasting in rocks, a subject which has received a considerable amount of attention during the past two or three years, both in this country, as well as in the continent of Europe, and in the United States. The method of action of these machines is substantially the same as that of those already described for boring wells and other vertical holes, but the motion of the tool, instead of being dependent on the rods, is produced by steam pressure acting upon a piston moving in a cylinder, which is directly connected with the borer, the cylinder and tool curves being mounted upon a frame provided with jerk screws for fixing it firmly, and positive and appropriate contrivances for the forward feed, and rotation of the cutter.

Sommeillier's machine.—This, the most extensively employed of all rock boring machines, is in use in the drivage of the tunnel on the Franco-Italian Railway, through Mont Cenis, in the Savoy Alps. It consists of a cast iron frame, about 9 feet long, formed of two parallel bars, connected at intervals by transverse pieces, which carries the cylinder, and is capable of being adjusted horizontally, or at any angle to the face of the rock. The cylinder is 2·4 inches in diameter, and is provided with a piston whose rod passes through both cylinder covers, and the front portion ending in a socket which carries the borer, while the hinder one is connected with the valve motion; the two portions of the rod are of different thicknesses, that in front having the largest section; the length of stroke of the piston is about 8 inches. The driving power, air compressed to about 75 lbs. on the square inch, is admitted and exhausted from the cylinder by three passages, two of these near the hinder end, forming exhaust and admission parts, are alternately opened and shut by a slide valve in the ordinary way, while the third, which is in the forward end, is constantly open and in communication with the vessel containing air at the maximum of pressure, so that the force of the forward blow is proportional to the difference of effective area between the two sides of the piston; only 100 lbs. being exerted to draw back the borer, while the blow is struck under an impulse of 240 lbs. A smaller auxiliary engine, attached to the hinder part of the frame, works the slide valve as well as the

Digitized by Google

rotation of the borer, the latter being effected by a ratchet pawl gearing into a wheel with 16 teeth, attached to the back part of the piston rod, one tooth being shifted at each stroke of the valve, so that the cutting edge of the borer makes one complete revolution in every sixteen blows. The feed, or forward motion of the cylinder as the hole deepens, is effected by a screw or worm wheel on the back piston rod, which gears into segments of a corresponding hollow or female screw formed in the long sides of the frame. As it is necessary, however, that this motion should be intermittent and dependent only on the progress of the work, the worm wheel is placed loose on the piston rod, and is only brought into action by a spring, which, in its turn, is kept back by a sliding rod provided with a detent which locks into the teeth of a rack placed below the frame. When the borer no longer reaches the face of the rock, a tappet on the piston rod releases the detent on the rod, whereby the worm wheel is pressed home against its bearing on the piston rod, and the cylinder is carried forward until the detent falls into the next tooth of the rack, and the machine is locked fast, having travelled through a distance of 1·4 inches, the length of stroke of the piston being reduced by the same amount, until the hole has been deepened by a corresponding quantity. The comminuted rock produced during the boring, is continuously removed by a jet of water, which is squirted into the hole under a pressure of 75 lbs. to the square inch. This precaution is found to be productive of great economy in the wear of the tools, as two holes can now be bored with the same borer, whereas formerly two or three drills were worn out in a single hole. Three different borers are employed for each hole, varying in length from 20 inches to 6½ feet, the distance through which the machine is capable of travelling on its bed plate is about 32 inches. Under ordinary conditions, the working speed is about 200 strokes per minute, at which rate from 8 to 10 holes of 1·6 inches diameter, and 35 inches deep can be bored in the shift of six hours. The tunnel is of an ⌂ shaped section, 13 feet broad and 9¾ feet high; 8 machines are employed at one time, they are mounted on a wrought iron frame, weighing about 15 tons, which travels on a railway, and can be removed to a safe distance when the blasting takes place. From 65 to 70 holes are bored in the face of the rock, and then loaded with uniform charges, made up into cartridges, are primed with fuses of different lengths, so as to explode in groups at definite intervals; a horizontal series at about mid-height is first fired, then follow two vertical side rows, then a group near the crown of the arch, and finally a horizontal series near the floor. In this way, the rock is blown down in nearly uniform fragments, of from 6 to 8 inches in the side. The work advances from 10 inches to 13 feet per day, according to the hardness of the rock.

Schumann's machine, which has been tried in the Saxon mines, is somewhat similar to that of Sommeillier, but is more direct in the valve motion, the slide being driven by gearing wheels connected with the piston rod, instead of employing an auxiliary engine; the feed motion is, however, less perfect, and is not self-acting. Another difference consists in the substitution of a worm wheel and screw for the ratchet motion employed in rotating the bores. Under the small pressure of 30 lbs. per square inch, this machine bored at the rate of 18 inches in 19 minutes.

Crease's machine, like Sommeillier's, has two cylinders, but they are placed side by side, and connected by passages so arranged that the pistons, of which there are two to each cylinder, act alternately as valves to each other. The feed or forward motion of the borer is effected by connecting the feed screw to the spindle at the back of the main cylinder, by fixing on the screw a ratchet wheel with lever and pawl, working loose on the same, or by connecting this lever with an eccentric fixed on the spindle. The feed may be varied at pleasure by altering the distance from the centre of the ratchet wheel and feed screw, at which the lever is connected to the eccentric.

Gwynne's boring machine.—This machine, which is used in driving the Hoosack tunnel, in New Hampshire, is distinguishable from those already noticed, by having a tubular piston rod, so arranged that the boring tool, or drill, can be drawn out and replaced from behind, without in any way altering the position of the machine or its framing, when at work. The cylinder is suspended in its frame by an universal joint, consisting of a pair of trunnions mounted on cylindrical bearings, giving a vertical motion, which, in their turn, are provided with slides, forming circular segments, which travel in beds of a corresponding form, attached to the upright of the frame. By means of this arrangement, the cylinder can be adjusted at any angle of elevation, and within a considerable angle laterally, but there is no forward motion, the advancing depth of the hole being met by the use of longer drills, up to a length of 4½ feet, which is the greatest depth of hole that can be bored. The driving power employed is steam of 120 lbs. pressure to the square inch, a maximum speed of 1200 strokes per minute having been attained experimentally. As in Sommeillier's machine, a stream of water from a small force pump is employed to wash the detritus continuously out of the bore hole.

Digitized by Google

Leschot's rock drilling machine.—The whole of the preceding examples of boring machines are contrived in imitation of the process of hand boring, the borer or drill acting by percussive impact against the face of the rock, and producing a volume of powdered rock equal to the solid contents of the bore hole. A machine has, however, been recently introduced by Mr. Leschot, of Geneva, in which the cutting tool is of a tubular form, and receives an uniform rotating motion, the result being the production of an annular groove with a solid cylindrical core corresponding to the hollow of the tube, which, when broken out, gives a bore hole of the proper size, while the amount of rock pulverised is only equal to the solid contents of the tubular cutter. The general principles of the construction of this machine are as follows. The cutter is a short wrought iron tube of $1\frac{1}{2}$ inches diameter, and about $\frac{1}{4}$ inch thick, carrying at one end a series of fragments of Brazilian black diamond, such as are used by lapidaries for cutting diamonds, rubies, and other gems. These fragments are placed at intervals of about $\frac{1}{8}$ of an inch apart, both inside and outside the tube, the projection above the surface of the metal being not more than $\frac{1}{50}$th of an inch. The cutter is attached by a bayonet clutch to a hollow wrought iron tube, carried in a wrought iron frame, having a long screw cut on the opposite end, which travels in a nut carried in a collar in the hinder part of the frame. A horizontal shaft, which receives motion from the driving wheel by means of a pair of bevel wheels, is fixed parallel to the boring tube, it carries two spur wheels, one of which gears into a similar wheel, fixed about midway between the forward end of the feed screw, and the front of the frame, while the other is in connection with the nut. These wheels are not of uniform diameters, and are arranged in pairs, so as to produce a slight difference in speed between the tube and the nut, the cutting end of the tube being carried forward with a slow grinding action, due to the differential motion so produced. The hole is cleaned by a jet of water which is brought through a flexible hose attached to the back of the boring tube by a swivel joint, in order that it may not be twisted by the rotation of the latter. A machine worked by the extreme power of two men, at 30 revolutions per minute, bored holes in granite $1\frac{1}{4}$ inches diameter, at the rate of from 9 to 10 inches per hour. The amount of rock pulverised was equal to rather less than one half of the solid contents of the finished bore hole. The continually increasing price of the diamonds forming the cutters, will probably prevent this ingenious machine coming into extensive use; the wear is, however, said to be very small. A boring head of the dimensions given above, costs from 5*l.* to 6*l.*, and when the points are worn down, they are still available for lapidaries' use.

BORON. One of the non-metallic elements; it exists in nature in the form of boracic acid, and as borax, tincal, &c.

Homberg is said to have obtained boron from borax in 1702; if so, his discovery appears to have been forgotten, since it was unknown, except hypothetically, to the more modern chemists until, in 1808, it was obtained by Gay-Lussac and Thénard, and by Davy in 1808, who decomposed boracic acid into boron and oxygen.

Boron is best obtained by preparing the double fluoride of boron and potassium ($3KF\ 2BF^3$), by saturating hydrofluoric acid with boracic acid, and then gradually adding fluoride of potassium. The difficultly soluble double compound thus produced is collected and dried at a temperature nearly approaching to redness. This compound is then powdered and introduced into an iron tube closed at one end, together with an equal weight of potassium, whereupon heat is applied sufficient to melt the latter, and the mixture of the two substances is effected by stirring with an iron wire. Upon the mass being exposed to a red heat, the potassium abstracts the fluorine. The fluoride of potassium may afterwards be removed by heating the mass with a solution of chloride of ammonium, which converts the free potassa into chloride of potassium, and thus prevents the oxidation of the boron, which takes place in the presence of fixed alkali; the chloride of ammonium adhering to the boron may be afterwards removed by treatment with alcohol. Boron is a dark greenish-brown powder, tasteless, and inodorous; its chemical equivalent is 11·0. See GRAPHITOIDAL and DIAMOND BORON.—*Watts' Dictionary of Chemistry.*

BOTTLE MANUFACTURE. See GLASS and STONE WARE.

BOUGIE. A smooth, flexible, elastic, slender cylinder, introduced into the urethra, rectum, or œsophagus, for opening or dilating it, in cases of stricture and other diseases. The invention of this instrument is claimed by Aldereto, a Portuguese physician; but its form and uses were first described by his pupil Amatus, in the year 1554. Some are solid and some hollow, some corrosive and some mollifying. They owed their elasticity, as formerly made, to linseed oil, inspissated by long boiling, and rendered dry by litharge. This viscid matter was spread upon a very fine cord or tubular web of cotton, flax, or silk, which was rolled upon a slab, when it became nearly solid by drying, and was finally polished.

Pickel, a French professor of medicine, published the following recipe for the com-

Digitized by Google

position of bougies. Take 3 parts of boiled linseed oil, 1 part of amber, and 1 of oil of turpentine; melt and mix these ingredients well together, and spread the compound at 3 successive intervals upon a silk cord or web. Place the pieces so coated in a stove heated to 150 F.; leave them in it for 12 hours, adding 15 or 16 fresh layers in succession, till the instruments have acquired the proper size. Polish them first with pumice-stone, and finally smooth with tripoli and oil. This process is the one still employed in Paris, with some slight modifications; the chief of which is dissolving in the oil one-twentieth of its weight of caoutchouc, to render the substance more solid. For this purpose the caoutchouc must be cut into slender shreds, and added gradually to the hot oil. The silk tissue must be fine and open, to admit of the composition entering freely among its filaments. Every successive layer ought to be dried in a stove, and then in the open air, before another is applied. This process takes 2 months for its completion, in forming the best bougies called by distinction *elastic bougies;* which ought to bear twisting round the finger without cracking or scaling, and extension without giving way, but retracting when let go. When the bougies are to be hollow, a mandrel of iron wire, properly bent, with a ring at one end, is introduced into the axis of the silk tissue. Some bougies are made with a hollow axis of tinfoil rolled into a slender tube. Bougies are now usually made entirely of caoutchouc, by the intervention of a solution of this substance in sulphuric ether, a menstrum sufficiently cheap in France, on account of the low duty upon alcohol, or of naphtha. There are medicated bougies, the composition of which belongs to surgical pharmacy. The manufacture of these instruments of various kinds forms a separate and no inconsiderable branch of industry at Paris. Very superior bougies are now made by the surgical-instrument makers, and by the workers in caoutchouc, in this country.

BOULDER CLAY. In commercial language, the fine laminated clays of the Pleistocene epoch, which immediately overlie the true *Boulder clay* of geologists—so called from the boulders and pebbles interspersed through their mass.

BOULDERING STONE. A name given by the Sheffield cutlers to the smooth flint pebbles with which they smooth down the faces of buff and wooden wheels.

BOURNONITE. A sulphide of antimony, lead, and copper. According to Rammelsbery, sulphur 19·76, antimony 24·34, lead 42·88, copper 13·06. It is found in several parts of Cornwall and Devonshire, and in most of the mining districts of Europe.

BOVEY COAL. See LIGNITE.

BOX WOOD. (*Buis*, Fr.; *Buchsbaum*, Germ.) *Buxus sempervirens.*—Two varieties of box wood are imported into this country. The European is brought from Leghorn, Portugal, &c.; and the Turkey box wood from Constantinople, Smyrna, and the Black sea. English box wood grows plentifully at Box Hill, in Surrey, and in Gloucestershire. The English box wood is used for common turnery, and is preferred by brass finishers for their lathe-chucks, as it is tougher than the foreign box, and bears rougher usage. It is of very slow growth, as in the space of 25 years it will only attain a diameter of 1½ to 2 inches. Box wood is used for making clarionets and flutes, carpenters' rules, and drawing scales, and is exclusively employed by the wood engraver. Its sawdust is used for cleaning jewellery. See ENGRAVING ON WOOD.

BRACES (*Bretelles*, Fr.; *Hosenträger*, Germ.) Narrow fillets or bands of leather or textile fabrics, which pass over the shoulders, and are attached behind and before to the waistbands of trousers, for supporting their weight. Braces are now made of an elastic material, into the structure of which Indian-rubber fibre enters.

BRAID. A plaited, twisted or woven trimming.

BRAIDING MACHINE (*Machine à lacets*, Fr.; *Bortenwirkerstuhl*, Germ.) This being employed, not only to manufacture stay-laces, braid, and upholsterers' cord, but to cover the threads of caoutchouc for weaving brace-bands, deserves a description in this work. Three threads at least are required to make such a knitted lace, but 11, 13, or 17, and even 29 threads are often employed, the first three numbers being preferred. They are made by means of a frame of a very ingenious construction which moves by a continuous rotation. We shall describe a frame with 13 threads, from which the structure of the others may be readily conceived. The basis of the machine consists of four strong wooden uprights, A, *fig.* 226, 227, 228, occupying the four angles of a rectangle, of which one side is 14 inches long, the other side 18 inches, and the height of the rectangle about 40 inches. *Fig.* 226 is a section in a horizontal plane, passing through the line *a b* of *fig.* 227, which is a vertical section in a plane passing through the centre of the machine C, according to the line *c d*, *fig.* 226. The side X is supposed to be the front of the frame; and the opposite side, Y, the back. B, six spindles or skewers, numbered from 1 to 6, placed in a vertical position upon the circumference of a circle whose centre coincides with that of the machine at the point C. These six spindles are composed—1, Of so many iron shafts or axes D, supported in brass collets E (*fig.* 227), and extended downwards within 6 inches of the ground, where they rest in brass steps fixed upon a horizontal beam. 2, Wooden heads, made of horn-beam

Digitized by Google

or nut-tree, placed, the first upon the upper end of each spindle, opposite the cut-out beam F, and the second opposite the second beam G. 3, Wooden-toothed wheels, H,

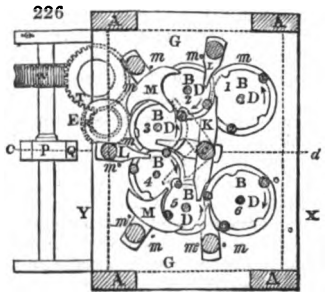

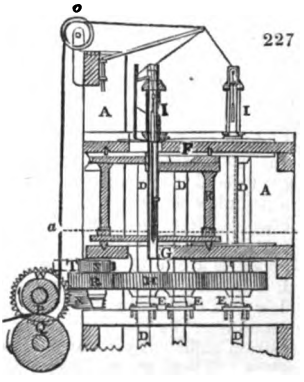

reciprocally working together, placed between the beam G and the collet-beam E. The toothed wheels and the lower heads for each spindle are in one piece.

The heads and shafts of the spindles No. 1 and 6 are one-fifth stronger than those of the other spindles; their heads have five semi-circular grooves, and wheels of 60 teeth, while the heads of the others have only four grooves, and wheels of 48 teeth; so that the number of the grooves in the six spindles is 26, one-half of which are occupied with the stems of the puppets I, which carry the 13 threads from No. 1 to 13.

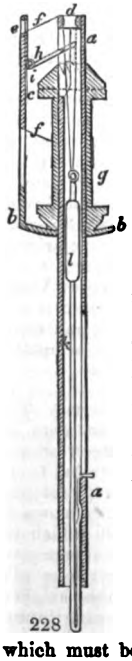

The toothed wheels, which give all the spindles a simultaneous movement, but in different directions, are so disposed as to bring their grooves opposite to each other in the course of rotation.

K, the middle winglet, triple at bottom and quintuple at top, which serves to guide the puppets in the direction they ought to pursue.

L, three winglets, single at top and bottom, placed exteriorly, which serve a like purpose.

M, two winglets, triple at bottom and single at top, placed likewise exteriorly, and which serve the same purposes as the preceding; *m*, are iron pins inserted in the cut-out beam G, which serve as stops or limits to the oscillations of the exterior winglets.

Now, if by any moving power (a man can drive a pair) rotation be impressed upon the large spindle No. 1, in the direction of the arrow, all the other spindles will necessarily pursue the rotatory movement indicated by the respective arrows. In this case the 13 puppets working in the groves of the heads of the spindles will be carried round simultaneously, and will proceed, each in its turn, from one extremity of the machine to the opposite point, crossing those which have a retrograde movement. The 13 threads united at the point N, situated above the centre of the machine, will form at that point the braid, which after having passed over the pulley *o*, comes between the two rollers P Q, and is squeezed together, as in a flatting-mill, where the braid is calendered at the same time that it is delivered. It is obvious that the roller P, receives its motion from the toothed wheel of the spindle No. 3, and from the intermediate wheels, R, S, T, as well as from the endless screw *z*, which drives at proper speed the wheel W, fixed upon the shaft of the roller P.

The braid is denser in proportion as the point N is less elevated above the tops of the puppets, but in this case, the excentric motion of these puppets is much more sensible in reference to that point towards which all the threads converge than when it is elevated. The threads, which must be always kept equally stretched by means of a weight, as we shall presently see, are considerably strained by the traction occasioned by the constantly excentric movement of the puppets. From this cause, braiding machines must be worked at a moderate velocity. In general, for fine work, 30 turns of the large spindle per minute are the utmost that can safely be made.

The puppet or spindle of this machine, being the most important piece, I have represented it in section, upon a scale one-fourth of its actual size, *fig.* 228. It is formed of a tube, *a*, of strong sheet iron well brazed; *b* is a disc, likewise of sheet iron, from which a narrow fillet, *c*, rises vertically as high as the tube, where both

Digitized by Google

are pierced with holes, *d e*, through which the thread *f* is passed, as it comes from the bobbin, *g*, which turns freely upon the tube *a*. The top of this bobbin is conical and toothed. A small catch or detent, *h*, movable in a vertical direction round *i*, falls by its own weight into the teeth of the crown of the bobbin, in which case this cannot revolve; but when the detent is raised so far as to disengage the teeth, and at the same time to pull the thread, the bobbin turns, and lets out thread till the detent falls back into these same teeth.

A skewer of iron wire, *k*, is loaded with a small weight, *l*, melted upon it. The top of this skewer has an eye in it, and the bottom is recurved, as is shown in *fig.* 228, so that supposing the thread comes to break, this skewer falls into the actual position in the figure, where we see its lower end extending beyond the tube *a*, by about ¼ of an inch; but as long as the thread is unbroken, the skewer *k*, which serves to keep it always tense during the excentric movement of the puppet, does not pass out below the tube.

This disposition has naturally furnished the means of causing the machine to stop whenever one of the threads breaks. This inferior protrusion of the skewer pushes in its progress a detent, which instantly causes the band to slide from the driving pulley to the loose pulley. Thus the machine cannot operate unless all the threads be entire. It is the business of the operative, who has 3 or 4 under her charge, to mend the threads as they break, and to substitute full bobbins for empty ones, whenever the machine is stopped.

BRAHMIN'S BEADS. The seeds of a species of *Elæocarpus*, which are capped with silver and made into necklaces and bracelets.

BRAN. (*Son*, Fr.; *Kleie*, Germ.) The husky portion of ground wheat, separated by the boulter from the flour. It is advantageously employed by the calico printers, in the clearing process, in which, by boiling in bran-water, the colouring matters adhering to the non-mordanted parts of maddered goods, as well as the dun matters which cloud the mordanted portions, are removed. A valuable series of researches by M. Daniel Kœchlin-Schouch, justified the following conclusions:—

1. The dose of 2 bushels of bran for 10 pieces of calico is the best, the ebullition being kept up for an hour. A boil for the same time in pure water had no effect in clearing either the grounds or the figures.

2. Fifteen minutes' boiling are sufficient when the principal object is to clear white grounds, but in certain cases 30 minutes are requisite to brighten the dyed parts. If, by increasing the charge of bran, the time of the ebullition could be shortened, it would be, in some places, as Alsace, an economy; because in the passage of the 10 pieces through a copper or vat heated with steam, 1 cwt. of coal is consumed in fuel, which costs from 2½ to 3 francs, while 2 bushels of bran are to be bought for 1 franc.

3. By increasing the quantity of water from 12 to 24 hectolitres with 2 bushels of bran, the clearing effect upon the 10 pieces was impaired. It is therefore advantageous not to use too much water.

4. Many experiments concur to prove that flour is altogether useless for the clearing boil, and that finer bran is inferior for this purpose to the coarser.

5. The white ground of the calicoes boiled with wheat bran is distinguishable by its superior brightness from that of those boiled with rye bran, and especially with barley bran; the latter having hardly any effect.

6. There is no advantage in adding soap to the bran boil; though a little potash or soda may be properly introduced when the water is calcareous.

7. The pellicle of the bran is the most powerful part; the flour and the starch are of no use in clearing goods, but the mucilage, which forms one-third of the weight of the bran, has considerable efficacy, and seems to act in the following way. In proportion as the mucilaginous substance dissolves the colouring and tawny matters upon the cloth, the husky surface attracts and fixes upon itself the greater part of them. Accordingly, when used bran is digested in a weak alkaline bath, it gives up the colour which it had absorbed from the cloth.

From bran, Péligot obtained 8·0 per cent. of cellulose. Millon succeeded in extracting considerable quantities of glutinous substances from the bran with acetic acid and alcohol. He found in 100 parts, starch, dextrine, and sugar, 50·0; sugar, 1·0; gluten, 14·9; fat, 3·6; cellulose, 9·7; salts, 5·7; water, 13·9; and of odorous and resinous matters, 1·2 per cent.

BRANDS. Imperfectly carbonised pieces of wood taken from a charcoal heap.

BRANDY. (*Eau de Vie*, Fr.; *Branntwein*, Germ.) The name given in this country to ardent spirits distilled from wine, and possessing a peculiar taste and flavour, due to a minute portion of a volatile oil. Each variety of alcohol has an aroma characteristic of the fermented substance from which it is procured; whether it be the grape, cherries, sugar-cane, rice, corn, or potatoes; and it may be distinguished even as procured from different growths of the vine. The brandies of

Digitized by Google

Languedoc, Bordeaux, Armagnac, Cognac, Aunis, Saintonge, Rochelle, Orleans, Barcelona, Naples, &c., being each readily recognisable by an experienced dealer.

Aubergier showed, by experiments, that the disagreeable taste of the spirits distilled from the *marc* of the grape is owing to an essential oil contained in the skin of the grape; and found that the oil, when insulated, is so energetic that a few drops are sufficient to taint a pipe of 600 litres of fine-flavoured spirit. See FUSEL OIL.

The most celebrated of the French brandies, those of Cognac and Armagnac, are slightly rectified to only from 0·935 to 0·922: they contain more than half their weight of water, and come over therefore highly charged with the fragrant essential oil of the husk of the grape. When, to save expense of carriage, the spirit is rectified to a much higher degree, the dealer, on receiving it at Paris, reduces it to the market proof by the addition of a little highly-flavoured weak brandy-and-water; but he cannot in this way produce so finely-flavoured a spirit as the weaker product of distillation of the Cognac wine. If the best Cognac brandy be carefully distilled at a low heat, and after distillation the strong spirit be diluted with water to restore it to its original strength, it will be found that the brandy has suffered much in its flavour.

Genuine French brandy evinces an acid reaction with litmus paper, owing to a minute portion of vinegar; it contains, besides, some acetic ether, and, when long kept in oak casks, a little astringent matter.

The constituents of brandy are *alcohol*, *water*, *volatile oil*, *acetic acid*, *acetic ether*, *colouring matter*, and *tannin*.—*Pereira*.

Pale brandy acquires the slight colour which it possesses from the cask in which it is kept. *Brown brandy* is coloured by *caramel*. Brandy is sold of various strengths, but it is usually about 10 per cent. under proof. The quantities of brandy imported since 1860, and its computed value, have been as follows:—

	1860	1861	1862	1863	1864
Gallons - - - - -	2,342,543	2,097,934	2,375,835	3,132,293	4,907,770
Computed real value	£1,088,177	£930,538	£1,031,182	£1,124,824	£1,505,382
Average price (exclusive of duty	9*s.* 6½*d.*	9*s.* 1*d.*	9*s.* 1*d.*	7*s.* 6½*d.*	

The duty on brandy was reduced in 1860 to 8*s.* 6*d.* per gallon.

BRANDY, BRITISH. Dr. Ure gave the following formulæ for its preparation:—Dilute pure alcohol to the proof pitch; add to every hundred pounds weight of it from half a pound to a pound of argol, dissolved in water, a little acetic ether, and French wine vinegar, some bruised French plums, and flavour stuff from Cognac; then distil the spirit with a gentle fire in an alembic furnished with an agitator. British brandies are now sold as pure grain spirits, flavoured and coloured with caramel. See ALCOHOL.

BRASS. (*Laiton*, *cuivre jaune*, Fr.; *Messing*, Germ.) An alloy of copper and zinc. The brass of the ancients appears, in very early times, to have chiefly consisted of a mixture of copper and tin, and to have, consequently, been a species of bronze or bell metal. See ALLOYS.

Brass was formerly manufactured by cementing granulated copper, called *bean-shot*, or copper clippings, with calcined calamine (native carbonate of zinc) and charcoal in a crucible, and exposing them to bright ignition. Three parts of copper were used for 3 of calamine and 2 of charcoal. James Emerson obtained a patent, in 1781, for making brass by the direct fusion of its two metallic elements, and it is now usually manufactured in this way.

It appears that the best proportion of the constituents to form fine brass is 2 equivalents of copper = 63½ + 1 of zinc = 32·3; or very nearly 2 parts copper to 1 of zinc.

In the process of alloying two metals of such different fusibilities as copper and zinc, a considerable waste of the latter metal by combustion might be expected; but, in reality, their mutual affinities seem to prevent the loss, in a great measure, by the speedy absorption of the zinc into the substance of the copper. Indeed, copper plates and rods are often *brassed* externally by exposure, at a high temperature, to the fumes of zinc, and afterwards laminated or drawn. The spurious gold wire of Lyons is made from such rods. Copper vessels may be superficially converted into brass by boiling them in dilute muriatic acid containing some tartar and zinc amalgam.

The first step in making brass is to plunge slips of copper into melted zinc till an alloy of somewhat difficult fusion be formed, to raise the heat, and add the remaining proportion of the copper.

The brass of the first fusion is broken to pieces, and melted with a fresh quantity of zinc, to obtain the finished brass. Each melting takes from 8 to 9 hours. The metal is now cast into plates, about 40 inches long by 26 broad, and from one-third to half an inch thick. The moulds are, in this case, slabs of granite mounted in an iron frame. Granite appears to be preferred as a mould, because it preserves the

Digitized by Google

heat, whilst, by the asperities of its surface, it keeps hold of the clay lute applied to secure the joinings.

The cast plates are usually rolled into sheets. For this purpose they are cut into ribands of various breadths, commonly about 6½ inches. The cylinders of the brass rolling mill are generally 46 inches long, and 18 inches in diameter. The ribands are first of all passed through the cylinders cold; but the brass soon becomes too hard to laminate. It is then annealed in a furnace, and, after cooling, is passed afresh through the rolls. After paring off the chipped edges, the sheets are laminated two at a time; and if they are to be made very thin, even 8 plates are to passed through together. The brass in these operations must be annealed 7 or 8 times before the sheet arrives at the required thickness. These successive heatings are expensive; and hence manufacturers have been led to try various plans of economy. The annealing furnaces are of two forms, according to the size of the sheets of brass. The smaller are about 12 feet long, with a fire-place at each end, and about 13 inches wide. The arch of the furnace has a cylindrical shape, whose axis is parallel to its small side. The hearth is horizontal, and is made of bricks set on edge. In the front of the furnace there is a large door, which is raised by a lever, or chain and counterweight, and slides in a frame between two cheeks of cast iron. This furnace has, in general, no chimney, except a vent slightly raised above the door, to prevent the workmen being incommoded by the smoke. Sometimes the arch is perforated with a number of holes. The sheets of brass are placed above each other, but separated by parings, to allow the hot air to circulate among them, the lowest sheet resting upon bars of cast iron placed lengthwise.

The larger furnaces are usually 32 feet long, by 6½ feet wide, in the body, and 3 feet at the hearth. A grate 13 inches broad extends along each side of the hearth, through its whole length, and is divided from it by a small wall, 2 or 3 inches high. The vault of the furnace has a curvature, and is pierced with 6 or 8 openings, which allow the smoke to pass off into a low bell-chimney above. At each end of the furnace is a cast-iron door, which slides up and down in an iron frame, and is poised by a counterweight. On the hearth is a kind of railway, composed of two iron bars, on which the carriage moves with its load of sheets of brass.

These sheets, being often 24 feet long, could not be easily moved in and out of the furnace; but as brass laminates well in the cold state, they are all introduced and moved out together. With this view an iron carriage is framed with bars, which rest on four wheels. Upon this carriage, of a length nearly equal to that of the furnace, are laid the sheets, with brass parings between them. The carriage is then raised by a crane to a level with the furnace, and entered upon the grooved bars which lie upon the hearth. That no heat may be lost, two carriages are provided, the one being ready to put in as the other is taken out; the furnace is meanwhile uniformly kept hot. This method, however convenient for moving the sheets in and out, wastes a good deal of fuel in heating the iron carriage.

The principal places in which brass is manufactured on a large scale, in England, are Bristol and Birmingham, and at Holywell, in North Wales.

At the brass manufactory of Hegermaül, upon the Finon Canal, near Potsdam, the following are the materials of one charge: 41 pounds of old brass, 55 pounds refined copper (*Gaarkupfer*) granulated, and 24 pounds of zinc. This mixture, weighing 120 pounds, is distributed in four crucibles, and fused in a wind furnace with pitcoal fuel. The waste, upon the whole, varies from 2½ to 4 pounds.

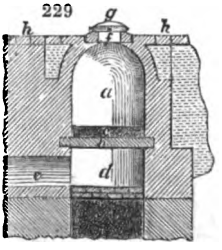

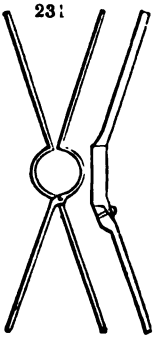

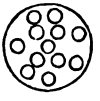

Fig. 229 represents the furnace as it was formerly worked with charcoal; *a*, the laboratory, in which the crucibles were placed. It was walled with fire bricks. The foundations and the filling-in walls were formed of stone rubbish, as being bad conductors of heat; sand and ashes may be also used; *b*, cast-iron circular grating plates, pierced with 12 holes (see *fig.* 230), over them a sole of loam, *c*, is beaten down, and perforated with holes corresponding to those in the iron discs; *d*, the ash-pit; *e*, the *bock*, a draught flue which conducts the air requisite to the combustion, from a sunk tunnel in communication with several melting furnaces. The terrace or crown of the furnace, *f*, lies on a level with the foundry floor, *h h*, and is shut with a tile of fire-clay, *g*, which

Digitized by Google

may be moved in any direction by means of hooks and eyes in its binding iron ring. *Fig.* 231 the tongs for putting in and taking out the charges, as viewed from above and from the side.

The following description of a continental brass manufactory, well described by Dr. Ure, it has been thought advisable to retain, with only a few verbal alterations.

Figs. 232, 233 represent the furnaces more recently constructed for the use of pitcoal fuel; *fig.* 232 being an upright section, and *fig.* 233 the ground plan. In this furnace the crucibles are not surrounded with the fuel, but receive the requisite melting heat from the flame proceeding from the grate upon which it is burnt. The crucibles stand upon seven arches *a*, which unite in the middle at the key-stone, *b*, *fig.* 233; between the arches are spaces through which the flame rises from the grate, *c*; *d*, is the fire door; *e*, a sliding tile or damper for regulating or shutting off the air-draught; *f* an inclined plane, for carrying off the cinders that fall through the grate, along the draught tunnel *g*, so that the air in entering below may not be heated by them.

232 233

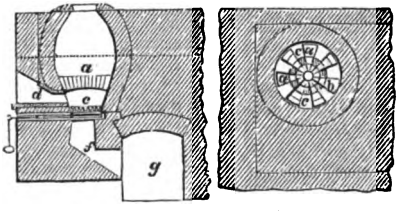

The crucibles are 16 inches deep, 9½ wide at the mouth, 6½ at the bottom; with a thickness in the sides of 1 inch above and 1½ below; they stand from 40 to 50 meltings. The old brass, which fills their whole capacity, is first put in and melted down; the crucibles are now taken out and charged with the half of the zinc in pieces of from 1 to 3 cubic inches in size, covered over with coal ashes; then one-half of the copper charge is introduced; again dust; and thus the layers of zinc and copper are distributed alternately with coal-ashes betwixt them, till the whole charge becomes finally fused. Over all, a thicker layer of carbonaceous matter is laid, to prevent oxidation of the brass. Eight crucibles filled in this way are put into the furnace between the 12 holes of the grate; and over them are laid two empty crucibles to be heated for the casting operation. In from 3½ to 4 hours the brass is ready to be poured. Fifteen English bushels of coals are consumed in one operation; of which six are used at the introduction of the crucibles, and four gradually afterwards.

When sheet brass is to be made, the following process is pursued:—

An empty crucible is taken out of the furnace through the crown with a pair of tongs, and kept red hot by placing it in a hollow hearth surrounded with burning coals; into this crucible the contents of four of the melting pots are poured; the dross is raked out with an iron scraper. As soon as the melting pot is emptied, it is immediately re-charged in the manner above described, and placed in the furnace. The surface of the melted brass is swept with the stump of a broom, and then stirred about with the iron rake, to bring up any light foreign matter to the surface, which is then skimmed with a little scraper; the crucible is now seized with the casting tongs, and emptied in the following way:—

The mould or *form* for casting sheet brass consists of two slabs of granite, *a a*, *figs.* 234, 235. These are 5½ feet long, 3 feet broad, 1 foot thick, and, for greater security,

234

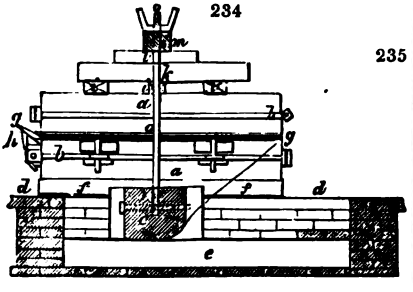

235

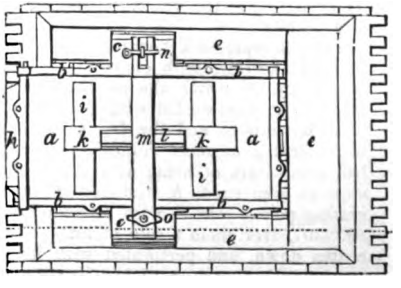

girt with iron bands, *b b*, 2 inches broad, 1½ thick, and joined at the four corners with bolts and nuts. The mould rests upon an oaken block, *c*, 3½ feet long, 2½ broad, and 1¼ thick, which is suspended at each end upon gudgeons, in bearing blocks, placed under the foundry floor, *d d*, in the casting pit, *e e*. This is lined with bricks; and is 6¾ feet long, 5½ broad, and 2 deep; upon the two long side walls of the pit are laid the bearing blocks which support the gudgeons. The swing blocks are 10 inches long, 18 inches broad, 15 inches thick, and somewhat rounded upon their back edge.

Digitized by Google

so that the casting frame may slope a little to the horizon. To these blocks two cross wooden arms, *f f*, are mortised, upon which the under slab rests freely, but so as to project about 5 inches over the block backwards, to secure an equipoise in the act of casting. *g g* are bars, placed at both of the long sides, and one of the ends, between the slabs, to determine the thickness of the brass-plate. Upon the other slab the gate *h* is fastened, a sheet of iron 6 inches broad, which has nearly the shape of a parallel trapezium (lozenge), and slopes a little towards the horizon. This serves for setting the casting pot upon in the act of pouring, and renders it more convenient to empty. The gate is coated with a mixture of loam and hair. The upper slab is secured to the under one in its slanting position by an *armour* or binding. This consists of tension bars of wood, *i*, *k*, *l*, *m*, of the iron bars *n*, (3 to 3½ inches broad, 1½ inch thick, see the top view, *fig.* 235) of a rod with holes and pins at its upper end, and of the iron screw spindle *o*. The mode in which these act may be understood from inspection of the figure. In order to lift the upper slab from the under one, which is effected by turning it round its edge, a chain is employed, suspending two others, connected with the slab. The former passes over a pulley, and may be pulled up and down by means of a wheel and axle, or the aid of a counterweight. Upon each of the two long sides of the slab are two iron rings, to which the ends of the chains may be hooked. The casting faces of the slab must be coated with a layer of finely ground loam; the thinner this is the better.

When calamine is employed, ½ cwt. of copper, ¾ cwt. of calamine, and ⅓rd the volume of both of charcoal mixed, are put into seven crucibles, and exposed to heat during 11 or 12 hours; the product being from 70 to 72 lbs. of brass.

Brass-Plate Rolling.—At Hegermühl there are two re-heating or annealing furnaces, one larger, 18 feet long, and another smaller, 8½; the hot chamber is separated from the fireplace by iron beams, in such a way that the brass castings are played upon by the flames on both their sides. After each passage through the laminating rolls, they are heated anew, then cooled and laminated, until they have reached the proper length. The plates are smeared with grease before rolling.

Fig. 236 shows the ground plan of the furnace and its railway; *fig.* 237, the cross section; and *fig.* 238, the section lengthwise; *a a*, the iron way bars or rails upon

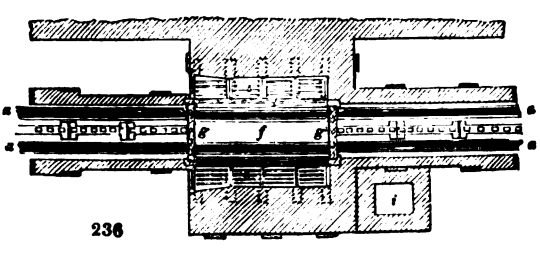

236

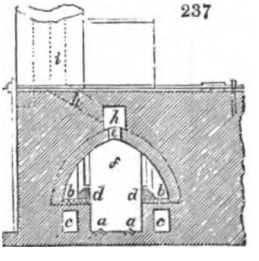

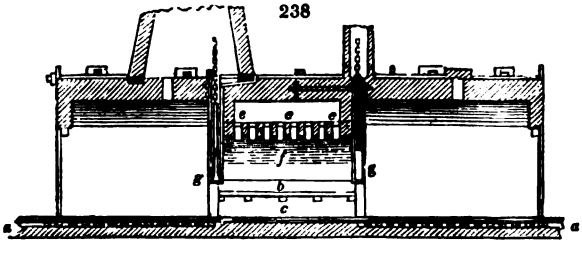

the floor of the foundry for enabling the wheels of the waggon to move rapidly backwards and forwards; *b b*, the two grates; *c c*, the ash pits; *d d*, the fire beams; *e e e*, vents in the roof of the hot chamber *f*; *g g*, two plates for shutting the hot chamber; *h*, the flue; *i*, the chimney. After rolling, the sheets, covered with black oxide of copper, are plunged for a few minutes into a mother water from the alum works, then washed in clean water, and lastly, smeared with oil, and scraped with a blunt knife.

For musical purposes, the brass wire of Berlin had acquired great and merited celebrity; but that of Birmingham and of Cheadle is now preferred by foreigners.

The following Table, for the compilation of which we are indebted to Mr. Robert Mallet, C.E., presents, in a very intelligible form, the chemical and physical conditions of the various kinds of brass:—

Digitized by Google

	Chemical Constitution.	Composition by Weight per Cent.	Atomic Weight, H = 1.	Specific Gravity.	Fracture *	Colour of Fracture.	Ultimate Cohesion per Square Inch.	Inverse Order of Ductility.	Order of Malleability at 60°.	Inverse Order of Hardness, &c.	Inverse Order of Fusibility, &c.	Commercial Titles, characteristic Properties in Working, &c.
							Tons.					
1	Cu +	100·00 + 0	31·6	8·667	E	Tile red	24·6	8	1	22	15	Copper.
2	10 Cu + Zn	90·72 + 9·28	348·3	8·605	CC	Reddish yellow, 1	12·1	6	13	21	14	Similor, &c. (Several of these are malleable at high temperatures.)
3	9 Cu + Zn	89·80 + 10·20	316·7	8·607	FC	Ditto 2	11·5	4	11	20	13	
4	8 Cu + Zn	88·60 + 11·40	285·1	8·633	FC	Ditto 3	12·8	2	10	19	12	
5	7 Cu + Zn	87·30 + 12·70	253·4	8·587	FC	Ditto 4	13·2	9	9	18	11	
6	6 Cu + Zn	85·40 + 14·60	221·9	8·591	FF	Yellowish red, 3	14·1	5	8	17	10	
7	5 Cu + Zn	83·02 + 16·98	190·3	8·451	FC	Ditto 2	13·7	11	2	16	9	Bath metal.
8	4 Cu + Zn	79·65 + 20·35	158·7	8·448	FC	Ditto 1	14·7	7	3	15	8	Dutch brass.
9	3 Cu + Zn	74·58 + 25·42	127·1	8·397	EC	Pale yellow	13·1	10	4	14	7	Rolled sheet brass.
10	5 Cu + 2 Zn	71·43 + 28·57	222·6	?	-	- - - - -	- - -	- - -	- - -	- - -	- - -	Normal brass.
11	2 Cu + Zn	66·18 + 33·82	95·5	8·299	EC	Full yellow, 1	12·5	3	6	13	6	British brass.
12	19 Cu + 12 Zn	60·00 + 40·00	988·0	8·200	C	Ditto	1·9	1	3	15	6	Muntz's patent sheathing.
13	Cu + Zn	49·47 + 50·53	63·9	8·230	CC	Ditto 2	9·2	12	5	12	6	German brass.
14	Cu + 2 Zn	32·85 + 67·15	96·2	8·283	CC	Deep yellow	19·3	1	7	10	6	German brass, watchmakers'.
15	8 Cu + 17 Zn	31·52 + 68·48	801·9	7·721	C	Silver white, 1	2·1	0	22	5	5	Very brittle (Too hard to file or turn; lustre nearly equal to speculum metal.)
16	8 Cu + 18 Zn	30·30 + 69·70	834·2	7·836	VC	Ditto 2	2·2	0	23	6	5	Ditto
17	8 Cu + 19 Zn	29·17 + 70·83	866·6	8·019	C	Silver grey, 1	0·7	0	21	7	5	Ditto
18	8 Cu + 20 Zn	28·12 + 71·88	898·8	7·603	V	Ash grey, 3	3·2	0	19	3	5	Brittle
19	8 Cu + 21 Zn	27·10 + 72·90	931·1	8·058	C	Silver grey, 2	0·9	0	18	9	5	Ditto
20	8 Cu + 22 Zn	26·24 + 73·76	936·4	7·882	C	Ditto 1	0·8	0	20	8	5	Very brittle
21	8 Cu + 23 Zn	25·39 + 74·61	995·7	7·443	FC	Ash grey, 4	5·9	0	15	1	5	Barely malleable.
22	Cu + 3 Zn	24·50 + 75·50	128·5	7·449	FC	Ditto 1	3·1	0	16	2	4	Brittle.
23	Cu + 4 Zn	19·65 + 80·36	160·8	7·371	FC	Ditto 2	1·9	0	14	4	3	White button metal.
24	Cu + 5 Zn	16·36 + 83·64	193·1	6·605	FC	Very dark grey	1·8	0	17	11	2	Brittle.
25	+ Zn	0 + 100·00	32·3	6·895	TC	Bluish grey	15·2	13	12	23	1	Brittle zinc.

* E, signifies earthy; CC, coarse crystalline; FC, fine crystalline; FF, fine fibrous; C, conchoidal; V, vitreous; VC, vitreo-conchoidal; TC, tabular crystalline.

Digitized by Google

BRASS, MALLEABLE. It is known that common brass, containing from 27·4 to 31·8 per cent. of zinc and from 71·9 to 65·8 per cent. of copper, is not malleable while hot, but that articles of it must be made by casting. As it would be of great advantage in many branches of industry to have an alloy of this kind that could be worked while hot, like malleable iron, the information that such an alloy exists must be welcome to artists.

By melting together 33 parts of copper and 25 parts of zinc, there was a loss of 3 parts, thus making 60 per cent. copper and 40 per cent. zinc. It differs from the English specimens by containing a larger proportion of zinc, and possesses, according to M. Machts, the proprietor of a brass foundry in Hanover, the precious property of malleability in a higher degree than the English specimens.

A piece of "yellow metal," similar in colour to this alloy, was found on analysis to contain 60·16 copper and 39·71 zinc, which is the composition of malleable brass. It also showed great density or solidity.

An alloy was prepared by melting together 60 parts copper and 40 parts zinc, which had the following properties:—The colour was between that of brass and tombak, it had a strong metallic lustre, a fine close-grained fracture, and great solidity (density). Its specific gravity at the temperature of 10° C. was 8·44; by calculation it ought only to have been 8·08; thus showing that in the formation of the alloy a condensation must have taken place. Calculation shows that the alloy may be considered as a determinate chemical combination, for the results of the analysis very nearly accord with the assumption that it may be considered as composed of three atoms by weight of copper and two atoms by weight of zinc ($3Cu + 2Zn$). The hardness of the alloy is the same as that of fluor spar; it can be scratched by apatite (phosphate of lime), consequently its hardness is $= 4$. The alloy is harder than copper, very tough, and is, in a properly managed fire, malleable; so much so that a key was forged out of a cast rod.

These important properties of this alloy warrant an expectation of its application to many purposes in the arts, and it would appear that they depend on its definite chemical proportions.

We learn some further particulars from the "Gewerbeverein," of Lower Austria. The commission obtained from an English specimen 65·03 of copper and 34·76 zinc. Elsner analysed a malleable brass, and found it to contain 61·16 copper and 39·71 zinc. These numbers approximate to the composition Cu^2Zn^2 (59·4 per cent. copper and 40·6 zinc).—*Liebig and Kopp's Report.*

The alloy noticed in the preceding paragraphs, is identical with that known as "Muntz's patent sheathing"; (see table on opposite page).

The chief properties of value in brass, are its colour, hardness (which is superior to that of copper), and power of taking delicate impressions when cast in a mould. As a rule, the malleability diminishes with the increase in the quantity of zinc.

Influence of impurities on brass.—The effect of the admixture of foreign metals on brass is somewhat similar to that produced by them in copper. Antimony is most injurious, as it renders the metal brittle and liable to crack at the edges in rolling.

Lead also has a hardening effect on brass, and is useful for all work that requires to be turned or filed; as the addition of about two per cent. causes the turnings to break short, and thus prevents the tool from becoming clogged. The same effect is produced in brass for engraving by the addition of a small quantity of tin.

The surface of brass work requires to be protected from the action of the air, by a coating of a less oxidizable metal, or a resinous varnish or lacquer. The metal is first brought up to a clean face by the process of "dipping" or immersion into weak nitric acid, whereby the adherent scale or oxide formed during annealing is removed. By varying the strength of the acid employed, and repeating the dipping, the metal may be made to assume a "matt," dead, or frosted appearance. After dipping, the metal is washed in water, and dried by imbedding it in hot sawdust. The lacquer, which is an alcoholic solution of shellac, more or less coloured with dragon's blood, according to the tint desired in the finished work, is brushed over the article when in a heated state, and dried over a stove. The colour in the lacquer helps to produce a higher or more golden tint than that due to the metal alone.

Brass work is bronzed in several different ways; the most usual are, immersion in a solution of arsenious acid, in hydrochloric acid, or in bichloride of platinum. The former is chiefly employed for cheap work, such as common gas fittings, while the latter is used for blacking or bronzing telescopes, mathematical instruments, and similar fine work. The effect, in either case, is the production of a film of dark coloured metal on the surface of the brass, namely, arsenic in the former, and platinum in the latter case. This operation is performed after dipping, and before lacquering.

For the method of covering brass with a film of tin, see PIN MANUFACTURE.

BRASS FOIL. Dutch leaf, called *Knitter* or *Rauschgold* in Germany, is made from a very thin sheet brass, beat out under a hammer worked by water power, which gives from 300 to 400 strokes per minute, from 40 to 80 leaves being laid over each

Digitized by Google

other. By this treatment it may be reduced to leaves not more than $\frac{1}{50,000}$ of an inch thick. The metal employed is one rich in copper.

Brass, Yellow. The following Table exhibits the composition of several varieties of this species of brass. No. 1 is a cast brass of uncertain origin; 2, the brass of Jemappes; 3, the sheet brass of Stolberg, near Aix-la-Chapelle; 4 and 5, the brass for gilding, according to D'Arcet; 6, the sheet brass of Romilly; 7, English brass wire; 8, Augsburg brass wire; 9, brass wire of Neustadt-Eberswald, in the neighbourhood of Berlin:—

	1.	2.	3.	4.	5.	6.	7.	8.	9.
Copper -	61·6	64·6	64·8	63·70	64·45	70·1	70·29	71·89	70·16
Zinc - -	35·3	33·7	32·8	33·55	32·44	29·9	29·26	27·63	27·45
Lead - -	2·9	1·4	2·0	0·25	2·86	- -	0·28	- -	0·20
Tin - -	0·2	0 2	0·4	2·50	0·25	- -	0·17	0·85	0·79
	100·0	99·9	100·0	100·00	100·00	- -	100·00	100·37	98·60

Tombak, or Red Brass, in the cast state, is an alloy of copper and zinc, containing not more than 20 per cent. of the latter constituent. The following varieties are distinguished:—1, 2, 3, tombak for making gilt articles; 4, French tombak for sword-handles, &c.; 5, tombak of the Okar, near Goslar, in the Hartz; 6, yellow tombak of Paris for gilt ornaments; 7, tombak for the same purpose from a factory in Hanover; 8, chrysochalk; 9, red tombak from Paris; 10, red tombak of Vienna.

	1.	2.	3.	4.	5.	6.	7.	8.	9.	10.
Copper -	82·0	82	82·3	80	85	85·3	86	90·0	92	97·8
Zinc - -	18·0	18	1·75	17	15	14·7	14	7·9	8	2·2
Lead - -	1·5	3	- -	-	- -	- -	- -	1·6		
Tin - -	3·0	1	0·2	3	trace.					
	104·5	104	100·0	100	100	100·0	100	99·5	100	100·0

Mr. Holtzapffel, in his "Mechanical Manipulation," has given some very important descriptions of alloys. From his long experience in manufacture, no one was more capable than Mr. Holtzapffel to speak with authority on the alloys of copper and zinc. From his work, the following particulars have been obtained:—

The red colour of copper slides into that of yellow brass at about 4 or 5 ounces of zinc to the pound of copper, and remains little altered unto about 8 or 10 ounces; after this it becomes whiter, and when 32 ounces of zinc are added to 16 of copper, the mixture has the brilliant silvery colour of speculum metal, but with a bluish tint.

These alloys—from about 8 to 16 ounces to the pound of copper—are extensively used for dipping, a process adopted for giving a fine colour to an enormous variety of furniture work. The alloys with zinc retain their malleability and ductility well unto about 8 or 10 ounces to the pound; after this the crystalline character slowly begins to prevail. The alloy of 2 zinc and 1 copper may be crumbled in a mortar when cold. In the following list, the quantity of zinc employed to 1 lb. of copper is given:—

1 to 1¼ oz. gilding metal for common jewellery.
3 to 4 oz. Bath metal, pinchbeck, Mannheim gold, Similor; and alloys bearing various names, and resembling inferior jewellers' gold.
8 oz. Emerson's patent brass.
10¾ oz. Muntz's metal, or 40 zinc and 60 copper. "Any proportions," says the patentee, "between the extremes, 50 zinc and 50 copper and 37 zinc and 63 copper, will roll and work well at a red heat."
16 oz. soft spelter solder, suitable for ordinary brass work.
16¼ oz. Hamilton and Parker's patent mosaic gold.

Brass is extensively employed for the bearings of machinery. Several patents have been taken out for compositions varying but slightly. The following, for improvements in casting the bearings and brasses of machinery, appears important:—Mr. W. Hewit-

Digitized by Google

son, of Leeds, directs, in his patent, that the proper mixture of alloy, copper, tin, and zinc, should be run into metal or "chill" moulds, in place of the ordinary moulds. In large castings, it is found more especially that the metals do not mix intimately in cooling, or, rather, they arrange themselves into groups when cast in sand, and the bearings are found to wear out more quickly; but if the bearings are cast so that the alloy comes in contact with metal, the mixture is more intimate, and the bearings last longer than if cast in dry or green sand moulds.

Mr. Hewitson generally only applies these chill-metal surfaces of the moulds to those parts of a brass, or bearing, that are to receive the shaft or bear the axis of a machine. The chills are preferred of iron, perforated with holes ($\frac{1}{16}$th to $\frac{1}{8}$th inch) for the passage of air or vapours; the surface should be thinly coated with loam, and heated to about 200°.

Fenton's patent metal consists of copper, spelter, and tin: it has less specific gravity than gun metal, and is described as being "of a more soapy nature," by which, consequently, the consumption of oil or grease is lessened.

Many of the patentees of bearing metals assure us, that the metals they now use differ very considerably from the statement in their specifications. Surely this requires a careful examination.

We *exported* of our BRASS MANUFACTURES, in 1864, as follows:—

	Cwts.	£
Brass wire of all sorts, and manufactures of wire -	10,950	54,648
Brass tubing - - - - - - - - -	8,077	41,554
Wrought brass of all other sorts, not being ordnance and not otherwise described - -	23,646	137,811

In the same year we *imported*:—

Brass manufactures, unenumerated - - - -	4,643	49,802
Brass, old, fit only to be remanufactured - - -	3,085	6,325

BRASS COLOUR, for staining glass, is prepared by exposing for several days thin plates of brass upon tiles in the *leer*, or annealing arch of the glass house, till they are oxidised into a black powder, aggregated in lumps. This being pulverised and sifted, is to be again well calcined for several days more, till no particles remain in the metallic state, when it will form a fine powder of a russet-brown colour. A third calcination must now be given with a carefully regulated heat, its quality being tested from time to time by fusion with some glass. If it makes the glass swell and intumesce, it is properly prepared; if not, it must be still further calcined. Such a powder communicates to glass greens of various tints, passing into turquoise.

When thin narrow strips of brass are stratified with sulphur in a crucible, and calcined at a red heat, they become friable and may be reduced to powder. This being sifted and exposed upon tiles in a reverberatory furnace for 10 or 12 days, becomes fit for use, and is capable of imparting a chalcedony—red or yellow—tinge to glass by fusion, according to the mode and proportion of using it.

The glassmakers' red colour may be prepared by exposing small plates of brass to a moderate heat in a reverberatory furnace till they are thoroughly calcined, when the substance becomes pulverulent, and assumes a red colour. It is then ready for immediate use.

Brass colour, as employed by the colourmen to imitate brass, is of two tints—the red or bronze, and the yellow, like gilt brass. Copper filings mixed with red ochre, or bole, constitute the former; a powdered brass, imported from Germany, is used for the latter. Both must be worked up with varnish after being dried with heat, and then spread flat with a camel-hair brush evenly upon the surface of the object. The best varnish is composed of 20 ounces of spirits of wine, 2 ounces of shellac, and 2 ounces of sandarach, properly dissolved. (See VARNISH.) Only so much of the brass powder and varnish should be mixed at a time as is wanted for immediate use. See BRONZE POWDER.

BRASSES COAL, or BRASS OF COAL. Names given to iron pyrites found in the coal measures. In 1864, it was estimated that the following quantities were produced and used:—

NORTHUMBERLAND and DURHAM - - -	7,560 tons.
YORKSHIRE - - - - - - - -	3,425 „
LANCASHIRE - - - - - - - -	2,500 „

These sulphur ores are employed in Yorkshire, Lancashire, and on the Tyne, in the manufacture of the protosulphate of iron (copperas.) For this purpose they are extended in wide-spread heaps, and thus exposed to atmospheric influences. The

Digitized by Google

result is the conversion of the sulphur into sulphuric acid, which reuniting with the iron forms the sulphate of the protoxide of iron, which is dissolved out and crystallised. It is the presence of iron pyrites in coal (Brasses), which gives the tendency to spontaneous combustion. A large number of the ships which are sent from South Wales to Chili, with coals, which are used for smelting the copper ores of that country, take fire when they reach the tropics. This arises mainly from carelessness. In the first place, the coals are not carefully selected. They are bought cheaply, and being small, are put on board the ships, without being washed or picked, and frequently damp. During the voyage, decomposition goes on, and by the time they reach the warmer latitudes, a temperature sufficiently high to occasion actual combustion is produced. By carefully washing the coal and drying it, these casualties might be almost entirely prevented. BRASS is a name given to an iron ore found in the coal measures of South Wales, which is not a pyritic ore, although for a long period mistaken for it. See COAL BRASS.

BRASSING IRON. Iron ornaments are covered with copper or brass by properly preparing the surface, so as to remove all organic matter, which would prevent adhesion, and then plunging them into melted brass. A thin coating is thus spread over the iron, and it admits of being polished or burnished. The electro-magnetic process is now employed for the purpose of precipitating brass on iron. This process was first mentioned in Shaw's "Metallurgy," in 1844, where he remarks, "In depositing copper upon iron, a solution of the cyanide or acetate of copper should be employed. The only value of these salts is, that a dye or surface of iron may be immersed in their solutions without receiving injury by the corrosion consequent upon the deposition of a film of metal by chemical action." The following solutions are recommended by Dr. Woods, in the "Scientific American," for coating iron with copper, zinc, or brass, by the electrotype process.

To make a *Solution of Copper or Zinc.*—Dissolve 8 ounces (troy) cyanide of potassium and 3 ounces of cyanide of copper or zinc in 1 gallon of rain or distilled water. These solutions to be used at about 160° F. with a compound battery of from 3 to 12 cells.

To prepare a *Solution of Brass.*—Dissolve 1 lb. (troy) cyanide of potassium, 2 ounces of cyanide of copper, and 1 ounce of cyanide of zinc, in one gallon of rain or distilled water; then add two ounces of muriate of ammonia. This solution is to be used at 160° F. for smooth work, and from 90° to 120°, with a compound battery of from 3 to 12 cells. See ELECTRO-METALLURGY.

BRATTICE. The division in a shaft of a colliery is so called. It is used to ensure an up and a down cast current. Brattices may be also used in any of the levels for the same purpose. They may be of metal, of wood, or tarred canvas. Mining engineers speak of a *natural brattice*, i. e. one independent of any artificial arrangement—when the currents separate naturally in a shaft or a level—and thus produce a natural ventilation.

BRAZILIAN ARROW ROOT. See ARROW ROOT.

BRAZIL NUTS. The hard-shelled fruit of the *Bertholletia Excelsa*, which is roundish and about six inches in diameter, contains about two dozen of the elongated wrinkled triangular seeds—these are the "nuts" of the shops. See PARA NUTS.

BRAZIL WOOD. (*Bois de Pernambouc*, Fr.; *Brasilienholz*, Germ.) This dye-wood gives its name to the part of America whence it was first imported. It has also the names of Pernambuca, wood of St. Martha, and of Sapan, according to the places which produce it. Linnæus distinguishes the tree which furnishes the Brazil wood by the name of *Cæsalpinia crista*. It commonly grows in dry places among rocks. Its trunk is very large, crooked, and full of knots. It is very hard, susceptible of a fine polish, and sinks in water. It is pale when newly cleft, but becomes red on exposure to the air. The following is a very exact description of the tree producing this wood:—

The *ibiripitanga*, or Brazil wood, called, in Pernambuco, *pao da rainha* (Queen's wood), on account of its being a Government monopoly, is now rarely to be seen within many leagues of the coast, owing to the improvident manner in which it has been cut down by the Government agents, without any regard being paid to the size of the tree or its cultivation. It is not a lofty tree. At a short distance from the ground, innumerable branches spring forth and extend in every direction in a straggling, irregular, and unpleasing manner. The leaves are small and not luxuriant; the wood is very hard and heavy, takes a high polish, and sinks in water; the only valuable portion of it is the heart, as the outward coat of wood has not any peculiarity. The name of this wood is derived from *brasas*, a glowing fire or coal; its botanical name is *Cæsalpinia Brasileto*. The leaves are pinnated, the flower white and papilionaceous, growing in a pyramidal spike: one species has flowers variegated with red. The

Digitized by Google

branches are slender and full of small prickles. There are nine species. See Bell's "Geography."

The species *Brasileto*, which is inferior to the *crista*, grows in great abundance in the West Indies. The demand for the *Brasileto*, a few years ago, was so great, owing to its being a little cheaper than the *crista*, that nearly the whole trees in the British possessions were cut down and sent home, which Mr. Bell very justly terms improvidence. It is not now so much used, and is consequently scarcer in the English market.

The wood known in commerce as *Pernambuco* is most esteemed, and has the greatest quantity of colouring matter. It is hard, has a yellow colour when newly cut, but turns red by exposure to the air. That kind termed *Lima wood* is the same in quality. *Sapan wood* grows in Japan, and in quality is next the two named above. It is not plentiful, but is much valued in the dyehouse for red of a certain tint; it gives a very clear and superior colour. The quantity of ash that these two qualities of wood contain is worthy of remark. Lima wood, as imported, gives the average of 2·7 per cent., while Sapan wood gives 1·5 per cent.; in both, the prevailing earth is lime. The quantity of moisture in the wood averages about 10 per cent.; that in the ground wood in the market about 20 per cent.

Brazil wood has different shades of red and orange. Its goodness is determined particularly by its density. When chewed, a saccharine taste is perceived. It may be distinguished from red saunders wood by its colouring water, which the latter does not.

BRAZIL WOOD DYES. Boiling water extracts the whole colouring matter of Brazil wood, and if the ebullition be long enough continued, it assumes a fine red colour. The residuum appears black. In this case an alkali may still extract much colouring matter. The solution in alcohol or ammonia is still deeper than the preceding.

The decoction of Brazil wood, called juice of Brazil, is observed to be less fit for dyeing when recent than when old, or even fermented. By age it takes a yellowish-red colour. For making this decoction, Hellot recommends the use of the hardest water; but it should be remarked that this water deepens the colour in proportion to the *earthy* salts which it contains. After boiling this wood reduced to chips, or, what is preferable, to powder, for three hours, this first decoction is poured into a cask. Fresh water is poured on the wood, which is then made to boil for three hours, and mixed with the former. When Brazil wood is employed in a dyeing bath, it is proper to inclose it in a thin linen bag.

Wool immersed in the juice of Brazil wood takes but a feeble tint, which is speedily destroyed; it must therefore receive some preliminary preparations.

The wool is to be boiled in a solution of alum, to which a fourth or even less of tartar is added, for a larger proportion of tartar would make the colour yellowish. The wool is kept impregnated with it, for at least eight days, in a cool place. After this, it is dyed in the Brazil juice with a slight boiling. But the first colouring particles that are deposited afford a less beautiful colour; hence it is proper to pass a coarser stuff previously through the bath. In this manner a lively red is procured, which resists pretty well the action of the air.

Brazil wood is made use of for dyeing silk the colour known as false crimson, to distinguish it from the crimson made by means of cochineal, which is much more permanent.

The silk should be boiled at the rate of 20 parts of soap per cent., and then alumed. The aluming need not be so strong as for the fine crimson. The silk is refreshed at the river, and passed through a bath more or less charged with Brazil juice, according to the shade to be given. When water free from earthy salts is employed, the colour is too red to imitate crimson; this quality is given it by passing the silk through a slight alkaline solution, or by adding a little alkali to the bath. It might, indeed, be washed in a hard water till it had taken the desired shade. They thus become permament colours. But what distinguishes them from madder and kermes, and approximates them to cochineal, is their reappearing in their natural colour, when they are thrown down in a state of combination with alumina, or with oxide of tin. These two combinations seem to be the fittest for rendering them durable. It is requisite, therefore, to inquire what circumstances are best calculated to promote the formation of these combinations according to the nature of the stuff.

The astringent principle, likewise, seems to contribute to the permanence of the colouring matter of Brazil wood; but it deepens its hue, and can only be employed for light shades.

To make deeper false crimsons, a dark red juice of logwood is put into the Brazil bath after the silk has been impregnated with it. A little alkali may be added, according to the shade that is wanted.

To imitate poppy or flame colour, an arnotto ground is given to the silk, deeper

Digitized by Google

even than when it is dyed with carthamus; it is then washed, alumed, and dyed with juice of Brazil, to which a little soap water is usually added.

The colouring particles of Brazil wood are easily affected, and made yellow by the action of acids.

The colouring particles of Brazil wood are very sensible to the action of alkalis, which give them a purple hue; and there are several processes in which the alkalis, either fixed or volatile, are used for forming violets and purples. But the colours obtained by these methods, which may be easily varied according to the purpose, are perishable, and possess but a transient bloom. The alkalis appear not to injure the colours derived from madder, but they accelerate the destruction of most other colours.

In England and Holland the dye-woods are reduced to powder by means of mills erected for the purpose.

The bright fugitive red, called fancy red, is given to cotton by Nicaragua, or peach wood, a cheap kind of Brazil wood. See PEACH WOOD.

The cotton being scoured and bleached, is boiled with sumach. It is then impregnated with a solution of tin (at 5° B., according to Vitalis). It should now be washed slightly in a weak bath of the dyeing wood; and, lastly, worked in a somewhat stale infusion of the peach or Brazil wood. When the temperature of this is lukewarm, the dye is said to take better. Sometimes two successive immersions in the bath are given. It is now wrung out, aired, washed in water, and dried.

M. Vitalis says, that his solution of tin is prepared with two ounces of tin and a pound of aqua regia, made with two parts of nitric acid at 24° B. and three parts of muriatic acid at 22°.

For a rose colour, the cotton is alumed as usual, and washed from the alum. It then gets the tin mordant, and is again washed. It is now turned through the dye-bath, an operation which is repeated if necessary.

For purple, a little alum is added to the Brazil bath.

1. For amaranth, the cotton is strongly galled, dried, and washed.
2. It is passed through the black cask (*tonneau noir*, see BLACK DYE), till it has taken a strong grey shade.
3. It receives a bath of lime water.
4. Mordant of tin.
5. Dyeing in the Brazil wood bath.
6. The last two operations are repeated.

Dingler has endeavoured to separate the colouring matter of the different sorts of Brazil wood, so as to obtain the same tint from the coarser as from the best Pernambuco. His process consists in treating the wood with hot water or steam, in concentrating the decoction so as to obtain 14 or 15 pounds of it from 4 pounds of wood, allowing it to cool, and pouring into it two pounds of skim milk; agitating, then boiling for a few minutes, and filtering. The dun colouring matters are precipitated by the coagulation of the caseous substance. For dyeing, the decoctions must be diluted with water; for printing, they must be concentrated so that 4 pounds of wood shall furnish only 5 or 6 pounds of decoction, and the liquor may be thickened in the ordinary way. These decoctions may be employed immediately, as by this treatment they have acquired the same property as they otherwise could get only by being long kept. A slight fermentation is said to improve the colour of these decoctions; some ground wood is put into the decoction to favour this process.

Gall-nuts, however, sumach, the bark of birch or alder, render the colour of Brazil wood more durable upon alumed linen and cotton goods, but the shade is a little darker.

In dyeing wool with Pernambuco Brazil wood, the temperature of the bath should never be above 150° F., since higher heats impair the colour.

According to Dingler and Kurrer, bright and fast scarlet reds may be obtained upon wool, by preparing a decoction of 50 pounds of Brazil wood in three successive boils, and setting the decoction aside for 3 or 4 weeks in a cool place; 100 pounds of the wool are then alumed in a bath of 22 pounds of alum and 11 pounds of tartar, and afterwards rinsed in cold water. Meanwhile we fill two-thirds with water a copper containing 30 pails, and heated to the temperature of 150° or 160° F. We pour in 3 pailfuls of the decoction, heat to the same point again, and introduce 30 pounds of wool, which does not take a scarlet, but rather a crimson tint. This being removed, 2 pails of decoction are put in, and 30 pounds of wool, which becomes scarlet, but not so fine as at the third dip. If the dyer strengthens the colour a little at the first dip, a little more at the second, and adds at the third and fourth the quantity of decoction merely necessary, he will obtain an uniform scarlet tint. With 50 pounds of Pernambuco, 1000 pounds of wool may be dyed scarlet in this way, and with the deposits another 100 may be dyed of a tile colour. An addition of weld renders the colour faster, but less brilliant. See WELD.

Digitized by Google

Karkutsch says the dye may be improved by adding some ox-gall to the bath.

In dyeing cotton, the tannin and gallic acid are two necessary mordants, and the colour is particularly bright and durable when the cloth has been prepared with the oily process of Turkey red.

It is said that stale urine heightens the colour of the Brazil dye when the ground wood is moistened with it.

Chevreul obtained the colouring matter from Brazil wood in the following manner: — Digest the raspings of the wood in water till all the colouring matter is dissolved, and evaporate the infusion to dryness, to get rid of a little acetic acid which it contains. Dissolve the residue in water, and agitate the solution with litharge, to get rid of a little fixed acid. Evaporate again to dryness; digest the residue in alcohol; filter and evaporate, to drive off the alcohol. Dilute the residual matter with water, and add to the liquid a solution of glue, till all the tannin which it contains is thrown down; filter again, and evaporate to dryness, and digest the residue in alcohol, which will leave undissolved any excess of glue which may have been added. The last alcoholic solution, being evaporated to dryness, leaves *brezilin*, the colouring matter of the wood, in a state of considerable purity.

The *importations* of BRAZIL WOOD (which has been admitted free since 19th March, 1845) in 1864 were as follows:—

	Tons.	Computed real value.
From United States: Ports on the Pacific	750	£7,500
Mexico	930	9,300
Central America	306	3,060
Other parts	84	840
	2,070	20,700

BRAZILIN and BRAZILEIN are two colouring matters which have been separated from Brazil wood, by Chevreul and Preisser. They are probably identical. See Watts' "Dictionary of Chemistry."

BRAZING. See SOLDERS and SOLDERING.

BREAD. One of the most important, if not altogether the most important, article of food, unquestionably, is bread; and although rye, barley, oats, and other cereals, are sometimes used by the baker, *wheat* is the grain which is best fitted for the manufacture of that article, not only on account of the larger amount of gluten, or nitrogenous matter, which it contains, and than can be found in other edible grains, but also on account of the almost exact balance in which the nitrogenous and non-nitrogenous constituents exist in that cereal, and owing to which it is capable of ministering to all the requirements of the human frame, and of being assimilated at once and without effort by our organs, whence the name of "staff of life," which is often given to it, wheat being, like milk, a perfect food.

Although gluten is one of the most important constituents of wheat, the nutritive power of its flour, and its value as a bread-making material, should not be altogether considered as dependent upon the quantity of gluten it may contain, even though it be of the best quality. Doubtless a high per-centage of this material is desirable, but there are other considerations which must be taken into account; for, in order to become available for making good bread, flour, in addition to being sound and genuine, must possess other qualities beyond containing merely a large amount of gluten. Thus, for example, the *blé rouge glacé d'Auvergne*, which contains hardly 45 per cent. of starch, and as much as 36 per cent. of gluten, though admirably adapted for the manufacture of macaroni, vermicelli, semolina, and other *pâtes d'Italie*, is totally unfit for making good bread; the flour used for making best white loaves containing only from 10 to 18 per cent. of gluten, and from 60 to 70 per cent. of starch.

Bread is obtained by baking a dough, previously fermented either by an admixture of yeast or leaven, or it is artificially rendered spongy by causing an acid, muriatic or tartaric, to react upon carbonate or bicarbonate of soda, or of ammonia, mixed in the doughy mass; or, as in Dr. Dauglish's process, which will be described further on, by mixing the flour which has to be converted into dough, not with ordinary water, but with water strongly impregnated with carbonic acid.

Although a history of bread making cannot be introduced in the present article, a few words on the subject, reproduced from the former edition of this work, will not be deemed uninteresting.

Pliny informs us, that barley was the only species of corn at first used for food; and even after the method of reducing it to flour had been discovered, it was long before mankind learned the art of converting it into cakes.

Ovens were first invented in the East. Their construction was understood by the Jews, the Greeks, and the Asiatics, among whom baking was practised as a distinct

Digitized by Google

profession. In this art, the Cappadocians, Lydians, and Phœnicians, are said to have particularly excelled. It was not till about 580 years after the foundation of Rome that these artisans passed into Europe. The Roman armies, on their return from Macedonia, brought Grecian bakers with them into Italy. As these bakers had handmills beside their ovens, they still continued to be called *pistores*, from the ancient practice of bruising the corn in a mortar; and their bakehouses were denominated *pistoriæ*. In the time of Augustus there were no fewer than 329 public bakehouses in Rome; almost the whole of which were in the hands of Greeks, who long continued the only persons in that city acquainted with the art of baking good bread.

In nothing, perhaps, is the wise and cautious policy of the Roman government more remarkably displayed, than in the regulations which it imposed on the bakers within the city. To the foreign bakers who came to Rome with the army from Macedonia, a number of freedmen were associated, forming together an incorporation from which neither they nor their children could separate, and of which even those who married the daughters of bakers were obliged to become members. To this incorporation were entrusted all the mills, utensils, slaves, animals, everything, in short, which belonged to the former bakehouses. In addition to these, they received considerable portions of land; and nothing was withheld which could assist them in pursuing, to the best advantage, their highly prized labours and trade. The practice of condemning criminals and slaves, for petty offences, to work in the bakehouse, was still continued; and even the judges of Africa were bound to send thither, every five years, such persons as had incurred that kind of chastisement. The bakehouses were distributed throughout the fourteen divisions of the city, and no baker could pass from one into another without special permission. The public granaries were committed to their care; they paid nothing for the corn employed in baking bread that was to be given in largess to the citizens; and the price of the rest was regulated by the magistrates. No corn was given out of these granaries except for the bakehouses, and for the private use of the prince. The bakers had besides private granaries, in which they deposited the grain which they had taken from the public granaries for immediate use; and if any of them happened to be convicted of having diverted any portion of the grain to another purpose, he was condemned to a ruinous fine of five hundred pounds' weight of gold.

Most of these regulations were soon introduced among the Gauls; but it was long before they found their way into the more northern countries of Europe. Borrichius informs us that in Sweden and Norway, the only bread known, so late as the middle of the 16th century, was unleaven cakes kneaded by the women. At what period in our own history the art of baking became a separate profession, we have not been able to ascertain; but this profession is now common to all the countries in Europe, and the process of baking is also nearly the same.

The French, who particularly excel in the art of baking, have a great many different kinds of bread. Their *pain bis*, or brown bread, is the coarsest kind of all, and is made of coarse groats mixed with a portion of white flour. The *pain de méteil* is a bread made with rye and barley flour, to which wheat flour is sometimes added also. The *pain bis blanc*, is a kind of bread between white and brown, made of white flour and fine groats. The *pain blanc*, or white bread, is made of white flour, shaken through a sieve after the finest flour has been separated. The *pain mollet*, or soft bread, is made of the purest flour without any admixture. The *pain chaland*, or customers' bread, is a very white kind of bread, made of pounded paste. *Pain chapelé*, is a small kind of bread, with a well-beaten and very light paste, seasoned with butter or milk. This name is also given to a small bread, from which the thickest crust has been removed by a rasp. *Pain cornu* is a name given by the French bakers to a kind of bread made with four corners, and sometimes more. Of all the kinds of small bread this has the strongest and firmest paste. *Pain à la reine*, queen's bread, *pain à la Ségovie*, *pain chapelé*, and *pain cornu*, are all small kinds of bread, differing only in the lightness or thickness of the paste. *Pain de gruau* is a small very white bread made now in Paris, from the flour separated after a slight grinding from the best wheat. Such flour is in hard granular particles.

In England, however, we have but few varieties of bread, the loaves known under the names of *bricks*, *Coburg*, *cottage*, *batch*, and *French rolls*, being all made of the same dough; the only difference is in the *shape* given to them, their various flavours depending on the way in which they are affected by the heat of the oven in the baking. These loaves are crusted all over because they are deposited in the oven separate from each other, or baked in moulds made of tinned iron, whereas the batch bread is crusted only at the top and bottom, because the loaves, which have a cubic form, touch each other in the oven; those, however, which lie round the oven have a crust on three of their sides. The cottage and French rolls are *generally* made of best flour,—known under the name of whites;—but batch bread is made of best flour

Digitized by Google

and of households, or flour of second quality, and of *seconds*, which is flour of a third quality — that is, of flour containing more bran than the other kinds just enumerated.

We have also "rye bread," which is generally made of nothing else than ordinary wheat flour and bran.

Dr. Ure, in the former edition of this Dictionary, truly remarked, "The object of baking is to combine the gluten and starch of the flour into a homogeneous substance, and to excite such a vinous fermentative action, by means of its saccharine matter, as shall disengage abundance of carbonic acid gas in it for making an agreeable, soft, succulent, spongy, and easily digestible bread. The two evils to be avoided in baking are, hardness on the one hand and pastiness on the other. Well-made bread is a chemical compound, in which the gluten and starch cannot be recognised or separated, as before, by a stream of water. When flour is kneaded into a dough, and spread into a cake, this cake, when baked, will be horny if it be thin, or if thick, will be tough and clammy; whence we see the value of that fermentative process, which generates thousands of little cells in the mass or crumb, each of them dry yet tender and succulent through the intimate combination of the moisture. By this constitution it becomes easily soluble in the juices of the stomach, or, in other words, light of digestion. It is moreover much less liable to turn sour than cakes made from unfermented dough.

"Rye, which also forms a true spongy bread, though inferior to that of wheat, consists of similar ingredients — namely, 61·07 of starch, 9·48 of gluten, 3·28 of vegetable albumen, 3·23 of uncrystallisable sugar, 11·09 of gum, 6·38 of vegetable fibre; the loss upon the 100 parts amounted to 5·62, including an acid whose nature the analyst, M. Einhof, did not determine. Rye flour contains also several salts, principally the phosphates of lime and magnesia. This kind of grain forms a dark-coloured bread, reckoned very wholesome; comparatively little used in this country, but very much in France, Germany, and Belgium.

"Dough, fermented with the aid either of leaven or yeast, contains little or none of the saccharine matter of the flour, but, in its stead, a certain portion, nearly half its weight, of spirit, which imparts to it a vinous smell, and is volatilised in the oven, whence it might be condensed into a crude, weak alcohol, on the plan of Mr. Hick's patent, were it worth while. But the increased complexity of the baking apparatus will probably prove an effectual obstacle to the commercial success of this project, upon which a few years ago upwards of 20,000*l.* sterling were foolishly squandered.

"That the sugar of the flour is the true element of the fermentation which dough undergoes, and that the starch and gluten have nothing to do with it, may be proved by decisive experiments. The vinous fermentation continues till the whole sugar is decomposed, and no longer; when, if the process be not checked by the heat of baking, the acetous fermentation will supervene. Therefore, if a little sugar be added to a flour which contains little or none, its dough will become susceptible of fermenting, with extrication of gas, so as to make spongy succulent bread. But since this sponginess is produced solely by the extrication of gas and its expansion in the heat of the oven, any substance capable of emitting gas, or of being converted into it under these circumstances, will answer the same purpose. Were a solution of bicarbonate of ammonia obtained by exposing the common sesquicarbonate in powder for a day to the air, incorporated with the dough, in the subsequent firing it will be converted into vapour, and, in its extrication, render the bread very porous. Nay, if water highly impregnated with carbonic acid gas be used for kneading the dough, the resulting bread will be somewhat spongy. Could a light article of food be prepared in this way, then, as the sugar would remain undecomposed, the bread would be so much the sweeter and the more nourishing. How far a change propitious to digestion takes place in the constitution of the starch and gluten during the fermentative action of the dough has not been hitherto ascertained by precise experiments.

"Dr. Colquhoun, in his able essay upon the art of making bread, has shown that its texture, when prepared by a sudden formation and disengagement of elastic fluid generated within the oven, differs remarkably from that of a loaf which has been made after the preparatory fermentation with yeast. Bread which has been raised with the common carbonate of ammonia, as used by the pastry-cooks, is porous no doubt, but not spongy with vesicular spaces, like that made in the ordinary way. The former kind of bread never presents that air-cell stratification which is the boast of the Parisian baker, but which is almost unknown in London. It is, moreover, very difficult to expel by the oven the last portion of the ammonia, which gives both a tinge and a taste to the bread. The bicarbonate would probably be free from this objection, which operates so much against the use of the sesquicarbonate."—*Ure.*

The conversion of flour into bread includes two distinct operations — namely, the preparation of the dough and the baking. The preparation of the dough, however

Digitized by Google

though reckoned as one, consists, in fact, of three operations — namely, *hydrating*, *kneading*, and *fermenting*.

When the baker intends to make a batch of bread, his first care is, in technical language, *to stir a ferment*. This is done, in London, by boiling a few potatoes, in the proportion of 5 lbs. or 6 lbs. of potatoes per sack of flour (which is the quantity we shall assume it is desired to convert into bread), peeling them, mashing and straining them through a cullender, and adding thereto about three-quarters of a pailful of water, 2 or 3 lbs. of flour, and one quart of yeast. The water employed need not be warmed beforehand, for the heat of the potatoes is sufficient to impart a proper temperature (from 70° to 90° F.) to the liquid mass, which should be well stirred up with the hand into a smooth, thin, and homogeneous paste, and then left at rest.

In the course of an hour or two, the mass is seen to rise and fall, which swelling and heaving up is due to carbonic acid, generated by the fermentation induced in the mass, which may be thus left until wanted. In about three hours, this fermenting action will appear to be at an end, and when it has arrived at that stage, it is fit to be used. The ferment, however, may be left for six or seven hours and be still very good at the end of that time, but the common practice is to use it within four or five hours after its preparation.

The next operation consists in "*setting the sponge*." This consists in stirring the ferment well, adding thereto about two gallons of lukewarm water, and as much flour as will make, with the ferment, a rather stiff dough. This constitutes "*the sponge*." It is kept in a warm situation, and in the course of about an hour fermentation again begins to make its appearance, the mass becomes distended or is heaved up by the carbonic acid produced, the escape of which is impeded by the toughness of the mass. This carbonic acid is the result of the fermentation induced under the influence of water, by the action of the gluten upon the starch, a portion of which is converted thereby into sugar, and then into alcohol. A time, however, soon comes when the quantity of carbonic acid thus pent up becomes so great that it bursts through, and the sponge collapses or drops down. This is called the *first sponge*.—But as the fermentation is still going on, the carbonic acid soon causes the sponge to rise again as before to nearly twice its volume, when the carbonic acid, bursting through the mass, causes it to fall a second time; and this constitutes what the bakers call the *second sponge*. The rising and falling might then go on for twenty-four hours; but as the alcoholic would pass into the acetous fermentation soon after the second rising, the baker always interferes after the second, and very frequently after the first sponge. The bread made from the first sponge is generally sweeter; but unless the best flour is used, and even then, the loaf that is made from it is smaller in size and more compact than that which is made with the *second sponge*. In hot weather, however, as there would be much danger of the bread turning sour, if the sponge were allowed to "*take a second full*," the first sponge is frequently used. The next process consists in *breaking the sponge*, which is done by adding to it the necessary quantity of water and of salt,—the quantity of the latter substance varying from ½ lb. to ¾ of a pound per bushel of flour; that is, from 2½ lbs. to 3¾ lbs. per sack of flour (new flour, or flour of inferior quality, always requires, at the very least, 3½ lbs. per sack, *to bind it*, that is to say, to render the dough sufficiently firm to support itself while fermenting). Salt acts, to a great extent, like alum, though not so powerfully. As to the quantity of water to be used, it depends also a great deal on the quality of the flour, the best quality absorbing most; though, as we shall have occasion to remark, the baker too often contrives to force and keep into bread made from inferior flour, by a process called *under baking*, the same amount of water as is normally taken up by that of the best quality. Generally speaking, and with flour of good average quality, the amount of water is such, that the diluted sponge forms about 14 gallons of liquid. The whole mass is then torn to pieces by the hand, so as to break any lumps that there may be, and mix it up thoroughly with the water. This being done, the rest of the sack of flour is gradually added and kneaded into a dough of the proper consistency. This kneading of the dough may be said to be one of the most important processes of the manufacture, since it not only produces a more complete hydration of the flour, but, by imprisoning a certain quantity of air within the dough, and forcibly bringing into closer contact the molecules of the yeast or leaven with the sugar of the flour, and also with a portion of the starch, the fermentation or rising of the whole mass, on which the sponginess of the loaf and its digestibility subsequently depend, is secured. When by forcing the hand into the dough, the baker sees that, on withdrawing it, none of the dough adheres to it, he knows that the kneading is completed. The dough is then allowed to remain in the trough for about an hour and a half or two hours, if *brewers'* or *German yeast* have been employed in making the sponge;—if, on the contrary, *patent yeast* or *hop yeast* have been used, three or even four hours may be

Digitized by Google

required for the dough to rise up, or, as in technical language, *to give proof*. When the dough is sufficiently "*proofed*," it is weighed off into lumps, shaped into the proper forms of 4 lbs. 4 oz. each, and exposed for about one hour in an oven to a temperature of about 570° F., the heat gradually falling to 430 or 420° F. The yield after baking is 94 quartern (not 4-lb.) loaves, or from 90 to 92 really 4lb. loaves, as large again as they were when put into the oven in the shape of dough.

The manner in which yeast acts upon the flour—is as, yet, an unsolved mystery, or at any rate an, as yet, unsatisfactorily explained action; for the term "catalysis," which has sometimes been applied to it, explains absolutely nothing.

A yeast, or fermenting material, may be prepared in various ways; but only three kinds of yeast are used by bakers: namely, brewers' yeast, or barm,—German yeast, and patent, or hop yeast.

The most active of these ferments is the first, or brewers' yeast; it is, as is well known, a frothy, thickish material, of a brownish or drab colour, which, when recent, is in a state of slight effervescence, exhales a sour characteristic odour, and has an acid reaction.

When viewed through the microscope, it is seen to consist of small globules of various size, generally egg-shaped. They were first described by M. Desmayières.

The best, and in fact the only, brewers' yeast used in bread-making is that from the ale breweries; porter yeast is unavailable for the purpose, because it imparts to the bread a disagreeable bitter taste.

German yeast is very extensively used by bakers. It is a pasty but easily crumbled mass, of an agreeable fruity odour, and of a dingy white colour. German yeast will remain good for a few weeks, if kept in a cool place. When in good condition, it is an excellent article; but samples of it are occasionally seized on bakers' premises, of a darker colour, viscid, and emitting an offensive cheesy odour: such German yeast, being in a putrefied state, is, of course, objectionable.

The so-called "*patent yeast*" is the cheapest and at the same time the weakest of these ferments; very good bread, however, is made with it, and it is most extensively used by bakers. It is made either with or without hops: when with hops, it is called *hop yeast*, and is nothing more than a decoction of hops to which malt is added while in a scalding hot state; when the liquor has fallen to a blood heat, a certain quantity of brewers' or German yeast is thoroughly mixed with it, and the whole is left at rest. The use of the hops is intended to diminish the tendency of this solution to become acid.

Potato yeast is a kind of "*patent yeast*" in general use.

The theory of panification is not difficult of comprehension. "The flour," says Dr. Ure, "owes this valuable quality to the gluten, which it contains in greater abundance than any of the other *cerealia* (kinds of corn). This substance does not constitute, as has been heretofore imagined, the membranes of the tissue of the perisperm of the wheat; but is enclosed in cells of that tissue under the epidermic coats, even to the centre of the grain. In this respect the gluten lies in a situation analogous to that of the starch, and of most of the immediate principles of the vegetables. The other immediate principles which play a part in *panification* are particularly the starch and the sugar; and they all operate as follows:—

"The diffusion of the flour through the water *hydrates* the starch, and dissolves the sugar, the albumen, and some other soluble matters. The kneading of the dough, by completing these reactions through a more intimate union, favours also the fermentation of the sugar, by bringing its particles into close contact with those of the leaven or yeast; and the drawing out and laminating the dough softens and stratifies it, introducing at the same time oxygen to aid the fermentation. The dough, when distributed and formed into loaves, is kept some time in a gentle warmth, in the folds of the cloth, pans, &c., a circumstance propitious to the development of their volume by fermentation. The dimensions of all the lumps of dough now gradually enlarge, from the disengagement of carbonic acid in the decomposition of the sugar, which gas is imprisoned by the glutinous paste. Were these phenomena to continue too long, the dough would become too vesicular; they must, therefore, be stopped at the proper point of sponginess, by placing the loaf lumps in the oven. Though this causes a sudden expansion of the enclosed gaseous globules, it puts an end to the fermentation, and to their growth; as also evaporates a portion of the water.

"The fermentation of a small dose of sugar is, therefore, essential to true bread making; but the quantity actually fermented is so small as to be almost inappreciable. It seems probable that in well-made dough the whole carbonic acid that is generated remains in it, amounting to one-half the volume of the loaf itself at its baking temperature, or 212° F. It thence results that less than one-hundredth part of the weight of the flour is all the sugar requisite to produce well-raised bread.

"Although the rising of the dough is determined by the carbonic acid resulting from

Digitized by Google

the decomposition of the sugar, produced by the reaction of the gluten on hydrated or moist flour, considering that the quantity of sugar necessary to produce fermentation does not amount, probably, to more than one-hundredth part of the weight of the flour employed, and perhaps to even considerably less than that,—the saving and economy which is said to accrue to the consumer from the use of unfermented bread (which is bread in which the action of yeast is replaced by an artificial evolution of carbonic acid, by decomposing bicarbonate of soda with muriatic acid, as we said before) is therefore much below what it has been estimated (25 per cent.!) by some writers; and is certainly very far from compensating for the various and serious drawbacks which are peculiar to that kind of bread, one of which—and it is not the least—is its indigestibility, notwithstanding all that may have been said to the contrary.

"In a pamphlet entitled, 'Instructions for making Unfermented Bread, by a Physician,' published in 1846, the formula recommended for bread made of wheat meal is as follows:—

Wheat meal - - - -	3 lbs. avoirdupois.
Bicarbonate of soda - -	4½ drachms troy.
Hydrochloric acid - - -	5 fluid drachms and 25 minims, or drops.
Water - - - - -	30 fluid ounces.
Salt - - - - -	¾ of an ounce troy.

"Bread made in this manner," says the author, "contains nothing but flour, common salt, and water. It has an agreeable, natural taste, keeps much longer than common bread, is *much more digestible*, and much less disposed to turn acid," &c.

Liebig, in his "Letters on Chemistry," very judiciously remarks, "that the intimate mixture of the saliva with the bread, whilst masticating it, is a condition which is favourable to the rapid digestion of the starch; wherefore the porous state of the flour in fermented bread accelerates its digestion."

Now, it is a fact, which can be readily ascertained by anyone, that unfermented bread is permeated by fluids with difficulty. It will not absorb water, hence its heavy and clammy feel; nor saliva, hence its indigestibleness; nor milk, nor butter. Unfermented bread will neither make soup, nor toast, nor poultice. When a slice of ordinary bread is held before a bright fire, a portion of the moisture of the bread, as the latter becomes scorched, is converted into steam, which penetrates the interior of the mass, and imparts to it the sponginess so well known in a toast properly made; but if a piece of unfermented bread be treated in the same manner, the steam produced by the moisture, not being able to penetrate the unabsorbent mass, evaporates, and the result is an uninviting slice, toasted, but hard inside and out, and into which butter penetrates about to the same extent as it would a wooden slab of the same dimensions.

"Fermentation," says Liebig, "is not only the best and simplest, but likewise the most economical way of imparting porosity to bread: and besides, *chemists, generally speaking, should never recommend the use of chemicals for culinary preparations*, for chemicals are seldom met with in commerce in a state of purity. Thus, for example, the muriatic acid which it has been proposed to mix with carbonate of soda in bread is *always very impure*, and *very often contains arsenic*. Chemists never employ such an acid in operations which are certainly less important than the one just mentioned, without having first purified it."

In order to remove this ground of objection, tartaric acid has been recommended instead of muriatic acid for the purpose of decomposing the carbonate of soda; but in that way, another unsafe compound is introduced, since the result of the reaction is tartrate of soda, a diuretic aperient, and consequently very objectionable salt, for it is impossible to say what mischief the continuous ingestion of such a substance may eventually produce; and whatever may be the divergence of opinion,—if there be such a divergence,—as to whether or not the constant use of an aperient, however mild, may be detrimental to health, it surely must be admitted that, at any rate, it is better to eschew such, to say the least of it, suspicious materials; and that, at any rate, if deprecating their use be an error, it is an error on the safe side;—after all, a bake-house is not a chemical laboratory.

Before leaving this question of unfermented bread, we must not omit to speak of a remarkable process invented by Dr. Dauglish, and which has lately excited some attention. Without discussing the value of the idea which is said to have led Dr. Dauglish to invent the process in question, we shall simply describe Dr. Dauglish's method of making bread, and give his own version of its benefits:—

"Taking advantage of the well-known capacity of water for absorbing carbonic acid, whatever its density, in quantities equal to its own bulk, I first prepare the water which is to be used in forming the dough, by placing it in a strong vessel

Digitized by Google

capable of bearing a high pressure, and forcing carbonic acid into it to the extent of say ten or twelve atmospheres" (about 150 to 180 lbs. per square inch); "this the water absorbs without any appreciable increase in its bulk. The water so prepared will of course retain the carbonic acid in solution so long as it is retained in a close vessel under the same pressure. I therefore place the *flour and salt*, of which the dough is to be formed, also in a close vessel capable of bearing a high pressure. Within this vessel, which is of a spheroidal form, a simply-constructed kneeding apparatus is fitted, worked from without through a closely-packed stuffing box. Into this vessel I force an equal pressure to that which is maintained on the aërated water-vessel; and then, by means of a pipe connecting the two vessels, I draw the water into the flour, and set the kneading apparatus to work at the same time. By this arrangement the water acts simply as limpid water among the flour, the flour and water are mixed and kneaded together into paste, and to such an extent as shall give it the necessary *tenacity*. After this is accomplished the pressure is released, the gas escapes from the water, and in doing so raises the dough in the most beautiful and expeditious manner. It will be quite unnecessary for me to point out how perfect must be the *mechanical* structure that results from this method of raising dough. In the first place, the mixing and kneading of the flour and water together, before any vesicular property is imparted to the mass, render the most complete incorporation of the flour and water a matter of very easy accomplishment; and this being secured, it is evident that the gas which forms the vesicle, or sponge, when it is released, must be dispersed through the mass in a manner which no other method—fermentation not excepted—could accomplish. But besides the advantages of kneading the dough before the vesicle is formed, in the manner above mentioned, there is another, and perhaps a more important one, from what it is likely to effect by giving scope to the introduction of new materials into bread making,—and that is, I find that powerful machine-kneading, continued for several minutes, has the effect of imparting to the dough tenacity or toughness. In Messrs. Carr and Co.'s machine, at Carlisle, we have kneaded some wheaten dough for half an hour, and the result has been that the dough has been so tough, that it resembled birdlime, and it was with difficulty pulled to pieces with the hand. Other materials, such as rye, barley, &c. are affected in the same manner. So that by thus kneading, I am able to impart to dough made from materials which otherwise would not make light bread, from their wanting that quality in their gluten which is capable of holding or retaining, the same degree of lightness which no other method is capable of effecting. And I am sanguine of being able to make from rye, barley, oatmeal, and other wholesome and nutritious substances, bread as light and sweet as the finest wheaten bread. One reason why my process makes a bread so different from all other processes where fermentation is not followed is, that I am enabled to knead the bread to any extent without spoiling its vesicular property; whilst all other unfermented breads are merely *mixed*, not kneaded. The property thus imparted to my bread by kneading, renders it less dependent on being placed immediately in the oven. It certainly cannot *gain* by being allowed to stand after the dough is formed, but it bears well the necessary standing and waiting required for preparing the loaves for baking.

"There is one point which requires care in my process, and that is,—the *baking*: as the dough is excessively cold; first, because *cold* water is used in the process; and next, because of its sudden expansion on rising. It is thus placed in the oven some 40° Fahr. in temperature lower than the ordinary fermented bread. This, together with its slow springing until it reaches the boiling point, renders it essential that the *top* crust shall not be formed until the very last moment. Thus, I have been obliged to have ovens constructed which are heated through the bottom, and are furnished with the means of regulating the heat of the top, so that the bread is *cooked through the bottom*; and, just at the last, the top heat is put on and the top crust formed.

"With regard to the *gain* effected by saving the loss by fermentation, I may state what must be evident, that the weight of the dough is always exactly the sum of the weight of flour, water, and salt put into the mixing vessel; and that, in all our experiments at Carlisle, we invariably made 118 loaves from the same weight of flour which by fermentation made only 105 and 106. Our advantage in gain over fermentation can only be equal to the *loss* by fermentation. As there has been considerable difference of opinion among men of science with respect to the amount of this loss—some stating it to be as high as 17½ per cent., and others so low as 1 per cent.—I will here say a few words on the subject. Those who have stated the loss to be as high as 17½ per cent. have, in support of their position, pointed to the extra yield from the same flour of bread when made by non-fermentation, compared with that made by fermentation. Whilst those who have opposed this assertion, and stated the loss to be but 1 per cent. or little more, have declared the gain in weight to be simply a gain of extra water, and have based their calculations of loss on the destruction of

Digitized by Google

material caused by the generation of the necessary quantity of carbonic acid to render the bread light. Starting then with the assumption that light bread contains in bulk half solid matter and half aëriform, they have calculated that this quantity of aëriform matter is obtained by a destruction of but *one* per cent. of solid material. In this calculation the loss of carbonic acid, by its escape through the mass of dough during the process of fermentation and manufacture, does not appear to have been taken into account. All who have been in any way practically connected with bakeries well know how large this loss is, and how important it is that it should be taken into account, that our calculations may be correct.

"One of the strongest proofs that the escape of gas through ordinary soft bread dough is very large arises from the fact, that when biscuit dough, in which there is a mixture of fatty matter, is prepared by my process, about half the quantity of gas only is needed to obtain an equal amount of *lightness* with dough that is made of flour and water only, the fatty matter acting to prevent the escape of gas from the dough. Other matters will operate in a similar manner—boiled flour, for instance, added in small quantities. But the assumption that light bread is only half aëriform matter is altogether erroneous. Never before has there been so complete a method of testing what proportion the aëriform bears to the solid in light bread as that which my process affords. The mixing vessel at Messrs. Carr and Co.'s works, Carlisle, has an internal capacity of 10 bushels. When 3½ bushels of flour are put into this vessel, and formed into spongy bread dough, by my process, it is quite full. And when flour is mixed with water into paste, the paste measures rather less than half the bulk of the original dry flour. This will therefore represent about 1¾ bushels of *solid* matter expanded into 10 bushels of spongy dough, showing in the *dough* nearly 5 *parts aëriform* to 1 solid; and in all instances, if the baking of this dough has not been accomplished so as to secure the loaves to 'spring' to at least *double* their size in the oven, they have always come out heavy bread when compared with the ordinary fermented loaves. This gives the relative proportion of aëriform to solid in light bread at least as 10 to 1, and at once raises the loss by fermentation from 1 to 10 per cent., without taking into account the loss of gas by its passage through the mass of dough.

"Of the quality and properties of the bread manufactured by my process, there will shortly be ample means of judging. I may be allowed, however, here to state, what will be evident to all, that the absence of everything but flour, water, and salt, must render it absolutely pure;—that its sweetness cannot be equalled except by bread to which sweet materials are superadded;—that, unlike all other unfermented bread, it makes excellent toast; and, on account of its high absorbent power, it makes the most delicious sop puddings, &c., and also excellent poultice. Sop pudding and poultice made from this bread, however, differ somewhat from those made from fermented bread, in being somewhat richer or more glutinous. This arises from the fact of the gluten not having been changed, or rendered soluble, in the manner caused by fermentation; but that this is a good quality rather than a bad one is evident from the fact, that the richer and purer fermented bread is, the more glutinous are the sop, &c., made from it; and the poorer and more adulterated with alum it is, the freer the sop, &c., are of this quality."

Such then is Dr. Dauglish's plan, and it is impossible to deny that it possesses great ingenuity.

From the fact that, in all his experiments at Carlisle, Dr. Dauglish invariably made 118 loaves from the same weight of flour which, by fermentation, made only 105 or 106, to argue that the *gain over fermentation* can only be equal *to the loss by fermentation*, is to draw a somewhat hasty conclusion; for the gain may be, and is probably due, not to the preservation in the bread of what is generally lost by fermentation, but simply to a retention of water.

It is of course certain that the production of the porosity required in bread produced by the carbonic acid and alcohol evolved by fermentation, entails the loss of a portion of the valuable constituents of the flour, but the amount of that loss should not be estimated, I think, from the proportions which the aëriform bear to the solid matter of the loaf *after it is baked.*

In effect, the fermentation induced in bread differs from that produced at the distillery, in as much as, instead of the fermenting material being sheltered from the air by an atmosphere of carbonic acid, the dough is on the contrary thoroughly permeated by, and retains a considerable quantity of atmospheric air introduced into it by the kneading process, and owing to the presence of which, in fact, the acetous fermentation is carried on to a certain extent, within the dough, simultaneously with the alcoholic fermentations, so that even the 10 parts of aëriform matter to 1 of solid matter in a quartern loaf, are not altogether carbonic acid resulting from the fermentation, but are carbonic acid from that source mixed with the atmospheric air with which the

Digitized by Google

dough is permeated. On the other hand, the aëriform matter thus imprisoned in the dough, expands to at least twice its volume when exposed to the temperature of the oven, and accordingly the bread after breaking becomes as bulky again as the dough from which it was made, and this doubling of the volume being due to the expansion of the gases, and not to the fermentation, bears no proportion whatever to the amount of the sugar of the flour employed in the production of the alcohol and carbonic acid evolved. Moreover, as a quartern loaf, for example, measures about 9 inches by 6·5 inches by 5 inches, making a total of about 292 cubic inches, if we take nine-tenths of that to be aëriform matter, we have 262·8 inches as the aëriform cubic contents of the quartern loaf.

It is ascertained beyond doubt by numerous experiments, that genuine, properly manufactured new bread contains, on an average, 42·5 per cent. of water, and 57·5 of flour, and consequently a quartern loaf weighing really four pounds, would consist of 11,900 grains of water and 16,000 grains of solid matter, 422·5 grains of which are salt and inorganic matter, the rest, 15677·5 grains, being starch and gluten. Now a quartern loaf measuring about 9 × 6·5 × 5 inches gives a total of 292 cubic inches. Assuming with Dr. Dauglish, nine-tenths of that to be aëriform matter, we have 262·8 inches as the aëriform cubic contents of a quartern loaf, but as the gases expanded in the dough to double their volume during its being baked into a loaf, we must divide by 2 the 262·8 inches above alluded to, which gives 131 4 as the number of cubic inches of aëriform matter contained in the dough before it went into the oven. Again, assuming with Dr. Dauglish that these 131·4 cubic inches consist altogether of carbonic acid resulting from the fermentation of the flour, they would represent in weight only 62 grains of that gas, and as 1 equivalent = 198 of sugar produces 4 equivalents = 88 of carbonic acid, it follows that, at most, about 140 grains of sugar or solid matter out of the 15677·5 of flour in the quartern loaf would have disappeared, which loss is less than 1 per cent., from which, however, it is necessary to make a considerable reduction, since a large quantity of air is mixed with that carbonic acid, and expanded with it in the oven. Unless, therefore, it can be satisfactorily proved that the unfermented bread manufactured by Dr. Dauglish's process is more nutritious, weight for weight, or more digestible, or possesses qualities which fermented bread has not, or is sold at a reduced price proportionate to the quantity of water thus locked up and passed off for bread, the benefits and advantages will be all on the manufacturer's side, but the purchasers of the unfermented bread will make but a poor bargain of it.

Of all the operations connected with the manufacture of bread, the most laborious, and that which calls most loudly for reform, is that of kneading. The process is usually carried on in some dark corner of a cellar, where the temperature is seldom less than 60° F., and frequently more; by a man, stripped naked down to the waist, and painfully engaged in extricating his fingers from a gluey mass into which he furiously plunges alternately his clenched fists, heavily breathing as he, struggling, repeatedly lifts up the bulky and tenacious mass in his powerful arms, and with effort flings it down again with a groan fetched from the innermost recesses of his chest, and which almost sounds like an imprecation.

We know, on very good and unexceptionable authority, that a certain large bakery on the borders of a canal actually pumped the water necessary for making the dough directly and at once from the canal, and this from a point exactly contiguous to the dischargings of the cesspool of that bakery? And let us not imagine that this is a solitary instance of horrible filth. The following memoranda recorded by Dr. Wm. A. Guy, in his admirable lecture on "The Evils of Night-work and Long Hours of Labour," delivered on Thursday, July 6, 1848, at the Mechanics' Institution, Southampton Buildings, will serve to illustrate the condition of the bakehouses:—

1. Underground, two ovens, no daylight, no ventilation, very hot and sulphurous.
2. Underground, no daylight, two ovens, very hot and sulphurous, low ceiling, no ventilation but what comes from the doors. Very large business.
3. Underground, no daylight, often flooded, very bad smells, overrun with rats, no ventilation.

After mentioning several other establishments in the same, or even in a worse, condition than those just enumerated, Dr. Guy adds—

"The statements comprised in the foregoing memoranda are in conformity with my own observations. Many of the basements in which the business of baking are carried on are certainly in a state to require the assistance of the Commissioners of Sewers, and to invite the attention of the promoters of sanitary reform."

If we reflect that bread, like all porous substances, readily absorbs the air that surrounds it, and that, even under the best conditions, it should never, on that account, be kept in confined places, what must be the state of the bread manufactured

Digitized by Google

in such a villanous manner, and with a slovenliness greater than it is possible for our imagination to conceive? What can prove better the necessity of Government supervision than such a fact? The heart sickens at the revolting thought, but after all there is really but little difference between the particular case of the bakery on the border of a canal above alluded to, and the mode of kneading generally pursued, and to which we daily submit.

In the sitting of the Institute of France, on the 23rd of January, 1850, the late M. Arago presented and recommended to the Académie the kneading and baking apparatus of M. Rolland, then a humble baker of the 12th Arrondissement, which, it would appear, fulfils all the conditions of perfect kneading and baking.

"The kneading machine (*pétrin mécanique*) of M. Rolland," says Arago, "is extremely simple, and can be easily worked, when under a full charge, by a young man from 15 to 20 years old: the necessity for horse labour or steam power may thus be obviated. The machine (*figs.* 239 to 242) consists of a horizontal axis traversing a trough containing all the dough requisite for one baking batch, and upon which axis a system of curvilinear blades, alternately long and short, are placed in such a manner that, while revolving, they describe two quarters of cylindrical surfaces with contrary curves, so that the convexity of one of these surfaces, and the concavity of the other, is turned towards the bottom of the trough. The axis has a fly wheel, and is set in motion by two small cog-wheels connected with the handle, as represented in the following figures:—

239

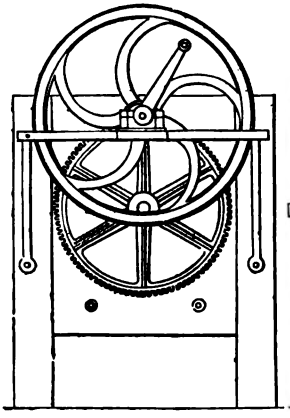

240

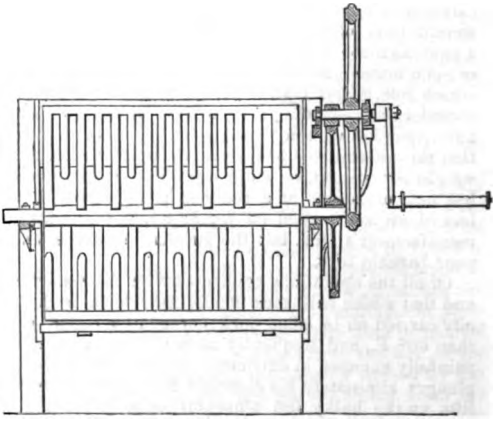

241

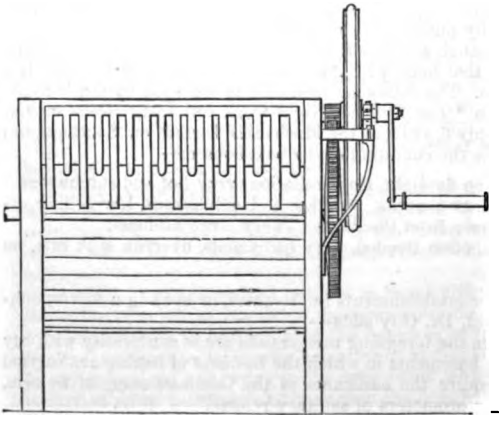

242

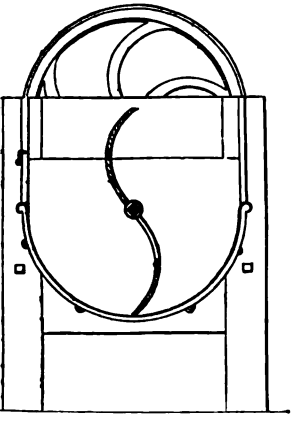

The action of the kneading machine is both easy and efficacious. In 20, and if necessary in 15, or even 10 minutes, a sack of flour may be converted into a perfectly

Digitized by Google

homogeneous and aërated dough, without either lumps or clods, and altogether superior to any dough than could be obtained by manual kneading. The time required in kneading varies according to the greater or less density of dough required; and the quantity of dough manufactured in that space of time varies, of course, also with the dimensions of the kneading-trough; for instance, in the trough provided with 16 blades, one sack and a half of flour can be kneaded at once; in that of 14 blades one sack, and in that of 12 blades two-thirds of a sack.

M. Rolland gives the following instructions for the use of the machine, in order to impart to the dough the qualities produced by the operations known in France under the names of *frasage*, *contrefrasage*, and *soufflage*, which we shall presently describe, and to which the bread manufactured in that country mainly owes, in the words of Dr. Ure, "a flavour, colour, and texture, never yet equalled in London."

The necessary quantity of leaven or yeast is first diluted with the proper quantity of water, as described before; and in order to effect the mixture, the crank should be made to perform 50 revolutions alternately from right to left.—*Frasage* is the first mixture of the flour with the water. The flour is simply poured into the kneading-trough, or, better still, when convenience permits it, it is let down from a room above through a linen hose, which may be shut by folding it up at the extremity.

Three-fourths only of the flour should at first be put into the trough; the first revolutions of the kneader should be rather rapid, but during the remainder of the operation the turning should be at the rate of about two or three revolutions a minute, according to the density of the dough to be prepared. The dough thereby having time to be well drawn out between the blades, and to drop to the bottom of the trough. From 24 to 36 revolutions of the crank will generally be sufficient; but in order to obtain the dough in the condition which the *frasage* would give it in the usual way, it will be necessary to make about 250 revolutions of the crank alternately from right to left, about the same number of turns.

Contrefrasage is the completion of the process of mixing; and, in order to perform that operation, the last fourth part of the flour must now be added, the crank turned 150 revolutions, to wit, 75 turns rather slowly, alternately from right to left, and the remainder at the rate of speed above mentioned.

The operation of *Soufflage* consists in introducing and retaining air in the paste. To effect this, the kneader should be made to perform, during nearly the whole time occupied in the operation, an almost continual motion backwards and forwards, by which means the dough is shifted from place to place; five revolutions being made to the right, and five to the left, alternately, taking care to accelerate the speed a little at the moment of reversing the direction of the revolving blades.

All these operations are accomplished in twenty or twenty-five minutes.

Of course, the reader should not imagine that these numbers must be strictly followed, they are given merely as a guide indicative of the *modus operandi*.

The kneading being completed, the dough is left to rest for some time, and then divided into lumps, of a proper weight, for each loaf. The workman takes one of these lumps in each hand, rolls them out, dusts them over with a little flour, and puts each of them separate in its *panneton*; he proceeds with the rest of the dough in the same manner, and leaves all the lumps to swell, which, if the flour have been of good quality, will take place at a uniform rate. They are then fit for baking, which operation will be described presently.

Another kneading trough, said to be very effectual, is that for which Mr. Edwin Clayton obtained a patent in August, 1830. It consists of a rotatory kneading trough, or rather barrel, mounted in bearings with a hollow axle, and of an interior frame of cast iron made to revolve by a solid axle which passes through the hollow one; in the frame there are cutters diagonally placed for kneading the dough. The revolving frame and its barrel are made to turn in contrary directions, so as greatly to save time and equalise the operation. This double action represents kneading by the two hands, in which the dough is inverted from time to time, torn asunder, and reunited in every different form. The mechanism will be readily understood from the following description.

Fig. 243 exhibits a front elevation of a rotatory kneading trough, constructed according to improvements specified by the patentee, the barrel being shown in section; *a* is the barrel, into which the several ingredients, consisting of flour, water, and yeast, are put, which barrel is mounted in the frame-work *b*, with hollow axles *c* and *d*, which hollow axles turn in suitable bearings at *e*; *f* is the revolving frame which is mounted in the interior of the barrel *a*, by axles *g* and *h*. The ends of this revolving frame are fastened or braced together by means of the oblique cutters or braces *i*, which act upon the dough when the machine is put in motion, and thus cause the operation of kneading.

Either the barrel may be made to revolve without the rotatory frame, or the rota-

Digitized by Google

tory frame without the barrel, or both may be made to revolve together, but in opposite ways. These several motions may be obtained by means of the gear-work, shown at *k*, *l*, and *m*, as will be presently described.

243

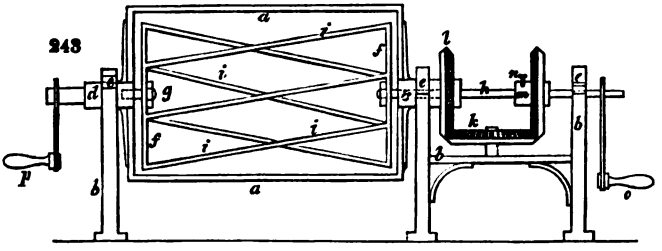

If it be desired to have the revolving motion of the barrel and rotatory frame together, but in contrary directions, that motion may be obtained by fastening the hollow axle of the wheel *m*, by means of a screw *n*, to the axle *h* of the rotatory frame *f* tight, so as they will revolve together, the other wheels *k* and *l* being used for the purpose of reversing the motion of the barrel. It will then be found that by turning the handle *o*, the two motions will be obtained.

If it be desired to put the rotatory frame *f* only into motion, that action will be obtained by loosening the screw *n* upon the axle of the wheel *m*, when it will be found that the axle *h* will be made to revolve freely by means of the winch *o*, without giving motion to the wheels *k*, *l*, and *m*, and thus the barrel will remain stationary. If the rotatory action of the barrel be wanted, it will be obtained by turning the handle *p*, at the reverse end of the machine, which, although it puts the gear at the opposite end of the barrel into motion, yet as the hollow axle of the wheel *m* is not fastened to the axle *h* by the screw *n*, these wheels will revolve without carrying round the frame *f*.

The Hot-water Oven Biscuit-baking Company possesses also a good machine with which 1 cwt. of biscuit dough, or 2 cwts. of bread dough, can be perfectly kneaded in 10 minutes. The machine is an American invention, and of extraordinary simplicity, for it is in reality nothing more than a large corkscrew, working in a cylinder, by means of which the dough is triturated, squeezed, pressed, torn, hacked, and finally agglomerated as it is pushed along. The dough as it issues from that machine can at once be shaped into loaves of suitable size and dimensions. A machine capable of doing the amount of work alluded to does not come to more than from 6*l.* to 7*l.*; the other forms of kneading machines are likewise inexpensive, so that, in addition to the economy of time which they realise, there does not seem to be any excuse for retaining the abomination of manual kneading.

Among superior and very desirable apparatus for bread-making, there are at any rate three which fulfil the desiderata above alluded to, in the most complete and economical manner. One of them is M. Mouchot's aërothermal bakery; the second is A. M. Perkins' hot-water oven; the third is Rolland's hot-air oven, with revolving floors: all three are excellent.

Before proceeding to explain them, a plan and longitudinal section of an ordinary

244

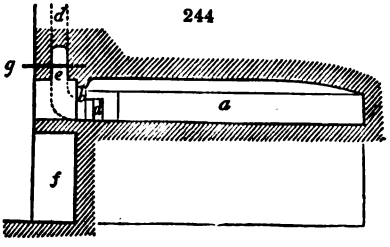

245

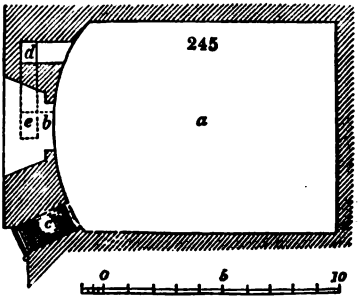

London baker's oven is given (*figs.* 244 and 245), that the reader may be the better able to judge of the vast improvement realised by the other ovens.

a, the body of the oven; *b*, the door; *c*, the fire-grate and furnace; *d*, the smoke

Digitized by Google

flue; *e*, the flue above the door, to carry off the steam and hot air, when taking out the bread; *f*, recess below the door, for receiving the dust; *g*, damper plate to shut off the steam flue; *h*, damper plate to shut off smoke flue, after the oven has come to its proper heat; *i*, a small iron pan over the fire-place *c*, for heating water; *k*, ash-pit below the furnace.

246

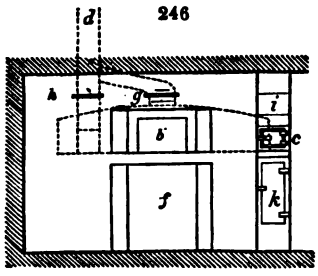

Fig. 246 is the front view; the same letters refer to the same object in all the figures.

The flame and burnt air of the fire at *c*, sweep along the bottom of the oven by the right hand side, are reflected from the back to the left hand side, and thence escape by the flue *d*. Whenever the oven has acquired the proper degree of heat, the fire is withdrawn, the flues are closed by the damper plates, and the lumps of fermented dough are introduced.

We shall now give a description not only of the oven, but of the improved bakery, *boulangerie perfectionnée*, of M. Mouchot.

Fig. 247 is a ground plan of the aërothermal bakehouse: the granaries being in the upper storeys, are not shown here. *b b* are the ovens; *c*, the kneading machine; *d*, the place where the machinery is mounted for hoisting up the bread into the store room above; *e*, a space common to the two ovens, into which the hot air passes; *f*, the place of a wheel driven by dogs, for giving motion to the kneading machine.

247

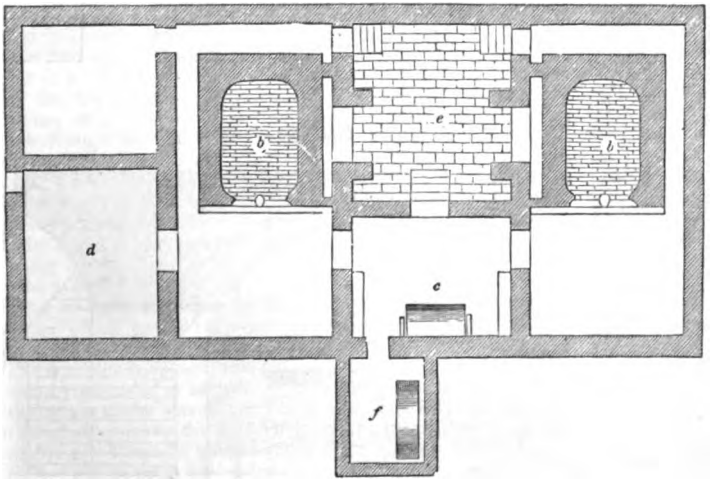

Fig. 248 is a longitudinal section of the oven; A, the grate where coke or even pit-coals may be burned; B B, void spaces which, becoming heated, serve for warming small pieces of dough in; *c c* are flues for conducting the smoke, &c., from the fire-place; D, seen in *fig.* 249, is the chimney for carrying off the smoke transmitted by the flues; E E, void spaces immediately over the flues, and beneath the sole F F, of the oven. By this arrangement the air, previously heated, which arrives from the void spaces B through the flues *c c*, gets the benefit of the heat of the flame which circulates in these flues, and, after getting more heated in the spaces E E, ascends through channels into the oven F F, upon the sole of which the loaves to be baked are laid. The hot air is admitted into it through the passages *a a*, being drawn from the reservoirs B B B, and also by the passage *d d*, drawn from the reservoirs E E. The sole is likewise heated by contact with the hot air contained in the space E E, placed immediately below it. The hot air, loaded with moisture, issues by the passage *b b*, and returns directly into the reservoir B B. G G, an enclosed space directly over the oven, to obstruct the dissipation of its heat; *g*, vault of the fire-place. *Fig.* 249, a transverse section through the middle of the oven. *Fig.* 250, the kneading-machine, a longitudinal section passing through its axis; P P, the contour of the machine, made of wood, and divided into three compartments for the reception of the dough. The

Digitized by Google

wooden bars *o o* are so placed in the interior of the compartments, as to divide the dough whenever the cylinder is made to revolve. One portion, D, of the cylinder may

248

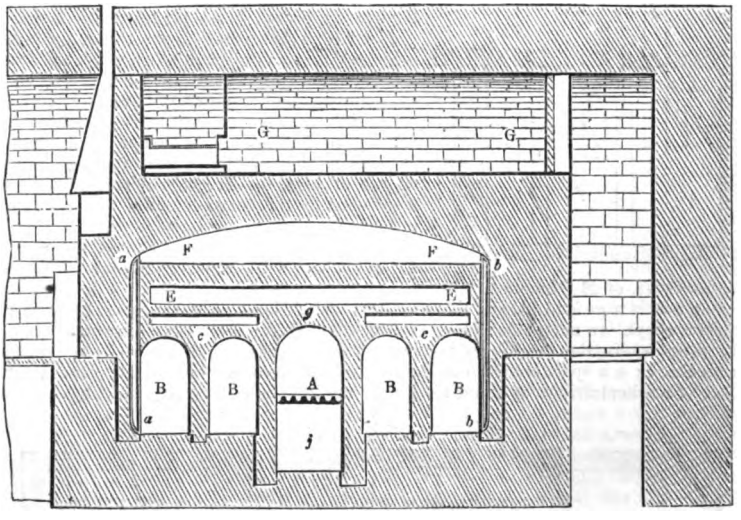

249

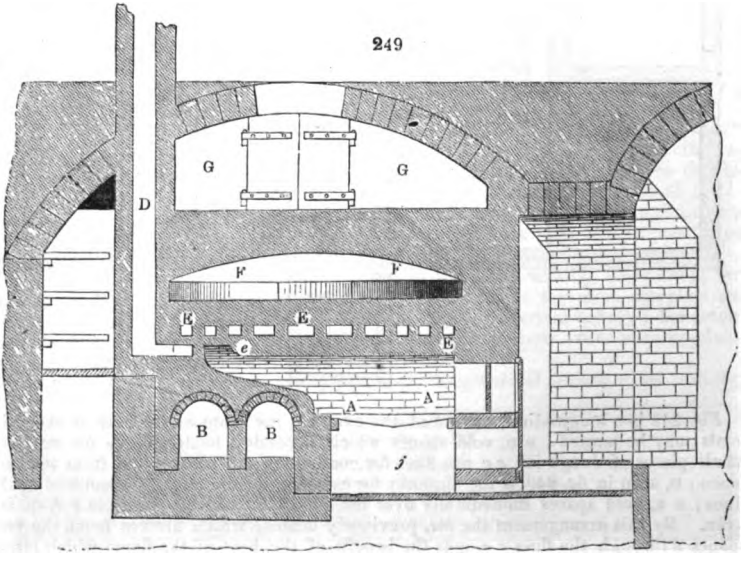

be opened and laid over upon the other by means of a hinge joint, when the dough and flour are introduced. A, B, C, the three compartments of the machine, two for making the dough, and one for preparing the sponge, called *levain*, or leaven, by the French. *a a* is the pulley which receives its motion from the engine, and transmits it to the cylinder through the pinion *b*, and the spur-wheel *e*; *d d*, the fly-wheel to regulate the motion; *g*, a brake to act upon the fly *d*, by means of a lever *h*; *i*, the pillar of the fly-wheel. There is a ratchet-wheel counter for numbering the turns of the kneading machine, but it cannot be shown in this view; *n*, cross bars of wood, which are easily removed when the cylinder is opened; they divide the dough.

Each of the three compartments of the *kneader* (*fig.* 250) is furnished at pleasure

Digitized by Google

with two bars fixed crosswise, but which may be easily removed, whenever the cylinder is opened. These bars constitute the sole agents for drawing out the dough. In a

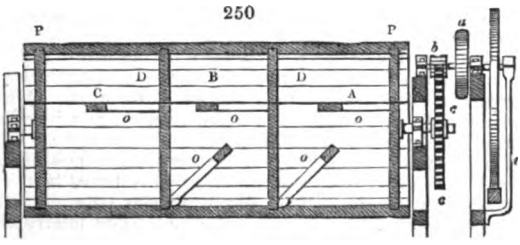

continuous operation, the leaven is constantly prepared in the compartment A; with which view there is put into it —

125	kilogrammes	of	ordinary	leaven or yeast.
67	„	-	-	- flour.
33	„	-	-	- water.

In all, 225 kilogrammes.

The person in charge of the mechanical kneader shuts down its lid, and sets it a-going. At the end of about 7 minutes he hears the bell of the counter sound, announcing that the number of revolutions has been sufficient to call for an inspection of the sponge, in regard to its consistence. The cylinder is therefore opened, and after verifying the right state of the leaven, and adding water to soften, or flour to stiffen it, he closes the lid, and sets the machine once more in motion. In 10 minutes more the counter sounds again, and the kneading is completed. The 450 kilogrammes of leaven obtained from the two compartments are adequate to prepare dough enough to supply alternately each of the two ovens. For this purpose 75 kilogrammes of leaven are taken from each of the two compartments A and A′, and placed in the intermediate compartment B. The whole leaven is then 75 + 75 = 150 kilogrammes; to which are added 100 kilogrammes of flour and 50 of water = 150, so that the chest contains 300 kilogrammes. There is now replaced in each of the cavities A and A′ the primitive quantity, by adding 50 kilogrammes of flour and 25 of water = 75.

The cylinder is again set a-going; and, from the nature of the apparatus, it is obvious that the kneading takes place at once on the leavens A and A′, and on the paste B; which last is examined after 7 minutes, and completed in 10 more = 17, at the second sound of the counter-bell.

The kneader is opened, the paste on the sides and on the bars is gathered to the bottom by means of a scraper. The whole paste of the chest B being removed, 150 kilogrammes of the leaven are taken, to which 150 kilogrammes of flour and water are added to prepare the 300 kilogrammes of paste destined for the supply of the oven No. 2. These 75 kilogrammes of leaven from each compartment are replaced as before, and so on in succession.

The water used in this operation is raised to the proper temperature, viz. 25° or 30° C. (77° or 86° F.) in cold weather, and to about 68° F. in the hot season, by mixing common cold water with the due proportion of water maintained at the temperature of about 160° F., in the basin F, placed above the ovens.

Through the water poured at each operation upon the flour in the compartment B, there is previously diffused from 200 to 250 grammes of fresh leaven, as obtained from the brewery, after being drained and pressed (*German yeast*). This quantity is sufficient to raise properly 300 kilogrammes of dough. As soon as this dough is taken out of the kneader, as stated above, and while the machine goes on to work, the quantity requisite for each loaf is weighed, turned about on the table D, to give it its round or oblong form, and there is impressed upon it with the fore-arm, or roller, the cavity which characterises cleft loaves. All the lots of dough of the size of one kilogramme, called cleft loaves (*pains fendus*), are placed upon a cloth, a fold of which is raised between two loaves, the cloth being first spread upon a board; which thus charged with 10 or 15 loaves is transferred to the wooden shelves G G, in front of the oven. The whole of them rise easily under the influence of the gentle temperature of this antechamber or *fournil*. Whenever the dough loaves are sufficiently raised here, they are put into the oven, a process called *enfournement* in France; which consists in setting each loaf on a wooden shovel dusted with coarse flour, and placing it

Digitized by Google

thereby on the sole of the oven, close to its fellow, without touching it. This operation is made easy, in consequence of the introduction of a long-jointed gas pipe and burner into the interior of the oven, by the light of which all parts of it may be minutely examined. The oven is first kept moderately hot, by shutting the dampers; but whenever the thermometer attached to it indicates a temperature of from 300° to 290° C. (572° to 554° F.), the dampers or registers are opened, to restore the heat to its original degree, by allowing of the circulation of the hot air, which rises from the lower cavities around the fire-place into the interior of the oven. When the baking is completed, the gas-light, which had been withdrawn, is again introduced into the oven, and the bread is taken out; called the process of *défournement*. If the temperature have been maintained at about 300° C., the 300 kilogrammes of dough, divided into loaves of one kilogramme (2¼ lbs. avoirdupois), will be baked in 27 minutes. The charging having lasted 10 minutes, and the discharging as long, the baking of each batch will take up 47 minutes. But on account of accidental interruptions, an hour may be assigned for each charge of 260 loaves of 1 kilogramme each; being at the rate of 6240 kilogrammes (or 6·75 tons) of bread in 24 hours.

Although the outer parts of the loaves be exposed to the radiation of the walls, heated to 280° or 300° C., and undergo therefore that kind of caramelisation (charring) which produces the colour, the taste, and the other special characters of the crust, yet the inner substance of the loaves, or the crumb, never attains to nearly so high a temperature; for a thermometer, whose bulb is inserted into the heart of a loaf, does not indicate more than 100° C. (212° F.)

Perkins' hot-water oven is an adaptation of that distinguished engineer's stove, which, as is well known, is a mode of heating by means of pipes full of water, and hermetically closed; but with a sufficient space for the expansion of the water in the pipes. As a means of warming buildings the invention has already produced the very beneficial effects which have gained for it an extensive patronage. There is no doubt but that this novel application entitles the inventor to the warmest thanks of the public. The following figure (251), represents one of these ovens. A, stove; B, coil of iron pipe placed in the stove; C C, flowpipe; D, expansive tube; E, oven charged with loaves, and surrounded with the hot-water pipes; F, return hot-water pipe; G, door of the oven; H, flue for the escape of the vapours in the oven; I, rigid bar of iron supporting the regulating box; J J, regulating box containing three small levers; K, nut adjusted so that if temperature of the hot-water pipe is increased beyond the adjusted point, its elongation causes the nut to bear upon the levers in the box J, which levers, lifting the straight rod L, shut the damper M of the stove; N is an index indicating the temperature of the hot-water pipes.

251

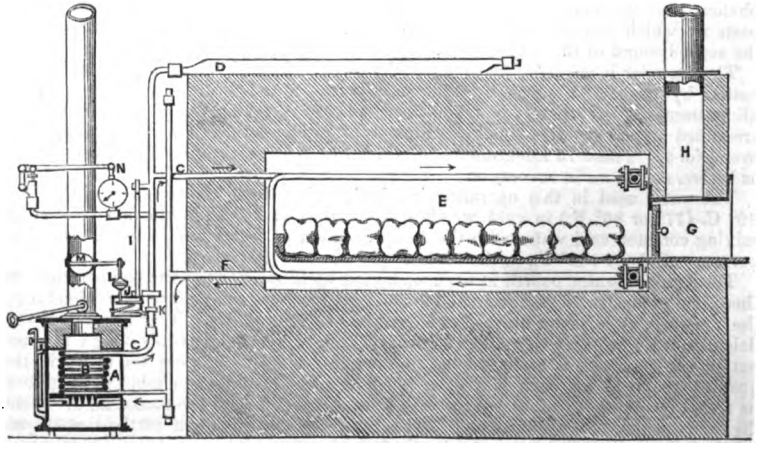

The oven is first built in the ordinary manner of sound brickwork, made very thick in order to retain the heat. Then the top and bottom of the internal surfaces are lined with wrought-iron pipes of one inch external diameter, and five-eighths of an inch internal diameter, and their surface amounts, in the aggregate, to the whole surface of the oven. These pipes are then connected to a coil in a furnace outside the oven. The coil having such a relative proportion of surface to that which is in

Digitized by Google

the oven, that the pipes may be raised to a temperature of 550° F., and no more. This fixed and uniform temperature is maintained by a self-regulating adjustment peculiar to this furnace, which works with great precision, and which cannot get out of order, since it depends upon the expansion of the upper ascending pipe close to the furnace acting upon three levers connected with the damper which regulates the draught. The movable nut at the bottom of that expanding pipe being adjusted to the requisite temperature, that precise temperature is uniformly retained. The smallest fluctuation in the heat of the water which circulates in the pipes instantly sets the levers in motion, and the expansion of one-thirty-sixth part of an inch is sufficient to close the damper.

It will be observed that if the pipes be heated to 550° F. the brickwork will soon attain the same temperature, or nearly so, and accordingly the oven will thus possess double the amount of the heating surface of ordinary ovens applicable to baking. The baking temperature of the oven is from 420° to 450° F., which is ascertained by a thermometer with which the oven is provided.

With respect to Rolland's oven, Messieurs Boussingault, Payen, and Poncelet, in their report to the Institute of France; Gaultier de Glaubry, in a report made in the name of the Committee of Chemical Arts to the Société d'Encouragement; and the late M. Arago, represented that oven as successfully meeting all the conditions of salubrity, cleanliness, and hygiène. Wood, coals, ashes, are likewise banished from it, and neither smoke nor the heated air of the furnace can find access to it. As in Perkins', the furnace is placed at a distance from the mouth of the oven, but instead of conveying the heat by pipes, as in the hot-water oven, it is the smoke and hot air of the furnace which, circulating through fan-shaped flues, ramifying under the floor and spreading over the roof of the oven, impart to it the requisite temperature. The floor of the oven, on which the loaves are deposited, consists of glazed tiles, and it can thus be kept perfectly clean. The distinctive character of M. Rolland's oven, however, is that the glazed tiles just spoken of rest upon a revolving platform which the workman gradually, or from time to time, moves round by means of a small handle, and without effort.

Figures 252 to 261 represent the construction and appearance of M. Rolland's oven on a reduced scale.

252. Front elevation.
253. Vertical section through the axis of the firegrate.
254. Ditto, ditto.
255. Elevation of one of the vertical flues.
256. Suspension of the floors.
257. Plan of the first floor.
258. Plan of the sole.
259. Plan of the second floor.
260. Plan of the firegrate and flues.
261. Plan of the portion under ground.

252

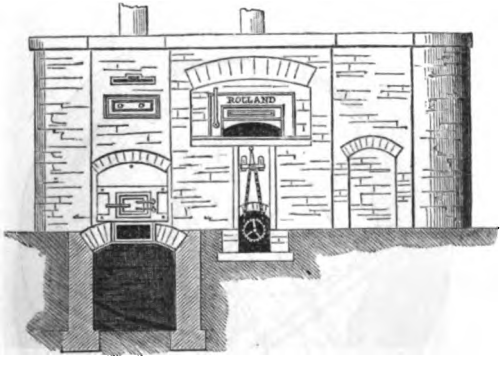

When the oven has to be charged, the workman deposits the first loaves, by means of a short peel, upon that part of the revolving platform which lies before the mouth of the oven, and when that portion is filled, he gives a turn with the handle, and proceeds to put the loaves in the fresh space thus presented before him, and so on until the whole is fitted up. The door is then closed through an opening covered with glass, and reserved in the wall of the oven, which is lighted up with a jet of gas, or by opening the door from time to time the progress of the baking may be watched; if it appears too rapid on one point, or too slow on another, the journeyman can, by

Digitized by Google

means of the handle, bring the loaves successively to the hottest part of the oven, and *vice versâ*, as occasion may require. The oven is provided with a thermometer, and, in an experiment witnessed, the temperature indicated 210° C. = 410° F., the baking

253

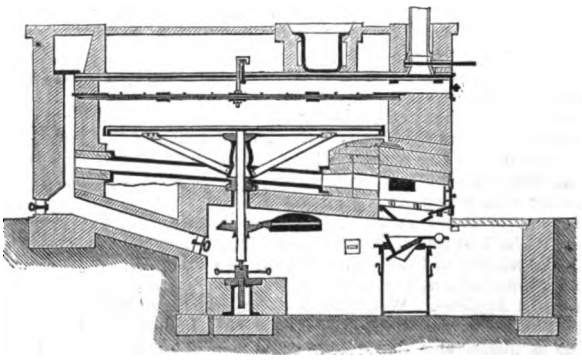

254

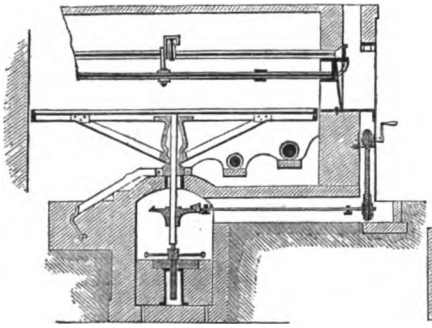

255

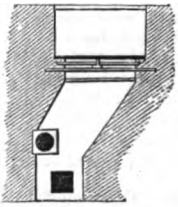

256

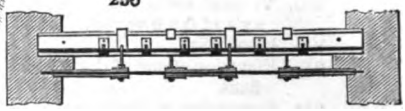

257

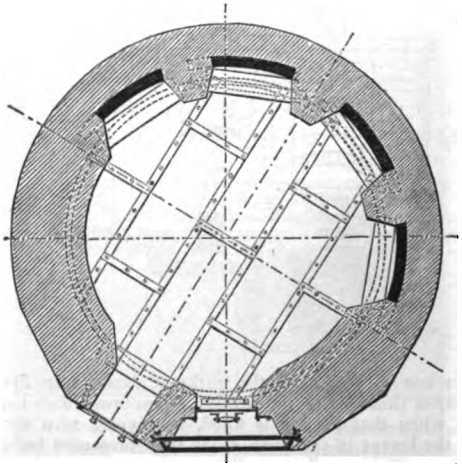

of a full charge was completed in one hour and ten minutes, and the loaves of the same kind were so even in point of size and colour that they could not be distinguished from each other.

Digitized by Google

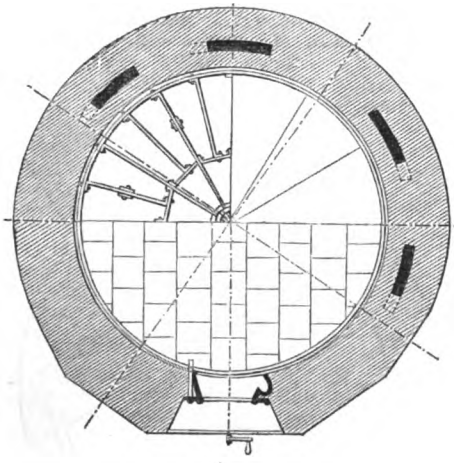

258

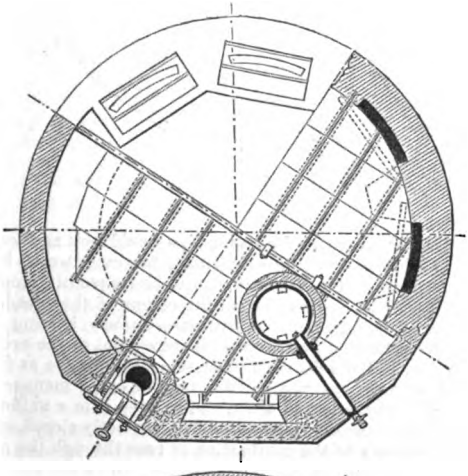

259

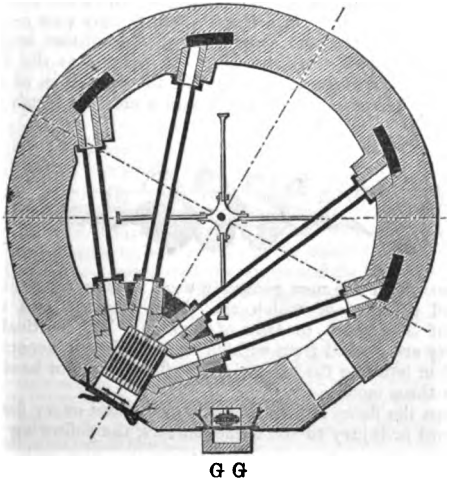

260

Digitized by Google

The top of the oven is provided with a pan for the purpose of heating the water necessary for the preparation of the dough, by means of the heat which in all other plans (Mouchot's excepted) is lost. The workman should take care to keep always

261

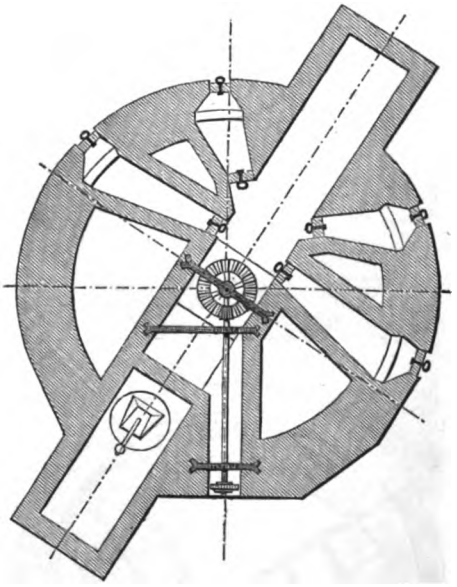

some water in that pan, for otherwise the leaden pipe would melt and occasion dangerous leaks. For this and other reasons the safest plan, however, would be to replace this leaden pipe by an iron one. The said pan should be frequently scoured, for, if neglected, the water will become rusty and spoil the colour of the bread. Bread baking may be considered as consisting of four operations—namely, heating the oven, putting the dough into the oven, baking, and taking the loaves out of the oven. The general directions given by Mr. Rolland for each of these operations are as follows :—

In order to obtain a proper heat and one that may be easily managed, it is necessary to charge the furnace moderately and often, and to keep it in a uniform state.

When the fire is kindled, the door should be kept perfectly closed, in order to compel the current of air necessary to the combustion to pass through the grate, and thence through the flues under and the dome over the oven. If, on the contrary, the furnace door were left ajar, the cold air from without would rapidly pass over the coals without becoming properly heated, and passing in that condition into the flues would fail in raising it to the proper temperature. In order that the flame and heated products of the combustion may pass through all the flues, it is, of course, necessary to keep them clear by introducing into them once a month a brush made of wire, or

262

whalebone, or those which are now generally used for sweeping the tubes of marine tubular boilers, and the best of which are those patented and manufactured by Messrs. Moriarty of Greenwich, or How of London. The vertical flues which are built in the masonry are cleared from without or from the pit, according to the nature of the plan adopted in building the oven. These flues need not be cleaned more often than about once in three months.

Sweeping between the floors should be performed about every fortnight.

In case of accident or injury to the thermometers, the following directions, which

Digitized by Google

indeed apply to all ovens, may enable the baker to judge of the temperature of his oven. If on throwing a few pinches of flour on the tiles of the oven it remains white after the lapse of a few seconds, the temperature is too low; if, on the contrary, the flour assumes a deep brown colour, the temperature is too high; if the flour turns yellowish, or looks slightly scorched, the temperature is right.

The baking in Rolland's oven takes place at a temperature varying from 410 to 432 F. according to the nature and size of the articles intended to be baked. During the baking, the revolving floor is turned every ten or twelve minutes, so that the loaves not remaining in the same place the baking becomes equal throughout.

As to the hot-water oven, two establishments only have as yet adopted it in England; one of them is the "Hot-water Oven Biscuit-baking Company," on whose premises fancy buiscuits only are baked; the second establishment is that of a baker of the name of Neville, carrying on his business in London. With respect to M. Mouchot's system, it is not even known in this country, otherwise than by having been alluded to in one or two technological publications or dictionaries.

The quantity of bread which can be made from a sack of flour depends to a great extent upon the quantity of gluten that the flour of which it is made contains, but the wheat which contains a large proportion of nitrogenous matter does not yield so white a flour as those which are poorer. From a great number of determinations it is found that the amount of gluten contained in the flour to make best white bread ranges from 10 to 18 per cent., that of the starch being from 63 to 70 per cent., the ashes ranging from 0·5 to 1·9 per cent.

This day (17th of March, 1858) the sack of genuine best household flour, weighing 280 lbs., delivered at the baker's shop, costs 42*s.*, and the number of sacks of flour converted weekly into bread by the London bakers is nearly 30,000, which gives about 12 sacks of flour per week as the average trade of each of them. The average capital of a baker doing that amount of business may be computed at 300*l.*, which at 5 per cent. gives 15*l.* interest; his rent may be estimated at about 55*l.*, and the rates, taxes, gas, and other expenses at about 25*l.*, in all 95*l.*, or very nearly 1*l.* 16*s.* 6½*d.* per week, which sum divided by 12 would give 3*s.* 0½*d.* per sack.

In the ordinary plan of bread making, London bakers reckon that 1 sack of such a flour, weighing 280 lbs., will make 90 real 4-lb. loaves (not quartern) of pure genuine bread, although a sack of such flour may yield him 94 or even 95 quartern (not 4-lb.) loaves.*

From this account it may be easily imagined that if the baker could succeed in disposing at once of all the loaves of his day's baking either by sale at his shop, or, still better, by delivery at his customers' residences, such a business would indeed be a profitable one commercially speaking, for on that day he would sell from 28 to 34 lbs. of water at the price of bread, not to speak of the deficient weight: but, on the one hand, so many people provokingly require to have their loaves weighed at the shop, and are so stingily particular about having their short weight made up; and, on the other hand, the loaves, between the first, second, and third day, do so obstinately persist in letting their water evaporate, that the loss of weight thus sustained nearly balances the profit obtained upon the loaves sold on the first day at the shop, or to those customers who have their bread delivered at their own door, to those who the baker knows, from position or avocations, will never take the trouble to verify the weight of his loaves, and who, he says, are *gentlefolks, and no mistake about it.*

As to those bakers who, by underbaking, or by the use of alum, or by the use of both alum and underbaking, manage to obtain 96, 98, 100, or a still larger number of loaves from inferior flour, or materials, their profit is so reduced by the much lower price at which they are compelled to sell their sophisticated bread, that their tamperings avail them but little; their emphatically hard labour yields them but a mere pittance, except their business be so extensive that the small profits swell up into a large sum, in which case they only jeopardise their name as fair and honest tradesmen.

Looking now at the improved ovens, of which we have been speaking merely in an economical point of view, and abstractedly from all other considerations, the profits realised by their use appears to be well worth the baker's attention. But as with the improved ovens the economy bears upon the wages and the fuel, the advantages are much less considerable in a small concern than in a large one. Thus the economy which, upon 12 sacks of flour per week, would scarcely exceed 20 shillings upon the whole,

* It is absolutely necessary thus to establish a distinction between four pounds and quartern loaves, because the latter very seldom indeed have that weight, and this deficiency is, in fact, one of the profits calculated upon; for although the Act of Parliament (Will. IV. cap. xxxvii.) is very strict, and directs (sect. vii.), that bakers delivering bread by cart or carriage shall be provided with scales, weights, &c., for weighing bread, this requisition is seldom, if ever, complied with.

There are of course a few bakers whose quartern loaves weigh exactly four pounds, but the immense majority are from four to six ounces short.

Digitized by Google

would, on the contrary, assume considerable proportions in establishments baking from 50 to 100 sacks per week. We give here the following comparative statements of converting flour into bread at the rate of 70 sacks per week, from documents which may be fully relied upon. 70 sacks of flour manufactured into genuine bread, in the ordinary way, would yield 6300 real 4-lb. loaves, and the account would stand as follows, taking 90 loaves, weighing really 4 lbs., as the ultimate yield of 1 sack of good household flour, of the quality and price above alluded to:—

By the Ordinary Process.

RETURNS.

	£	s.	d.
6300 loaves (4 lbs.) at 7*d.*	183	15	0

EXPENSES.

	£	s.	d.	£	s.	d.
70 sacks of household flour at 37*s.*	129	10	0			
Coals, gas, potatoes, yeast, salt, wages, and other baking expenses, at 5*s.* per sack	17	10	0			
Rent, taxes, interest of capital, and general expenses	24	10	0			
				171	10	0
Net profit on 1 week's baking				£12	5	0

By Perkins's Process.

RETURNS.

	£	s.	d.
6300 loaves (4 lbs.) at 7*d.*	183	15	0

EXPENSES.

	£	s.	d.	£	s.	d.
70 sacks of flour at 37*s.*	129	10	0			
Yeast, potatoes, and salt, at 1*s.* per sack	3	10	0			
Coals at 6*d.* per sack	1	15	0			
Wages of a man per week	1	7	0			
„ 1 workman	1	0	0			
„ 1 hand	0	16	0			
Wear and tear, and repairs	0	4	0			
Rent, interest on capital (1500*l.*), taxes, gas, waste, and general expenses, per week	24	10	0			
				162	12	0
				£21	13	0

In Rolland's process the profits are very nearly the same as in that of Perkins, except the amount of fuel consumed is still more reduced, and does not amount, it is stated, to more than 4½*d.* per sack, which for 70 sacks is 1*l.* 6*s.* 3*d.*, instead of 1*l.* 15*s.*, or 9*s.* difference between the two methods for baking that quantity of flour.

The richness or nutritive powers of sound flour, and also of bread, are proportional to the quantity of gluten they contain. It is of great importance to determine this point, for both of these objects are of enormous value and consumption; and it may be accomplished most easily and exactly by digesting in a water-bath, at the temperature of 167° F., 1000 grains of bread (or flour) with 1000 grains of bruised barley malt, in 5000 grains, or in a little more than half a pint, of water. When this mixture ceases to take a blue colour from iodine (that is, when all the starch is converted into a soluble dextrine), the gluten left unchanged may be collected on a filter cloth, washed, dried at a heat of 212° F., and weighed. The colour, texture, and taste of the gluten ought also to be examined, in forming a judgment of good flour or bread.

The question of the relative value of white and of brown bread, as nutritive agents, is one of very long standing, and the arguments on both sides may be thus resumed.

The advocates of brown bread hold:—

That the separation of the white from the brown parts of wheat grain, in making bread, is likely to be baneful to health;

That the general belief that bread made with the finest flour is the best, and that whiteness is a proof of its quality, is a popular error;

That whiteness may be, and generally is, communicated to bread by alum, to the injury of the consumer;

Digitized by Google

That the miller, in refining his flour, to please the public, removes some of the ingredients necessary to the composition and nourishment of the various organs of our bodies; so that fine flour, instead of being better than the meal, is, on the contrary, less nourishing, and, to make the case worse, is also more difficult of digestion, not to speak of the enormous loss to the population of at least 25 per cent. of branny flour, containing from 60 to 70 per cent. of the most nutritious part of the flour, a loss which, for London only, is equal to at least 7500 sacks of flour annually;

That the unwise preference given so universally to white bread, leads to the pernicious practice of mixing alum with the flour, and this again to all sorts of impositions and adulterations; for it enables the bakers who are so disposed, by adding alum, to make bread manufactured from the flour of inferior grain to look like the best and more costly, thus defrauding the purchaser and tampering with his health.

On the other side, the partisans of white bread contend, *of course*, that all these assertions are without foundation, and their reasons were summed up as follows in the *Bakers' Gazette*, in 1849:—

"The preference of the public for white bread is not likely to be an absurd prejudice, seeing that it was not until after years of experience that it was adopted by them.

"The adoption of white bread, in preference to any other sort, by the great body of the community, as a general article of food, is of itself a proof of its being the best and most nutritious.

"The finer and better the flour, the more bread can be made from it. Fifty-six pounds of fine flour from good wheat will make seventy-two pounds of good, sound, well-baked bread, the bread having retained sixteen pounds of water. But bran, either fine or coarse, absorbs little or no water, and adds no more to the bread than its weight."

And lastly, in confirmation of the opinion that white bread contains a greater quantity of nutriment than the same weight of brown bread, the writer of the article winds up the white bread defence with a portion of the Report of the Committee of the House of Commons, appointed in 1800, "to consider means for rendering more effectual the provisions of 13 Geo. III., intituled 'An Act for the better regulating the assize and making of Bread.'"

In considering the propriety of recommending the adoption of further regulations and restrictions, they understood a prejudice existed in some parts of the country against any coarser sort of bread than that which is at present known by the name of "fine household bread," on the ground that the former was less wholesome and nutritious than the latter. The opinions of respectable physicians examined on this point are,—that the change of any sort of food which forms so great a part of the sustenance of man, might for a time affect some constitutions; that as soon as persons were habituated to it, the standard wheaten bread, or even bread of a coarser sort, would be equally wholesome with the fine wheaten bread which is now generally used in the metropolis; but that, in their opinion, the fine wheaten bread *would go farther* with persons who have no other food than the same quantity of bread of a coarser sort.

It was suggested to them that if only one sort of flour was permitted to be made, and a different mode of dressing it adopted, so as to leave in it the fine pollards, 52 lbs. of flour might be extracted from a bushel of wheat weighing 60 lbs., instead of 47 lbs., which would afford a wholesome and nutritious food, and add to the quantity 5 lbs. in every bushel, or somewhat more than $\frac{1}{9}$th. On this they remarked, that there would be no saving in adopting this proposition; and they begged leave to observe, if the physicians are well founded in their opinions, that bread of coarser quality will not go equally far with fine wheaten bread, an increased consumption of wheaten bread would be the consequence of the measure.

From the baker's point of view, it is evident that all his sympathies must be in favour of the water-absorbing material, and therefore of the fine flour; for each pound of water added and retained in the bread which he sells, represents this day so many twopences; but the purchaser's interest lies in just the opposite direction.

The question, however, is not, in the language of the Committee of the House of Commons of those days, or of the physicians whom they consulted, whether a given weight of wheaten bread *will go farther* than an equal weight of bread of a coarser sort; nor whether a given weight of pure flour is more nutritious than an equal weight of the meal from the same wheat used in making brown bread. The real question is,—*Whether a given weight of wheat contains more nutriment than* THE FLOUR *obtained from that weight of wheat.*

The inquiry of the Committee of the House of Commons, and the defence of white bread *versus* brown bread, resting as it does, in this respect, upon a false ground, is therefore perfectly valueless; for whatever may have been the opinion of respectable

Digitized by Google

physicians and of committees, either of those days or of the present times, one thing is certain—namely, that bran contains only 9 or 10 per cent. of woody fibre, that is, of matter devoid of nutritious property; and that the remainder consists of a larger proportion of gluten and starch, fatty, and other highly nutritive, constituents, with a few salts, and water, as proved by the following analysis by Millon:—

Composition of Wheat Bran.

Starch	52·0
Gluten	14·9
Sugar	1·0
Fatty matter	3·6
Woody „	9·7
Salts	5·0
Water	13·8
	100·0

And it is equally certain that wheat itself—I mean the whole grain—does not contain more than 2 per cent. of unnutritious, or woody matter, the bran being itself richer, weight for weight, in gluten than the fine flour; the whole meal contains, accordingly, more gluten than the fine flour obtained therefrom. The relative proportions of gluten in the whole grain, in bran, and in flour of the same sample of wheat, were represented by the late Professor Johnston to be as follows:—

Gluten of Wheat.

Whole grain	12 per cent.
Whole bran	14 to 18 „
Fine flour	10 „

Now, whereas a bushel of wheat weighing 60 lbs. produces, according to the mode of manufacturing flour for London, 47 lbs.—that is, 78 per cent. of flour, the rest being bran and pollards; if we deduct 2 per cent. of woody matter, and 1¼ per cent. for waste in grinding at the mill, the bushel of 60 lbs. of wheat would yield 58 lbs., or at least 96¾ per cent., of nutritious matter.

It is, therefore, as clear as anything can possibly be, that by using the whole meal instead of only the fine flour of that wheat, there will be a difference of about ⅛th in the product obtained from equal weights of wheat.

In a communication made to the Royal Institute nearly four years ago, M. Mège Mouriès announced that he had found under the envelope of the grain, in the internal part of the perisperm, a peculiar nitrogenous substance capable of acting as a ferment, and to which he gave the name of "céréaline." This substance, which is found wholly, or almost so, in the bran, but not in the best white flour, has the property of liquefying starch, very much in the same manner as diastase; and the decreased firmness of the crumb of brown bread is referred by him to this action. The coloration of bread made from meal containing bran is not, according to M. Mège Mouriès, due, as has hitherto been thought, to the presence of bran; but to the peculiar action of cerealin; this new substance, like vegetable casein and gluten, being, by a slight modification, due perhaps to the contact of the air, transformed into a ferment, under the influence of which the gluten undergoes a great alteration, yielding, among other products, ammonia, a brown-coloured matter analogous to ulmine, and a nitrogenous product capable of transforming sugar into lactic acid. M. Mège Mouriès having experimentally established, to the satisfaction of a committee consisting of MM. Chevreul, Dumas, Pelouze, and Peligot, that by paralysing or destroying the action of cerealin, as described in the specification of his patent, bearing date the 14th of June, 1856, white bread, having all the characters of first-quality bread, may be made, in the language of the said specification, "with using either all the white or raw elements that constitute either corn or rye, or with such substances as could produce, to this day, but brown bread."

Cerealin, according to M. Mège Mouriès, has two very distinct properties:—the first consists in converting the hydrated starch into glucose and dextrine; the second, which is much more important in its results, transforms the glucose into lactic, acetic, butyric, and formic acid, which penetrate, swell up, and partly dissolve the gluten, rendering it pulpy and emulsive, like that of rye; producing, in fact, a series of decompositions, yielding eventually a loaf having all the characteristics of bread made from inferior flour.

In order to convert the whole of the farinaceous substance of wheat into white bread, it is therefore necessary to destroy the cerealin; and the process, or series of

Digitized by Google

processes, by which this is accomplished, is thus described by M. Mège Mouriès in his specification :—

"The following are the means I employ to obtain my new product :—

"1st. The application of vinous fermentation, produced by alcoholic ferment or yeast, to destroy the ferment that I call 'céréaline' existing, together with the fragments of bran, in the raw flour, and which in some measure produces the acidity of brown bread directly whilst it destroys indirectly most part of the gluten.

"2ndly. The thorough purification of the said flour, either raw or mixed with bran, (after dilation and fermentation,) by the sifting and separating of the farinaceous liquid from the fragments of bran disseminated by the millstone into the inferior products of corn.

"3dly. The employing that part of corn producing brown bread in the rough state as issuing from the mill after a first grinding, in order to facilitate its purification by fermentation and wet sifting.

"4thly. The employing an acidulated water (by any acid or acid salt) in order to prevent the lactic fermentation, preserving the vinous fermentation, preventing the yellow colour from turning into a brown colour (the ulmic acid), and the good taste of corn from assuming that of brown bread. However, instead of acidulated water, pure water may be employed with an addition of yeast, as the acid only serves to facilitate the vinous fermentation.

"5thly. The grinding of the corn by means of millstones that crush it thoroughly, increasing thereby the quantity of foul parts, a method which will prove very bad with the usual process, and very advantageous with mine.

"6thly. The application of corn washed or stripped by any suitable means.

"7thly. The application of all these contrivances to wheat of every description, to rye, and other grain used in the manufacture of bread.

"8thly. The same means applied to the manufacture of biscuits.

"I will now describe the manner in which the said improvements are carried into effect.

"First Instance. *When flour of inferior quality is made use of.*—This description of flour, well known in trade, is bolted or sifted at 73, 75, or 80 per cent. (a mark termed *Scipion mark* in the French War Department), and yields bread of middle quality. By applying to this sort of flour a liquid yeast, rather different from that which is applied to white flour, in order to quicken the work and remove the sour taste of bread, a very nice quality will be obtained, which result was quite unknown to everybody to this day, and which none ever attempted to know, as none before me was aware of the true causes that produce brown bread, &c.

"Now, to apply my process to the said flour (of inferior mark or quality) I take a part of the same—a fourth part, for instance—which I dilute with a suitable quantity of water, and add to the farinaceous liquid 1 portion of beer yeast for 200 portions of water, together with a small quantity of acid or acid salt, sufficient to impart to the said water the property of lightly staining or reddening the test-paper, known in France by the name of *papier de tournesol*. When the liquid is at full working, I mix the remaining portions of flour, which are kneaded, and then allowed to ferment in the usual way. The yeast applied, which is quite alcoholic, will yield perfectly white bread of a very nice taste; and I declare that if similar yeast were ever commended before, it was certainly not for the purpose of preventing the formation of brown bread, the character of which was believed to be inherent to the nature of the very flour, as the following result will sufficiently prove it, thus divesting such an application of its industrial appropriation.

"Second Instance. *When raw flour is made use of.*—By raw flour, I mean the corn crushed only once, and from which 10 to 15 per cent. of rough bran have been separated. Such flour is still mixed with fragments of bran, and is employed in trade to the manufacture of so called white flour and bran after a second and third grinding or crushing. Instead of that, I only separate, and without submitting it to a fresh crushing, the rough flour in two parts, about 70 parts of white flour and 15 to 18 of rough or coarse flour, of which latter the yeast is made; this I dilute with a suitable quantity of water, sufficient to reduce the whole flour into a dough, say, 50 per cent. of the whole weight of raw flour. To this mixture have been previously added the yeast and acid, (whenever acid is applied, which is not indispensable, as before stated,) and the whole is allowed to work for 6 hours at a temperature of 77° F. for 12 hours at 68°, and for 20 hours at 59°, thus proportionally to the temperature. While this working or fermentation is going on, the various elements (céréaline, &c.) which by their peculiar action are productive of brown bread, have undergone a modification; the rough parts are separated, the gluten stripped from its pellicles and disaggregated, and the same flour which, by the usual process, could have only produced deep brown bread, will actually yield first-rate bread, far superior to that

Digitized by Google

sold by bakers, chiefly if the fragments of bran are separated by the following process, which consists in pouring on the sieve, described hereafter, the liquid containing the rough parts of flour thus disaggregated and modified by a well-regulated fermentation.

"The sieve alluded to, which may be of any form, and consist of several tissues of different tightness, the closest being ever arranged underneath or the most forward, when the sieve is of cylindrical or vertical form, is intended to keep back the fragments of bran, which would by their interposition impair the whiteness of bread, and by their weight diminish its nutritive power. The sifted liquid is white, and constitutes the yeast with which the white flour is mixed after being separated, so as to make a dough at either a first or several workings, according to the baker's practice. This dough works or ferments very quickly, and the bread resulting therefrom is unexceptionable. In case the whiteness or neatness of bread should be looked upon as a thing of little consequence, a broader sieve might be employed, or even no sieve used at all, and yet a very nice bread be obtained.

"The saving secured by the application of my process is as follows:—By the common process, out of 100 parts of wheat 70 or 75 parts of flour are extracted, which are fit to yield either white or middle bread; whilst, by the improved process, out of 100 parts of wheat 85 to 88 parts will be obtained, yielding bread of superior quality, of the best taste, neatness, and nutritious richness.

"In case new yeast cannot be easily provided, the same should be dried at a temperature of about 86° F., after being suitably separated by means of some inert dust, and previous to being made use of it should be dipped into 10 parts of water, lightly sweetened, for 8 to 10 hours, a fit time for the liquid being brought into a full fermentation, at which time the yeast has recovered its former power. The same process will hold good for manufacturing rye bread, only 25 per cent., about, of coarse bran are to be extracted. For manufacturing biscuits, I use also the same process, only the dough is made very hard and immediately taken into the oven, and the products thus obtained are far superior to the common biscuits, both for their good taste and preservation. Should, however, an old practice exclude all manner of fermentation, then I might dilute the rough parts of flour in either acidulated or non-acidulated water, there to be left to work for the same time as before, then sift the water and decant it, after a proper settling of the farinaceous matters of which the dough is to be made; thus the action of the acid, decantation, and sifting, would effectively remove all causes of alteration, which generally impair the biscuits made of inferior flour.

"The apparatus required for this process is very plain, and consists of a kneading trough, in which the foul parts are mixed mechanically, or by manual labour, with the liquid above mentioned. From this trough, and through an opening made therein, the liquid mixture drops into the fermenting tub, deeper than wide, which must be kept tightly closed during the fermenting work. At the lower part of this tub a cock is fitted, which lets the liquid mixture down upon an incline plane, on which the liquid spreads, so as to be equally distributed over the whole surface of the sieve. This sieve, of an oblong rectangular form, is laid just beneath, and its tissue ought to be so close as to prevent the least fragments of bran from passing through; it is actuated by the hand, or rather by a crank. In all cases that part of the sieve which is opposite to the cock must strike upon an unyielding body, for the purpose of shaking the pellicles remaining on the tissue, and driving them down towards an outlet on the lower part of the sieve, and thence into a trough purposely contrived for receiving the waters issuing from the sieve, and discharging them into a tank.

"The next operation consists in diluting those pellicles, or rougher parts, which could not pass through the sieve, sifting them again, and using the white water resulting therefrom to dilute the foul parts intended for subsequent operations. The sieve or sieves may sometimes happen to be obstructed by some parts of gluten adhering thereto, which I wash off with acidulated water for silk tissues, and with an alkali for metallic ones. This washing method I deem very important, as its non-application, may hinder a rather large operation, and therefore I wish to secure it. This apparatus may be liable to some variations, and admit of several sieves superposed, and with different tissues, the broadest, however, to be placed uppermost.

"Among the various descriptions and combinations of sieves that may be employed, the annexed figures show one that will give satisfactory results.

"*Fig.* 263 is a longitudinal section, and *fig.* 264 an end view, of the machine from which the bran is ejected. The apparatus rests upon a cast-iron framing *a*, consisting of two cheeks, kept suitably apart by tie pieces *b*; a strong cross bar on the upper part admits a wood cylinder *c*, circled round with iron, and provided with a wooden cock *d*. The cylinder *c* receives through its centre an arbor *f*, provided

Digitized by Google

with four arms *e*, which arbor is supported by two cross bars *g* and *h*, secured by means of bolts to the uprights *i*. Motion is imparted to the arbor *f* by a crank *j*, by pulleys driven by the endless straps *k*, and by the toothed wheel *l*, gearing into the wheel *m*, which is keyed on the upper end of the arbor *f*. Beneath the cylinder *c*,

263

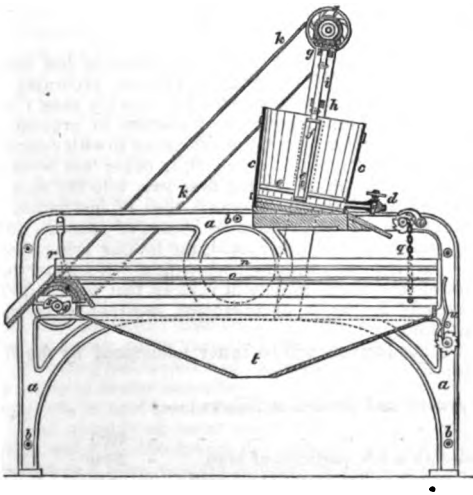

264

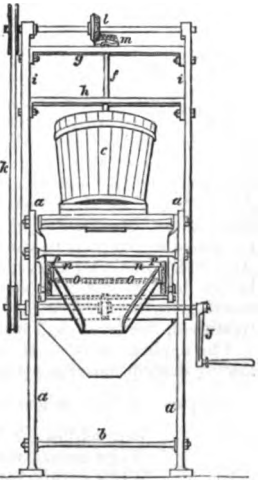

two sieves *n* and *o* are borne into a frame *p*, suspended on one end to two chains *q*, and on the other resting on two guides or bearings *r*, beneath which, and on the crank shaft, are cams *s*, by which that end of the frame that carries the sieves is alternately raised and lowered. A strong spring *u* is set to a shaft borne by the framing *a*, whilst a ratchet wheel provided with a clink allows the said spring, according to the requirements of the work, to give more or less impulse or shaking as the cams *s* are acting upon the frame-sieve carrying the sieve. Beneath the said frame a large hopper *t* is disposed, to receive and lead into a tank the liquid passing through the sieves. The filter sieve is worked as follows:—After withdrawing, by means of bolting hutches, 70 per cent., about, of fine flour, I take out of the remaining 30 per cent. about 20 per cent. of groats, neglecting the remaining 10 per cent., from which, however, I could separate the little flour still adhering thereto, but I deem it more available to sell it off in this state. I submit the 20 per cent. of groats to a suitable vinous fermentation, and have the whole taken into the cylinder *c*, there to be stirred by means of the arbor *f* and the arms *e*; after a suitable stirring, the cock *d* is opened and the liquid is let out, spread on the uppermost sieve *n*, which keeps back the coarsest bran. The liquid drops then into the second sieve or filter *o*, by which the least fragments are retained; the passage of the liquid through the filters is quickened by the quivering motion imparted by the cams *s* to the frame carrying the sieve."

The advantages resulting from such a process are obvious: first, it would appear—and those experiments have been confirmed by the committee of the Académie des Sciences, who had to report upon them—that no less than from 16 to 17 per cent. of white bread of superior quality can be obtained from wheat, which increase is not due to water, as in other methods, but is a true and real one, the Commissioners having ascertained that the bread thus manufactured did not contain more water than that made in the usual way, their comparative examinations in this respect having given the following results:—

Loss by drying in Air.

	Crumb.	Crust.
Old method	37·8	12·0
New method	37·5	14·0
Difference	00·3	2·0

Digitized by Google

Another experiment by Peligot:—

Loss by drying in Air at 248° F.

	Crumb and Crust.
New method	34·9 per cent.
Old method	34·1 „
Difference	00·8 „

Since the enrolment of his Specification, however, M. Mège Mouriès has made an improvement, which simplifies considerably his original process, according to which the destruction of the cerealin, as we saw, was effected by ordinary yeast; that is to say, by alcoholic fermentation. The last improvement consists in preventing cerealin from becoming a lactic or glucosic ferment, by precipitating it with common salt, and not allowing it time to become a ferment. In effect, in order that cerealin may produce the objectionable effects alluded to, it must first pass into the state of ferment, and, as all nitrogenous substances require a certain time of incubation to become so*, if, on the one hand, cerealin be precipitated by means of common salt, the glucosic action is neutralised; whilst, on the other hand, the levains being made with flour containing no cerealin—that is to say, with best white flour—if a short time before baking households or seconds are added thereto, it is clear that time will be wanting for it (the ferment) to become developed or organised, and that, under this treatment, the bread will remain white.

The application of these scientific deductions will be better understood by the following description of the process:—

100 parts of clean wheat are ground and divided as follows:—

Best whites for leaven	40·0
White groats, mixed with a few particles of bran	38·0
White groats, mixed with a larger quantity of bran	8·0
Bran (not used)	15·5
Loss	0·5
	102·0

These figures vary, of course, according to the kind of wheat used, according to seasons, and according to the description of mill and the distance of the millstones used for grinding.

"In order to convert these products into bread," says M. Mège Mouriès, "a leaven is to be made by mixing the 40 parts of best flour above alluded to, with 20 parts of water, and proceeding with it according to the mode and custom adopted in each locality. This leaven, no matter how prepared, being ready, the 8 parts of groats mixed with the larger quantity of bran above alluded to, are diluted in 45 parts of water in which 0·6 parts of common salt have been previously dissolved, and the whole is passed through a sieve which allows the flour and water to pass through, but retains and separates the particles of bran. The watery liquid so obtained has a white colour, is flocculent, and loaded with cerealin; it no longer possesses the property of liquefying gelatinous starch, and weighs 38 parts (the remainder of the water is retained in the bran, which has swelled up in consequence, and remains on the sieve). The leaven is then diluted with that water, which is loaded with best flour, and is used for converting into dough the 38 parts of white groats above alluded to; the dough is then divided into suitable portions, and after allowing it to stand for one hour, it is finally put in the oven to be baked. As the operations just described take place at a temperature of 25° C. (=77° F.), the one hour during which the dough is left to itself, is not sufficient for the cerealin to pass into the state of ferment, and the consequence is the production of white bread. Should, however, the temperature be higher than that, or were the dough allowed to be kept for a longer time before baking, the bread produced, instead of being white, would be so much darker, as the contact would have lasted longer. By this process, 100 parts in weight of wheat yield 136 parts of dough, and, finally, 115 parts in weight of bread" instead of 100, which the same quantity of wheat would have yielded in the usual way. This is supposing that the grinding of the wheat has been effected with close set millstones; if ground in the usual manner, the average yield does not exceed 112 parts in weight of bread.

The substances which are now almost exclusively employed for adulterating bread

* Communication of M. Mège Mouriès to the Académie des Sciences, January, 1856.

Digitized by Google

are, *water*, alone or incorporated with rice, or *water* and *alum*. other substances, however, are or have been also occasionally used for the same purpose; they are, *sulphate of copper, carbonate of magnesia, sulphate of zinc, carbonate of ammonia, carbonate and bicarbonate of potash, carbonate and bicarbonate of soda, chalk, plaster, lime, clay, starch, potatoes, and other fecula.*

This retention of water into bread is secured by underbaking, by the introduction of rice and feculas, and of alum.

Underbaking is an operation which consists of keeping in the loaf the water which otherwise would escape while baking; it is, therefore, a process for selling water at the price of bread. It is done by introducing the dough into an oven unduly heated, whereby the gases contained in the dough at once expand, and swell it up to the ordinary dimensions, whilst a deep burnt crust is immediately afterwards formed; which, inasmuch as it is a bad conductor of heat, prevents the interior of the loaf from being thoroughly baked, and at the same time opposes the free exit of the water contained in the dough, and which the heat of the oven partly converts into steam; while the crust becomes thicker and darker than it otherwise should be, a sensible loss of nutritive elements being sustained, at the same time, in the shape of pyrogenous products which are dissipated.

The proportion of water retained in bread by underbaking is sometimes so large, that a baker may thus obtain as much as 106 loaves from a sack of flour.

The addition of boiled rice to the dough is also pretty frequently used to increase the yield of loaves; this substance, in fact, absorbs so much water that as many as 116 quartern loaves have thus been obtained from one sack of flour.

From a great number of experiments made with a view to determine the normal quantity of water contained in the crumb of genuine bread, it is ascertained that it amounts, in new bread, from 38 at least to at most 47 per cent.

The quantity of water contained in bread is easily determined, by cutting a slice of it, weighing 500 grains, for example, placing it in a small oven heated, by a gas-burner or a lamp, to a temperature of about 220° F., until it no longer loses weight, the difference between the first and last weighing (that is to say, the loss) indicating, of course, the amount of water.

Alum, however, is the principal adulterating substance used by bakers, *almost without exception, in this metropolis*; as was proved by Dr. Normanby in his evidence before the Select Committee of the House of Commons, appointed in 1855, under the presidence of Mr. W. Scholefield, to inquire into the adulteration of food, drinks, and drugs, which assertion was corroborated and established beyond doubt by the other chemists who were examined also on the subject.

The introduction of alum into bread not only enables the baker to give to bread made of flour of inferior quality the whiteness of the best bread, but to force and keep in it a larger quantity of water than could otherwise be done. We shall see presently that this fact has been denied, and on what grounds.

The quantity of alum used varies exceedingly; but no appreciable effect is produced when the proportion of alum introduced is less than 1 in 900 or 1000, which is at the rate of 27 or 28 grains in a quartern loaf. The use of alum, however, has become so universal, and the Act of Parliament which regulates the matter has so long been considered as a dead letter, from the trouble, and chance of pecuniary loss which it entails on the prosecutor should his accusation prove unsuccessful, that but few, and until quite lately none, of the public officers would undertake the discharge of a duty most disagreeable in itself and at the same time full of risk.

When alum is used in making bread, one of the two following things may happen: either the alum will be decomposed, as just said, in which case the alumina will, of necessity, be set free as soon as digestion will have decomposed the organic matter with which it was combined; and thus it is presumable that either alum will be re-formed in the stomach, or that, according to Liebig, the phosphoric acid of the phosphates of the bread, uniting with the alumina of the alum, will form an insoluble phosphate of alumina, and the beneficial action of the phosphates will, consequently, be lost to the system; and since phosphoric acid forms with alumina a compound hardly decomposable by alkalis or acids, this may, perhaps, explain the indigestibility of the London bakers' bread, which strikes all foreigners. — *Letters on Chemistry.*

The last defence set up in behalf of alumed bread to be noticed is, that, with certain descriptions of flour, bread cannot be made without it; that by means of alum a large quantity of flour is made available for human food, which, without it, must be withdrawn, and turned to some other less important uses, to the great detriment of the population, and particularly of the poor, who would be the first to suffer from the increase of the price of bread which such a withdrawal must fatally produce.

Digitized by Google

The process usually adopted for the detection of alum is that known as Kuhlman's process, which consists in incinerating about 3000 grains of bread, porphyrising the ashes so obtained, treating them by nitric acid, evaporating the mixture to dryness, and diluting the residue with about 300 grains of water, with the help of a gentle heat; without filtering, a solution of caustic potash is then added, the whole is boiled a little, filtered, the filtrate is tested with a solution of sal ammoniac, and boiled for a few minutes. If a precipitate is formed it is *not alumina*, as hitherto thought and stated by Kuhlman and all other chemists, but *phosphate of alumina*,—a circumstance of great importance, not in testing for the presence of alumina, but for the determination of its amount, as will be shown further on, when entering into the details of the modifications which it is necessary to make to Kuhlman's process.

In a paper read in April, 1858, at the Society of Arts, Dr. Odling stated that out of 46 examinations of ashes furnished him by Dr. Gilbert, and treating them by the above process, he (Dr. Odling) obtained, to use his own words, "in 21 instances, the celebrated white precipitate said to be indicative of alumina and a um, so that had these samples been in a manufactured instead of the natural state — had the wheat, for example, been made into flour — I should have been justified, according to the authority quoted, in pronouncing it to be adulterated with alum. But a subsequent examination of the precipitates I obtained, showed that in reality they were not due to alumina at all. Mr. Kuhlman's process, as above described, is possessed of rare merits: it will never fail in detetecting alumina when present, and will often succeed in detecting it when absent also. The idea of weighing this *olla podrida* of a precipitate, and from its weight calculating the amount of alum present, as is gravely recommended by great anti-adulteration adepts, is too preposterous to require a moment's refutation."

Having stated the question in dispute as it is at present stands, we must leave it to be discussed in another place.

In order, however, to render the process for the detection of alum in bread free from objections, the following method is recommended. It requires only ordinary care, and it is perfectly accurate:—

Cut the loaf in half; take a thick slice of crumb from the middle, carefully trimming the edges so as to remove the crust, or hardened outside, and weigh off 1500 or 3000 grains of it; crumble it to powder, or cut it into slices, and expose them, on a sheet of platinum foil turned up at the edges, to a low red heat, until fumes are no longer evolved, and the whole is reduced to charcoal, which will require from twenty to forty minutes, according to the quantity; transfer the charcoal to a mortar, and reduce it to fine powder; put now this finely-pulverised charcoal back again on the platinum foil tray, and leave it exposed thereon to a dark cherry-red heat until reduced to grey ashes, for which purpose gas-furnace lamps will be found very convenient. Only a cherry-red heat should be applied, because at a higher temperature the ashes might fuse, and the incineration be thus retarded. Remove the source of heat, drench the grey ashes with a concentrated solution of nitrate of ammonia, and carefully reapply the heat; the last portions of charcoal will thereby be burnt, and the ashes will then have a white or drab colour. Drench them on the tray with moderately strong and pure hydrochloric acid, and after one or two minutes' standing, wash the contents of the platinum foil tray, with distilled water, into a porcelain dish; evaporate to perfect dryness, in order to render the silica insoluble; drench the perfectly dry residue with strong and pure muriatic acid, and, after standing for five or six minutes, dilute the whole with water, and boil; while boiling, add carefully as much carbonate of soda as is necessary nearly, but not quite, to saturate the acid, so that the liquor may still be acid; add as much pure alcohol-potash as is necessary to render it strongly alkaline; boil the whole for about three or four minutes, and filter. If now, after slightly supersaturating the strongly alkaline filtrate with pure muriatic acid, the further addition of a solution of carbonate of ammonia produces, either at once or after heating it for a few minutes, a light, white, flocculent precipitate, it is a sign of the presence of alumina, the identity of which is confirmed by collecting it on a filter, putting a small portion of it on a platinum hook, or on charcoal, heating it thereon, moistening the little mass with nitrate of cobalt, and again strongly heating it before the blowpipe; when if, *without fusing*, it assumes a beautiful blue colour, the presence of alumina is corroborated. If the operator possesses a silver capsule, he will do well to use it instead of a porcelain one for boiling the mass with pure caustic alcohol-potash, in order to avoid all chance of any silica (from the glaze) becoming dissolved by the potash, and afterwards simulating the presence of alumina, though, if the boiling be not protracted, a porcelain capsule is quite available. It is, however, absolutely necessary that he should use *potasse à l'alcohol*, for ordinary caustic potash *always* contains some, and occasionally consider-

Digitized by Google

able, quantities of alumina, and is totally unsuited for such an investigation. Even *potasse à l'alcohol* retains traces of silica, either alone or combined with alumina; so that for this, and other reasons which will be explained presently, an extravagant quantity of it should not be used.

Lastly, carbonate of ammonia is preferable to caustic ammonia for precipitating the alumina, since that earth is far from being insoluble in caustic ammonia.

The liquor from which the alumina has been separated should now be acidified with hydrochloric acid, and tested with chloride of barium, which should then yield a copious precipitate of sulphate of barytes.

The only precipitate which can, under the circumstances of the experiment, simulate alumina, is the phosphate of that earth, which behaves with all reagents as pure alumina. Such a precipitate, therefore, if taken account of as pure alumina, would altogether vitiate a quantitative analysis if the amount of alum were calculated from it; but the proof that a certain quantity of alum had been used in the bread from which it had been obtained would remain unshaken; since alumina, whether in that state or in that of its phosphate, could not have been found except a salt of alumina —to wit, alum—had been used by the baker. When, therefore, the exact amount of alumina has to be determined, the precipitate in question should be submitted to further treatment in order to separate the alumina; and this can be done easily and rapidly by dissolving the precipitate in nitric acid, adding a little metallic tin to the liquor, and boiling. The tin becomes rapidly oxidised, and remains in the state of an insoluble white powder, which is a mixture of peroxide of tin and of phosphate of tin, at the expense of all the phosphoric acid of any earthy phosphate which may have been present. The whole mass is evaporated to dryness, and the dry residue is then treated by water and filtered, in order to separate the insoluble white powder, and the filtrate which contains the alumina should now be supersaturated with carbonate of ammonia. If a precipitate is formed, it is pure alumina. The white insoluble powder, after washing, may be dissolved in hydrochloric acid, and after diluting the solution with water, the tin may be precipitated therefrom by passing through it a stream of sulphuretted hydrogen to supersaturation, leaving at rest for ten or twelve hours, filtering, boiling the filtrate until all odour of sulphuretted hydrogen has disappeared; an excess of nitrate of silver is then added, and the liquor filtered, to separate the chloride of silver produced, and *exactly* neutralising the filtrate with ammonia; and if a lemon-yellow precipitate is produced, immediately soluble in the slightest excess of either ammonia or nitric acid, it is basic phosphate of silver ($3AgO$), PhO^5, the precipitate obtained in the first instance being thus proved to be phosphate of alumina. The pure alumina obtained may now be collected on a filter, washed with boiling water, thoroughly dried, and then ignited and weighed. One grain of alumina represents 9·027 grains of crystallised alum.

In testing bread for alum, it should be borne in mind, however, that the water used for making the dough generally contains a certain quantity of sulphates, and that a precipitate of sulphate of barytes will therefore be very frequently obtained, though much less considerable than when alum has been used. Some waters called "selenitous" contain so much sulphate of lime in solution, that if they were used in making the dough, chloride of barium would afford, of course, a considerable precipitate. For these reasons, therefore, the separation and identification of alumina are the only reliable proofs; because, as that earth does not exist normally in any shape in wheat or common salt otherwise than in traces, the proof that alum has been used becomes irresistible when we find, on the one hand, alumina, and, on the other, a more considerable amount of sulphate of barytes than, except under the most extraordinary circumstances, genuine bread would yield.

Sulphate of copper, like alum, possesses the property of hardening gluten, and thus, with a flour of inferior quality, bread can be made of good appearance, as if a superior flour had been used.

The use of sulphate of copper in bread is said to have originated about 25 or 30 years ago with the bakers of Belgium.

M. Kuhlman, Professor of Chemistry at Lille, having been called upon several times by the courts of justice to examine, by chemical processes, bread suspected of containing substances injurious to health, collected some interesting facts upon the subject, which were published under the direction of the central council of salubrity of the department du Nord.

For some time public attention has been drawn to an odious fraud committed by a great many bakers in the north of France and in Belgium,—the introduction of a certain quantity of sulphate of copper into their bread. When the flour was made from bad grain, this adulteration was very generally practised, as was proved by many convictions and confessions of the guilty persons. When the dough does not rise well

Digitized by Google

in the fermentation (*le pain pousse plat*), this inconvenience was found to be obviated by the addition of blue vitriol, which was supposed also to cause the flour to retain more water. The quantity of blue vitriol added is extremely small, and it is never done in presence of strangers, because it is reckoned a valuable secret. It occasions no economy of yeast, but rather the reverse. In a litre (about a quart) of water, an ounce of sulphate of copper is dissolved; and of this solution a wine-glassful is mixed with the water necessary for 50 quartern or 4-pound loaves.

Lime water has been recommended by Liebig as a means of improving the bread made from inferior flour, or of flour slightly damaged by keeping, by warehousing, or during transport in ships; and this method, at the meeting of the British Association at Glasgow, in 1855, was reported as having been tried to a somewhat considerable extent by the bakers of that town, and with success, the bread kneaded with lime water, instead of pure water, being of good appearance, good taste, good texture, and free from the sour taste which invariably belongs to alumed or even to genuine bread;—admitting all this to be true, still we should deprecate the use of lime water in bread, because it cannot be done with impunity; however small the dose of additional matter may be considered when taken separately, it is always large when considered as portion of an article of food like bread, consumed day after day, and at each meal, without interruption. To allow articles of food to be tampered with, under any circumstances, is a dangerous practice, even if it were proved that it can be done without risk, which, however, is not the case; and Liebig himself has said that chemists should never propose the use of chemical products for culinary preparations.

The quantity of ashes left after the incineration of genuine bread, varies from 1·5 at least to at most 3 per cent.; and if the latter quantity of ashes be exceeded, the excess may safely be pronounced to be due to an artificial introduction of some saline or earthy matter.

As to the addition to bread of potatoes, beans, rice, turnips, maize, or Indian corn, which has occasionally been practised to a considerable extent, especially in years of scarcity, it is evident that they are actually permitted under the Act of Parliament, Will. IV. cap. 27, sect. 11.

In his "New Letters on Chemistry," Liebig makes the following remarks on the subject:—

"The proposals which have hitherto been made to use substitutes for flour, and thus diminish the price of bread in times of scarcity, prove how much the rational principles of hygiene are disregarded, and how unknown the laws of nutrition are still. It is with food as with fuel. If we compare the price of the various kinds of coals, of wood, of turf, we shall find that the number of pence paid for a certain volume or weight of these materials is about proportionate to the number of degrees of heat which they evolve in burning. . . . . The mean price of food in a large country is ordinarily the criterion of its nutritive value. . . . . Considered as a nutritive agent, rye is quite as dear as wheat; such is the case also with rice and potatoes; in fact, no other flour can replace wheat in this respect. In times of scarcity, however, these ratios undergo modification, and potatoes and rice acquire then a higher value, because, in addition to their natural value as respiratory food, another value is superadded, which in times of abundance is not taken into account.

"The addition to wheat flour of potato starch, of dextrine, of the pulp of turnips, gives a mixture, the nutritive value of which is equal to that of potatoes, or perhaps less; and it is evident that one cannot consider as an improvement this transformation of wheat flour into a food having only the same value as rice or potatoes."

The detection of potato starch, of beans, peas, Indian corn, rice, and other feculas, which is so easily effected by means of the microscope in flour, is exceedingly difficult, if not impossible, in bread. Bread which has been made of flour mixed with Indian corn is harsher to the touch, and has frequently a slight yellowish colour, and when moistened with solution of potash of ordinary strength, a yellow or greenish-yellow tinge is developed.—A. N. See TOAST, LEAVEN.

BREAD-FRUIT TREE. (*Artocarpaceæ, ἄρτος, bread; καρπὸς, fruit.*) The *A. incisa*, the true bread-fruit tree, is a native of the South Sea Islands, inhabiting such places as are hot and damp. The tree is about twelve inches diameter, and grows to the height of forty feet. The fruit is about the size of a melon, and the seeds are large nut-like bodies. The fleshy receptacle is the valuable part of the fruit. It is very white, and of the consistence of new bread. When washed it becomes excellent food, tasting like wheaten bread, only a little sweeter.

A cloth is made of the fibres of the inner bark; the wood is used for building houses and boats. The leaves are used as towels and tablecloths, and to wrap provisions in. The male catkins serve as tinder, and the juice is employed as birdlime,

Digitized by Google

and to mend the cracks in the water vessels of the natives. See Cow Tree, Jack Tree, Upas Tree.

BRECCIA. An Italian term used for a rock composed of angular fragments of stone, cemented together by an earthy or a mineral substance. It corresponds to the "brockrans" of the Cumberland miners.

BRECCIATED AGATE. An agate composed of fragments of jasper, bloodstone, &c., cemented by chalcedony.

BREEZES (*Braise*, Fr.). The dust of coke or charcoal. The coke burner applies this term to the small residual coke obtained in coke burning. The sifted ashes removed from houses is called *breeze*, and sold under that name to brickmakers and others.

BREEZE OVEN. An oven for the manufacture of small coke. Mr. Joseph Davis, of Birmingham, has patented (*Specification*, A.D. 1856, No. 1424) a breeze oven, many of which are in use in South Staffordshire. The "thick coal" of South Staffordshire is employed in this oven. The slack is screened, and the finer part is burnt on the grate adjoining the boiler, the remainder is converted into "breezes." Mr. Davis's specification will most completely illustrate and explain the character of this oven.

264 *a*

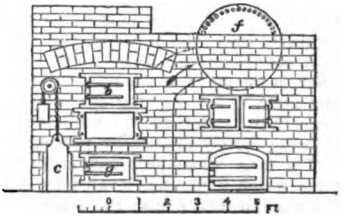

This invention consists of a coke oven, constructed, arranged, and used as hereinafter described, and illustrated in the accompanying drawings, for the manufacture of the small coke called breezes, for economising of heat, and for the suppression or partial suppression of smoke.

Fig. 264 *a* of the accompanying drawing represents in elevation, *fig.* 264 *b* in vertical section, and *fig.* 264 *c* in plan, a coke oven, combined with the furnace of a steam boiler, constructed according to this invention. The said coke oven consists of a chamber or furnace, *a*, provided with doors, *b*, *b*, by which said doors the coal to be coked is introduced and the admission of air regulated. The draught may be further regulated by means of the damper, *c*. The oven, *a*, is also provided with flues, *d*, in which flues dampers may be situated. The heated air and flame from the oven, *a*, may be conducted therefrom either into a stack or chimney, or into the furnace or fireplace, *e*, of a steam-boiler, *f*, or the said heated air and flame may be conducted elsewhere, where they can be applied to heating or other useful purpose. When the flame and heated air from the coke oven, *a*, are conducted into the furnace, *e*, of a steam boiler, *f*, they may be delivered at or near the bridge of the said furnace, when they will effect the suppression or partial suppression of the smoke from the said furnace. The heat from the coke oven, *a*, also increases the production of steam in the boiler, *f*. When the coal in the oven, *a*, has been converted into the small coke, called breezes, the combustion is stopped by the closing of the doors, *b*, *b*, damper, *c*, and the door, *g*, of the ash-pit; and the breezes are cooled by the introduction of a jet of water into the said oven, the said water being directed upon the breezes; or the said breezes may be withdrawn from the oven in a heated state, and afterwards cooled by water or otherwise. Although I prefer to place the coke oven on the side of the boiler, as represented, yet it may be placed under the boiler, or in any other convenient situation.

264 *b*

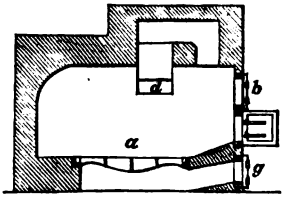

264 *c*

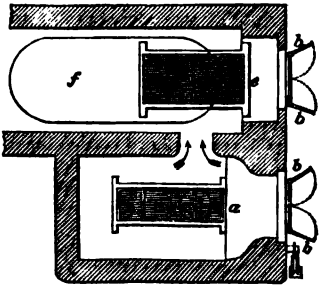

Although I have only represented in the accompanying drawing the combination of a coke oven for manufacturing breezes with a steam boiler, yet the said oven may be combined with any other furnace for the purpose of increasing its heat and suppressing or partially suppressing its smoke; but I believe the nature of my said

Digitized by Google

invention will be sufficiently understood by the description herein given, and illustrated in the accompanying drawing.

The size and form of the ovens may be varied to suit the quantity of breezes to be manufactured, and the particular purposes to which the flame and heated air from the said ovens are to be applied.

BREMER BLUE and GREEN. Pigments consisting of carbonate of copper mixed with alumina and carbonate of lime.

BREWING. (*Brasser*, Fr.; *Brauen*, Germ.) The art of making beer, or an alcoholic liquor, from a fermented infusion of some saccharine and amylaceous substance with water.

Figs. 265 and 266 represent the arrangement of the utensils and machinery in a porter brewery on the largest scale, in which it must be observed that the elevation *fig.* 266, is in a great degree imaginary as to the plane upon which it is taken, but the different vessels are arranged so as to explain their uses most readily, and at the same time to preserve, as nearly as possible, the relative position which is usually assigned to each in works of this nature.

The malt for the supply of the brewery is stored in vast granaries or malt-lofts, usually situated in the upper part of the buildings. Of these, we have been able to represent only one, at A, *fig.* 265: the others, which are supposed to be on each side of it, cannot be seen in this view. Immediately beneath the granary A, on the ground floor, is the mill; in the upper storey above it, are two pairs of rollers (*fig.* 265, 267, and 268), under *a a*, for bruising or crushing the grains of the malt. In the floor beneath the rollers are the mill-stones *b b*, where the malt is sometimes ground, instead of being merely bruised by passing between the rollers, under *a a*.

The malt, when prepared, is conveyed by a trough into a chest *d*, to the left of *b*, from which it can be elevated by the action of a spiral screw, *fig.* 269, enclosed in the sloping tube *e*, into the large chest or binn B, for holding ground malt, situated immediately over the mash-tun D. The mash-tun is a large circular tub with a double bottom; the uppermost of which is called a false bottom, and is pierced with many holes. There is a space of about 2 or 3 inches between the two, into which the stop-cocks enter, for letting in the water and drawing off the wort. The holes of the false bottom, if of wood, should be burned, and not bored, to prevent the chance of their filling up by the swelling of the wood, which would obstruct the drainage: the holes should be conical, and largest below, being about $\frac{3}{4}$ths of an inch there, and $\frac{1}{4}$th at the upper surface. The perforated bottom must be fitted truly to the sides of the mash-tun, so that no grains may pass through. The mashed liquor is let off into a large back, from which it is pumped into the wort coppers. The mash-tun is provided with a peculiar rotatory apparatus for agitating the crushed grains and water together, which we shall presently describe. The size of the wort copper is proportional to the amount of the brewing, and it must, in general, be at least so large as to operate upon the whole quantity of wort made from one mashing; that is, for every quarter of malt mashed, the copper should contain 140 gallons. The mash-tun ought to be at least a third larger, and of a conical form, somewhat wider below than above. The malt is reserved in this binn till wanted, and it is then let down into the mashing-tun, where the extract is obtained by hot water supplied from the copper G, seen to the left of B.

The water for the service of the brewery is obtained from the well E, seen beneath the mill to the right, by a lifting pump worked by the steam engine; and the forcing-pipe *f* of this pump conveys the water up to the large reservoir or water-back F, placed at the top of the engine-house. From this cistern, iron pipes are laid to the copper G (on the left-hand side of the figure), as also to every part of the establishment where cold water can be wanted for cleaning and washing the vessels. The copper G can be filled with cold water by merely turning a cock; and the water when boiled therein, is conveyed by the pipe *g* into the bottom of the mash-tun D. The water is introduced beneath a false bottom, upon which the malt lies, and, rising up through the holes in the false bottom, it extracts the saccharine matter from the malt; a greater or less time being allowed for the infusion, according to circumstances. The instant the water is drawn off from the copper, fresh water must be let into it, in order to be ready for boiling the second mashing; because the copper must not be left empty for a moment, otherwise the intense heat of the fire would destroy its bottom. For the convenience of thus letting down at once as much liquor as will fill the lower part of the copper, a pan or second boiler is placed over the top of the copper, as seen in *fig.* 271; and the steam rising from the copper communicates a considerable degree of heat to the contents of the pan, without any expense of fuel. This will be more minutely explained hereafter.

During the process of mashing, the malt is agitated in the mash-tun, so as to expose every part to the action of the water. This is done by a mechanism contained within

Digitized by Google

the mash-tun, which is put in motion by a horizontal shaft above it, H, leading from the mill. The mash machine is shown separately in *fig.* 270. When the operation of

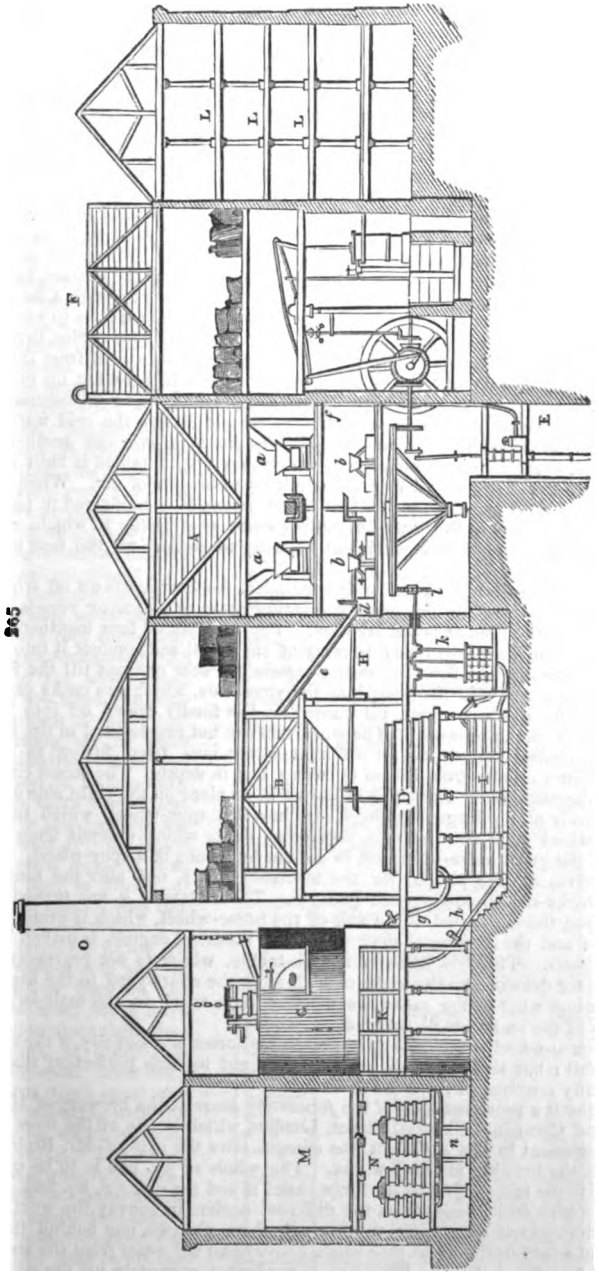

mashing is finished, the wort or extract is drained down from the malt into the vessel I, called the *underback*, immediately below the mash-tun, of like dimensions, and

Digitized by Google

situated always on a lower level, for which reason it has received this name. Here the wort does not remain longer than is necessary to drain off the whole of it from the tun above. It is then pumped up by the three-barrelled pump *k*, into the pan upon the top of the copper, by a pipe which cannot be seen in this section. The wort remains in the pan until the water for the succeeding mashes is discharged from the copper. But this delay is no loss of time, because the heat of the copper, and the steam arising from it, prepare the wort, which had become cooler, for boiling. The instant the copper is emptied, the first wort is let down from the pan into the copper, and the second wort is pumped up from the under-back into the upper pan. The proper proportion of hops is thrown into the copper through the near hole, and then the door is shut down and screwed fast, to keep in the steam, and cause it to rise up through pipes into the pan. It is thus forced to blow up through the wort in the pan, and communicates so much heat to it, or to water, called *liquor* by the brewers, that either is brought near to the boiling point. The different worts succeed each other through all the different vessels with the greatest regularity, so that there is no loss of time, but every part of the apparatus is constantly employed. When the ebullition has continued a sufficient period to coagulate the grosser part of the extract, and to evaporate part of the water, the contents of the copper are run off through a large cock into the *jack-back* K, below G, which is a vessel of sufficient dimensions to contain it, and provided with a bottom of cast-iron plates, perforated with small holes, through which the wort drains and leaves the hops. The hot wort is drawn off from the jack-back through the pipe *h* by the three-barrelled pump, which throws it up to the coolers L L L; this pump being made with different pipes and cocks of communication, to serve all the purposes of the brewery except that of raising the cold water from the well. The coolers, L L L, are very shallow vessels, built over one another in several stages; and that part of the building in which they are contained is built with lattice-work or shutter flaps, on all sides to admit free currents of air. When the wort is sufficiently cooled to be put to the first fermentation, it is conducted in pipes from all the different coolers to the large fermenting vessel or gyle-tun M, which, with another similar vessel behind it, is of sufficient capacity to contain all the beer of one day's brewings.

Whenever the first fermentation is concluded, the beer is drawn off from the great fermenting vessel M, into the small fermenting casks or cleansing vessels N, of which there are a great number in the brewery. They are placed four together, and to each four a common spout is provided to carry off the yeast, and conduct it into the troughs *u*, placed beneath. In these cleansing vessels the beer remains till the fermentation is completed; and it is then put into the store-vats, which are casks or tuns of an immense size, where it is kept till wanted, and is finally drawn off into barrels, and sent away from the brewery. The store-vats are not represented in the figure: they are of a conical shape, and of different dimensions, from fifteen to twenty feet diameter, and usually from fifteen to twenty feet in depth. The steam engine, which puts all the machine in motion, is exhibited in its place on the right side of the figure. On the axis of the large fly-wheel is a bevelled spur-wheel, which turns another similar wheel upon the end of a horizontal shaft, which extends from the engine-house to the great horse-wheel, set in motion by means of a spur-wheel. The horse-wheel drives all the pinions for the mill-stones *b b*, and also the horizontal axis which works the three-barrelled pump *k*. The rollers *a a* are turned by a bevel wheel upon the upper end of the axis of the horse-wheel, which is prolonged for that purpose; and the horizontal shaft H, for the mashing engine, is driven by a pair of bevel wheels. There is likewise a sack-tackle, which is not represented. It is a machine for drawing up the sacks of malt from the court-yard to the highest part of the building, whence the sacks are wheeled on a truck to the malt-loft A, and the contents of the sacks are discharged.

The horse-wheel is intended to be driven by horses occasionally, if the steam engine should fail; but these engines are now brought to such perfection that it is very seldom any resource of this kind is needed.

Fig. 266 is a representation of the *fermenting-house* at the brewery of Messrs. Whitbread and Company, Chiswell Street, London, which is one of the most complete in its arrangement in the world: it was erected after the plan of Mr. Richardson, who conducts the brewing at those works. The whole of *fig.* 266 is to be considered as devoted to the same object as the large vessel M and the casks N, *fig.* 265. In *fig.* 266, *r r* is the pipe which leads from the different coolers to convey the wort to the great fermenting vessels or squares M, of which there are two, one behind the other; *f f* represent a part of the great pipe which conveys all the water from the well E, *fig.* 265, up to the water cistern F. This pipe is conducted purposely up the wall of the fermenting-house, *fig.* 266, and has a cock in it, near *r*, to stop the passage. Just beneath this passage a branch-pipe *p* proceeds, and enters a large pipe *x x*, which has the former pipe *r* withinside of it. From the end of the pipe *x*, nearest to the squares M,

Digitized by Google

another branch *n n* proceeds, and returns to the original pipe *f*, with a cock to regulate it. The object of this arrangement is to make all, or any part, of the cold water flow through the pipe *x x*, which surrounds the pipe *r*, formed only of thin copper, and thus cool the wort passing through the pipe *r*, until it is found by the thermometer to have the exact temperature which is desirable before it is put to ferment in the great square M. By means of the cocks at *n* and *p*, the quantity of cold water passing over the surface of the pipe *r* can be regulated at pleasure, whereby the heat of the wort, when it enters into the square, may be adjusted within half a degree.

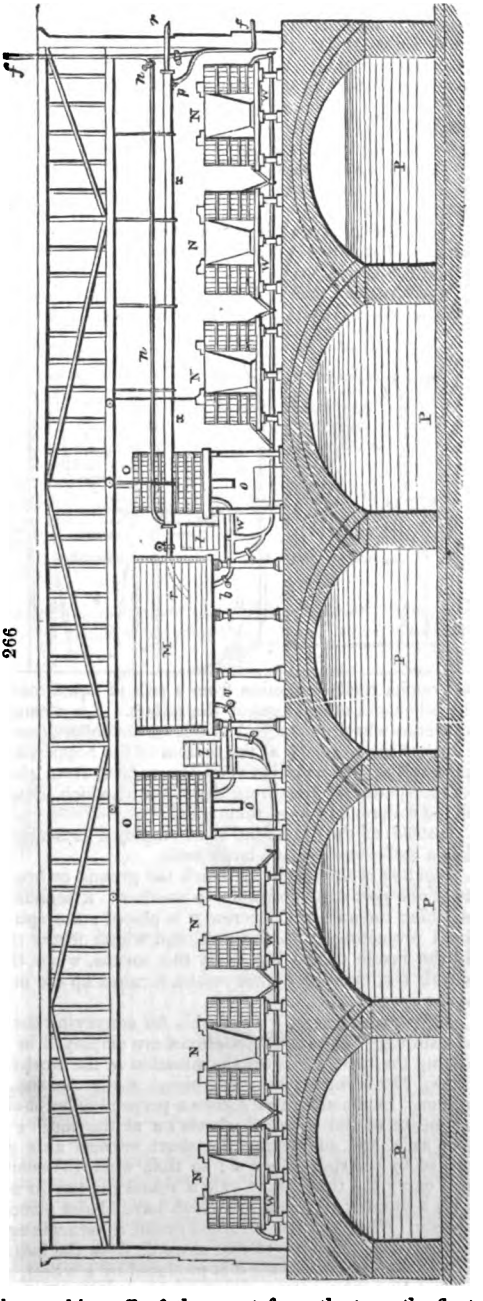

When the first fermentation in the squares M M is finished, the beer is drawn off from them by pipes marked *v*, and conducted by its branches W W W, to the different rows of fermenting-tuns, marked N N, which occupy the greater part of the building. In the hollow between every two rows are placed large troughs, to contain the yeast which they throw off. The figure shows that the small tuns are all placed on a lower level than the bottom of the great vessels M, so that the beer will flow into them, and, by hydrostatic equilibrium, will fill them to the same level, When they are filled, the communication-cock is shut; but, as the working off the yeast diminishes the quantity of beer in each vessel, it is necessary to replenish them from time to time. For this purpose, the two large vats O O are filled from the great squares M M, before any beer is drawn off into the small casks N, and this quantity of beer is reserved at the higher level for filling up. The two vessels O O are, in reality, situated between the two squares M M; but I have been obliged to place them thus in the section, in order that they may be seen. Near each filling-up tun O is a small cistern *t* communicating with the tun O by a pipe, which is closed by a float-valve. The small cisterns *t* are always in communication with the pipes which lead to the small fermenting vessels N; and therefore the surface of the beer in all the tuns, and in the cisterns, will always be at the same level; and as this level subsides by the working off of the yeast from the tuns, the float sinks and opens the valve, so as to admit a sufficiency of beer from the filling-up tuns

Digitized by Google

o, to restore the surfaces of the beer in all the tuns, and also in the cistern *t*, to the original level. In order to carry off the yeast which is produced by the fermentation of the beer in the tuns o o, a conical iron dish or funnel is made to float upon the surface of the beer which they contain; and from the centre of this funnel a pipe, *o*, descends, and passes through the bottom of the tun, being packed with a collar of leather, so as to be water-tight; at the same time that it is at liberty to slide down, as the surface of the beer descends in the tun. The yeast flows over the edge of this funnel-shaped dish, and is conveyed down the pipe to a trough beneath.

Beneath the fermenting-house are large arched vaults, P, built with stone, and lined with stucco. Into these the beer is let down in casks when sufficiently fermented, and is kept in store till wanted. These vaults are used at Mr. Whitbread's brewery, instead of the great store-vats of which we have before spoken, and are in some respects preferable, because they preserve a great equality of temperature, being beneath the surface of the earth.

The kiln-dried malt is sometimes ground between stones in a common corn mill, like oatmeal; but it is more generally crushed between iron rollers, at least for the purpose of the London brewers.

The Crushing Mill.—The cylinder malt-mill is constructed as shown in *figs.* 267, 268. I is the sloping-trough, by which the malt is let down from its bin or floor to the hopper A of the mill, whence it is progressively shaken in between the rollers B D. The rollers are of iron, truly cylindrical, and their ends rest in bearers of hard brass, fitted into the side frames of iron. A screw E goes through the upright, and serves to force the bearer of the one roller towards that of the other, so as to bring them closer together when the crushing effect is to be increased. G is the square end of the axis, by which one of the rollers may be turned either by the hand or by power; the other derives its rotatory motion from a pair of equal-toothed wheels H, which are fitted to the other end of the axes of the rollers. *d* is a catch which works into the teeth of a ratchet-wheel on the end of one of the rollers (not shown in this view). The lever *c* strikes the trough *b* at the bottom of the hopper, and gives it the shaking motion for discharging the malt between the rollers, from the side sluice *a*. *e e*, *fig.* 267, are scraper-plates of sheet iron, the edges of which press by a weight against the surfaces of the rollers, and keep them clean.

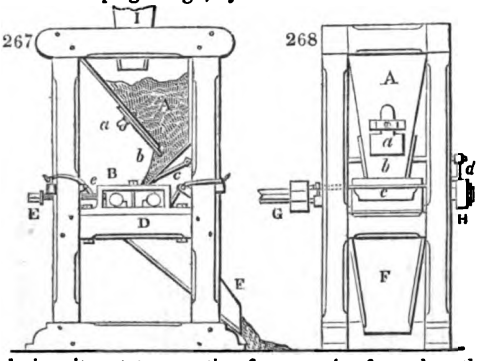

Instead of the cylinders, some employ a crushing mill of a conical-grooved form, like a coffee mill upon a large scale.

Fig. 269 is the screw by which the ground or bruised malt is raised up, or conveyed from one part of the brewery to another. K is an inclined box or trough, in the centre of which the axis of the screw H is placed; the spiral iron plate or worm, which is fixed projecting from the axis, and which forms the screw, is made very nearly to fill the inside of the box. By this means, when the screw is turned round by the wheels E F, or by any other means, it raises up the malt from the box *d*, and delivers it at the spout G.

This screw is equally applicable for conveying the malt horizontally in the trough K, as slantingly; and similar machines are employed in various parts of breweries for conveying the malt wherever the situation of the works require.

Fig. 270 is the mashing-machine. *a a* is the tun, made of wood staves hooped together. In the centre of it rises a perpendicular shaft *b*, which is turned slowly round by means of the bevelled wheels *t u* at the top. *c c* are two arms projecting from that axis, and supporting the short vertical axis *d* of the spur-wheel *x*, which is turned by the spur-wheel *w*; so that, when the central axis *b* is made to revolve, it will carry the thick short axle *d* round the tun in a circle. That axle *d* is furnished with a number of arms, *e e*, which have blades placed obliquely to the plane of their motion. When the axis is turned round, these arms agitate the malt in the tun, and give it a constant tendency to rise upwards from the bottom.

The motion of the axle *d* is produced by a wheel, *x*, on the upper end of it, which is turned by a wheel, *w*, fastened on the middle of the tube *b*, which turns freely round upon its central axis. Upon a higher point of the same tube *b* is a bevel wheel *o*,

Digitized by Google

receiving motion from a bevel wheel *q*, fixed upon the end of the horizontal axis *n n*, which gives motion to the whole machine. This same axis has a pinion *p* upon

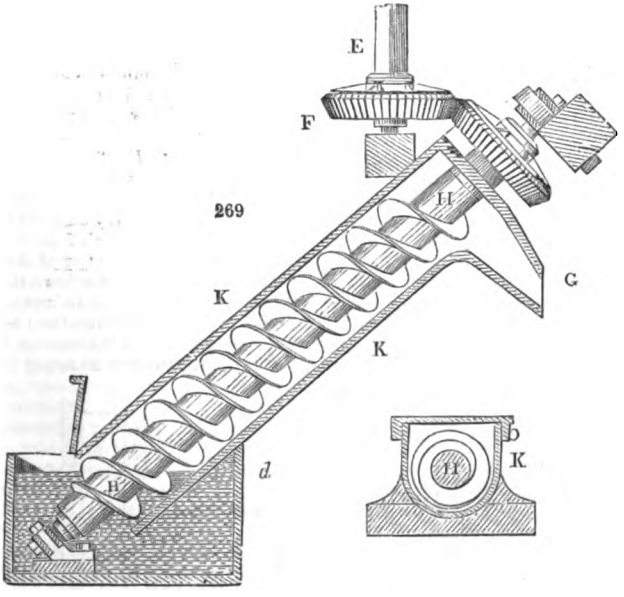

it, which gives motion to the wheel *r*, fixed near the middle of a horizontal axle, which, at its left hand end, has a bevel pinion *t*, working the wheel *u*, before mentioned.

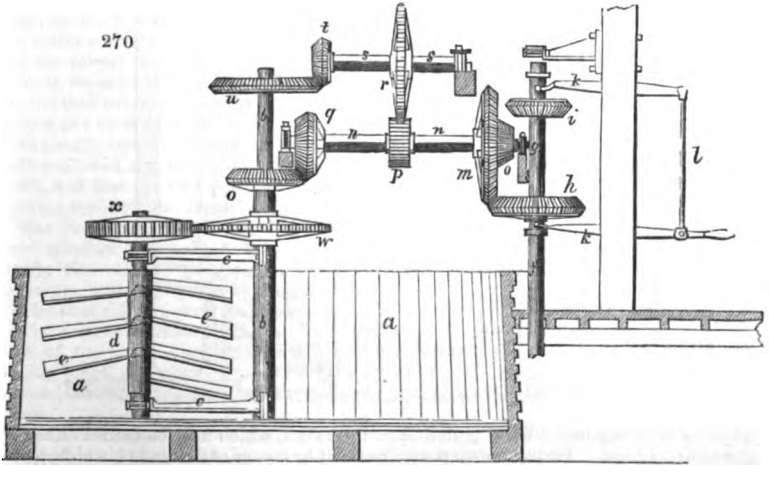

By these means, the rotation of the central axis *b* will be very slow compared with the motion of the axle *d*; for the latter will make seventeen or eighteen revolutions on its own axis in the same space of time that it will be carried once round the tun by the motion of the shaft *b*. At the beginning of the operation of mashing, the machine is made to turn with a slow motion; but, after having wetted all the malt by one revolution, it is driven quicker. For this purpose, the ascending-shaft *f g*, which gives motion to the machine, has two bevel wheels, *h i*, fixed upon a tube, *f g*, which is fitted upon a central shaft. These wheels actuate the wheels *m* and *o*, upon the end of the

Digitized by Google

horizontal shaft *n n*; but the distance between the two wheels *h* and *i* is such that they cannot be engaged both at once with the wheels *m* and *o*; but the tube *f g*, to which they are fixed, is capable of sliding up and down on its central axis sufficiently to bring either wheel *h* or *i* into gear with its corresponding wheel *o* or *m*, upon the horizontal shaft; and as the diameters of *n o* and *i m* are of very different proportions, the velocity of the motion of the machine can be varied at pleasure, by using one or other. *k* and *k* are two levers, which are forked at their extremities, and embrace collars at the ends of the tube *f g*. These levers being united by a rod, *l*, the handle *k* gives the means of moving the tube *f g*, and its wheels *h i*, up or down, to throw either the one or the other wheel into gear.

Figs. 271, 272 represent the copper of a London brewery. *Fig.* 271 is a vertical section; *fig.* 272, a ground plan of the fire-grate and flue, upon a smaller scale: *a* is the close copper kettle, having its bottom convex within; *b* is the open pan placed upon its top. From the upper part of the copper, a wide tube, *c*, ascends, to carry off the steam generated during the ebullition of the wort, which is conducted through four downwards-slanting tubes, *d d* (two only are visible in this section), into the liquor of the pan *b*, in order to warm its contents. A vertical iron shaft or spindle, *e*, passes down through the tube *c*, nearly to the bottom of the copper, and is there mounted with an iron arm, called *a rouser*, which carries round a chain hung in loops, to prevent the hops from adhering to the bottom of the boiler. Three bent stays, *f*, are stretched across the interior, to support the shaft by a collet at their middle junction. The shaft carries at its upper end a bevel

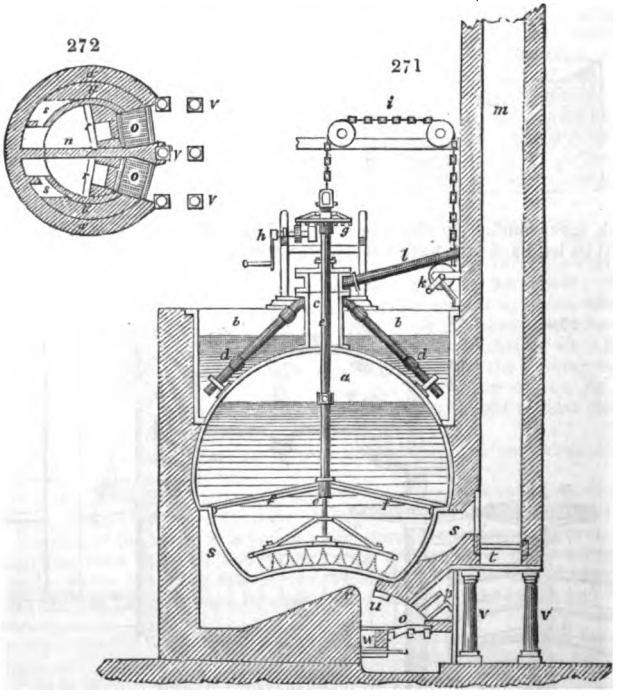

wheel, *g*, working into a bevel pinion upon the axis *h*, which may be turned either by power or by hand. The *rouser* shaft may be lifted by means of the chain *i*, which, going over two pulleys, has its end passed round the wheel and axle *k*, and is turned by a winch: *l* is a tube for conveying the waste steam into the chimney *m*.

The heat is applied as follows: — For heating the colossal coppers of the London breweries, two separate fires are required, which are separated by a narrow wall of brickwork, *n*, *figs.* 271, 272. The dotted circle *a' a'*, indicates the largest circumference of the copper, and *b' b'* its bottom; *o o* are the grates upon which the coals are thrown, not through folding doors (as of old), but through a short slanting iron hopper, shown at *p*, *fig.* 271, built in the wall, and kept constantly filled with the fuel, in order to exclude the air. Thus the low stratum of coals gets ignited before it reaches the

Digitized by Google

grate. Above the hopper *p*, a narrow channel is provided for the admission of atmospherical air, in such quantity merely as may be requisite to complete the combustion of the smoke of the coals. Behind each grate there is a fire-bridge, *r*, which reflects the flame upwards, and causes it to play upon the bottom of the copper. The burnt air then passes round the copper in a semicircular flue, *s s*, from which it flows off into the chimney *m*, on whose under end a sliding damper-plate, *t*, is placed, for tempering the draught. When cold air is admitted at this orifice, the combustion of the fuel is immediately checked. There is, besides, another slide-plate at the entrance of the slanting flue into the vertical chimney, for regulating the play of the flame under and around the copper. If the plate *t* be opened, and the other plate shut, the power of the fire is suspended, as it ought to be, at the time of emptying the copper. Immediately over the grate is a brick arch, *u*, to protect the front edge of the copper from the first impulsion of the flame. The chimney is supported upon iron pillars, *v v*; *w* is a cavity closed with a slide-plate, through which the ashes may be taken out from behind, by means of a long iron hook.

Having thus given the general plan and requisites for a brewery on a large scale, we need scarcely say those arrangements will vary in every establishment, according to the requirements and facilities of the locality, and the various modes of operation.

The first necessity is a plentiful supply of pure water, which it should be the chief aim in all arrangements to render available at the least labour and cost, as on its proper and judicious application greatly depends the regulation of the temperature in the various operations; and the most scrupulous cleanliness in every part is of the utmost importance.

The fermenting rooms and the store cellars should be placed below the ground level, for the purpose of attaining a low and equable temperature; and for this purpose also the double stone fermenting square is highly esteemed. It consists of an inner cubical vessel, containing from 15 to 30 barrels; each side formed by one slab of fine slate. This is placed in an exterior square or shell of inferior stone, leaving a space between the inner and outer squares, which can be filled with hot or cold water at pleasure. The inner or fermenting square has a man-hole, with a raised rim, in the slab forming the top, on which also are raised four other fine slate slabs, which form a cistern for the expansion and overflow of the beer and yeast during the progress of the fermentation, and from which the yeast is readily removed at its close.

The processes of brewing may be classed under three heads—the mashing, the boiling, and the fermentation.

For the principles which should guide the brewer in the conduct of these operations, we refer to the article BEER, where it will be seen that the ultimate success of the entire series depends greatly on the regulation of the temperature, the duration, and the proper management of the initial process of mashing.

With regard to temperature, the brewer must not only regulate the heat of the water for the first mash by the colour, age, and quality of the malt, whether pale, amber, or brown, but he should also mark the temperature of the atmosphere as influencing that of the malt, and the absorption of the heat by the utensils employed; remarking that well-mellowed and brown malt will bear a higher mashing heat than pale or newly-dried, and that the best results are produced when the mash can be maintained at an equable temperature, from 160° to 165°.

The duration of the mash must also have reference to the required quality of the beer, whether intended for keeping some time in store, or for present use, as influencing the relative proportions of dextrine and sugar. The following Table, by Levesque, will exemplify the foregoing remarks.

The first column gives the temperature of the air at the time of mashing.

The second column shows the heat of the water, the quantity used, and the resulting heat of the mash—noting, that if the water has been let into the mash-tun at the boiling point, and allowed to cool down, or the vessel has been thoroughly warmed before the commencement of the process, the heat may be taken several degrees lower.

The third column shows the time for the standing of the mash; but this will be modified, as before stated, by the quality of the extract required.

The bulk of the materials used must also enter into the consideration of the temperature, as a large body of malt will attain the required temperature with a mashing heat lower than a small quantity; the powers of chemical action and condensation of heat being increased with increase of volume.

Donovan, speaking of the temperature to be employed in mashing, lays down the following as a general rule:—For well dried pale malt the heat of the first mashing liquor may be, but should never exceed, 170°; the heat of the second may be 180°; and, for a third, the heat may be, but need never exceed, 185°.

The quantity of water, termed liquor, to be employed for mashing, depends upon

Digitized by Google

the greater or less strength to be given to the beer, but, in all cases, from one barrel and a half to one barrel and three firkins is sufficient for the first stiff mashing, but more liquor may be added after the malt is thoroughly wetted.

The grains of the crushed malt, after the wort is drawn off, retain from 32 to 40 gallons of water for every quarter of malt. A further amount must be allowed for the loss by evaporation in the boiling and cooling, and the waste in fermentation, so that the amount of liquor required for the mashing will, in some instances, be double that of the finished beer, but in general the total amount will be reduced about one-third during the various processes.

Table of Mashing Temperatures.

Temp. of the Air.	Brown Malt. Heat of Mash, 146° to 148°. 6 Firkins per Qr.	Time of Standing.	Temp. of the Air.	High-dried. Heat of Mash, 145° to 147°. 7 Firkins per Qr.	8 Firkins per Qr.	Time of Standing.	Temp. of the Air.	Amber. Heat of Mash, 144° to 146°. 9 Firkins per Qr.	10 Firkins Per Qr.	Time of Standing.	Temp. of the Air.	Pale Malt. Heat of Mash, 143° to 145°. 11 Firkins per Qr.	12 Firkins per Qr.	Time of Standing.
Fah.		H. M.	Fah.			H. M.	Fah.			H. M.	Fah.			H. M.
10°	197·00	4·00	10°	189·00	184·00	3·00	10°	178·00	175·00	2·00	10°	172·00	170·00	1·00
15	195·17	4·00	15	187·42	182·59	3·00	15	176·84	173·92	2·00	15	171·00	169·19	1·00
20	193·34	4·00	20	185·84	181·18	3·00	20	175·68	172·84	2·00	20	170·00	168·28	1·00
25	191·51	4·00	25	184·26	179·77	3·00	25	174·52	171·76	2·00	25	169·00	167·37	1·00
30	189·68	4·00	30	182·68	178·36	3·00	30	173·36	170·68	2·00	30	168·00	166·46	1·00
35	187·85	4·00	35	181·10	176·95	3·00	35	172·20	169·60	2·00	35	167·00	165·55	1·00
40	186·02	4·00	40	179·52	175·54	3·00	40	171·04	168·52	2·00	40	166·00	164·64	1·00
45	184·19	4·00	45	177·94	174·13	3·00	45	169·88	167·44	2·00	45	165·00	163·73	1·00
50	182·36	4·00	50	176·36	172·72	3·00	50	168 72	166·36	2·00	50	164·00	162·82	1·00
55	180·53	4·00	55	174·78	171·31	3·00	55	167·56	165·28	2·00	55	163·00	161·91	1·00
60	178·70	3·40	60	173·20	169·90	2·45	60	166·40	164·20	1·50	60	162·00	161·00	0·55
65	176·87	3·20	65	171·62	168·49	2·30	65	165·24	163·12	1·40	65	161·00	160·19	0·50
70	175·04	3·00	70	170·04	167·07	2·15	70	164·08	162·04	1·30	70	160·00	159·28	0·45
Heat of the Tap, 144° to 146°.			Heat of the Tap, 143° to 145°.				Heat of the Tap, 142° to 144°.				Heat of the Tap, 141° to 143°.			

The following example will give an idea of the proportions for an ordinary quality of beer.

Suppose 13 imperial quarters of the best pale malt be taken to make 1500 gallons of beer, the waste may be calculated at near 900 gallons, or 2400 gallons of water will be required in mashing.

As soon as the water in the copper has attained the heat of 145° in summer, or 167° in winter, 600 gallons of it are to be run off into the mash-tun (which has previously been well cleansed or scalded out with boiling water), and the malt gradually but rapidly thrown in and well intermixed, so that it may be uniformly moistened, and that no lumps remain. After continuing the agitation for about half an hour, more liquor, to the amount of 450 gallons, at a temperature of 190°, may be carefully and gradually introduced, (it is an advantage if this can be done by a pipe inserted under the false bottom of the mash-tun,) the agitation being continued till the whole assumes an equally fluid state, taking care also to allow as small a loss of temperature as possible during the operation, the resulting temperature of the mass being not less than 143°, or more than 148°.

The mash is then covered close, and allowed to remain at rest for an hour, or an hour and a half, after which the tap of the mash-tun is gradually opened, and if the wort that first flows is turbid, it should be carefully returned into the tun until it runs perfectly limpid and clear. The amount of this first wort will be about 675 gallons.

Seven hundred and fifty gallons of water, at a temperature from 180° to 185°, may now be introduced, and the mashing operation repeated and continued until the mass becomes uniformly fluid as before, the temperature being from 160° to 170°. It is then again covered and allowed to rest for an hour, and the wort of the first mash having been quickly transferred from the underback to the copper, and brought to a state of ebullition, the wort of the second mash is drawn off with similar precaution, and added to it. A third quantity of water, about 600 gallons, at a temperature of 185° or 190°, should now be run through the goods in the mash-tun by the sparging process, or any means that will allow the hot liquor to percolate through the grains, displacing and carrying down the heavier and more valuable products of the first two mashings. The wort is now boiled with the hops from one to two hours.

The object of boiling the wort is not merely evaporation and concentration, but extraction, coagulation, and, finally, combination with the hops; purposes which are

Digitized by Google

better accomplished in a deep confined copper, by a moderate heat, than in an open shallow pan with a quick fire. The copper, being encased above in brickwork, retains its digesting temperature much longer than the pan could do. The waste steam of the close kettle, moreover, can be economically employed in communicating heat to water or weak worts; whereas the exhalations from an open pan would prove a nuisance, and would need to be carried off by a hood. The boiling has a four-fold effect: 1, it concentrates the wort; 2, during the earlier stages of heating, it converts the starch into sugar, dextrine, and gum, by means of the diastase; 3, it extracts the substance of the hops diffused through the wort; 4, it coagulates the albuminous matter present in the grain, or precipitates it by means of the tannin of the hops.

The degree of evaporation is regulated by the nature of the wort and the quality of the beer. Strong ale and stout, for keeping, require more boiling than ordinary porter or table-beer brewed for immediate use. The proportion of the water carried off by evaporation is usually from a seventh to a sixth of the volume. The hops are introduced at the commencement of the process. They serve to give the beer not only a bitter aromatic taste, but also a keeping quality, or they counteract its natural tendency to become sour—an effect partly due to the precipitation of the albumen and starch, by their resinous and tanning constituents, and partly to the antifermentable properties of their lupuline, bitter principle, ethereous oil, and resin. In these respects, there is none of the bitter plants which can be substituted for hops with advantage For strong beer, powerful fresh hops should be selected; for weaker beer an older and weaker article will suffice.

The stronger the hops are, the longer time they require for extraction of their virtues; for strong hops, an hour and a half or two hours' boiling may be proper; for a weaker sort, half an hour or an hour may be sufficient; but it is never advisable to push this process too far, lest a disagreeable bitterness, without aroma, be imparted to the beer. In some breweries, it is the practice to boil the hops with a part of the wort, and to filter the decoction through a drainer, called the *jack hop-back*. The proportion of hops to malt is very various; but, in general, from 1¼ lbs. to 1½ lbs. of the former are taken for 100 lbs. of the latter in making good table-beer. For porter and strong ale, 2 lbs. of hops are used, or even more; for instance, from 2 lbs. to 2½ lbs. of hops to a bushel of malt, if the beer be destined for the consumption of India.

During the boiling of the two ingredients, much coagulated albuminous matter in various states of combination, makes its appearance in the liquid, constituting what is called the *breaking or curdling of the wort*, when numerous minute flocks are seen floating in it. The resinous, bitter, and oily-ethereous principles of the hops combine with the sugar and gum, or dextrine of the wort; but for this effect they require time and heat; showing that the boil is not a process of mere evaporation, but one of chemical reaction. A yellowish-green pellicle of hop-oil and resin appears upon the surface of the boiling wort, in a somewhat frothy form: when this disappears, the boiling is presumed to be completed, and the beer is strained off into the cooler. The residuary hops may be pressed and used for an inferior quality of beer; or they may be boiled with fresh wort, and be added to the next brewing charge.

After being strained from the hops, by passing through the false bottom of the hop-jack and allowed to rest on the coolers a sufficient time to deposit the greatest portion of the flocks separated in the boiling, the cooling process is rapidly completed by the action of the *Refrigerator* (*which see*).

The wort is then ready for the inoculation of the yeast and the commencement of the fermentative process, which completes the finished beer. See the articles BEER and FERMENTATION.—R. W. H.

The following statistical statement will represent the present state of the trade:—

Between October, 1855, and October, 1856, there were, in the United Kingdom, 2453 brewers, and 91,484 victuallers, 39,555 persons licensed to sell beer to be drunk on the premises, and 2742, licensed to sell beer, not so to be drunk; 25,143 victuallers brewed, what is not inaptly called, "their own beer," and of these 11,999 were allowed to sell it for consumption on the premises; 23,585,140 bushels of malt were consumed by brewers, 7,164,561 by victuallers, 2,902,318 by persons licensed to sell beer to be drunk on the premises, and 293,588 by persons not so licensed. Between October, 1856, and October, 1857, there were 2416 brewers, 92,065 victuallers, 39,789 persons licensed to sell beer to be drunk on the premises, and 2765 not so licensed; 25,026 victuallers "brewed their own beer."

BREZILIN and BREZILEIN. According to M. Preisser, the colouring matter of Brazil wood (*Brezilin*), is an oxide of a base *Brezilein*, which has no colour.

BRICK. (*Brique*, Fr.; *Backsteine*, *Ziegelsteine*, Ger.) A solid rectangular mass of baked clay, employed for building purposes. Brickmaking is exceedingly ancient; the tower of Babel was built with bricks, as we are told in Scripture, and also the city of Babylon. Over the ruins of Babylon, and the sites of the other great

Digitized by Google

cities of the ancient monarchies, we still discover bricks of various kinds. Some are merely sun-dried masses of clay; others are well burnt; and others, again, are covered with a vitreous glaze. The Egyptians were great brick-makers, and the Romans were celebrated for their bricks and tiles, large quantities of them having been employed in the construction of their different military stations in England. Subsequently, the same bricks have at times been used on later structures, as for instance, in St. Alban's Abbey, which contains a large quantity of bricks from ruins of the Roman buildings of Verulamium. The Lollards' Tower of Lambeth Palace, built in 1454, and the older portions of Hampton Court Palace, built in 1514, are good examples of the English brick architecture in mediæval times.

The natural mixture of clay and sand, called *loam*, as well as marl, which consists of lime and clay with little or no sand, are the materials usually employed in the manufacture of bricks.

There are few places in this country which do not possess alumina in combination with silica and other earthy matters, forming a clay from which bricks can be manufactured. That most generally worked is found on or near the surface in a plastic state. Others are hard marls on the coal measure, new red sandstone, and blue lias formations. It is from these marls that the blue bricks of Staffordshire and the fire bricks of Stourbridge are made. Marl has a greater resemblance to stone and rock, and varies much in colour; blue, red, yellow, &c. From the greatly different and varying character of the raw material, there is an equal difference in the principle of preparation for making it into brick; while one merely requires to be turned over by hand, and to have sufficient water worked in to make it subservient to manual labour, the fire-clays and marls must be ground down to dust, and worked by powerful machinery, before they can be brought into even a plastic state. Now these various clays also shrink in drying and burning from 1 to 15 per cent., or more. This contraction varies in proportion to the excess of alumina over silica, but by adding sand, loam, or chalk, or (as is done by the London brick-makers), by using ashes or *breeze*—as it is technically called—this can be corrected. All clays burning red contain oxides of iron, and those having from 8 to 10 per cent. burn of a blue, or almost a black colour. The bricks are exposed in the kilns to great heat, and when the body is a fire-clay, the iron unites with a portion of the silica, forming a fusible silicate of protoxide of iron, which melts into an external glaze. Bricks of this description are common in Staffordshire, and, when made with good machinery (that is, the clay being very finely ground), are superior to any in the kingdom, particularly for docks, canal or river locks, railway-bridges, and viaducts. In Wolverhampton, Dudley, and many other towns, these blue bricks are commonly employed for paving purposes. Other clays contain lime and no iron; these burn white, and take less heat than any other to burn hard enough for the use of the builder, the lime acting as a flux on the silica. Many clays contain iron and lime, with the lime in excess, when the bricks are of a light dun colour, or white, in proportion to the quantity of that earth present; if magnesia, they have a brown colour. If iron is in excess, they burn from a pale red to the colour of cast iron, in proportion to the quantity of metal.

There are three classes of brick earths :—

1st. Plastic clay, composed of alumina and silica, in different proportions, and containing a small per-centage of other salts, as of iron, lime, soda, and magnesia.

2nd. Loams, or sandy clays.

3rd. Marls, of which there are also three kinds; clayey, sandy, and calcareous, according to the proportions of the earth of which they are composed, viz., alumina, silica, and lime.

Alumina is the oxide of the metal aluminium, and it is this substance which gives tenacity or plasticity to the clay-earth, having a strong affinity for water. It is owing to excess of alumina that many clays contract too much in drying, and often crack on exposure to wind or sun. By the addition of sand, this clay would make a better article than we often see produced from it. Clays contain magnesia and other earthy matters, but these vary with the stratum or rock from which they are composed. It would be impossible to give the composition of these earths correctly, for none are exactly similar; but the following will give an idea of the proportions of the ingredients of a good brick earth, silica, three-fifths; alumina, one-fifth; iron, lime, magnesia, manganese, soda, and potash forming the other one-fifth.

The clay, when first raised from the mine or bed, is, in very rare instances, in a a state to allow of its being at once tempered and moulded. The material from which fire-bricks are manufactured has the appearance of ironstone and blue lias limestone, and some of it is remarkably hard, so that in this and many other instances in order to manufacture a good article, it is necessary to grind this material down into particles as fine as possible.

Large quantities of bricks are made from the surface marls of the new red sand-

Digitized by Google

stone and blue lias formations. These also require thorough grinding, but from their softer nature it can be effected by less powerful machinery.—*Chamberlain.*

Recently, some very valuable fire-bricks have been made from the refuse of the China Clay Works of Devonshire. The quartz and mica left after the *Kaolin* has been washed out are united with a small portion of inferior clay, and made into bricks. These are found to resist heat well, and are largely employed in the construction of metallurgical works. See CLAY.

The general process of brick making consists in digging up the clay in autumn; exposing it, during the whole winter, to the frost and the action of the air, turning it repeatedly, and working it with the spade; breaking down the clay lumps in spring, throwing them into shallow pits, to be watered and soaked for several days. The next step is to temper the clay, which is generally done by the treading of men or oxen. In the neighbourhood of London, however, this process is performed in a horse-mill. The kneading of the clay is, in fact, the most laborious but indispensable part of the whole business; and that on which, in a great measure, the quality of the bricks depends. All the stones, particularly the ferruginous, calcareous, and pyritous kinds, should be removed, and the clay worked into a homogeneous paste with as little water as possible.

Mr. F. W. Simms, C. E., communicated to the Institution of Civil Engineers, in April and May, 1843, an account of the process of brick-making for the Dover railway. The plan adopted is called slop-moulding, because the mould is dipped into water before receiving the clay, instead of being sanded as in making sand-stock bricks. The workman throws the proper lump of clay with some force into the mould, presses it down with his hands to fill the cavities, and then strikes off the surplus clay with a stick. An attendant boy, who has previously placed another mould in a water trough by the side of the moulding table, takes the mould just filled, and carries it to the floor, where he carefully drops the brick from the mould, on its flat side, and leaves it to dry; by the time he has returned to the moulding table, and deposited the empty mould in the water trough, the brickmaker will have filled the other mould for the boy to convey to the floor, where they are allowed to dry, and are then stacked in readiness for being burned in clamps or kilns. The average product is shown in the following Table:

Force employed.	Area of Land.		Duration of Season.	Produce per Week.	Produce per Season.
	Roods.	Perches.	Weeks.	Bricks.	Bricks.
1 moulder 1 temperer 1 wheeler 1 carrier boy 1 picker boy	2	14½	22	16,100	354,200

It appears that while the produce in sand-stock bricks is to that of slop-bricks, in the same time, as 30 to 16, the amount of labour is as 7 to 4; while the quantity of land, and the cost of labour per thousand, are nearly the same in both processes. The quantity of coal consumed in the kiln was at the rate of 10 cwt. 8lbs. per 1000 bricks. The cost of the bricks was 2*l.* 1*s.* 6*d.* per thousand. The slop-made bricks are fully 1 pound heavier than the sand-stock. Mr. Bennet states that at his brick-field at Cowley, the average number of sand-stock bricks moulded per day was 32,000; but that frequently so many as 37,000, or even 50,000, were formed. The total amount in the shrinkage of his bricks was $\frac{1}{8}$ of an inch upon 10 inches in length; but this differed with the different clays. Mr. Simms objects to the use of machinery in brick-making, because it causes economy only in the moulding, which constitutes no more than about one-eighth of the total expense.

The principal machines which have been worked for this purpose are three—1st, the pug-mill; 2nd, the wash-mill; 3rd, the rolling-mill.

The pug-mill is a cylinder, sometimes conical, generally worked in a vertical position, with the large end up. Down the centre of this is a strong revolving vertical shaft, on which are hung horizontal knives, inclined at such an angle as to form portions of a screw, that is, the knives follow each other at an angle forming a series of coils round this shaft. The bottom knives are larger, and vary in form, to throw off the clay, in some mills vertically, in others horizontally. Some have on the bottom of the shaft one coil of a screw, which throws the clay off more powerfully where it is wished to give pressure.

The action of this mill is to cut the clay with the knives during their revolution, and so work and mix it, that on its escape it may be one homogeneous mass, without any lumps of hard untempered clay; the clay being thoroughly amalgamated, and in

Digitized by Google

the toughest state in which it can be got by tempering. This mill is an excellent contrivance for the purpose of working the clay, in combination with rollers; but if only one mill is worked, it is not generally adopted, for, although it tempers, mixes, and toughens, it does not extract stones, crush up hard substances, or free the clay from all matters injurious to the quality of the ware when ready for market. This mill can be worked by either steam, water, or horse-power; but it takes much power in proportion to the quantity of work which it performs. If a brick is made with clay that has passed the pug-mill, and contains stones, or marl not acted on by weather, or lime-shells (a material very common in clays), or any other extraneous matter injurious to the brick, it is apparent from the action of this mill that it is not removed or reduced. The result is this, the bricks being when moulded in a very soft state of tempered material, or mud, considerably contract in drying, but the stones or hard substances not contracting, cause the clay to crack; and even if they should not be sufficiently large to do this in drying, during the firing of the bricks there is a still further contraction of the clay, and an expansion of the stone from the heat to which it is subjected, and the result is generally a faulty or broken brick, and on being drawn from the kilns, the bricks are found to be imperfect.

The earth, being sufficiently kneaded, is brought to the bench of the moulder, who works the clay into a mould made of wood or iron, and strikes off the superfluous matter. The bricks are next delivered from the mould, and ranged on the ground; and when they have acquired sufficient firmness to bear handling, they are dressed with a knife, and staked or built up in long dwarf walls, thatched over, and left to dry. An able workman will make, by hand, 5000 bricks in a day.

The different kinds of bricks made in England are principally *place bricks, grey and red stocks, marl facing bricks,* and *cutting bricks.* The place bricks and stocks are used in common walling. The marls are made in the neighbourhood of London, and used in the outside of buildings, they are very beautiful bricks, of a fine yellow colour, hard, and well burnt, and, in every respect, superior to the stocks. The finest kind of marl and red bricks, called cutting bricks, are used in the arches over windows and doors, being rubbed to a centre, and gauged to a height.

Bricks, in this country, are generally baked either in a clamp or in a kiln. The latter is the preferable method, as less waste arises, less fuel is consumed, and the bricks are sooner burnt. The kiln is usually 13 feet long, by 10½ feet wide, and about 12 feet in height. The walls are one foot two inches thick, carried up a little out of the perpendicular, inclined towards each other at the top. The bricks are placed on flat arches, having holes left in them resembling lattice-work; the kiln is then covered with pieces of tiles and bricks, and some wood put in, to dry them with a gentle fire.

This continues two or three days before they are ready for burning, which is known by the smoke turning from a darkish colour to semi-transparency. The mouth or mouths of the kiln are now dammed up with a *shinlog*, which consists of pieces of bricks piled one upon another, and closed with wet brick earth, leaving above it just room sufficient to receive a fagot. The fagots are made of furze, heath, brake, fern, &c., and the kiln is supplied with these until its arches look white, and the fire appears at the top; upon which the fire is slackened for an hour, and the kiln allowed gradually to cool. This heating and cooling is repeated until the bricks are thoroughly burnt, which is generally done in 48 hours. One of these kilns will hold about 20,000 bricks.

Clamps are also in common use. They are made of the bricks themselves, and generally of an oblong form. The foundation is laid with *place brick*, or the driest of those just made, and then the bricks to be burnt are built up, tier upon tier, as high as the clamp is meant to be, with two or three inches of breeze or cinders strewed between each layer of bricks, and the whole covered with a thick stratum of breeze. The fire-place is perpendicular, about three feet high, and generally placed at the west end; and the flues are formed by gathering or arching the bricks over, so as to leave a space between each of nearly a brick wide. The flues run straight through the clamp, and are filled with wood, coals, and breeze, pressed closely together. If the bricks are to be burnt off quickly, which may be done in 20 or 30 days, according as the weather may suit, the flues should be only at about six feet distance; but if there be no immediate hurry, they may be placed nine feet asunder, and the clamp left to burn off slowly.

The following remarks by Mr. H. Chamberlain, on the drying of bricks, have an especial value from the great experience of that gentleman, and his careful observation of all the conditions upon which the preparation of a good brick depends.

"The drying of bricks ready for burning is a matter of great importance, and requires more attention than it generally receives. From hand-made bricks we have to evaporate some 25 per cent. of water before it is safe to burn them. In a work requiring

Digitized by Google

the make of 20,000 bricks per day, we have to evaporate more than 20 tons of water every 24 hours. Hand-made bricks lose in drying about one-fourth of their weight, and in drying and burning about one-third. The average of machine bricks—those made of the stiff plastic clay—do not lose more than half the above amount from evaporation, and are, therefore, of much greater specific gravity than hand-made ones.

"The artificial drying of bricks is carried on throughout the year uninterruptedly in sheds having the floor heated by fires; but this can only be effected in districts where coal is cheap. The floors of these sheds are a series of tunnels or flues running through the shed longitudinally. At the lower end is a pit, in which are the furnaces; the fire travels up the flues under the floor of the shed, giving off its heat by the way, and the smoke escapes at the upper end, through a series of (generally three or four) smaller chimneys or stacks. The furnace end of these flues would naturally be much more highly heated than the upper end near the chimneys. To remedy this, the floor is constructed of a greater thickness at the fire end, and gradually diminishes to within a short distance of the top. By this means, and by the assistance of dampers in the chimneys, it is kept at nearly an equal temperature throughout. Bricks that will bear rapid drying, such as are made from marly clays or very loamy or siliceous earths, will be fit for the kiln in from 12 to 24 hours. Before the duty was taken off bricks, much dishonesty was practised by unprincipled makers, where this drying could be carried on economically. Strong clays cannot be dried so rapidly. These sheds are generally walled round with loose bricks, stacked in between each post or pillar that supports the roof. The vapour given off from the wet bricks, rising to the roof, escapes. This system of drying is greatly in advance of that in the open air, for it produces the ware, as made, without any deterioration from bad weather; but the expense of fuel to heat these flues has restricted its use to the neighbourhood of collieries. In 1845 attention was turned to the drying of bricks, and experiments carried out in drying the ware with the waste heat of the burning kilns. The caloric after having passed the ware in burning, was carried up a flue raised above the floor of the shed, and gave off its spent heat for drying the ware. Although this kiln was most useful in proving that the waste heat of a burning kiln is more than sufficient to dry ware enough to fill it again, it was abandoned on account of the construction of the kiln not being good.

"Another system of drying is in close chambers, by means of steam, hot water, or by flues heated by fire under the chambers. I will, therefore, briefly describe the steam chamber as used by Mr. Beart. This is a square construction or series of tunnels or chambers, built on an incline of any desired length; and at some convenient spot near the lower end is fixed a large steam boiler, at a lower level than the drying chamber. From the boiler the main steam pipe is taken along the bottom or lower end of the chamber, and from this main, at right angles, run branch pipes of four inches diameter up the chamber, two feet apart, and at about three feet from the top or arch. From there being so close and shallow a chamber between the heating surface of the pipes and the top, and so large an amount of heating surface in the pipes, the temperature is soon considerably raised. At the top and bottom ends are shutters or lids, which open for the admission of the green ware at the upper end, and for the exit of the dry ware at the lower end of the chamber. Over the steam pipes are fixed iron rollers, on which the trays of bricks, as brought from the machine, are placed, the insertion of one tray forcing the tray previously put in further on, assisted in its descent by the inclination of the construction. The steam being raised in the boiler flows through the main into those branch pipes in the chamber, and from the large amount of exposed surface becomes condensed, giving off its latent heat. From the incline given to the pipes in the chamber, and from the main pipe also having a fall towards the boiler, the whole of the warm water from the condensed steam flows to the boiler to be again raised to steam, sent up the pipes, and condensed intermittently. The steam entering at the lower end of the chamber, it is of course warmer than the upper end. Along the top end or highest part of the chamber is a series of chimneys and windguards, through which the damp vapour escapes. The bricks from the machine enter at this cooler end charged with warm vapour, and as the make proceeds are forced down the chamber as each tray is put in. Thus, those which were first inserted reach a drier and warmer atmosphere, and, on their arrival at the lower end, come out dry bricks, in about 24 hours, with the strongest clays. In some cases the waste steam of the working engine is sent through these pipes and condensed. Bricks will dry soundly without cracking, &c., in these close chambers, when exposed to much greater heat than they would bear on the open flue first described, or the open air, from the circumstance of the atmosphere, although very hot, being so highly charged with vapour. In practice, these steam chambers have proved many principles, but they are not likely to become universal, for they are very expensive in erection on account of the quantity of steam pipes, and involve constant expense in fuel, and

Digitized by Google

require attention in the management of the steam boiler; but their greatest defect is the want of a current of hot air through the chamber to carry off the excess of vapour faster than is now done. The attaining a high degree of temperature in these chambers is useless, unless there is a current to carry off the vapour. Why should this piping be used, or steam at all, when we have a large mass of heat being constantly wasted, night and day, during the time the kilns are burning? and after the process of burning the kiln is completed, we have pure hot air flowing, from 48 to 60 hours, from the mass of cooling bricks in the kilns, free from carbon or any impurities; this could be directed through the drying chambers, entering in one constant flow of hot dry air, and escaping in warm vapour. The waste heat during the process of burning can be taken up flues under the chamber, and thereby all the heat of our burning kilns may be economised and a great outlay saved in steam pipes, boilers, and attention. It must not be forgotten also, that so large an atmospheric condenser as the steam chamber is not heated without a considerable expenditure in fuel. This drying by steam is a great stride in advance of the old flued shed, but practical men must see the immense loss incurred constantly from this source of the spent heat of the burning kilns, and that by economising it, an immense saving will be effected in the manufacture. The kilns are constructed as near the lower end of these chambers as convenient."

A kiln for attaining the object of the one built in 1846 by Mr. Chamberlain is now at work at Epsom, at Mr. Hand's brick-works; but with this difference, that the smoke is consumed. The drying shed is kept quite close, that the hot flues may raise the temperature so high as to dry the ware. In this kiln the heated gases escape from the top, after passing up through the ware, into flues, and are carried to the ground, and thence into the drying shed, which is a very large construction in proportion to the size of the kiln, and holds nearly sufficient ware to fill four kilns. In this shed the heat passes up a hollow wall, about six feet high, and after running through the length of the shed on one side, returns down similar flues on the opposite side of the shed, and is again carried to the kiln, through the bottom of which it passes in two close flues between the three kiln-furnaces, with the exception of small apertures through which the heat enters to consume the smoke. From these return flues the spent gases rise up a shaft at the end of the kiln. One result of carrying these return flues through the kiln, is the attaining a great draft or suction in the flues to carry off vapour.

The common brick kiln is a rectangular building, generally open, but sometimes arched over. In the side walls and opposite to each other, are built fireplaces, or holes for the insertion of the fuel. The furnaces are formed in the setting of the kiln with unburnt bricks, and above these the kiln is filled as above described. In these kilns, from the raw ware forming the furnace, the flash of the flame, from the fires in the walls, too often vitrefies and destroys the nearest bricks. In the open kiln, as the fire or heat reaches to the top, the fireman soils or earths it down, which throws the draught to another part more backward; and, as it continues to rise, he proceeds with this operation until all the top is earthed in; he then continues the firing until the whole has sunk, by the contraction of the clay in the fire, to the desired depth. The fire-holes are then stopped up with mud, and the kiln is left to cool gradually. If the air were admitted too rapidly while the kiln was at this intense heat, it would cause bricks, made with strong clays, to fly to pieces like glass; it is, in fact, the process of annealing. Cooling too quickly also affects, in many clays, the colour of the bricks.

Temporary kilns are constructed in the country with unburnt bricks, and called clamps. In Staffordshire, the bricks are burnt in small round kilns, called ovens, which hold from 7000 to 8000 bricks each; these are burnt from fire in the walls round the ovens, and the raw ware is set in, so as to form a flue from each fire, to direct the flame to the centre. These ovens burn very quickly, and a most intense heat can be obtained in them. Mr. Chamberlain must be again quoted on the burning of bricks: —

"I will now more fully describe a principle of burning which I have had in practice for the last six years, and which I can therefore recommend with great confidence. The great object in brick-burning is to attain a sufficient heat to thoroughly burn the ware with as small a consumption of coal as possible; and with nearly an equal distribution of the heat over all parts, so that the whole of the ware, being subjected to the same temperature, may contract equally in bulk, and be of one uniform colour throughout. The advantage is also gained of burning in much less time than in the old kilns, which, on an average, took a week; and the management is so simplified that any man, even though not at all conversant with the manufacture, after he has seen one kiln burnt, will be able to manage another; and the last, though not least, advantage is, that of delivering up to us the waste heat at the ground level,

Digitized by Google

or under the floor of the kiln, to be used in drying the green ware, or in partially burning the next kiln.

"Hitherto the heat has been applied by a series of fireplaces, or flues and openings round the kiln, each exposed to the influence of the atmosphere; and in boisterous weather it is very difficult to keep the heat at all regular, the consequence of which is, the unequal burning we often see. The improvements sought by experimentalists have been the burning the goods equally, and, at the same time, more economically. These are obtained by the patent kilns, as improved by Mr. Robert Scrivener, of Shelton, in the Staffordshire Potteries. The plan is both simple and effective, and is as follows: — A furnace is constructed in the centre of the kiln, much below the floor level, and so built that the heat can be directed to any part of the kiln at the pleasure of the fireman. First, the heat is directed up a tube in the centre to the top of the oven or kiln, and, as there is no escape allowed to take place there, it is drawn down through the goods by the aid of flues in connection with a chimney. Thus, all the caloric generated in the furnace is made use of, and, being central, is equally diffused throughout the mass; but, towards the bottom, or over the exit-flues, the ware would not be sufficiently burnt without reversing the order of firing. In order to meet this requirement there is a series of flues under the bottom, upon which the goods are placed, with small regulators at the end of each; these regulators, when drawn back, allow the fire to pass under the bottom, and to rise up among the goods which are not sufficiently fired, and thus the burning is completed. By means of these regulators the heat may be obtained exactly the same throughout; there is, therefore, a greater degree of certainty in firing, and a considerable saving of fuel, with the entire consumption of the smoke. From the fire or draught being under command, so as to be allowed either to ascend or descend through the ware during the time of burning or cooling, the waste caloric can be economised and directed through the adjoining kiln in order to partially burn it, or be used in drying off the raw wares on flues or in chambers. I have found the saving of fuel in these kilns, over the common kiln, 50 per cent.; and to give an idea of the facility with which they can be worked, it is common for my men to fill the kiln, burn, cool, and discharge it in six days."— *Chamberlain.*

In France attempts were long ago made to substitute animals and machines for the treading of men's feet in the clay kneading pit; but it was found that their schemes could not replace, with advantage, human labour where it is so cheap, particularly for separating the stones and heterogeneous matters from the loam. The more it is worked, the denser, more uniform, and more durable, the bricks which are made of it. A good French workman, in a day's labour of 12 or 13 hours, it has been said, is able to mould from 9000 to 10,000 bricks, 9 inches long, 4½ inches broad, and 2¼ thick; but he must have good assistants under him. In many brick-works near Paris, screw-presses are now used for consolidating the bricks and paving tiles in their moulds. M. Mollerat employed the hydraulic press for the purpose of condensing pulverised clay, which, after baking, formed beautiful bricks; but the process was too tedious and costly. An ingenious contrivance for moulding bricks mechanically is said to be employed near Washington, in America. This machine moulds 30,000 in a day's work of 12 hours, with the help of one horse, yoked to a gin wheel, and the bricks are so dry when discharged from their moulds, as to be ready for immediate burning. The machine is described, with figures, in the "Bulletin de la Société d'Encouragement" for 1819, p. 361. *See further on, an account of our recent patents.*

Mechanical Brick moulding. — Messrs. Lyne and Stainford obtained, in August, 1825, a patent for a machine for making a considerable number of bricks at one operation. It consists, in the first place, of a cylindrical pug-mill of the kind usually employed for comminuting clay for bricks and tiles, furnished with rotatory knives, or cutters, for breaking the lumps and mixing the clay with the other materials of which bricks are commonly made. Secondly, of two movable moulds, in each of which fifteen bricks are made at once; these moulds being made to travel to and fro in the machine for the purpose of being alternately brought under the pug-mill to be filled with the clay, and then removed to situations where plungers are enabled to act upon them. Thirdly, in a contrivance by which the plungers are made to descend, for the purpose of compressing the material and discharging it from the mould in the form of bricks. Fourthly, in the method of constructing and working trucks which carry the receiving boards, and conduct the bricks away as they are formed.

Fig. 273 exhibits the general construction of the apparatus; both ends of which being exactly similar, little more than half of the machine is represented. *a* is the cylindrical pug-mill, shown partly in section, which is supplied with the clay and other materials from a hopper above; *b b* are the rotatory knives or cutters, which

Digitized by Google

are attached to the vertical shaft, and, being placed obliquely, press the clay down towards the bottom of the cylinder, in the act of breaking and mixing it as the shaft

273

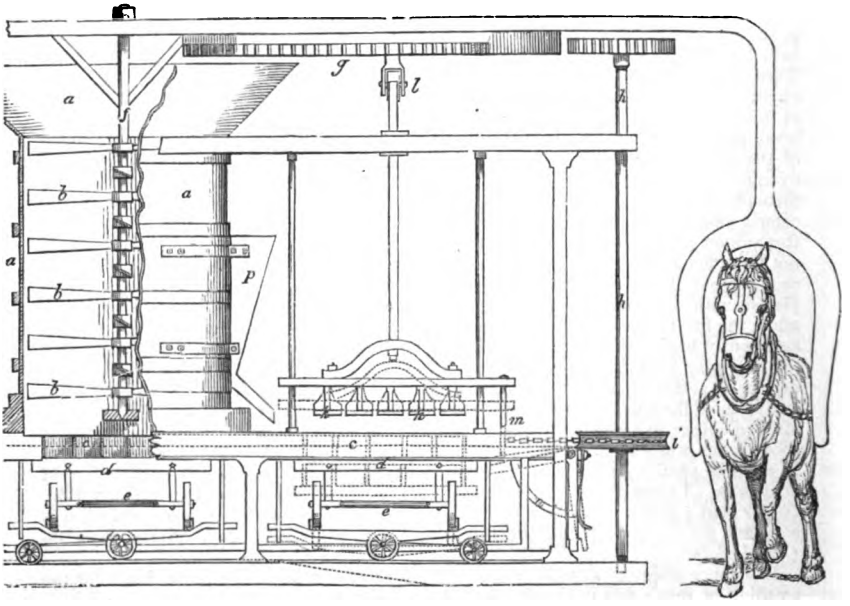

revolves. The lower part of the cylinder is open; and immediately under it the mould is placed in which the bricks are to be formed. These moulds run to and fro upon ledges in the side frames of the machine; one of the moulds only can be shown by dots in the figure, the side rail intervening: they are situated at *c c*, and are formed of bars of iron crossing each other, and encompassed with a frame. The mould resembles an ordinary sash window in its form, being divided into rectangular compartments (fifteen are proposed in each) of the dimensions of the intended bricks, but sufficiently deep to allow the material, after being considerably pressed in the mould, to leave it, when discharged, of the usual thickness of a common brick.

The mould being open at top and bottom, the material is allowed to pass into it, when situated exactly under the cylinder; and the lower side of the mould, when so placed, is to be closed by a flat board *d*, supported by the truck *e*, which is raised by a lever and roller beneath, running upon a plane rail with inclined ends.

The central shaft, *f*, is kept in continual rotatory motion, by the revolution of the upper horizontal wheel *g*, of which it is the axis; and this wheel may be turned by a horse yoked to a radiating arm, or by any other means. A part of the circumference of the wheel *g*, has teeth which are intended at certain periods of its revolution to take into a toothed pinion, fixed upon the top of a vertical shaft *h h*. At the lower part of this vertical shaft there is a pulley *i*, over which a chain is passed that is connected to the two moulds *c*, and to the frame in which the trucks are supported; by the rotation of the vertical shaft, the pulley winds a chain, and draws the moulds and truck frames along.

The clay and other material having been forced down from the cylinder into the mould, the teeth of the horizontal wheel *g*, now come into gear with the pinion upon *h*, and turn it and the shaft and pulley *i*, by which the chain is wound, and the mould at the right hand of the machine brought into the situation shown in the figure; a scraper or edge-bar under the pug-mill having levelled the upper face of the clay in the mould, and the board *d*, supported by the truck *e*, formed the flat under side.

The mould being brought into this position, it is now necessary to compress the materials, which is done by the descent of the plungers, *k k*. A friction-roller, *l*, pendant from the under side of the horizontal wheel, as that wheel revolves, comes in contact with an inclined plane, at the top of the shaft of the plungers; and, as the friction-roller passes over this inclined plane, the plungers are made to descend into

Digitized by Google

the mould, and to compress the material; the resistance of the board beneath causing the clay to be squeezed into a compact state. When this has been effectually accomplished, the further descent of the plungers brings a pin, *m*, against the upper end of a quadrant catch-lever, *n*, and, by depressing this quadrant, causes the balance-lever upon which the truck is now supported to rise at that end, and to allow the truck with the board *d* to descend, as shown by dots; the plungers at the same time forcing out the bricks from the moulds, whereby they are deposited upon the board *d*; when, by drawing the truck forward out of the machine, the board with the bricks may be removed, and replaced by another board. The truck may then be again introduced into the machine, ready to receive the next parcel of bricks.

By the time that the discharge of the bricks from this mould has been effected, the other mould under the pug cylinder has become filled with the clay, when the teeth of the horizontal wheel coming round, take into a pinion upon the top of a vertical shaft, exactly similar to that at *h*, but at the reverse end of the machine, and cause the moulds and the frame supporting the trucks to be slidden to the left end of the machine; the upper surface of the mould being scraped level in its progress, in the way already described. This movement brings the friction-wheel, *o*, up the inclined plane, and thereby raises the truck, with the board to the under side of the mould, ready to receive another supply of clay; and the mould at the left-hand side of the machine being now in its proper situation under the plungers, the clay becomes compressed, and the bricks discharged from the mould in the way described in the former instance; when this truck being drawn out, the bricks are removed to be dried and baked, and another board is placed in the same situation. There are boxes, *p*, upon each side of the pug cylinder containing sand, at the lower parts of which small sliders are to be opened (by contrivances not shown in the figure) as the mould passes under them, for the purpose of scattering sand upon the clay in the mould to prevent its adhering to the plungers. There is also a rack and toothed sector, with a balance-weight connected to the inclined plane at the top of the plunger-rods, for the purpose of raising the plunger after the friction-roller has passed over it; and there is a spring acting against the back of the quadrant-catch, for the purpose of throwing it into its former situation, after the pin of the plunger has risen.

An effective machine for brick-making is that patented by Mr. Edward Jones, of Birmingham, in August, 1835. His improvements are described under four heads: the first applies to a machine for moulding the earth into bricks in a circular frame-plate horizontally, containing a series of moulds or rectangular boxes, standing radially round the circumference of the circular frame, into which boxes successively the clay is expressed from a stationary hopper as the frame revolves, and after being so formed, the bricks are successively pushed out of their boxes, each by a piston acted upon by an inclined plane below. The second head of the specification describes a rectangular horizontal frame, having a series of moulding boxes placed in a straight range, which are acted upon for pressing the clay by a corresponding range of pistons fixed in a horizontal frame, worked up and down by rods extending from a rotatory crank shaft, the moulding boxes being allowed to rise for the purpose of enabling the pistons to force out the bricks when moulded, and leave them upon the bed or board below. The third head applies particularly to the making of tiles for the flooring of kilns in which malt or grain is to be dried. There is in this contrivance a rectangular mould, with pointed pieces standing up for the purpose of producing air-holes through the tiles as they are moulded, which is done by pressing the clay into the moulds upon the points, and scraping off the superfluous matter at top by hand. The fourth or last head applies to moulding chimney-pots in double moulds, which take to pieces for the purpose of withdrawing the pot when the edges of the slabs or sides are sufficiently brought into contact.

274

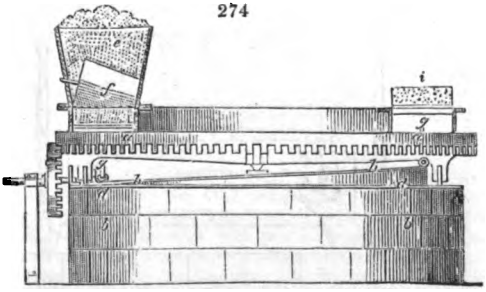

Fig. 274 represents, in elevation, the first-mentioned machine for moulding bricks. The moulds are formed in the face of a circular plate or wheel, *a a*, a portion of the upper surface of which is represented in the horizontal view, *fig.* 275. Any convenient number of these moulds are set readily in the wheel, which is mounted upon a central pivot, supported by the masonry *b b*. There is a rim

Digitized by Google

of teeth round the outer edge of the wheel *a a*, which take into a pinion, *c*, on a shaft connected to the first mover; and by these means the wheel *a*, with the moulding boxes, is made to revolve horizontally, guided by arms with anti-friction rollers, which run round a horizontal plate, *a a*, fixed upon the masonry.

275

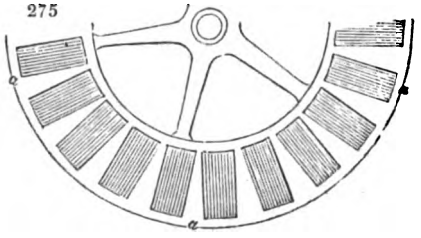

A hopper, *e*, filled with the brick earth, shown with one of the moulding boxes in section, is fixed above the face of the wheel in such a way, that the earth may descend from the hopper into the several moulding boxes as the wheel passes round under it, the earth being pressed into the moulds, and its surface scraped off smooth by a conical roller, *f*, in the bottom of the hopper.

Through the bottom of each moulding box there is a hole for the passage of a piston rod, *g*, the upper end of which rod carries a piston with a wooden pallet upon it acting within the moulding box; and the lower end of this rod has a small anti-friction roller, which, as the wheel *a* revolves, runs round upon the face of an oblique ring or inclined way, *h h*, fixed upon the masonry.

The clay is introduced into the moulding boxes from the hopper fixed over the lowest part of the inclined way *h*; and it will be perceived that as the wheel revolves, the piston rods, *g*, in passing up the inclined way, will cause the pistons to force the new-moulded bricks, with their pallet, or board, under them, severally up the mould, into the situation shown at *i*, in *fig.* 274, whence they are to be removed by hand. Fresh pallets being then placed upon the several pistons, they, with the moulds, will be ready for moulding fresh bricks, when, by the rotation of the wheel, *a*, they are severally brought under the hopper, the pistons having sunk to the bottoms of their boxes, as the piston rods passed down the other side of the inclined way *h*.

The second head of the invention is another construction of apparatus for moulding bricks, in this instance in a rectangular frame. *Fig.* 276 is a front elevation of the machine; *fig.* 277, a section of the same taken transversely. *a a* is the standard frame-work and bed on which the bricks are to be moulded. Near the corners of this standard frame-work, four vertical pillars, *b b*, are erected, upon which pillars the frame of the moulding boxes, *c*, slides up and down, and also the bar, *d*, carrying the rods of the pistons, *e e e*. These pistons are for the purpose of compressing the clay in the moulding box, and therefore must stand exactly over and correspond with the respective moulds in the frame *c*, beneath.

The sliding frame, *c*, constituting the sides and ends of the moulding boxes, is supported at each end by an upright sliding rod, *f*, which rods pass through guides fixed to the sides of the standard frame, *a a*, and at the lower end of each there is a roller, bearing upon the levers, *g*, on each side of the machine, but seen only in *fig.* 277, which levers, when depressed, allow the moulding boxes to descend and rest upon the bed or table of the machine *k k*.

276

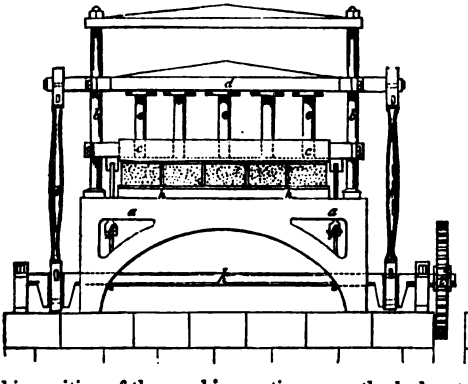

277

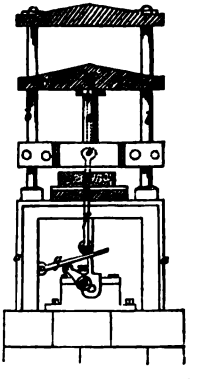

In this position of the machine resting upon the bed or table, the brick-earth is to be placed upon, and spread over, the top of the frame *c*, by the hands of workmen, when

Digitized by Google

the descent of the plunger or pistons *e e e* will cause the earth to be forced into the moulds, and the bricks to be formed therein. To effect this, rotatory power is to be applied to the toothed wheel *i*, fixed on the end of the main driving crank shaft *k k*, which on revolving will, by means of the crank rods *l l*, bring down the bar *a*, with the pistons or plunger *e e e*, and compress the earth compactly into the moulds, and thereby form the bricks.

When this has been done, the bricks are to be released from the moulds by the moulding frame, *c*, rising up from the bed, as shown in *fig.* 276, the pistons still remaining depressed, and bearing upon the upper surfaces of the bricks. The moulding frame is raised by means of cams, *m*, upon the crank shaft, which at this part of the operation are brought under the levers *g*, for the purpose of raising the cams and the sliding rods *f* into the position shown in *fig.* 277.

The bricks having been thus formed and released from their moulds, they are to be removed from the bed of the machine by pushing forward, on the front side, fresh boards or pallets, which of course will drive the bricks out upon the other side, whence they are to be removed by hand.

There is to be a small hole in the centre of each pallet, and also in the bed, for the purpose of allowing any superfluous earth to be pressed through the moulding boxes when the pistons descend. And in order to cut off the projecting piece of clay which would be thus formed on the bottom of the brick, a knife-edge is in some way connected to the bed of the machine, and as the brick slides over it, the knife separates the protuberant lump; but the particular construction of this part of the apparatus is considered to be of little importance, and the manner of effecting the object is not clearly stated in the specification.

Fig. 278 represents Mr. Hunt's machine. The principal parts consist of two cylinders, each covered by an endless web, and so placed as to form the front and back of a hopper, the two sides being iron plates, placed so that when the hopper is filled with tempered clay from the pug-mill, the lower part of the hopper, and consequently

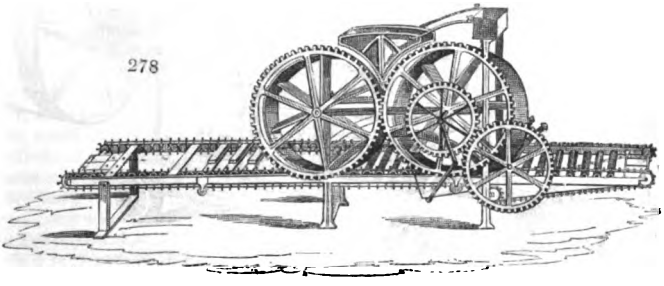

the mass of clay within it, has exactly the dimensions of a brick. Beneath the hopper an endless chain traverses simultaneously with the movement of the cylinders. The pallet-boards are laid at given intervals upon the chain, and being thus placed under the hopper, while the clay is brought down with a slight pressure, a frame with a wire stretched across it is projected through the mass of clay, cutting off exactly the thickness of the brick, which is removed at the same moment by the forward movement of the endless chain. This operation is repeated each time that a pallet-board comes under the hopper.

There are numerous machines in use for the manufacture of bricks. For the manufacture of perforated bricks, Mr. Beart's machine is the most generally employed. Mr. Chamberlain thus describes it:—"The most universally used die machine which has been extensively worked up to the present time is Mr. Beart's patent for perforated bricks. This gentleman, who is practically acquainted with these matters, in order to remedy the difficulties I have mentioned in expressing a mass of clay through a large aperture or die, hung a series of small tongues or cores, so as to form hollow or perforated bricks. By this means the clay was forced in its passage through the die into the corners, having the greater amount of friction now in the centre. Still, the bricks came out rough at the edge with many clays, or with what is termed a jagged edge. The water die was afterwards applied to this machine, and the perforated bricks, now so commonly used in London, are the result. In Mr. Beart's machine, which is a pug-mill, the clay is taken after passing through the rolling-mill, and being fed in at the top, is worked down by the knives. At the bottom are two horizontal clay-boxes, in which a plunger works backwards and forwards. As soon as it has reached the extremity of its stroke, or forced the clay of

Digitized by Google

one box through the die, the other box receiving during this time its charge of clay from the pug-mill, the plunger returns and empties this box of clay through a die on the opposite side of the machine. The result is, that while a stream of clay is being forced out on one side of the machine the clay on the opposite side is stationary, and can, therefore, be divided into a series of five or six bricks with the greatest correctness by hand. Some of these machines have both boxes on one side and the plungers worked by cranks. This machine cannot make bricks unless the clay has previously passed through rollers, if coarse; for anything at all rough, as stone or other hard substance, would hang in the tongues of the die. But the clay being afterwards pugged in the machine is so thoroughly tempered and mixed, that the bricks when made cannot be otherwise than good, provided they are sufficiently fired. As to the utility of hollow or perforated bricks, that is a matter more for the consideration of the architect or builder than for the brick-maker. Perforated bricks are a fifth less in weight than solid ones, which is a matter of some importance in transit; but it takes considerably more power to force the clay through those dies than for solid brick-making. In the manufacture of perforated bricks, there is also a royalty or patent right to be paid to Mr. Beart."

Mr. Chamberlain's own machine is in principle as follows (*fig.* 279):—The clay is fed into a pug-mill, placed horizontally, which works and amalgamates it, and then forces it

279

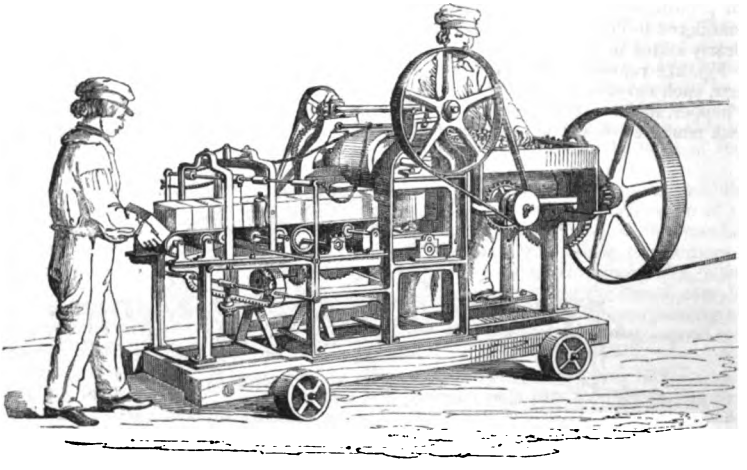

off through a mouth-piece or die of about 65 square inches, or about half an inch deeper and half an inch longer than is required for the brick, of a form similar to a brick on edge, but with corners well rounded off, each corner forming a quarter of a 3-inch circle, for clay will pass smoothly through an aperture thus formed, but not through a keen angle. After the clay has escaped from the mill it is seized by four rollers, covered with a porous fabric (moleskin), driven at a like surface speed from connection with the pug-mill. These rollers are two horizontal and two vertical ones, having a space of 45 inches between them; they take this larger stream of rough clay, and press or roll it into a squared block, of the exact size and shape of a brick edgeways, with beautiful sharp edges, for the clay has no friction, being drawn through by the rollers instead of forcing itself through, and is delivered in one unbroken stream. The rollers in this machine, perform the functions of the die in one class of machinery, and of the mould in the other. They are, in fact, a die with rotating surfaces. By hanging a series of mandrels or cores between these rollers, or by merely changing the mouth-piece, we make hollow and perforated bricks, without any alteration in the machine.

Messrs. Bradley and Craven, of Wakefield, have invented a very ingenious brick-making machine: —

It consists of a vertical pug-mill of a peculiar form, and greatly improved construction, into the upper part of which the clay is fed. In this part of the apparatus the clay undergoes a most perfect tempering and mixing, and on reaching the bottom of the mill, thoroughly amalgamated, is forcibly pressed into the moulds of the form and size of brick required, which are arranged in the form of a circular revolving table.

Digitized by Google

As this table revolves, the piston-rods of the moulds ascend an incline plane, and gradually lift the bricks out of the moulds, whence they are taken from the ma-

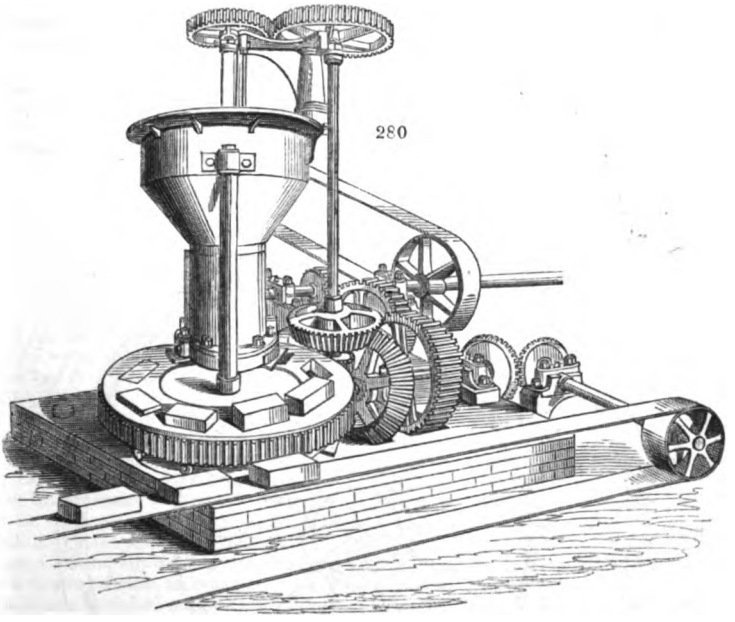

chine by a boy, and placed on an endless band which carries the bricks direct to the waller, thus effecting the saving of the floor room.

The speed of the several parts of the machine is so judiciously arranged, that the operations of pugging, moulding, and delivering proceed simultaneously in due order, the whole being easily driven by a steam engine of about six-horse power, which, at the ordinary rate of working, will make 12,000 bricks per day; or, with eight-horse power, from 15,000 to 18,000.

In consequence of the perfect amalgamation of the clay, and the great pressure to which it is subjected in the moulds, the bricks produced by this machine are perfect; and from the stiffness of the clay used, less water has to be evaporated in the drying, thus saving one half the time required for hand-made bricks, and avoiding the risk of loss from bad weather.

The following remarks by Dr. Ure are deserving attention:—

"The brick kilns and clamps round London and other large cities, which are fired with the breeze rubbish collected from dust holes that contain the refuse of kitchens, &c., emit, in consequence, most unpleasant effluvia; but brick kilns fired with clean coke or coals give out no gases of a more noxious nature than common household fires. The consideration of this subject was closely pressed upon my attention on being consulted concerning an injunction issued by the Chancellor against a brick clamp in the Isle of Wight, fired with clean coke cinders from the steam-engine furnace at Portsmouth dockyard. The bricks, being of the description called sand stock, were of course made in moulds very slightly dusted with sand, to make them fall freely out. The sand was brought from Portsmouth Harbour, and, on being subjected to a degree of heat more intense certainly than it could suffer in the clamp, was thought to give out traces of hydrochloric acid.

"As it is well known to the chemist that common salt strongly ignited in contact with moist sand will emit hydrochloric acid, there was nothing remarkable in the above observation; but I ascertained that the sand with which the moulds were strewed would give out no hydrochloric acid at a heat equal at least to what the bricks were exposed to in a clamp 10 or 12 feet high, and fired at its bottom only with a layer of cinders 3 or 4 inches thick. But I further demonstrated that the entire substance of the brick, with its scanty film of sand, on being exposed to ignition in a suitable apparatus, gave out — not hydrochloric or any other corrosive acid, but ammonia gas. Hence, the allegations that the clamp sent forth a host of acid

Digitized by Google

gases to blight the neighbouring trees were shown to be utterly groundless; on the contrary, the ammonia evolved from the heated clay would act beneficially upon vegetation, while it was too small in quantity to annoy any human being. A few yards to leeward of a similar clamp in full activity, I could perceive no offensive odour. All ferruginous clay, when exposed to the atmosphere, absorbs ammonia from it, and of course emits it again on being gently ignited."

A very ingenious and simple brick-making machine was constructed and patented by Mr. Roberts, of Falmouth, and it has been extensively worked by him in the parish of Mylor.

Fig. 281 shows a plan of machinery combined, according to Mr. Roberts's inven-

281

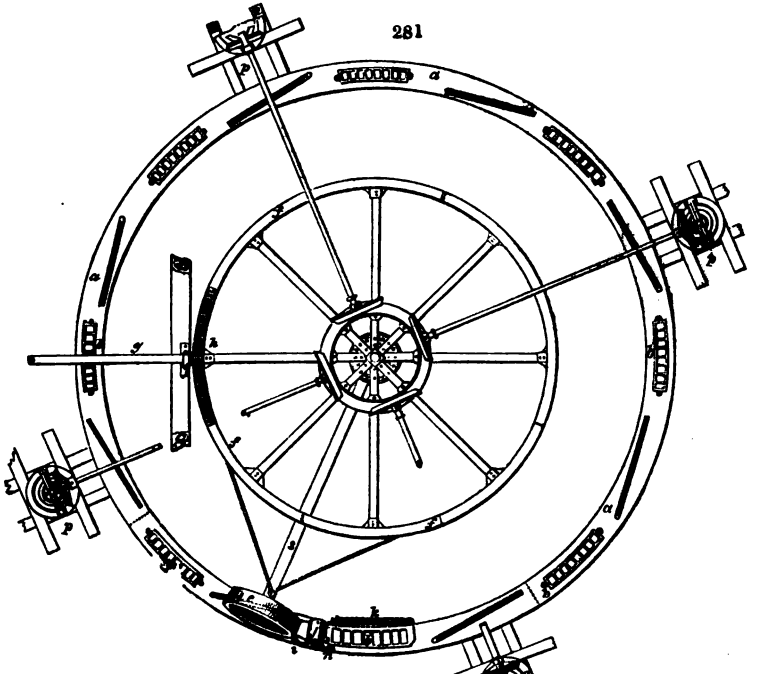

282

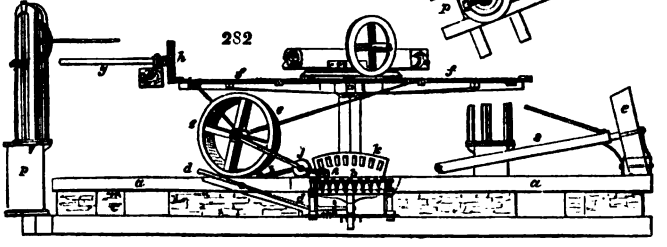

tion; and *fig.* 282 shows a side elevation, partly in section. *a* is a circular track, on which are fixed series of moulds, *b*, at intervals, the form of moulds being according to the shape of bricks or tiles to be made. Each set of moulds is provided with movable bottoms (one for each mould), which are connected to the bar *c*, so that they may be all simultaneously lifted by the lever *d*.

In *fig.* 282 one set of the moulds and apparatus used therewith is shown, and the several sets of moulds (the positions of which are in the drawing, *fig.* 281) are similarly provided. *e* is a roller, which is moved round on the track *a*, by means of the frame *f*, which receives motion from a steam engine or other power, by means of the shaft *g*, the cog-wheel *h*, and circular-toothed rack fixed on the frame *f*. The clay, or brick earth, is filled into the moulds, and the roller *e* presses the same into the

Digitized by Google

moulds as it rolls over them; *i* is a scraper which, following the roller *e*, removes any excess of clay or brick earth from the moulds; and *j* is a smaller roller which acts as a balance, to prevent the cutter from rising; *k* is a pressing plate attached to the bar *c*, and is raised at the same time by the lever *d*. The roller *e*, in its further progress, passes over and presses down the plate *k*, which completes the pressure; *e* then passes on and presses down the lever *d*, by which all the movable bottoms of the moulds will be raised with the bricks or tiles thereon. The whole of the pistons and bar, *c*, are kept up by the stop *l*, which works by a spring, and is removed by the treadle *m*, as soon as the bricks or tiles are taken away; *n* are small rollers, fixed to the frame *o*, to which the cutter or scraper is attached.

Floating bricks are a very ancient invention: they are so light as to swim in water; and Pliny tells us that they were made at Marseilles, at Colento, in Spain, and at Pittane, in Asia. This invention, however, was completely lost until M. Fabroni published a discovery of a method to imitate the floating bricks of the ancients. According to Posidonius, these bricks are made of a kind of argillaceous earth, which was employed to clean silver plate. But as it could not be our tripoli, which is too heavy to float in water, M. Fabroni tried several experiments with mineral agaric, guhr, lac-lunæ, and fossil meal, which last was found to be the very substance of which he was in search. This earth is abundant in Tuscany, and is found near Casteldelpiano, in the territories of Sienna. According to the analysis of M. Fabroni, it consists of 55 parts of siliceous earth, 15 of magnesia, 14 of water, 12 of alumina, 3 of lime, and 1 of iron. It exhales an argillaceous odour, and, when sprinkled with water, throws out a light-whitish smoke. It is infusible in the fire, and, though it loses about an eighth part of its weight, its bulk is scarcely diminished. Bricks composed of this substance, either baked or unbaked, float in water; and $\frac{1}{20}$th part of clay may be added to their composition without taking away their property of swimming. These bricks resist water, unite perfectly with lime, are subject to no alteration from heat or cold, and the baked differ from the unbaked only in the sonorous quality which they have acquired from the fire. Their strength is little inferior to that of common bricks, but much greater in proportion to their weight; for M. Fabroni found that a floating brick, measuring 7 inches in length, $4\frac{1}{2}$ in breadth, and 1 inch 8 lines in thickness, weighed only $14\frac{1}{4}$ oz., whereas a common brick weighed 5 lbs. $6\frac{3}{4}$ oz.

As an experiment, Fabroni constructed the powder magazine of a ship of these bricks; the vessel was set on fire, and sank without exploding the powder.

This earth has been found near Clermont, in the Auvergne. Ehrenberg has shown that it is entirely composed of microscopic siliceous shells. Bricks composed of this earth weigh only half as much as the ordinary ones.

Fire bricks are made extensively in the neighbourhood of Newcastle-on-Tyne and at Stourbridge. For the analyses of the clays of which these and others are constructed, see CLAY.

Stone Bricks.—These are manufactured at Neath, in Glamorganshire, and are very much used in the construction of copper furnaces at Swansea.

The materials of which the bricks are made are brought from a quarry in the neighbourhood. They are very coarse, being subjected to a very rude crushing operation under an edge stone, and, from the size of the pieces, it is impossible to mould by hand. There are three qualities, which are mixed together with a little water, so as to give the mass coherence, and in this state it is compressed by the machine into a mould. The brick which results is treated in the ordinary way, but it resists a much greater heat than the Stourbridge clay brick, expands more by heat, and does not contract to its original dimensions. The composition of the three materials is as follows:—

	From Pendreyn.	From Dinas.	
Silica - - - - -	94·05	100·	91·95
Alumina, with a trace of ox. iron	4·55	traces	8·05
Lime and magnesia - - -	-	traces	traces
	98·60	100·	100·00

—*Dr. Richardson: Knapp's Technology.*

Since the introduction of the Siemens gas furnace, and the Bessemer process for cast steel manufacture, into countries which, unlike our own, are not well supplied with fire-resisting materials, great difficulty has been experienced in obtaining bricks of a sufficiently refractory character to withstand the extremely high temperature developed in the melting chamber, as well as the sudden and violent alternations in other parts of the furnace. In order to obviate this difficulty, Mr. Joseph Khern, a well-known Austrian metallurgist, has introduced a plan of manufacturing siliceous bricks, which he describes as being superior to any other refractory material obtained in Austria. The chief ingredient is quartz of the highest possible degree of purity, especial care being taken to reject all such samples as show any admixture of iron

Digitized by Google

or copper pyrites, carbonate of lime, or even mica, or felspar. The quartz so selected is heated in quantities of from 10 to 15 tons, in a Rumford lime-kiln for 10 or 12 hours, till it attains a full red heat, when it is quenched in water; the fragments are then cleaned by a simple jigging process, and subsequently are crushed under a tilt hammer, sufficiently fine to pass through a sieve having 60 holes to the square inch. The hammer weighs 2½ cwts., and is capable of crushing 3½ tons of quartz in 12 hours. Two varieties of clay are used, differing slightly in plasticity; they are prepared by careful weathering, pulverisation under light stamp heads, and grinding under edge rollers; a final sifting is performed through a sieve of 600 apertures to the inch. The purest quartz is reserved for the first quality of brick, which have to resist the greatest heat; while the second and third class, for less exposed positions, are made chiefly of the remains of bricks which have been already used, ground and sifted afresh. The following are the mixtures employed:—

First class: 16 parts of quartz to 1 plastic clay, or 14 parts of quartz to 1 of leaner clay. Second class: 16 parts of ground bricks of the 1st class, to 1 of clay. Third class: 8 parts of ground bricks of the 2nd and 3rd classes, to 1 of clay.

The latter class are made more with a view to obtain mechanical strength than fire-resisting power.

The materials are mixed together dry, and are thoroughly incorporated by kneading with water, and treading under men's feet; about 18 cubic feet are operated upon at one time. Sufficient water must be added to allow the mixture to be worked into a ball between the fingers without crumbling. The second and third class bricks are formed in open moulds, the stuff being beaten down by a metal rammer of about 4½ lbs. weight; the first class, however, are subjected to a pressure of about 3 tons to the square inch during a period of three quarters of an hour, before they are removed from the moulds. The drying takes place in chambers, through which a current of air passes, at the ordinary temperature in summer, but artificially warmed in winter; the bricks are fit for burning in from 4 to 6 days. The kilns are rectangular chambers, each having two step-grate fireplaces in one of the shorter sides, and a flue communicating with a high chimney at the opposite end. The capacity is about 2,300 or 2,500 bricks. As soon as the kiln is filled, the charging aperture is partly closed, and a gentle fire is kept in the grates, the flue damper being shut. After 36 hours, the charging hole is entirely closed, and the draught is urged by opening the damper inch by inch at intervals, until, at the end of 65 or 70 hours, the whole of the charge has attained a strong white heat. The fires are then removed, the damper is shut down, the grates are filled with sand, and any cracks that may have formed in the kiln are carefully luted up. After standing in this way for 24 hours, the charging place is gradually opened, and in from 36 to 48 hours more, the burnt bricks may be removed.

In 1864 we imported 408,484 bricks or clinkers (Dutch), valued at 613*l.*; and 80,985 of other sorts, valued at 123*l.*

In the same year our exports were as follows:—

	Thousand.	£		Thousand.	£
To Russia	3,087	6,955	To British India:		
Norway	791	1,697	Bombay and Scinde	703	2,626
Denmark	540	1,276	Madras	18	68
Schleswig Holstein	134	336	Bengal and Pegu	290	860
Prussia	1,287	2,843	Singapore and Eastern Straits Settlements	18	56
Hamburg	1,690	4,142	Ceylon	37	160
Holland	1,509	4,278	British North America	873	2,034
France	2,104	5,140	British W. India Islands, and British Guiana	5,090	11,506
Spain and the Canaries	857	2,896	Other countries	5,010	13,664
Egypt	465	1238		28,069	73,532
United States:					
N. Atlantic Ports	595	1,717			
S. Atlantic Ports	67	248			
Pacific Ports	138	237			
Chili	1,395	4,572			
Australia	1,371	4,983			

BRICK CLAY. The familiar term for any clay used in the manufacture of bricks. A good clay for this purpose is a silicate of alumina, combined in various proportions with sand. *Brick clay* is used by geologists in contradistinction to *Boulder clay.*

BRICK EARTH. A marly earth, containing much alumina, largely employed in brick-making.

BRICK RED COPPER ORE. See TILE ORE.

Digitized by Google

BRIDGE. See IRON BRIDGE.

BRIMSTONE. (*Soufre*, Fr.; *Schwefel*, Germ.) SULPHUR (*which see*).

Our *Imports* of *Brimstone unrefined* in 1864 were:—from Italy: Sicily, 776,706 cwts., valued at 289,313*l.*; and from other parts, 15,610 cwts., valued at 5,792*l.*; total amount, 792,316 cwts., valued at 295,105*l.* Of *Brimstone refined*, we imported from Italy: Sicily, 3,040 cwts., valued at 1,368*l.*; and from other parts 346 cwts., valued at 181*l.*; total amount, 3,386 cwts., valued at 1,549*l.*

During the same year our *Exports* of brimstone were as follows:—

	Cwts.	Declared real value.
To Portugal, Azores, and Madeira	18,992	£11,289
United States: North Atlantic Ports	1,469	850
British Possessions in South Africa	7,207	4,347
British India: Bombay and Scinde	305	141
Madras	69	46
Bengal and Pegu	1,130	492
Singapore and Eastern Straits Settlements	902	412
Ceylon	144	86
Australia	4,944	3,030
Canada	1,847	961
British Guiana	1,922	871
Other countries	6,992	3,661
	45,923	26,186

BRISTLE. The stiff glossy hair of swine, which grows chiefly on the backs of those animals, both in the wild and the domesticated state. Bristles are used in the manufacture of brushes.

In 1864 our *Imports* of bristles from Russia were 1,958,112 lbs., valued at 252,923*l.*; from Prussia 59,113 lbs., valued at 7,635*l.*; from Hamburg 207,274 lbs., valued at 26,772*l.*; from Belgium 34,880 lbs., valued at 4,505*l.*; from France 51,859 lbs., valued at 6,699*l.*; from other parts 34,897 lbs., valued at 4,507*l.*; total amount, 2,346,135 lbs., valued at 303,041*l.*

In the same year we exported 12,095 lbs., valued at 2,264*l.*

BRITISH GUM. See DEXTRINE.

BRITTLE SILVER-GLANCE. See SILVER ORES.

BRITTLE SILVER ORE. See SILVER ORES.

BRITTLE SULPHURET OF SILVER. See SILVER ORES.

BROAD CLOTH. A fine kind of woollen cloth, which exceeds twenty-nine inches in width. All of less width are known as *narrow cloths*.

BROAD GAUGE. Rails laid wide apart, as on the Great Western Railway and its branches, in contradistinction to the *narrow gauge*, as on all the other railways of the kingdom. The broad gauge rails are 6 feet apart; the narrow gauge rails 4½ feet.

BROAD LEAF. The *Terminalia latifolia*, a tree, native of Jamaica, the wood of which is used for boards, scantlings, shingles, and staves. It is sometimes mistaken for the almond tree, owing to the shape of its fruit. See TERMINALIA.

BROADSIDE. *A seaman's term*—the full length or side of a ship. *A printer's term*—a full printed page of any sized sheet.

BROCADE. A rich stout silk, formerly much worn by ladies of rank. A name commonly given to any variety of stuff upon which raised flowers are embroidered. The name is also given to a cloth of silk and gold manufactured in eastern countries.

BROCATELLE. Linsey-woolsey is so called in France. A silk material which is used for lining carriages.

BROCATELLI MARBLE. An artificial marble made from fragments of natural marbles united by means of an artificial cement.

BROCHANTITE. An ore of copper found in this country at Roughton Gill, in Cumberland. It has also been discovered in Siberia and Nassau. Its composition is sulphuric acid, 17·7; protoxide of copper, 70·3; water, 12·0.

BROCKRAM. A Cumberland miner's term for a *breccia*.

BROMA. A preparation of chocolate.

BROMATES. Compounds of BROMIC ACID with alkalis, alkaline earths, and metals.

BROMIC ACID. A combination of bromine with oxygen, represented by $HBrO^2$ or $H^2O.Br^2.O^4$, forming bromates.

BROMIDES. Compounds of BROMINE with alkalis and metals.

BROMIDE OF SILVER. A salt much used in PHOTOGRAPHY (*which see*). It is formed by adding a soluble bromide to nitrate of silver, when a white precipitate is produced. See Watts' "Dictionary of Chemistry."

BROMIC SILVER. See SILVER ORES.

Digitized by Google

BROMINE. (Br. Atomic weight, 80. Density in liquid state, 2·97. Density of vapour by experiment, 5·39; calculation on supposition of the density of hydrogen being 0·0692, 5·536.) One of the most active of the elements. It was discovered in 1826, by Balard, of Montpellier, in the bittern produced from the water of the Mediterranean. Bromine is a very interesting substance, and its discovery has had great influence on the progress of theoretical and applied chemistry. It is the only element, save mercury, which exists in the fluid state at ordinary temperatures. It is found not only in sea water, but in numerous saline springs. It also exists in combination with silver and chlorine in some Mexican and Chilian minerals.

Preparation 1. From bittern. — Chlorine gas is passed in for some time; this has the effect of combining with the metallic base of the bromide present, the bromine being, in consequence, liberated. When the bittern no longer increases in colour, the operation is suspended or chloride of bromine would be formed, and spoil the operation. The coloured fluid is placed in a large globe, with a neck having a glass stopcock below like a tap funnel, the upper aperture being closed with a stopper. Ether is then added, the stopper replaced, and the whole well agitated. After a short repose, the ether rises to the surface, retaining the bromine in solution. The stopper being removed to permit the entrance of air, the stopcock is opened, and the aqueous fluid is permitted to run out. As soon as the highly coloured etheral solution arrives at the aperture in the stopcock, the latter is shut; a quantity of solution of potash is then poured, by the upper aperture, into the globe, and the stopper is replaced. The whole is now to be agitated, by which means the bromine combines with the potash, forming a mixture of bromate of potash and bromide of potassium. The stopcock is again opened, and the aqueous fluid received into an evaporating vessel, boiled to dryness, and ignited. By this means the bromate of potash is all converted into bromide of potassium. The bromine may be procured from the bromide of potassium by distillation with peroxide of manganese and sulphuric acid. In this operation one equivalent of bromide, two equivalents of sulphuric acid, and one of peroxide of manganese, yield one equivalent of sulphate of manganese, one of sulphate of potash, and one of bromine; or, in symbols, $KBr + 2SO^3 + Mn\,O^2 = KO,SO^3 + MnO,SO^3 + Br$. The reaction, in fact, takes place in two stages, but the ultimate result is as represented in the equation.

Preparation 2. — In some saline springs where bromine is present, accompanied by considerable quantities of salts of lime, &c., the brine may be evaporated to one-fourth, and, after repose, decanted or strained from the deposit. The mother liquid is to have sulphuric acid added in order to precipitate most of the lime. The filtered fluid is then evaporated to dryness, redissolved in water, and filtered; by this means more sulphate of lime is got rid of. The fluid is then distilled with peroxide of manganese and hydrochloric acid.

The only well developed oxide of bromine is bromic acid, BrO^5. Solutions of bromine in water may have their strength determined, even in presence of hydrochloric or hydrobromic acids, by means of a solution of turpentine in alcohol. One quarter of an equivalent of turpentine (34 parts) decolorises 80 parts or 1 equivalent of bromine. — C. G. W.

Bromacetic Acid. — Obtained by Messrs. Perkin and Duppa. They take a mixture of crystallisable acetic acid and bromine in the proportion of equal equivalents, introduce it into a sealed tube, which is placed in an oil bath and heated to 150° C. The mixture, which is nearly colourless, or of a light amber colour, is transferred to a retort, and the excess of acetic acid driven off by heating to 200° C. On cooling, a beautiful white crystalline solid is obtained, which is bromacetic acid together with hydrobromic acid and bibromacetic acid. The mixed acids are heated to 130° C., carbonic acid passed until the reaction of hydrobromic acid, with nitrate of silver, is no longer evident. Carbonate of lead is then added, the whole heated to 100° C., and allowed to stand for some hours; the liquid filtered off from the crystalline deposit.

The acid thus obtained crystallises in rhombohedra, is exceedingly deliquescent, and very soluble in water or alcohol. It fuses below 100° C., and boils at 208° C. When distilled with acetate of potassium, it gives off acetic acid; when heated with metallic zinc, it yields acetate and bromide of zinc.

It attacks the epidermis powerfully, raising a blister like that produced by a burn. It forms crystallisable salts with most bases, many of which decompose rapidly.

Messrs. Perkin and Duppa have formed the salts of the alkalis and alkaline earths. The lead salt is obtained by neutralising bromacetic acid with oxide of lead, and recrystallising in water, washing the crystalline precipitate with cold water, and recrystallising from water. It has the formula $C^4H^2BrPbO^4$.

The silver salt is obtained by treating bromacetic acid with carbonate of silver, or by adding solution of bromacetic acid to solution of nitrate of silver. It is thrown down as a crystalline precipitate, having the formula $C^4H^2BrAgO^4$.

Digitized by Google

Bromacetate of methyl is a colourless mobile liquid, having an aromatic odour; it boils at 144° C. The bromacetate of ethyl boils at 159° C.; that of amyl at 207° C.

By the action of ammonia on bromacetic acid, bromide of ammonium is formed, and glycocol, or a body isomeric with it, according to the equation

$$C^4H^3BrO^4 + 2NH^3 = \underbrace{C^4NH^5O^4}_{\text{Glycocol.}} + NH^4Br$$

—H. M. W.

BIBROMACETIC ACID.—Formed when bromine and acetic acid are heated in presence of light, but it is difficult to obtain in large quantities. It is a liquid boiling at 240° C., which is partially decomposed every time it is distilled, evolving hydrobromic acid. It does not solidify at 15° C. It has a very high specific gravity. The silver salt is a crystalline precipitate which is, however, decomposed, by boiling with water, into bromide of silver and a soluble acid. It has the formula $C^4HBr^2AgO^4$.

Bibromacetate of ethyl is obtained by heating hydrate of ethyl with bibromacetic acid in a sealed tube at a temperature of 100° C., washing with water and drying over chloride of calcium. It is a colourless liquid, heavier than water, acting on the eyes and nose like the bromacetate.—See Watts' "Dictionary of Chemistry."

BRONZE. (*Bronze*, Fr.; *Bronze*, Ger.) A compound metal consisting of copper and tin, to which sometimes a little zinc and lead are added. There is some confusion amongst continental writers about this alloy; they translate their bronze into the English *brass*.

See, for an example of this, "Dictionnaire des Arts et Manufactures." This has arisen from the carelessness of our own writers. Dr. Watson, "Chemical Essays," remarks: "It has been said that Queen Elizabeth left more *brass ordnance* at her death than she found iron on her accession to the throne. This must not be understood as if gun metal was made in her time of brass, for the term brass was sometimes used to denote copper; and sometimes a composition of iron, copper, and calamine was called brass; and we, at this day, commonly speak of *brass cannon*, though brass does not enter into the composition used for casting cannon."

Bronze is an alloy of copper and tin.

Brass is an alloy of copper and zinc.

In many instances, we have zinc, lead, &c., entering into the composition of alloys of copper and tin. However this may be, the alloy is called a bronze, if tin and copper are the chief constituents.

This alloy is much harder than copper, and was employed by the ancients to make swords, hatchets, &c., before the method of working iron was generally understood. The art of casting bronze statues may be traced to the most remote antiquity, but it was first brought to a certain degree of refinement by Theodoros and Rœcus of Samos, about 700 years before the Christian era, to whom the invention of modelling is ascribed by Pliny. The ancients were well aware that by alloying copper with tin, a more fusible metal was obtained, that the process of casting was therefore rendered easier, and that the statue was harder and more durable. It was during the reign of Alexander that bronze statuary received its greatest extension, when the celebrated artist Lysippus succeeded, by new processes of moulding and melting, in multiplying groups of statues to such a degree that Pliny called them the *mob of Alexander*. Soon afterwards enormous bronze colossuses were made, to the height of towers, of which the isle of Rhodes possessed no less than one hundred. The Roman consul Mutianus found 3000 bronze statues at Athens, 3000 at Rhodes, as many at Olympia and at Delphi, although a great number had been previously carried off from the last town.

From the analyses of Mr. J. A. Phillips, we learn that most of the ancient coins were bronzes, the quantity of tin relatively to the copper varying slightly. The proportions of copper and tin in many of those coins are given below, the other ingredients being omitted:—

	Copper.	Tin.
A coin of Alexander the Great, 335 B.C.	86·72	13·14
„ Philippus V. - 200 B.C.	85·15	11·10
„ Athens	88·41	9·95
„ Ptolemy IX. - 70 B.C.	84·21	15·59
„ Pompey - 53 B.C.	74·11	8·56
„ the Atilia family - 45 B.C.	68·72	4·77
„ Augustus and Agrippa, 30 B.C.	78·58	12·91

The arms and cutting instruments of the ancients were composed of similar

Digitized by Google

bronzes, as the following proportions, also selected from Mr. J. A. Phillips's analyses, will show:—

	Copper.	Tin.
Roman sword blade, found in the Thames	85·70	10·02
,, ,, ,, Ireland	91·39	8·38
Celtic ,, ,, Ireland	90·23	7·50

Layard brought from Assyria a considerable variety of bronze articles, many of them objects of ornament, but many evidently intended for use. Amongst others was a bronze foot, which was constructed for the purpose of support of some kind. This was submitted to the examination of Dr. Percy. It was then found that the bronze had been cast round a support of iron. By this means the appearance of considerable lightness was attained, while great strength was insured. This discovery proves in a very satisfactory manner, that the metallurgists of Assyria were perfectly conversant with the use of iron, and that they employed it for the purpose of imparting strength to the less tenacious metals which they employed in their art manufactures. This bronze, as analysed in the Metallurgical Laboratory of the Museum of Practical Geology, consists of copper 88·37, tin 11·33.

Examination has shown that all the bronze weapons of the Greeks and Romans were not only of the true composition for ensuring the greatest density in the alloy itself, but that these, by a process of hammering the cutting edges, were brought up to the greatest degree of hardness and tenacity.

Before 1542 "brass ordnance" (*bronze*) was founded by foreigners. Stow says that John Owen began to found brass ordnance, and that he was the first Englishman who ever made that kind of artillery in England.

Bell founding followed. Bell-metal and other broken metal were allowed to be exported hitherto; but it being discovered that it was applied to found guns abroad, "brass, copper, latten, bell metal, pan metal, gun metal, and shroff metal, are prohibited to be exported."

Bronze has almost always been used for casting statues, basso relievos, and works which were to be exposed to atmospheric influences. In forming such statues, the alloy should be capable of flowing readily into all the parts of the mould, however minute; it should be hard, in order to resist accidental blows, be proof against the influence of the weather, and be of such a nature as to acquire that greenish oxidised coat upon the surface, which is so much admired in the antique bronzes, called *patina antiqua*. The chemical composition of the bronze alloy is a matter therefore of the first moment. The brothers Keller, celebrated founders in the time of Louis XIV., whose *chefs-d'œuvre* are well known, directed their attention towards this point, to which too little importance is attached at the present day. The statue of Desaix, in the Place Dauphine, and the column in the Place Vendôme are noted specimens of most defective workmanship from mismanagement of the alloys of which they are composed. On analysing separately specimens taken from the bas-reliefs of the pedestal of this column, from the shaft, and from the capital, it was found that the first contained only 6 per cent. of tin, and 94 of copper, the second much less, and the third only 0·21. It was therefore obvious that the founder, unskilful in the melting of bronze, had gone on progressively refining his alloy, by the oxidisement of the tin, till he had exhausted the copper, and that he had then worked up the refuse scoriæ in the upper part of the column. The cannon which the Government furnished him for casting the monument consisted of:—

Copper	89·360
Tin	10·040
Lead	0·102
Silver, zinc, iron, and loss	0·498
	100·000

The moulding of the several bas-reliefs was so ill executed, that the chiselers employed to repair the faults removed no less than 70 tons of bronze, which was given them, besides 300,000 francs for their work. The statues made by the Kellers at Versailles were found, on chemical analysis, to consist of:—

	No. 1.	No. 2.	No. 3.	The mean.
Copper	91·30	91·68	91·22	91·40
Tin	1·00	2·32	1·78	1·70
Zinc	6·09	4·93	5·57	5·53
Lead	1·61	1·07	1·43	1·37
	100·00	100·00	100·00	100·00

Digitized by Google

The analysis of the bronze of the statue of Louis XV. was as follows :—

Copper - - -	82·45	Its specific gravity was 8·482
Zinc - - - -	10·30	
Tin - - - -	4·10	
Lead - - - -	3·15	
	100·00	

The bronzes of France, according to M. L. E. Rivot, contain nearly always four metals, copper, tin, lead, and zinc. They may contain also very small and variable quantities of iron, nickel, arsenic, antimony, and sulphur.

The alloys most proper for bronze to be afterwards struck for medals is composed of from 8 to 12 parts of tin and from 88 to 92 of copper; to which if 2 or 3 parts in the hundred of zinc be added, they will make it assume a finer bronze tint. The alloy of the Kellers is famous for this effect. The medal should be subjected to three or four successive stamps of the press, and be softened between each blow by being heated and plunged into cold water.

The bronze of bells, or bell metal, is composed, in 100 parts, of copper 78, tin 22. This alloy has a fine compact grain, is very fusible and sonorous. The other metals sometimes added are rather prejudicial, and merely increase the profit of the founders. Some of the English bells consist of 80 copper, 10·1 tin, 5·6 zinc, 4·3 lead; the latter metal, when in such large quantities, is apt to cause isolated drops, hurtful to the uniformity of the alloy.

The *Tam-tams and Cymbals of Bronze.*—The Chinese make use of bronze instruments forged by the hammer, which are very thin and raised up in the middle; they are called gongs, from the word *tshoung*, which signifies a bell. Klaproth has shown that they contain nothing but copper and tin, in the proportion of 78 of the former metal and 22 of the latter. Their specific gravity is 8·815. This alloy, when newly cast, is as brittle as glass; but by being plunged at a cherry-red heat into cold water, and confined between two discs of iron to keep it in shape, it becomes tough and malleable. The cymbals consist of 80 parts copper and 20 tin.

Bronze vessels, naturally brittle, may be made tenacious by the same ingenious process, for which the world is indebted to M. Darcet. Bronze mortars for pounding have their lips tempered in the same way.

Cannon Metal consists of about 90 or 91 copper, and 10 or 9 of tin. From the experiments of Papacino d'Antony, made at Turin, in 1770, it appears that the most proper alloy for great guns is from 12 to 14 parts of tin to 100 of copper; but the Comte Lamartilliere concluded, from his experiments made at Douay, in 1786, that never less than 8 nor more than 11 of tin should be employed in 100 parts of bronze.

Gilt Ornaments of Bronze.—This kind of bronze should be easy of fusion, and take perfectly the impression of the mould. The alloy of copper and zinc (brass) is, when fused, of a pasty consistence, does not make a sharp cast, is apt to absorb too much amalgam, is liable to crack in cooling, and is too tough or too soft for the chaser or turner; and if the quantity of zinc was increased, to make the metal harder, it would lose the yellow colour suitable to the gilder. A fourfold combination of copper, zinc, tin, and lead is preferable for making such ornamental bronze articles; and the following proportions are probably the best, as they unite closeness of grain with the other good qualities. Copper 82, zinc 18, tin 3 or 1, lead 1½ or 3. In the alloy which contains most lead, the tenacity is diminished and the density is increased, which is preferable for pieces of small dimensions. Another alloy, which is said to require for its gilding only two thirds of the ordinary quantity of gold, has the following composition: copper 82·247, zinc 17·481, tin 0·238, lead 0·024. See ALUMINUM BRONZE.

The antique bronze colour is given to figures and other objects made from these alloys by the following process:—Two drachms of sal-ammoniac, and half a drachm of salt of sorrel, (binoxalate of potash,) are to be dissolved in fourteen ounce measures (English) of colourless vinegar. A hair pencil being dipped into this solution, and pressed gently between the fingers, is to be rubbed equally over the clean surface of the object slightly warmed in the sun or at a stove; and the operation is to be repeated till the wished-for shade is obtained.

The bronze founder ought to melt his metals rapidly, in order to prevent the loss of tin, zinc, and lead by their oxidisement. Reverberatory furnaces have been long used for this operation, the best being of an elliptical form. The furnaces with dome tops are employed by the bell founders, because, their alloy being more fusible, they do not require so intense a heat; but they also would find their advantage in using the most rapid mode of fusion. The surface of the melting metals should be covered with small charcoal or coke; and when the tin is added, it should be dexterously

Digitized by Google

thrust to the bottom of the melted copper. Immediately after stirring the melted mass so as to incorporate its ingredients, it should be poured out into the moulds. In general, the metals most easily altered by the fire, as the tin, should be put in last. The cooling should be as quick as possible in the moulds, to prevent the risk of the metals separating from each other in the order of their density, as they are very apt to do. The addition of a little iron — in the form of tin plate — to bronze, is reckoned to be advantageous.

One part of tin, and two parts of copper (nearly one atom of tin and four of copper, or more exactly 100 parts of tin and 215 copper), form the ordinary speculum metal of reflecting telescopes, which is of all the alloys the whitest, the most brilliant, the hardest, and the most brittle. The alloy of 1 part of tin and 10 of copper (or nearly one atom of the former to eighteen of the latter), is the strongest of the whole series.

Ornamental objects of bronze, after being cast, are commonly laid upon red-hot coals till they take a dull red heat, and are then exposed for some time to the air. The surface is thereby freed from any greasy matter, some portion of the zinc is dissipated, and the alloy assumes more of a coppery hue, which prepares for the subsequent gilding. The black tinge which it sometimes gets from the fire may be removed by washing it with a weak acid. It may be made very clean by acting upon it with nitric acid, of specific gravity 1·324, to which a little common salt and soot have been added, the latter being of doubtful utility; after which it must be well washed in water, and dried with rags or sawdust.

For the following Table we are indebted to Mr. Robert Mallet, C. E., whose investigations in this direction have been most extensive, and as accurate as they are extensive: —

	Chemical Constitution.	Composition by Weight per Cent.	Atomic Weight.	Specific Gravity.	Fracture.*	Colour of Fracture.	Ultimate Cohesion per Square Inch.	Inverse Order of Ductility.	Order of Malleability at 60° F.	Inverse Order of Hardness.	Inverse Order of Fusibility.	Commercial Titles, characteristic Properties in working, &c.
1	Cu+Sn	100·00+ 0	31·6	8·667	E	Tile red - -	24·6	1	2	10	16	Copper.
2	10 Cu+Sn	84·29+ 15·71	374·9	8·561	FC	Reddish yellow, 1	16·1	2	6	8	15	Gun metal, &c.
3	9 Cu+Sn	82·81+ 17·19	343·3	8·462	FC	Reddish yellow, 2	15·2	3	7	5	14	Ditto.
4	8 Cu+Sn	81·10+ 18·90	311·7	8·459	FC	Yellowish red, 2	17·7	4	10	4	13	Gun metal, tempers best
5	7 Cu+Sn	78·97+ 21·03	280·1	8·728	VC	Yellowish red, 1	13·6	5	11	3	12	Hard mill brasses, &c.
6	6 Cu+Sn	76·29+ 23·71	248·5	8·750	V	Bluish red, 1 -	9·7	0	12	2	11	Brittle †
7	5 Cu+Sn	72·80+ 27·20	216·9	8·575	C	Bluish red, 2 -	4·9	0	13	1	10	Brittle.†
8	4 Cu+Sn	68·21+ 31 79	185·3	8·400	C	Ash grey - -	0·7	0	14	6	9	Crumbles.†
9	3 Cu+Sn	61·69+ 38·31	153·7	8·539	TC	Dark grey - -	0·5	0	16	7	8	Crumbles.†
10	2 Cu+Sn	51·75+ 48·25	122·1	8·416	VC	Greyish white, 1	1·7	0	15	9	7	Brittle.†
11	Cu+Sn	34·92+ 65·08	90·5	8·056	TC	Whiter still, 2 -	1·4	0	9	1	6	Small bells, brittle.†
12	Cu+2 Sn	21·15+ 78·85	149·4	7·387	CC	Ditto 3 -	3·9	0	8	1	5	Ditto brittle.†
												Speculum: —
13	Cu+3 Sn	15·17+ 84·83	208·3	7·447	CC	Ditto 4 -	3·1	0	5	1	4	Metal of authors.
14	Cu+4 Sn	11·82+ 88·18	267·2	7·472	CC	Ditto 5 -	3·1	3	4	14	3	Files, tough.
15	Cu+5 Sn	9·68+ 90·32	326·1	7·442	E	Ditto 6 -	2·7	6	3	15	2	Files, soft and tough.
16	+Sn	0·00+100·00	58·9	7·291	F	White, 7 - -	2·5	7	1	16	1	Tin.

In 1864 we *imported*, of Bronze manufactures, or of metal bronzed or lacquered:

	Cwts.	Declared real value.
From France - - - - - - - -	4,576	£72,033
Other parts - - - - - - - -	509	6,617
	5,085	78,650

See KINGSTON'S METAL.

BRONZING. The process for giving to metals, plaster, wood, or any other body, a bronze-like surface. Various processes have been adopted for producing this effect. When brass castings are to be bronzed, it is essential, in the first place, that they should be thoroughly cleansed from grease, and brightened either with the file or emery-paper, or by boiling in a strong ley and then scouring with fine sand and water. Vinegar alone is sometimes employed to produce the green bronze colour; sometimes dilute nitric acid, and often the muriate of ammonia (*sal ammoniac*). This latter salt and vinegar are frequently combined, and often a little common table salt is added to the bronzing fluid.

* E signifies earthy; C C, coarse crystalline; F C, fine crystalline; C, concholdal; V, vitreous; V C, vitreous-concholdal; T C, tabular crystalline.

† All these alloys are found occasionally in bells and specula with mixtures of Zn and Pb.

Digitized by Google

Coins and medals may be bronzed with the following solution: — 2 parts of verdigris and 1 part of sal ammoniac are to be dissolved in vinegar; the solution is to be boiled, skimmed, and diluted with water till it has only a weak metallic taste, and upon further dilution lets fall no precipitate. This solution is made to boil briskly, and is poured upon the objects to be bronzed. These are well washed with clean water, and then lacquered.

To give fresh-made bronze objects an antique appearance, three quarters of an ounce of sal ammoniac, and a drachm and a half of binoxalate of potash (salt of sorrel) are to be dissolved in a quart of vinegar, and a soft rag or brush moistened with this solution is to be rubbed over the clean bright metal till its surface becomes entirely dry by the friction. This process must be repeated several times to produce the full effect; and the object should be kept a little warm. Copper acquires very readily a brown colour by rubbing it with a solution of the common liver of sulphur, or sulphuret of potassium.

The Chinese are said to bronze their copper vessels by taking 2 ounces of verdigris, 2 ounces of cinnabar, 5 ounces of sal ammoniac, and 5 ounces of alum, all in powder, making them into a paste with vinegar, and spreading this pretty thick like a pigment on the surfaces previously brightened. The piece is then to be held a little while over a fire, till it becomes uniformly heated. It is next cooled, washed, and dried; after which it is treated in the same way once and again till the wished-for colour is obtained. An addition of sulphate of copper makes the colour incline more to chesnut brown, and of borax more to yellow. It is obvious that the cinnabar produces a thin coat of sulphuret of copper upon the surface of the vessel, and might probably be used with advantage by itself.

To give the appearance of antique bronze to modern articles, we should dissolve 1 part of sal ammoniac, 3 parts of cream of tartar, and 6 parts of common salt in 12 parts of hot water, and mix with the solution 8 parts of a solution of nitrate of copper of specific gravity 1·160. This compound, when applied repeatedly in a moderately damp place to bronze, gives it in a short time a durable green coat, which becomes by degrees very beautiful. More salt gives it a yellowish tinge, less salt a bluish cast. A large addition of sal ammoniac accelerates the operation of the mordant.

The best and most rapid bronzing liquid, which may be applied to copper, brass, iron, or to new bronze, with equal advantage, is a solution of the chloride of platinum (*nitro-muriate of platinum*) called chemical bronze; but it is expensive. With the chloride of platinum, almost any colour can be produced, according to the degree of dilution and the number of applications.

Some beautiful effects are produced upon bronze, and also upon iron castings, by treating them with dilute acids. The action here is scarcely to be described as bronzing; it is, in fact, merely developing the true colour of the metal or alloy.

With the view of rendering the action of the bronzing liquid as uniform as possible, small articles are dipped; for larger articles, the bronzing liquid is *dabbed* on plentifully with a linen rag. The dabbing process is to prevent the occurrence of streaks, which might arise if the liquid was applied in straight strokes. When properly bronzed and washed, the work is usually black-leaded, to give it a polished appearance.

Bronzing of Objects in Imitation of Metallic Bronze. — Plaster of Paris, paper, wood, and pasteboard, may be made to resemble pretty closely the appearance of articles of real bronze, modern or antique. The simplest way of giving a brilliant aspect of this kind is with a varnish made of the waste gold leaf of the beater, ground up on a porphyry slab with honey or gum-water. A coat of drying linseed-oil should be first applied, and then the metallic powder is put on with a linen dossil. Mosaic gold ground up with six parts of bone-ashes has been used in the same way. When it is to be put on paper, it should be ground up alone with white of eggs or spirit varnish, applied with a brush, and burnished when dry. When a plate of iron is plunged into a hot solution of sulphate of copper, it throws down fine scales of copper, which being repeatedly washed with water, and ground along with six times its weight of bone-ashes, forms a tolerable bronzing.

Powdered and sifted tin may be mixed with a clear solution of isinglass, applied with a brush, and burnished or not, according as a bright or dead surface is desired. Gypsum casts are commonly bronzed by rubbing brilliant black-lead, *graphite*, upon them with a cloth or brush.

Browning of Gun-Barrels and other Arms. — By this process the surface of several articles of iron acquires a shining brown colour. This preparation, which protects the iron from rust, and also improves its appearance, is chiefly employed for the barrels of fowling-pieces and soldiers' rifles, to conceal the fire-arms from the game and the enemy. The finest kind of browning is the Damascus, in which dark and bright lines run through the brown ground.

Digitized by Google

This operation consists in producing a very thin uniform film of oxide or rust upon the iron, and giving a gloss to its surface by rubbing wax over it, or coating it with a shell-lac varnish.

Several means may be employed to produce this rust speedily and well. The effect may be obtained by inclosing the barrels in a space filled with the vapour of muriatic acid. Moistening their surface with diluted muriatic or nitric acid will answer the same purpose. But the most common material used for browning is the butter or chloride of antimony, which, on account of its being subservient to this purpose, has been called *bronzing salt*. It is mixed uniformly with olive oil, and rubbed upon the iron slightly heated, which is afterwards exposed to the air, till the wished-for degree of browning is produced. A little aquafortis is rubbed on after the antimony, to quicken its operation. The brown barrel must be then carefully cleaned, washed with water, dried, and finally polished, either by the steel burnisher, or rubbed with white wax, or varnished with a solution of 2 ounces of shell-lac and 3 drachms of dragon's blood, in 2 quarts of spirits of wine.

The following process may also be recommended:—Make a solution with half an ounce of aquafortis, half an ounce of sweet spirit of nitre, 1 ounce of spirit of wine, 2 ounces of sulphate of copper, and 1 ounce of tincture of iron, in so much water as will fill altogether a quart measure. The gun barrel to be browned must first of all be filed and polished bright, and then rubbed with unslaked lime and water to clear away all the grease. Its two ends must now be stopped with wooden rods, which may serve as handles, and the touch-hole must be filled with wax. The barrel is then to be rubbed with the solution, applied to linen rags or a sponge, till the whole surface be equally moistened; it is allowed to stand 24 hours, and is then scrubbed off with a stiff brush. The application of the liquid and the brushing may be repeated twice or oftener, till the iron acquires a brown colour. After the last brushing, the barrel must be washed with plenty of boiling water containing a little potash, then washed with clean water, dried, rubbed with polishing woods, and then coated with shell-lac varnish.

BRONZE PAINT. Bronze paint, commonly called gold paint, is made by mixing gold-coloured bronze powder with pure turpentine as a vehicle. The turpentine of commerce has at all times an acid reaction which is detrimental to the colour of the metal powder. The turpentine used for this purpose has, therefore, to be mixed with lime to neutralise the acid before it is thus employed.

BRONZE POWDERS have been much used of late in the decorative painting of houses, &c. They are prepared of every shade, from that of bright gold to orange, dark copper, emerald green, &c. Pale gold is produced from an alloy of 13¼ of copper and 2¾ of zinc; crimson metallic lustre—from copper: ditto, paler, copper and a very little zinc; green bronze with a proportion of verdigris; another fine orange by 14·4 copper and 1¾ zinc; another ditto, 13¾ copper and 2·4 zinc: a beautiful pale gold from an alloy of the two metals in atomic proportions.

The alloy is laminated into very fine leaves with careful annealing, and these are levigated into impalpable powders along with a film of fine oil to prevent oxidisement, and to favour the levigation.

Mr. Brandeis, in his account of his articles of manufacture furnished to the New York Exhibition, says:—

"Bronzes, or, more correctly, metallic powders resembling *gold dust*, were invented in 1648, by a monk, at Furth, in Bavaria, named Theophrastus Allis Bombergensis. He took the scraps or cuttings of the metallic leaves then known as 'Dutch leaf,' and ground them with honey. This roughly made bronze powder was used for ornamenting parchments, capital letters in bibles, choral books, &c."

At Furth bronze powders are largely made for Europe, and with little change or improvement. There are four sorts of Dutch leaf.

Common leaf, soft, and of reddish cast, composed of 25 or 30 per cent. of zinc to 75 or 70 per cent. of copper.

French leaf contains more zinc, is harder, less ductile, and has a purer yellow colour.

Florence leaf has a larger proportion of zinc, and is of a greenish gold colour; and lastly,

White leaf, composed of tin. The more zinc these alloys contain, the harder, the more brittle, and more difficult are they to work into perfect leaves. The manner of beating is similar to the mode for producing gold leaves.

The scraps, cuttings, and fragments of these leaves are the materials for the German bronze powders. First brushed through a seive and ground with gum water on marble slabs for six hours, the gum washed out, the powders sorted, dried, and a coating of grease given to make them appear more brilliant, and to protect them from oxidation. Varieties of colour, such as orange, &c., are produced by a film of sub-oxide upon the surface of the particles. The price of bronze powders depends upon the demand, and the supply of the waste material of the metal leaves, and prices change accordingly.

Digitized by Google

Messrs. Brandeis patent their process, and in place of being dependent upon uncertain supplies of metal and unknown composition, they take the metals at once in a state of purity (say copper by voltaic precipitation): it is alloyed with zinc, cast into ingots, rolled into ribands, cut, annealed, and rolled until the metal is thin and leaf-like; then it is taken to a steam mill, and ground. The bronze powder is washed out and dried, then introduced into an air-tight room, with an arrangement of boxes; the air of the chamber is set in violent motion by bellows, and thepowder diffused throughout; the bronze powders are deposited, the finest in the upper boxes, and the coarser powders below. When settled, *mineral* varnish is introduced; the boxes fitted with tight lids are made to revolve, and the particles are thus rapidly coated and the highest metallic brilliancy imparted. Different shades of colour, pink, crimson, &c, are produced by submitting the powder to heat and oxidation before the rapid revolutions of the varnishing boxes.

The quantity thus produced by one firm, with three steam-engines at work, enables the finished bronze powders to be produced at a rate about equal to the price the German manufacturer has to pay for his materials—the cuttings and scraps of leaves. Hence, for the purposes of trade and art, a large exportation of bronze powders takes place from America to Europe, South America, and China.

The bronze powders are largely used in japanning, bronzing tin and iron goods, ornamental works of paper, wood, oil-cloth, leather, &c.; while sign-boards and the decoration of public buildings have effective metallic brilliant surfaces of beauty and durability. In fact, for ornamental decorations, the demand steadily increases.

In Holland and Germany the subject has been examined, with the view of ascertaining the effect of chemical composition.

De Heer E. R. Konig has lately given a Table of the analyses of the best European samples of bronze powders and leaves (*Volksflight*):—

	Copper.	Zinc.	Iron.	Tin.
	Per Cent.	Per Cent.	Per Cent.	Per Cent.
1. Light yellow	82·38	16·69	0·16	0
2. Gold yellow	84·50	15·30	0·07	0
3. Messing yellow, or brass copper red-yellow colour	90·	9 61	0·20	0
4. Copper bronze orange	98·93	0·73	0·08	0
5. Copper red, high shade of purple colour	99·90	0·00	trace.	0
6. Purple violet	98·22	0.5	0·30	trace.
7. Light green	84·32	15·02	0·05	trace.
8. Tin white or leaden grey	0·00	2·39	0·56	97·46

Our *Importations* in 1864 of BRONZE POWDERS were valued at 5,637*l.*, according to the Custom House computation.

BROOM. The *Planta genista*, used medicinally.

BROOM DYERS, or GREENWEED. The *Genista tinctoria*, a dwarf shrub from the flowers of which a bright yellow colour is obtained, which for dyeing green with woad is said to be preferred by dyers to all other yellows. See WOAD.

BROOMS. Sweeping brushes. These are made of cocoa-nut fibre, of date-palm leaves, of broom-corn, and in this country of birch twigs, sedge, the common heath, and of the broom.

BROOM CORN. *Sorghum dura.* Cultivated in America to make brooms, the grains being used as food for poultry. A species of this grass, the *Holcus saccharatus*, a native of China, abounds in sugar. This grass is generally known by the name of *Sorgho.* It has been used from time immemorial by the inhabitants of China, who extract sugar from it. The Toulon Agricultural Association recommend its introduction into France, to take the place of beet-root. They state that it is richer in sugar than any known plant, except the vine. Beet-root contains from 8 to 10 per cent. of sugar. The sorgho from 16 to 20 per cent., from which about 8 per cent. of pure alcohol can be obtained. The refuse is said to be excellent food for cattle. The plant grows rapidly, and does not require irrigation.

BRORA COAL. An inferior coal lying in the Oolitic deposits of Brora, in Scotland, and near Scarborough in Yorkshire. See COAL.

BROUSONETTIA TINCTORIA. A variety of the mulberry (*Morus* or *Maclura*), with yellow wood, and producing the Fustic of commerce. See FUSTIC.

BROWN BERRIES. A name occasionally given to the fruit of the *Rubus fructicosus*, or common bramble.

BROWN COAL is of a brownish-black colour, and presents, in some cases, the texture of wood, when it is called LIGNITE; but, in some varieties, all organic struc-

Digitized by Google

ture has disappeared, and it is then called pitch coal, from its strong resemblance to true coal.

The beds of brown coal are generally of small extent, and are of later date than the true carboniferous strata, belonging to the Tertiary period.

Brown coal is worked in Saxony and in countries where there is an absence of true carboniferous deposits. It burns with an empyreumatic odour, and generally contains more pyrites than ordinary coal.

At Steieregg, in Southern Styria, brown coal occurs in the form of a basin; and has been opened out through a distance of more than two miles. The coal, from 8 to 16 feet thick, is of good quality. It contains 9 to 14 per cent. of water, and leaves from 5 to 12 per cent. of ash after combustion.

The following is an analysis of a variety from Oregon: volatile matter 49·5; fixed carbon 42·9; ash 2·7; water 4·9 = 100·00.

A variety of brown coal, called the paper-coal of Rott, near Bonn, and of Erpel on the Rhine, contains numerous remains of freshwater fishes, *Leuciscus papyraceus*; and of frogs, *Palæophrygnos grandipes*. The ashes of this coal are also rich in infusorial remains.

For an account of the brown coals of this country, see LIGNITE and BOGHEAD COAL.

The following is a general summary of the present state of the brown coal mines of Europe.

HANOVER.—Government mines near Münden, on the Steinberg, and near Wallensen, in the Wanzerbruche; and private mines near Dransfeld, produced in

	Centners of 100 lbs.	Value of produce in Thalers=2s. 10½d.
1861	99,177	8,959
1862	108,314	7,526
1863	92,658	6,186

NASSAU produces *Bignit*, a bituminous wood, preserving the ligneous structure, *Pseudolignit*, in which the woody structure is more or less obliterated. *Meerkohl* (literally *sea coal*), a miry earthy coal resembling turf. *Blätterkohl* (literally *leaf coal*), a dark-coloured aggregate of decomposed leaves. The total produce in 1864, amounted to 1,032,000 centners (of 50 kilogrammes of 2,204 avoirdupois pounds).

ITALY.—*Leffe Gandino, in the Val Sterina in Lombardy.* This bed extends over 500 hectares. The lignite produced is of a kind resembling peat. It is sold at 15 francs per ton. Cadibona, near Savona, in the Gulf of Genoa, produces about 1,000 tons annually. From *Sarzanella, near Spezia*, 25,240 to 31,300 tons of lignite are extracted yearly. At *Monte Bamboli, between Grosseto and Piombino*, the production, which may amount to 30 tons daily, does not exceed 10,000 tons in the year, as owing to the unhealthiness of the climate the works cannot be carried on more than seven or eight months. At the *Monte Rufoli* or *Podemnovo* mine, the field of lignite extends over 2,000,000 square mètres. At *Monte Massi* and *Castel Tatti* mines, in the year ending June 30, 1865, the amount of lignite produced was about 6,000 tons.

PRUSSIA.—The annual production of bovey coal from the beds in the vicinity of Stettin, does not exceed 7,000 tons. The total production of brown coal in the Rhenish provinces was in—

	Prussian tons.		Prussian tons.
1857	18,244,423	1861	22,137,159
1858	19,389,014	1862	24,545,975
1859	20,349,641	1863	26,686,963
1860	21,021,961		

Produce of Prussian collieries in 1861:—

	Tons.	Value at the pit.
Breslau	132,917	£18,016
Halle	2,933,783	418,815
Dortmund	1,193	114
Bonn	200,216	18,904
Total	2,268,108	455,849

Brandenburg.—According to the best information, there were sent to Berlin 462,298 tonnen of Bohemian and Saxon Brahnkohle. *Kottbus.* The quantity taken from the pits Felix and Conrad, at Borsdorf, Julius at Friedrichshain, and Franz at Klein Kölzig, was about 400,000 tonnen. *Silesia Breslau.* One pit in the neighbourhood of Saaran produced 21,000 tonnen of the value of 2,000 thalers. *Halle.* There were produced in the district of Merseburg, from the 3 government and 192 private works, to the amount of 12,255,365 tonnen; in the government district of Magdeburg, 7,794,563 tonnen; in the total district of the Bergamt of Halle, 24,149,214 tonnen.

Digitized by Google

Rhine, Essen. There were produced at the pit Nachtigall, near Höxter, 10,873 tonnen of brown coal, value 881 thalers. LIGNITE: the produce of this kind of fuel in the Zollverein amounted in 1861 to 4,622,312 tonnen, of the value of 16,631,122 francs. Prussia alone produced 4,427,442 tonnen, of the value of 11,396,239 francs. The total produce in the Prussian States will be seen in the following table:—

	1862 Metrical tonnen.	1861 Metrical tonnen.
Stassfurt Schönebeck - - -	746,529	612,300
Weissenfels - - - - -	368,455	334,800
Halle-Eisdorf - - - -	325,642	284,300
Bitterfeld - - - - -	247,340	178,780
Oschersleben - - - - -	160,856	176,400
Brühl-Euskirchen - - - -	137,486	123,950
Aschersleben - - - -	122,154	115,600
Frankfort-on-Oder - - -	118,117	89,700
Merseburg-Durrenburg - - -	105,817	85,480
Forty-eight smaller districts - -	1,482,733	1,193,330
Total - - - - - -	3,815,129	3,194,640

This shows an increase of 620,489 tonnen. Throughout the entire Zollverein, in the year 1863, the brown coal produced at 843 collieries yielded 109,189,899 cwts., valued at 5,061,241 thalers.

SAXONY.—Here much of the brown coal is collected on or near the surface. This is much finer than that from the pits, and is made up like peat, in forms in the shape of bricks. The bricks made at Margaret Hut amounted in 1862, to 3,000,000, equal to 15,000 cwts., and in 1863 to 2,250,000, equal to 12,000 cwts. In Upper Lusatia, and on the left banks of the Elbe, in 1863, there were only two pits which produced more than 400,000 bushels; 3 pits from 200,000 to 400,000 bushels; 4 pits from 100,000 to 200,000 bushels; 19 pits from 50,000 to 100,000 bushels; 36 pits from 20,000 to 50,000 bushels; 62 pits from 5,000 to 20,000 bushels; and 32 pits less than 5,000. Besides these, there were—1 pit belonging to the Crown, producing 424,712 bushels; 4 pits belonging to shareholders, producing 738,939 bushels; and 159 private pits, producing 4,681,833 bushels.

BOHEMIA.—In the year 1864 there were 306,345 tonnen of Bohemian brown coal brought into Berlin market.

Situation of Works.	Total produce, including Bricks.		Number of Bricks made from Refuse and Dust used for Fuel.
	bush.	cwts.	
1859—Upper Lusatia - -	1,975,444	2,963,166	2,381,200
Left bank of Elbe -	2,030,413	3,045,619	50,994,000
Total - - -	4,005,837	6,008,785	53,375,200
1860—Upper Lusatia - -	2,199,560	3,299,340	1,985,600
Left bank of Elbe -	2,075,546	3,113,319	50,706,600
Total - - -	4,275,106	6,412,659	52,692,200
1861—Upper Lusatia - -	2,375,446	3,563,169	1,635,000
Left bank of Elbe -	2,546,992	3,820,488	53,955,000
Total - - -	4,922,438	7,383,657	55,590,000
1862—Upper Lusatia - -	2,628,607	3,942,910	4,918,200
Left bank of Elbe -	2,701,269	4,051,904	53.788.900
Total - - -	5,329,876	7,994.814	58,707,100
1863—Upper Lusatia - -	2,815,869	3,909,080	4,581,000
Left bank of Elbe -	3,026,615	4,663,237	57,341,000
Total - - -	5,845,484	8,572,317	61,922,000

SWITZERLAND.—The coal mines of Semsales, Bogens, and St. Martin, produce a lignite coal of first rate quality. From 31,300 to 37,560 quintals, or from 2,817 to 3,130 tons, are extracted yearly.

GREECE.—The mines at Koumi produce a kind of coal known as lignite. According to the account furnished, 5,000 drachmas per annum is the maximum which has

Digitized by Google

been obtained from these mines since 1849, when the receipts amounted to 10,400 drachmas, and in 1847 to 12,000 drachmas.

BROWN DYE. Upon this subject some general views are given in the article DYEING, explanatory of the nature of this colour. This dye presents a vast variety of tints—from yellow and red to black-brown—and is produced either by mixtures of red, yellow, and blue with each other, or of yellow or red with black, or by substantive colours, such as catechu or oxide of manganese alone. We shall here notice only the principal shades, leaving their modifications to the caprice or skill of the dyer.

Brown, from mixture of other colours.

Wool and woollen cloths must be boiled with ⅛th their weight of alum and sulphotartrate of iron, afterwards washed, and winced through the madder bath, which dyes the portion of the stuff imbued with the alum red, and that with the salt of iron black, the tint depending upon the proportion of each and the duration of the madder bath.

A similar brown is produced by boiling every pound of the stuff with two ounces of alum and one ounce of common salt, and then dyeing it in a bath of logwood containing either sulphotartrate, acetate, or sulphate of iron; or the stuff may be boiled with alum and tartar, dyed up in a madder bath, and then run through a black bath of iron mordant and galls or sumach. Here the black tint is added to the red till the proper hue be hit. The brown may be produced also by adding some iron liquor to the madder bath, after the stuff has been dyed up in it with alum and tartar. A better brown of this kind is obtained by boiling every pound of wool with two ounces of alum, dyeing it up in cochineal, then changing the crimson thus given into brown, by turning the stuff through the bath after acetate of iron has been added to it.

Instead of cochineal, archil or cudbear, with a little galls or sumach, may be added.

A superior brown is produced upon cotton goods which have undergone the oiling process of the Turkey-red dye. Such goods must be galled, mordanted with alum (see MADDER), sulphate of iron, and acetate of lead (equal to ⅓rds of the alum); after washing and drying, dyed in a madder bath, and cleared with a soap boil. The tint of brown varies with the proportion of alum and sulphate of iron.

Brown may be produced by direct dyes.

The decoction of oak bark dyes wool a fast brown colour, of different shades according to the concentration of the bath. Alum improves the colour.

The bastard marjorum (*Origanum vulgare*) dyes cotton and linen a reddish-brown with acetate of alumina, and wool of a dark-brown.

The bark of the mangove tree (*Rhizophora mangle*) gives a red-brown colour to wool when boiled with alum and tartar, and a fast chocolate colour when sulphate of iron is added.

The pods of the East Indian *Mimosa cineraria* and the African *Mimosa nilotica*, called the *bablat*, give cotton a brown, with acetate or sulphate of copper.

The root of the white rose (*Nymphæa alba*) gives to cotton and wool beautiful shades of brown. A mordant of sulphate of iron and zinc is first given, and then the wool is turned through the decoction of the root till the wished-for shade is obtained. The cotton must be mordanted with a mixture of the acetates of iron and zinc.

Walnut (*Juglans regai*) peelings, when ripe, contain a dark-brown dyestuff, which communicates a permanent colour to wool. The older the infusion or decoction of the peel, the better dye does it make. The stuff is dyed in the lukewarm bath, and needs no mordant, though it becomes brighter with alum; or this dye may be combined with the madder or fustic bath, to give varieties of shade. For dyeing silk, this bath should be hardly lukewarm, for fear of causing inequality of colour.

The peelings of horse-chesnuts may be used for the same purpose: with muriate of tin they give a bronze colour, and with acetate of lead, a reddish-brown.

Catechu gives cotton a permanent brown dye, as also a bronze and mordoré, when its solution in hot water is combined with acetate or sulphate of copper, or when the stuff is previously mordanted with the acetates of copper and alumina mixed, sometimes with a little iron liquor, rinsed, dried, and dyed up, the bath being at a boiling heat.

Ferrocyanate of copper gives a yellow-brown or a bronze to cotton and silk.

The brown colour called *carmelite* by the French is produced by 1 lb. of catechu to 4 oz. of verdigris, with 5 oz. of muriate of ammonia. The bronze (*solitaire*) is given by passing the stuff through a solution of muriate or sulphate of manganese, with a little tartaric acid, drying, passing through a potash ley at 4° Baumé, brightening and fixing with solution of chloride of lime.

These examples show in how many ways the browning of dyes may be modified,

Digitized by Google

upon what principles they are founded, and how we have it in our power to turn the shade more or less towards red, black, yellow, blue, &c.

Under the heads of different substances employed by the dyers will be found some description of the methods employed for the purpose of extracting their colours. For some good practical receipts, Love's "Art of Cleaning, Dyeing, Scouring, and Finishing" may be consulted.

BROWN HÆMATITE. See IRON ORES.

BROWN IRON ORE (or Limonite). See IRON ORES.

BROWN OCHRE. The soft and decomposed varieties of brown iron ore.

BROWN SUGAR. Strictly, the common dark Muscovado sugar; ordinarily the common varieties of West Indian sugar.

BROWSE. A metallurgical term for a variety of slag.

BRUCINE. ($C^{46}H^{26}N^2O^8$; *syn.* Canimarine, Vomicine.) A very bitter and poisonous alkaloid accompanying strychnine in nux vomica and in the false angustura bark (*Brucia antidysenterica*). Brucine may be separated from strychnine by taking advantage of the greater solubility of the former and its nitrate. It is somewhat less poisonous than strychnine, and, like that base, is used in the treatment of paralysis, but in rather larger doses. Brucine is prepared by the same process as strychnine. —C. G. W.

BRUCITE. *Native magnesia*—the same as CHONDRODITE. So called after Dr. Bruce, of New York. This mineral accompanies other varieties of the magnesia minerals in the serpentine. It is broad-foliated, folia several inches square being easily obtainable, and either opaque silvery white, or translucent. Thomson gives its composition: magnesia, 66·67; protoxide of manganese, 1·57; protoxide of iron, 1·18; lime, 0·19; water, 30·39 = 100.

BRUNSWICK GREEN. An oxychloride of copper, used as a pigment. Copper filings or turnings are moistened with a solution of sal ammoniac, and left in contact with the air. The oxychloride thus forms: it is washed off with water, and dried at a gentle heat.

BRUSHES. (*Brosses*, Fr.; *Bürsten*, Germ.) Since Mr. Mason introduced his mode of securing the hairs in brushes, it has, in all the better class of brushes, been very generally adopted. His patent dates 1830. Modified contrivances, partaking more or less of the original conditions, have been introduced in the manufacture. The principles of Mr. Mason's invention and its subsequent modifications consist in a firmer mode of fixing the knots, or small bundles, of hair into the stock or the handle of the brush. This is done by forming grooves in the stocks of the brushes for the purpose of receiving the ends of the knots of hair, instead of the holes drilled into the wood, as in brushes of the common constructions. These grooves are to be formed like a dovetail, or wider at the bottom than the top; and when the ends of the knots of hair have been dipped into cement, they are to be placed in the grooves and compressed into an oval form, by which the ends of the hair will be pressed outwards into the recess or wider part of the dovetailed groove; or the grooves may be formed with threads or teeth on the sides, instead of being dovetailed; and the cement and hairs, being pressed into the teeth or threads, will cause them to adhere firmly to the stock or handle of the brush.

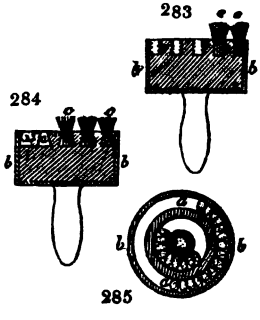

A metal ferrule may be placed on the outside of the stock of the brush, if necessary, and secured by pins or rivets, or in any other convenient manner, which ferrule may also form one side of the outer groove

Fig. 285 is a plan view of the stock of a round brush; *fig.* 283 is a section of the same; *a a* are the dovetailed grooves which are turned out of the wood; *b* is the metal ferrule; *c c* are knots, or small bundles of hair, to form the brush. After a number of the knots of hair are prepared, the ends are to be dipped into proper cement, and then placed into the grooves, when their ends are to be squeezed by a pair of pliers, or other means, which will compress them into the oval shape, as shown in *fig.* 284, and cause the ends of the hairs to extend outward under the dovetailed part of the recess.

The knots of hair are to be successively placed in the grooves, and forced up by a tool against the last knot put in, and so on, until the grooves are filled; *fig.* 285 is a brush with teeth or threads of a screw formed upon the sides of the groove; into these teeth or threads the cement and hairs will be forced by the compression, by which means they will be held firmly in the stock of the brush.

Digitized by Google

BRUSHES AND BROOMS:—

	Computed real value.
Imports in 1864	£13,016
Exports in 1864:	
To British Possessions in South Africa	2,571
British India: Bombay and Scinde	2,196
Madras	525
Bengal and Pegu	1,408
Singapore and Eastern Straits Settlements	151
Ceylon	283
Australia	29,552
British North America	3,296
British West India Islands and British Guiana	2,186
Other countries	8,767
	50,935

BRUSH ORE, or BLACK BRUSH. An iron ore peculiar to the Forest of Dean. See IRON ORE.

BRUSH WHEELS. In light machinery, wheels are sometimes made to turn each other by means of bristles fixed in their circumference; these are called brush wheels. The term is sometimes applied to wheels which move by their friction only.

BRYLE, or BROIL. *A mining term.* The loose matters found in a lode near the surface of the earth; probably a corruption of BEUHEYL (*which see*).

BUCKING. *A mining term.* Bruising of the ore. A *bucking iron* is a flat iron fixed on a handle, with which the ore is crushed; and a *bucking plate* is an iron plate on which the ore is placed to be crushed.

BUCKRAM. A linen cloth of much strength, made very stiff with size.

BUCKTHORN. (*Rhamnus catharticus.*) This plant is a native of England; it grows to the height of from 15 to 20 feet; its flowers are greenish-coloured, and its berries four-seeded. It is the fruit of this plant which is sold under the name of French berries. The juice of these, when in an unripe state, has the colour of saffron; when ripe and mixed with alum, it forms the sap-green of the painters; and in a very ripe state, the berries afford a purple colour. The bark also yields a fine yellow dye. See SAP GREEN.

The alder buckthorn (*Rhamnus frangula*) grows naturally, and is very abundant in woods and thickets in some parts of Britain. The berries of this species are often substituted for those of the above; but they are easily detected, since they contain only two seeds. In a green state, they dye wool green and yellow; when ripe, bluish grey, blue, and green. The bark also dyes yellow, and, with preparations of iron, black. —*Lawson.*

Rock buckthorn (*Rhamnus saxatilis*), the berries of which are used to dye morocco leather yellow. These, in common with the narrow-leaved buckthorn berries (*R. Clusii*) and those of the yellow-berried buckthorn (*R. infectoria*), are sold as Avignon berries. The wood of the *Rhamnus erythroxylon* (which is a native of Siberia, but grows freely in this climate), in a ground state, yields the bright red colour known to dyers under the name of *red wood.*

BUCKWHEAT. (*Blé Sarrasin*, Fr.; *Buckweizen*, Germ.) The common buckwheat (*Polygonum fagopyrum*, from *poly*, many, and *gonu*, a knee, in reference to its numerous joints) is cultivated for feeding pheasants and other game; and is now being largely used in France and in this country in distilleries.

"In France, besides being used for feeding fowls, pigs, &c., it is given to horses; and it is said that a bushel of its grains goes further than two bushels of oats, and, if mixed with four times its bulk of bran, will be full feeding for any horse for a week. Its haulm, or straw, is said to be more nourishing than that of clover, and its beautiful pink or reddish blossoms form a rich repast for bees."—*Lawson.*

It has been stated that the leaves of the common buckwheat (*Polygonum fagopyrum*) yield, by fermentation, Indigo-blue. On examining this plant, for the purpose of ascertaining whether this statement was correct, Schunck was unable to obtain a trace of that colouring matter, but he discovered that the plant contains a considerable quantity of a yellow colouring matter, which may very easily be obtained from it. This colouring matter crystallises in small primrose-yellow needles. It is very little soluble in cold water, but soluble in boiling water, and still more soluble in alcohol. Muriatic and sulphuric acid change its colour to a deep orange, the colour disappearing on the addition of a large quantity of water. It dissolves easily in caustic alkalis, forming solutions of a beautiful deep yellow colour, from which it

Digitized by Google

is again deposited in crystalline needles on adding an excess of acid. It is, however, decomposed when its solution in alkali is exposed for some time to the air, being thereby converted into a yellowish brown amorphous substance, resembling gum. Its compound with oxide of lead has a bright yellow colour, similar to that of chromate of lead. The compounds with the oxides of tin are of a pale but bright yellow colour. On adding protosulphate of iron to the watery solution, the latter becomes greenish, and, on exposure to the air, acquires a dark green colour, and appears almost opaque. The watery solution imparts to printed calico, colours, some of which exhibit considerable liveliness. Silk and wool do not, however, acquire any colour when immersed in the boiling watery solution, unless they have previously been prepared with some mordant. The composition of this substance in 100 parts is as follows:—carbon 50·00, hydrogen 5·55, oxygen 44·45. Its formula is probably $C^{30}H^{28}O^{28}$. It appears to be identical with *Rutine*, the yellow colouring matter contained in the *Ruta graviolens*, or common rue, and in capers; and with *Ilixanthin*, a substance derived from the leaves of the common holly. From 1000 parts of fresh buckwheat leaves, a little more than one part of the colouring matter may be obtained. As the seed of the plant is the only part at present employed, it might be of advantage to collect and dry the leaves, to be used as a dyeing material.—E. S.

The *Tartarian Buckwheat* (*Polygonum Tartaricum*) differs from the former in having the edges of its seeds twisted. It is not considered so productive, but it is more hardy; and better adapted for growing in mountainous situations.

The *Dyer's Buckwheat.* (*Polygonum tinctorium.*) This plant was introduced to the Royal Gardens at Kew by Mr. John Blake, in 1776. Authentic information as to its properties as a dye-yielding plant was only received at a comparatively recent period, from missionaries resident in China, where it has always been cultivated for its colouring matter. In Europe, attention was first directed to its growth by M. Delile, of the Jardin du Roi at Montpellier, who in 1835 obtained seeds from the Baron Fischer, Director of the Imperial Gardens at St. Petersburg. It has since that time become sufficiently valuable to render its cultivation as a dye drug of sufficient importance. The Japanese are said to extract blue dyes from *Polygonum Chinensis*, *P. barbatum*, and the common roadside weed, *P. aviculare.—Lawson.*

BUDDLING. *A mining term.* The process of separating the metalliferous ores from the earthy matters with which they are associated, by means of an inclined hutch, called a *buddle*, over which water flows. It is indeed but an arrangement for availing ourselves of the action of flowing water to separate the lighter from the heavier particles of matter. See DRESSING ORES.

BUDE LIGHT. A highly illuminating flame invented by Sir Goldsworthey Gurney, of Bude, in Cornwall. Oxygen gas is driven through the centre of an argand flame of ordinary coal gas, by which an intense combustion is established, and hence the high illuminating power is obtained.

BUFF LEATHER. A leather prepared with some albuminous substance and oil. See LEATHER.

BUFF STICKS. Pieces of wood upon which buff leather is fastened; they are used for polishing.

BUGLE. A kind of bead used for ornamenting dresses.

BUHL. Buhl-work consists of inlaid veneers, and differs from marquetry in being confined to decorative scrollwork, frequently in metal, while the latter is more commonly used for the representation of flowers and foliage. Boule, or Buhl, was a celebrated cabinet-maker in France, who was born in 1642 and died in 1732. He was appointed "Tapissier en titre du Roi," and he gave his name to this peculiar process of inlaying wood with either wood or metal. See MARQUETRY, PARQUETRY.

BUHR-STONE, mineralogically, is a cellular flinty quartz rock, constituting one of the jaspery varieties of the quartz family. A celebrated grit-stone, much used in France and other parts of the continent for grist mills. Those of La Ferté-sous-Jonarre (Seine et Maine) are regarded as superior to all others. In consequence of the necessity for carefully piecing these stones together, they are naturally expensive; yet the demand for buhr stones continues great. Written also BURR and BURRH.

BUKE or BUCK MUSLIN. A clear muslin woven for tambour working, and used principally for ladies' dresses. It is often called "book" muslin.

BULL-DOG. A name given to an iron slag. See IRON.

BULLY TREE. A species of *Mimusops* (*mimus.* a mimic, *ωψ*, appearance) which grows in Demerara and Berbice, where it is used for house frames and other purposes in building, also for the spokes of wheels. It may be obtained nearly 30 feet long, and squares about 25 inches.

Digitized by Google

BULRUSH or TALL CLUB. (*Scirpus lacustris*; Celtic, *cirs*, rushes.) The bulrush, belonging to the natural order of *Cyperaceæ*, grows naturally on alluvial soils which are occasionally covered with fresh water. It is much used by coopers for putting between the staves of barrels, and by chair makers. Many other plants belonging to this order are employed for economical purposes, such as forming seats, ropes, mats, and fancy basket-work, also for thatching houses. In 1864, we *imported* 680 loads, valued at £2,234; 30 bundles making a load.

BUNCH. *A miner's term* for an isolated mass of ore. A lode is said to be *bunchy* when the metalliferous ore is found in irregular and sparsely distributed masses, the other portions being made up of valueless earthy minerals.

BUNG. A large cork for casks. The name in Persia for hemp, the *Cannabis sativa*.

BUNTING. An open-made worsted stuff, used for making flags.

BURGUNDY PITCH Burgundy pitch, when genuine, is made by melting frankincense (*Abietis resina*) in water and straining it through a coarse cloth. The substance usually sold as Burgundy pitch is, however, common resin incorporated with water and coloured with palm oil. In some cases American turpentine is employed. See PITCH and TAR.

BURLERS. Women are so called who are engaged in removing from woollen cloths, with tweezers, all irregular threads or hair.

BURNING HOUSE. *A miner's term.* In Cornwall the kiln or oven in which the tin and other ores are placed to sublime the volatile constituents, sulphur and arsenic, is so called.

BURNT LEAVINGS. See COPPER.

BURNT SUGAR. CARAMEL (*which see*).

BURROW. *A miner's term* for a heap of rubbish.

BUSKS. The flat whalebones, or steel supports for the stays of women.

BUSSORAH GUM. See BASSORA.

BUTT. A large cask. The beer and wine butt should contain three barrels, or 108 imperial gallons. The wine butt formerly held 130 of the old wine gallons.

In the leather trade, a butt is a rounded crop, or a full hide.

BUTTER. (*Beurre*, Fr.; *Butter*, Germ.) Butter is the fatty matter of milk, usually that of the cow. Milk is composed of butter, caseine, sugar of milk, several salts, and water. The butter exists in the form of very small globules of nearly uniform size, quite transparent, and strongly refractive of light. Milk left in repose throws up the lighter particles of butter to the surface as cream. It was imagined that the butter was separated in the process of churning, in consequence of the milk becoming sour; but this is not the case, for milk rendered alkaline by bicarbonate of potash affords its butter fully more readily than acidulous milk. The best temperature for churning milk or cream is 53° F.; that of 60° is too high; and under 50° it is too low. By the churning action the heat rises from 3° to 4° F. All the particles of butter are never separated by churning; many remain diffused through the butter-milk, and are easily discoverable by the microscope. These are more numerous in proportion to the bulk of the liquid; and hence it is more economical to churn cream than the whole milk which affords it. It is computed that a cow which gives 1800 quarts (old English) of milk per annum eats in that time 8000 lbs. of hay, and produces 140 lbs. of butter. Analysis shows that this weight of hay contains 168 lbs. of fat. The finest flavoured butter is obtained from milk churned not long after it is drawn; but the largest proportion is derived from the cream thrown up by milk after standing 24 hours in a temperature of about 50° F. The butter-milk, which contains the very fermentable substance *caseine*, should be well separated from the butter by washing with cold water, and by beating with the hands, or preferably, without water, for the sake of fine flavour, by the action of a press.

The Tartars and French have been long in the habit of preserving butter, by melting it with a moderate heat, whereby are coagulated the albuminous and curdy matters remaining in it, which are very putrescible. This fusion should be made by the heat of a warm bath, about 176° F., continued for some time, to effect the more complete purification of the butter. If in this settled liquefied state it be carefully decanted, strained through a tammy cloth, and slightly salted, it may be kept for a long time nearly fresh, without becoming in any degree rancid, more especially if it be put up in small jars closely covered.

In Cornwall and western Devon, the first process in the manufacture of butter is the formation of the cream by heat. After the milk has stood for from twelve to twenty hours at rest, so that the cream globules may rise to the surface, it is exposed to a very slow heat, until it acquires a temperature of about 200° F.; care

Digitized by Google

being taken that, if it exceeds this, the milk never boils. The pellicle of cream being formed, the vessel is removed from the fire, and allowed to cool; when cold, the butter is made from this cream in the usual way.

When subjected to microscopical examination, milk is found to consist of infinitely minute globular particles floating in a serous fluid. Raspail says the largest of these globules are not above 1–2500th of an inch in diameter. These globules consist essentially of butter. See MILK.

Butter is preserved by salting in Ireland, in Holland, and in the Channel Islands, which, together with the preserved butter of many of the English counties, is introduced largely into London.

BUTTERS, MINERAL. The old chemists called several of the metallic chlorides,—butters; as *butter of antimony, butter of tin, butter of bismuth*, &c.

BUTTON MANUFACTURE. This art is divided into several branches, constituting so many distinct trades. Metal, horn, leather, bone, and wood are the substances frequently employed for buttons, which are either plain, or covered with silk, mohair, thread, or other ornamental materials. The most durable and ornamental buttons are made of various metals, polished, or covered with an exceedingly thin wash, as it is termed, of silver or gold.

The buttons intended to be covered with silk, &c., are termed in general *moulds*. They are small circles, perforated in the centre, and made from those refuse chips of bone which are too small for other purposes. For the large and coarser buttons, pieces of hard wood, are sawn into thin flakes, of an equal thickness; from which, by a machine, the button moulds are cut out at two operations.

White metal and brass buttons, as well as plated buttons, are stamped by the fly-press, out of copper-plate, covered on one side with silver at the flatting-mill. The copper side is placed upwards in stamping, and the die or hole through which they are stamped is rather chamfered at its edge, to make the silver turn over the edge of the button. The backs are stamped in the same manner as the gilt buttons. The shanks are soldered on with silver solder, and heated, one by one, in the flame of a lamp, with a blow-pipe urged by bellows. The edges are now filed smooth in the lathe, care being taken not to remove any of the silver which is turned over the edge. They are next dipped in acid, to clean the backs, and boiled in cream of tartar and silver, to whiten them: after which they are burnished, the backs being first brushed clean by a brush held against them as they revolve in the lathe. The mode of burnishing is the same as for gilt buttons. When the buttons are first cut they have exceedingly sharp edges, to correct which and to produce a round, smooth, wirelike edge, they are rolled between two parallel pieces of steel, one moving horizontally past the other, which is fixed, and both of them containing polished grooves on their corresponding faces. To the movable piece A, *fig.* 286, motion is given by means of the handle B. In both the grooved pieces, which are abont eighteen inches in length, there are semi-circular openings as at *a*, which, by corresponding once during each revolution of the handle, admit of the blank *e* being dropped into the grooves, after which it is carried, revolving as it proceeds, between the pieces of steel, till coming to the hole *i*, it drops through into a basket. This operation is performed with amazing celerity by a boy, who drops the blanks into the cavity with his left hand, while he turns the handle with his right: they are now ready to receive the shanks.

286

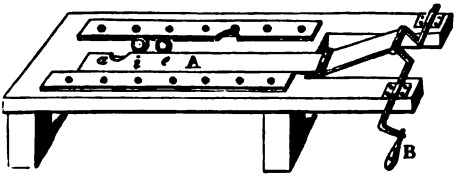

Button shanks are made by hand from brass or iron wire, bent and cut by the following means:—

The wire is lapped spirally round a piece of steel bar. The steel is turned round by screwing it into the end of the spindle of a lathe, and the wire by this means lapped close round it till it is covered. The coil of wire thus formed is slipped off, and a wire fork or staple with parallel legs put into it. It is now laid upon an anvil, and by a punch the coil of wire is struck down between the two prongs of the fork, so as to form a figure 8, a little open in the middle. The punch has an edge which marks the middle of the 8, and the coil being cut open by a pair of shears along this mark, divides each turn of the coil into two perfect button shanks or eyes.

Buttons to be gilded are stamped out from copper (having sometimes a small alloy of zinc), laminated in the flatting mill to the proper thickness. These circular pieces, called blanks, are annealed in a furnace to soften them; and the maker's name, &c. is struck on the back by a monkey, which is a machine very similar to a pile engine.

Digitized by Google

This stamp also renders the face very slightly convex, that the buttons may not stick together in the gilding process. The burnishing is performed by a piece of hematite or blood-stone, fixed into a handle, and applied to the button as it revolves by the motion of the lathe.

A great number of the buttons, thus prepared for gilding, are put into an earthen pan, with the proper quantity of gold to cover them, amalgamated with mercury in the following manner: — The gold is put into an iron ladle, and a small quantity of mercury added to it; the ladle is held over the fire, till the gold and mercury are perfectly united. This amalgam being put into the pan with the buttons, as much aquafortis, diluted with water, as will wet them all over, is thrown in, and they are stirred up with a brush, till the acid, by its affinity to the copper, carries the amalgam to every part of its surface, covering it with the appearance of silver. When this is perfected, the acid is washed away with clean water. This process by the workman is called quicking.

The old process, in gilding buttons, called the drying off was exceedingly pernicious to the operator, as he inhaled the vapour of the mercury, which is well known to be a virulent poison. In order to obviate this, the following plan of apparatus has been employed with success. The vapour, as it rises from the pan of buttons heated by a charcoal fire, is conducted into an oblong iron flue or gallery, gently sloped downwards, having at its end a small vertical tube dipping into a water cistern, for condensing the mercury, and a large vertical pipe for promoting the draught of the products of the combustion. By act of parliament 5 grains of gold are allotted for the purpose of gilding 144 buttons, though they may be tolerably well gilt by half that quantity. In this last case, the thickness would be about the 214,000th part of an inch.

Mr. Holmes of Birmingham patented a process which was fully described in the former editions of this work; that portion of the description is retained which relates to such parts of his machinery as are found upon inquiry to be still in use.

Having explained the peculiar forms of his improved metallic shanks for buttons, and the tools employed in making the same, he proceeds to describe the machinery or apparatus by which he carries his invention into effect. He takes a sheet of metal, say about 30 or 40 feet long, and of the proper width and thickness, which thin sheet is to be wound upon a roller, and placed above the machine, so that it can be easily drawn down into the machine as required for feeding the punches and dies. *Fig.* 287 is a plan view of a machine intended to work any convenient number of sets of punches and dies placed in rows. *Fig.* 288 is a side view, and *fig.* 289 a longitudinal section, taken through the machine; *figs.* 290 and 291 are transverse sections taken through the machine between the punches and counter dies, *fig.* 290 representing its appearance at the face of the punches, and *fig.* 291 the opposite view of the counter dies. *a a* are the punches; *b b*, the counter dies; each being mounted in rows in the steel plates *c c*, fixed upon two strong bars *d* and *e*, by countersunk screws and nuts, the punches and dies being retained in their proper position by the plates, which are screwed

287

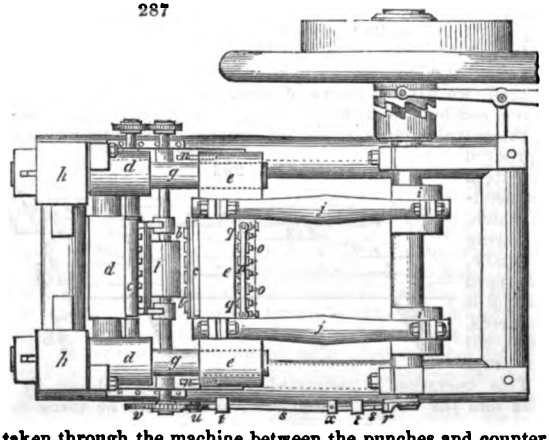

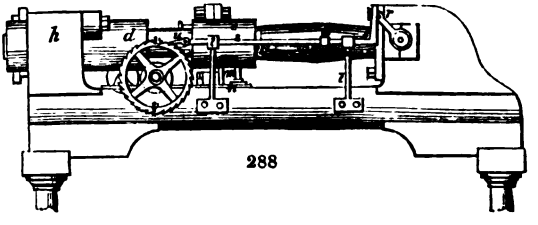

288

on to the front of the steel plates, and press against the collars of the punches and dies. The bars *d* and *e* are both mounted on the guide-pins *g g*, fixed in the heads, *h h*, of the frame, which guide-pins pass through the bosses on the ends of the bars. The bar *d* is stationary upon the guide-pins, being fixed to the heads, *h h*, by nuts and screws passed through ears cast on their bosses. The bar *e* slides freely upon the guide-pins *g g*, as it is moved backwards and forwards by the crank *i i*, and connecting-rods *j j*, as the crank shaft revolves. The

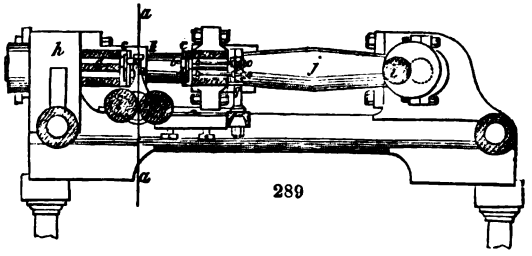

289

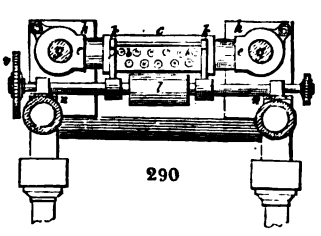
290

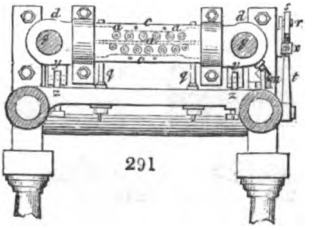
291

sheet of thin iron to be operated upon is placed, as before stated, above the machine; its end being brought down as at *a a*, and passed between the guide-rod and clearing plate *k*, and between the pair of feeding rollers *l l*, which, by revolving, draw down a further portion of the sheet of metal between the punches and dies, after each operation of the punches.

As the counter dies advance towards the punches, they first come in contact with the sheet of metal to be operated upon; and after having produced the pressure which cuts out the discs, the perforations of the sheet are pushed on to the ends of the punches by the counter dies; and in order that the sheet may be allowed to advance, the carriage which supports the axles of the feeding-rollers, with the guide-rod and clearing-plate, are made to slide by means of the pin *m*, which works in a slot in the sliding-piece *n*, bearing the axis of the feeding-roller *l l*, the slide *n* being kept in its place on the framework by dovetailed guides, shown in *fig.* 291.

When the counter dies have advanced near to the sheet of metal, the pin *m* comes in contact with that end of the slot in the piece *n* which is next to the punches, and forces the carriage with feed-rollers and clearing-plate, and also the sheet of metal, onwards, as the dies are advanced by the reaction of the cranks; and after they have cut out the discs, and raised the shanks, the sheet of metal will remain upon the punches; and when the bar *e* returns, the finished backs and shanks are forced out of the counter dies, by the clearing-pins and rods *o o*, which project through the bar *e*, and through the holes before mentioned in the counter dies; these clearing-pins being stationary between the bars *p p*, mounted upon the standard *q q*, on the cross bar of the frame, as shown in *figs.* 287, 289, 290. Immediately after this is done, the pins *m* come in contact with the other ends of the slots in the pieces *n*, and draw back the feeding-rollers *l l*, together with the clearing-plate *k* and the sheet of metal, away from the punches, into the position represented in the figures.

At this time the feeding of the metal into the machine is effected by a crank-pin *r*, on the end of the crank-shafts coming in contact with the bent end of the sliding-bar *s*, supported in standards *t t*; and as the crank-shaft revolves, this pin *r* forces the bar *s* forward, and causes the tooth or pall *u*, on its reverse end, to drive the ratchet-wheel *v* one or more teeth; and as the ratchet-wheel *v* is fixed on to the end of the axle of one of the rollers *l*, it will cause that roller to revolve; and by means of the pair of spur-pinions on the other ends of the axles of the feeding rollers, they will both revolve simultaneously, and thereby draw down the sheet of metal into the machine. It will be perceived that the standards which support the clearing-plate and guide-bar are carried by the axles of the feeding rollers, and partake of their sliding motion: also that the clearing-pins *o*, are made adjustable between the bars *p*, to correspond with the counter dies. There is an adjustable sliding-stop *x* upon the bar *s*, which comes in contact with the back standard *t*, and prevents the bar *s* sliding back too far, and con-

Digitized by Google

sequently regulates the quantity of sheet metal to be fed into the machine by the pall and ratchet-wheel, in order to suit different sizes of punches and dies. In case the weight of the bar *c*, carrying the counter dies, should wear upon its bearings, the guide-pins *g g* have small friction-rollers *y y*, shown under the bosses of this bar, which friction-rollers run upon adjustable beds or planes, *z z*, by which means the guide-pins may be partially relieved from the weight of the bar *c*, and the friction consequently diminished.

Buttons of Horn.—Mr. Thomas Harris obtained, in April, 1841, a patent for improvements in the manufacture of horn buttons, and in their dies. His invention relates, first, to a mode of applying flexible shanks to horn buttons; secondly, to a mode of ornamenting horn buttons, by inlaying the front surface thereof; thirdly, to a mode of ornamenting what are called horn buttons, by gilding or silvering their surfaces; fourthly, to a mode of constructing dies, by applying separate boundary circles to each engraved surface of a die, by which the process of engraving, as well as the forming of accurate dies, will be facilitated; fifthly, to a mode of constructing dies, used in the manufacture of horn buttons, whereby the horn or hoof employed will not be permitted to be expressed beyond the circumference of the button.

Fig. 292 represents, in section, a pair of dies, A and B, used in producing the

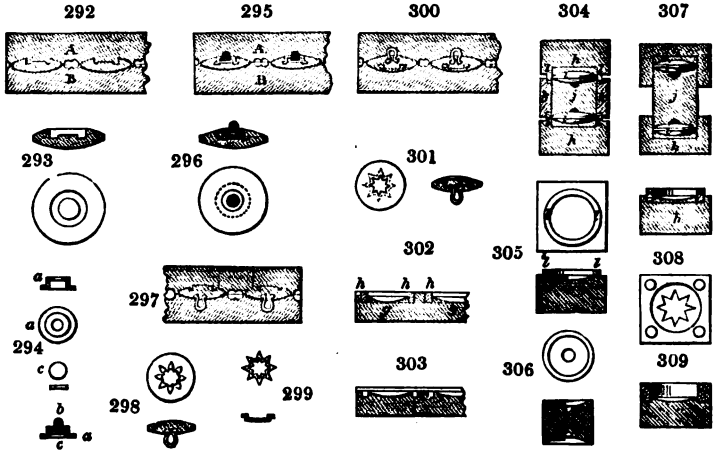

improved horn buttons, according to the first improvement; the upper die A is made to produce the back surfaces of the buttons, and the recess or groove for receiving the flexible shank. *Fig.* 293 shows, in section and back view, the form of a button produced by the dies.

Buttons thus formed are now ready to receive flexible shanks; and if the buttons are to have plain smooth front surfaces, then, in fixing the flexible shanks, the same kind of under die, B, may be used; but if the front surface of the button is to be embossed or ornamented, then, in place of that die, a similar one, having engraved or suitably ornamented surfaces, is to be used. When fixing the shanks to buttons, the lower or face die, containing the previously formed buttons, is to be heated till a drop of water will nearly boil upon it.

The shank is applied as follows:—a metal shell or collet *a* (see *fig.* 294) is placed over the flexible shank *b*, and a plate of metal *c* is laid under the shank; these are placed in the groove or recess of the button, which had been previously heated in the lower die; the upper die A (*fig.* 295) is then to be placed on the lower die B, and the two submitted to pressure, until they become cool, when the shank will be firmly attached, as shown at *fig.* 296, and the bottom may be finished in the usual way.

The second part of the invention, which relates to a mode of ornamenting horn buttons, by inlaying the front surface thereof, is performed in a manner similar to what has been above described, for fixing flexible shanks, and consists in first forming the front face or surface of a button, in suitable dies, for providing a recess; and then, by a second pressure in dies, to fix the ornamental surface; and, when desired, the surrounding front surface of the button may be embossed. *Fig.* 297 is a longitudinal section of a pair of dies, for forming a recess in the face of a button. *Fig.* 298 shows, in front view and section, a horn button produced by these dies. *Fig.* 299 shows a metal ornament, to be inlaid or fixed in the front surface of the button, but it should be stated that the ornamenting surface, to be fixed in the front surface of the

Digitized by Google

button, may be of pearl or other material; and the size and device varied according to taste. *Fig.* 300 shows in section a pair of dies, for giving the second pressure for affixing the ornamental surface; and, if desired, the remaining front surface of the button may be ornamented, by having the lower die engraved, or otherwise suitably ornamented. *Fig.* 301 shows in front view and section a button made according to this part of the invention.

The third part of the invention relates to a mode of ornamenting horn buttons, by gilding or silvering their surfaces. This is effected by applying a suitable cementing or adhesive material with a soft brush to the button, in order that gold or silver leaf may be attached to its surface. The cementing or adhesive material preferred to be used is dressing varnish rendered sufficiently liquid by essence of turpentine; and when the varnish is nearly dry, gold or silver leaf is applied thereto, and pressed in the same manner as practised when gilding and silvering other surfaces; by thus treating horn buttons a very novel manufacture of that description of buttons may be produced.

The fourth part of this invention relates to the construction of dies used in the manufacture of horn buttons. *Fig.* 302 is a section of a die, constructed according to this part of the invention; and *fig.* 303 is a section showing the die without the bounding circles, which confine the patterns; *f* is the die engraved at the parts *g g*; around each of which engraved surfaces are circular grooves or recesses to receive the bounding circles *h h*, which fit accurately. By the after insertion of these circles, the workman is not confined to move his graver within the bounding line, as that line is not present when engraving the plate; and the graver may pass beyond, and the grooves and the bounding circles may readily be made with great accuracy to each of the engraved surfaces.

The fifth part of the invention also relates to a mode of constructing dies for the manufacture of horn buttons, and consists in forming the dies so that the bounding circle shall be a sufficient depth for the counter die to slide within it, and fit accurately in order that the circumference of each button shall be smoothly and accurately formed. *Fig.* 304 represents in section two dies, and one counter die, made according to this part of the invention; *fig.* 305 shows one of the dies in plan and section; and *fig.* 306 a plan and section of a counter die suitable for flexible shank buttons. *h h* are the dies, having the engraved surfaces *i i* on separate circular discs of metal, such as have heretofore been used; *j* is a counter die, and *k* a tube within which the counter die is held, the object of this tube being to guide the projecting edges *l l* of the dies as shown, and thus keep the dies and counter dies correct to each other. *Fig.* 307 is a section of two dies *h*, and a counter die *j*; but in this case the tube *k* is dispensed with, the dies being deeper sunk, and thus guiding the counter die correctly. By the use of these dies, the edges of horn buttons will be more accurately formed, and consequently require less finishing. This description of dies may be made according to the mode described in the fourth part of this invention; that is by forming the boundary circle separately, as will be understood by referring to *fig.* 308, which is a side section of a die complete, with its boundary circle formed in a similar manner to that described above. *Fig.* 309 represents, in plan and section, a variation in the means of affixing a separate bounding circle to each engraved surface; and it is suitable for working without the tube. In using these dies they are to be heated but slightly, whether for buttons with metal shanks, or to receive flexible shanks, and are to be pressed as heretofore. The patentee claims, firstly, the mode of manufacturing horn buttons with flexible shanks, by first forming buttons by pressure and heat, and then, by a second pressure in dies, to affix flexible shanks thereto, as above described. Secondly, the mode of ornamenting horn buttons, by causing suitable surfaces to be affixed in the front surfaces, by pressing the buttons with the ornaments in dies, as above described. Thirdly, the mode of ornamenting horn buttons by gilding and silvering their surfaces as described. Fourthly, the mode of constructing dies used in the manufacture of horn buttons, by applying separate bounding circles to each engraved surface, for a button; and fifthly, the mode of manufacturing horn buttons in dies, wherein the horn or hoof is prevented from being expressed at the circumference of the buttons as described.

BUTTONS, COVERED.—Mr. Joseph Parkes obtained in 1840, a patent for improvements in the manufacture of covered buttons made by dies and pressure, by the application of horn as a covering material. The process resorted to by the patentees for carrying out this invention is very similar to that pursued in manufacturing Florentine buttons; such modifications being applied as are rendered necessary for adapting such process to the peculiar nature of the material employed for covering the face of each button. *a* (*fig.* 310) shows a plan of a disc of iron plate, with four projecting points, which is formed by suitable dies in a fly-press, as is well understood; the points are then turned down, and the disc *a* is sunk into the shape shown at *fig.* 311, and two such sunk discs are applied to the internal core of the button-board of each button: *b* (*fig.*

Digitized by Google

312) shows a plan and edge view of a circular disc of button-board suitable for forming the internal core of a button.

The dies being placed in suitable presses, as is well understood in using similar dies in manufacturing Florentine and other covered buttons, one of the sunk discs *a* is placed in the under die, with the points upwards, having a disc of button-board placed on the points, as shown at *fig.* 313; the upper die or punch is then caused to descend and press the button-board *b* into the shape shown at *fig.* 314; which, when thus formed, is to have a die *a* applied on the other side, as shown at *fig.* 315. The disc *a*, to be next fixed to the button-board, is placed in a suitable die, the disc which has already been fixed being upwards; the die or punch is now to be pressed down, which will produce the button-board, with the discs *a a*, on either side, into the shape shown at *fig.* 316; and it will be seen, that one of the discs will by the shape of the die, be sunk concave, whilst the other disc *a*, on the other side, will be formed convex, or according to the figure of the face of the intended button.

The core of button-board (*fig* 316) is now ready to be inserted into the fabric which is to become the flexible shank of the button, and which flexible shank is formed by sinking a portion of fabric in suitable dies, as is well understood when making similar shanks for Florentine or other covered buttons; and the shank being so sunk, the button-board or core (*fig.* 316) is to be placed thereon, with the concave surface

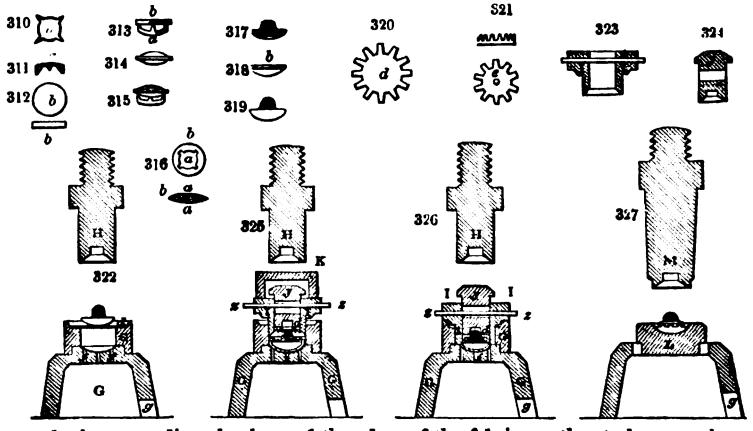

towards the protruding shank; and the edges of the fabric are then to be pressed over the core, as is well understood, which will produce the partly formed button (*fig.* 317), which is a side view, and consists of the shank containing the core, which is next inserted into the metal shell *e* (*fig.* 318) and these parts being placed in a suitable die, are pressed together, and the partly manufactured button (*fig.* 319) will be produced, consisting of the shank containing the core, covered on the front surface with the metal shell *c*, which, by the die, has its edges bent down on the fabric of the flexible shank. The button, thus far formed, is now in a condition to be covered with a thin plate of horn, which is performed in the following manner:—*d* (*fig.* 320) shows a disc of horn, cut out by suitable dies, the circumference being scolloped, in order that in folding over the mould (*fig.* 319) the horn may not be puckered. *e e* (*fig.* 321) shows a collet, for affixing the covering of horn to the button, the collet being similar to that used in what is called "Sandar's plan of making Florentine and other covered buttons."

The method of covering the mould of the button with horn is described as follows:—*Fig.* 322 represents, in section, a lower covering die, and also a proper punch for pressing the parts into the lower die; these dies being in a suitable press, as is well understood. The lower die is to be kept heated to such an extent that the workman can just bear his hand to rest, for a very short time, on the upper surface of the die; the heating is preferred to be accomplished by means of a flame of gas below the die; and it will be seen that there are holes, *f f*, in the die, through which the heat of the flame may pass, and *g* is an opening to allow of atmospheric air flowing under the lower die. The disc of horn *d* is placed in the lower die *g*. The shape or mould (*fig.* 319) is then placed on the horn, and the punch or die H, is caused to descend, and press the parts into the die *g*; the punch *h* is then raised, in order to allow of the introduction of the parts shown at *figs.* 323 and 324, which consist of the tube I, and the punch or die *j*. The lower edge of the tube I is made bell-mouthed, so as to cause the scolloped edges to be pressed on the back of the buttons, and the die or punch *j* is to cause the collet to be forced through the horn in the button: and, in using these

Digitized by Google

parts, the collet is placed in the tube I, which with its punch is inserted into the die *s*, as shown at *fig.* 325, which figure represents the die *g* and punch *h* in the condition just described, after having forced the parts into the die G; and this figure also shows the tube I, with a collet *d* and the punch or die J placed in the tube I; and all things are in a condition to receive the pressure of the punch H. In order to prevent the pressure coming on the punch or die J before the horn has been folded down by the tube I, the hollow block K is placed over the die or punch J; consequently when the punch H is caused to descend, it will force down the tube I, and cause it to gather the edges of the horn, and press them on the back of the mould of the button, when the punch H will be raised again, and the block K removed, which will leave all things in the position shown at *fig.* 326; and then again, the bringing down of the punch H will cause the die or punch J to descend, and force the collet into the button, the die J being retained in the tube I by means of the pin *z*, passing through a slit formed therein, which allows of the die J rising and falling in the tube I, but prevents its coming out of that tube. The button, thus far formed, is now in a condition to be completed in the finishing dies (*fig.* 327), the lower dies being kept heated in a similar manner to the die C. The dies being fixed in a suitable press, the button to be finished is inserted into the die L (which may be ornamented or plain), with the shank upwards, and the punch or die M is caused to descend and press the button into shape.

When the front of the button is to be plain, the disc of horn should be polished before being used for covering; but when used to cover a button, and finished by an engraved or ornamented die, the polishing is not necessary. The button being thus made is to be finished by placing it in a lathe to be "edged," as is commonly practised in finishing horn buttons.

The patentee does not claim the means of making the mould or shape shown at *fig.* 319, nor the dies employed when separately considered, very similar dies having been before used in the manufacture of other covered buttons; nor does he confine himself thereto, so long as the peculiar character and essence of the invention be retained; viz., that of manufacturing covered buttons, made by dies and pressure by the application of thin sheet horn as the covering material. He claims the mode herein described of manufacturing covered buttons by the application of horn as a covering material.

PORCELAIN BUTTONS.—These buttons were manufactured by Messrs. Minton and Co. under Prosser's patent, for the compression of dry porcelain clay in moulds (the process will be fully described under the head TESSERÆ). This manufacture is however abandoned in this country; but Mr. Bagaterasse has a large establishment at Briare, where he manufactures these buttons on a large scale, and being in competition with Mr. Lebeuf of Creil, they are sold very cheaply. Bagatarassse has greatly improved the process by striking several hundred buttons at once, instead of doing them singly as by Prosser's process. See TILES and TESSERÆ.

In 1864 we *imported* BUTTONS and STUDS of metal to the value of 27,970*l.*; and of other sorts 60,546*l.*

BUTYLAMINE ($C^8H^{11}N$). A volatile organic base, homologous with methylamine. It is found in the more volatile portion of bone oil. It may be prepared artificially by processes analogous to those employed for methylamine, amylamine, &c., substituting the butylic cyanate, urea, or iodide, for those of methyle and amyle. See AMYLAMINE.—C. G. W.

BUTYRIC ACID. A volatile fatty acid, discovered by Chevreul, who obtained it by saponifying butter with an alkali. Rancid butter owes its smell to the formation of this acid. See Watts' "Dictionary of Chemistry."

BUTYRIC ETHERS. Compounds formed by the direct action of butyric acid on alcohols. To the presence of small quantities of these ethers, the peculiar flavour of pine apples, melons, and some other fruits is due. Pine apple rum owes its flavour to the presence of the butyrate of ethyl. "A solution of butyric ether is very extensively used in perfumery, and in confectionery, under the name of pine apple oil. It is prepared for this purpose, by the following process:—butter is saponified by a strong solution of potash ley; the soap is dissolved in very little absolute alcohol, and to the solution is added a mixture of alcohol and sulphuric acid, until a strongly acid reaction is set up. The whole is then distilled; heat being applied as long as anything comes over with a fruity odour." See Watts' "Dictionary of Chemistry."

BUTTY. A miner who contracts to raise coal at a certain price per ton. He employs men to do his work, and they have usually an overlooker engaged by the butty, and called the "Doggy."

BUXUS. The box tree. See BOX WOOD. The value of the box wood sent from Spain to Paris is given as 10,000 francs a year. The box wood tree formerly grew abundantly at Boxhill, in Surrey. In 1815 the trees were cut down and produced upwards of 10,000*l.*—*Baird.*

BUZZING, or BUSTLING. Terms sometimes applied to the process of working scrap iron in the charcoal hearth (*Percy.*) See IRON.

Digitized by Google

C

CABLE. (*Cable*, Fr.; *Ankertau*, Germ.) A strong rope or chain, connecting the ship with the anchor for the purpose of mooring it to the ground. The *sheet anchor* cable is the strongest, and is used at sea after the bower, which is in constant use, goes, gives way, or requires help: the *stream* cable is smaller, being used chiefly in rivers. A cable's length is 100 to 140 fathoms in the merchant service; in the Royal Navy 4 cables are employed each of 100 fathoms, 2 cables being attached end to end. The greatest improvement in mooring vessels has been the introduction of the chain cable, which, when duly let out, affords in the weight of its long catenary curve, an elastic tension and play to the ship under the pressure of the wind. The dead strain upon the anchor is thus greatly reduced, and the sudden pull by which the flukes or arms are readily snapped is in a great measure obviated. The best iron cables are chains made of links, whose sides are stayed by cross bars or studs, welded across the middle of the link. Experience has taught that the ends of these links wear out much sooner than the sides. To remedy this evil, Mr. Hawkes, iron manufacturer, obtained a patent in July, 1828, for constructing these anchor chains with links considerably stouter at the ends than in the middle. With this view he forms the short rods of iron, of which the links are to be made, with swells or protuberances about one-third of their length from each of their ends, so that when these are welded together, the slenderer parts are at the sides, and the thicker at the ends of the elliptic links. Such rods as the above are formed at once by rolling, swaging, or any other means; but in practice, this plan has not been extensively carried out; the simple round iron seems best.

The first avowed proposal to substitute iron cables for cordage in the sea service is stated to be made by Mr. Slater, surgeon of the Navy, who obtained a patent for the plan in 1808, though he does not seem to have had the means of carrying it into effect —a very general misfortune with ingenious projectors. It was Lieut. Samuel Brown, of the Royal Navy, who, in January, 1808, had represented to the Naval Boards the policy of employing iron rigging and chain cable, and who, in February of that year, enrolled a patent for those articles, and in 1811 first employed chain cables in the vessel "Penelope," of which he was commander, for the purpose of experimental experience, this vessel of 400 tons having been fitted expressly for the trial by Captain Brown, Mr. Brunton, and other friends, at personal expense and risk, with iron rigging, chains, and cables, in place of hemp and rope.

He made a voyage in this ship from England to Martinique and Guadaloupe and home again, in the course of four months, having anchored many times in every variety of ground without any accident. He multiplied his trials, and acquired certain proofs that iron might be substituted for hemp in making cables, not only for mooring vessels, but for the standing rigging. Upon his return from the West Indies, Captain Brown strongly represented the advantages practically experienced of iron over hemp. A committee of naval officers reported upon the whole affair, and the Government ordered the "Namur" of 74 guns, the "Monmouth" of 64, the "Crescent" frigate, and the "Alonzo" sloop, to be fitted with two chain cables of 100 fathoms each, and Lieut. Brown was promoted to the rank of captain. These chains were of various forms of links; those, for instance, supplied to the "Crescent" were composed of very short links with parallel sides.

Since this period, chain cables have been universally introduced into all the ships of the Royal Navy, but the twisted links employed at first by Brown have been replaced by straight ones, stayed in the middle with a cross rod, the contrivance of Capt. Brown, which was secured by patent in this country.

The twisting of the links was done in order to assimilate the chain to the form of rope, and for the purpose of making it run out with less concussion to the ship; but this in practice was found really to let the cable render out too easily, and was discontinued in practice.

Some of the cables supplied in 1811 to the ships of war were found to have defective links; their general use was suspended until the beginning of 1812, when Captain Brown invented a mode of shutting the links with a long scarf, and introduced a machine to put upon the chain any amount of strain that ought to be brought to bear, and thus ascertain defects of workmanship and materials. This *proving machine* led to the introduction of stay pins in the links; about the middle of 1812, chain cables were thus brought to great perfection, and very generally introduced into the Royal Navy.

The first thing to be considered in the manufacture of iron cable is, to procure a

Digitized by Google

material of the best quality, and, in using it, always to keep in view the direction of the strain, in order to oppose the maximum strength of the iron to it. The best form of the links may be deduced from the following investigation.

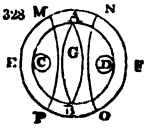

Let A B (*fig.* 328) be a circular link or ring, of one-inch rod iron, the outer circumference of the ring being 15 inches and the inner 9. If equal opposite forces be applied to the two points of the link C D, pulling C towards E, and D towards F, the result will be, when the forces are sufficiently intense, that the circular form of the link will be changed into another form with two round ends and two parallel sides, as seen in *fig.* 329. The ratio of the exterior to the interior periphery, which was originally as 15 to 9, or 5 to 3, is no longer the same in *fig.* 329. Hence there will be a derangement in the relative position of the component particles, and consequently their cohesion will be progressively impaired, and eventually destroyed. In *fig.* 328, the segment M N of the outside periphery being equal to 3 inches, the corresponding inside segment will be $\frac{3}{5}$ths of it. If this portion of the link, in consequence of the stretching force, comes to be extended into a straight line, as shown in *fig.* 329, the corresponding segments, interior and exterior, must both be reduced to an equal length. The matter contained in the 3 inches of the outside periphery must therefore be either compressed, that is, condensed into $1\frac{1}{5}$ inch; or the inside periphery, which is only $1\frac{1}{5}$ inch already, must be extended to 3 inches: that is to say, the exterior condensation and the interior expansion must take place in a reciprocal proportion. But, in every case, it is impossible to effect this contraction of one side of the rod and extension of the other, without disrupture of the link.

329

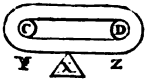

Let us imagine the outside periphery divided into an infinity of points, upon each of which, equal opposite forces act to straighten the curvature; they must undoubtedly occasion the rupture of the corresponding part of the internal periphery. This is not the sole injury which must result; others will occur, as we shall perceive in considering what passes in the portion of the link which surrounds C D (*fig.* 329) whose length is $4\frac{1}{2}$ inches outside and $2\frac{1}{10}$th inside. The segments M P and N O (*fig.* 328) are actually reduced to semi-circumferences, which are inside no more than half an inch, and outside as before. There is thus contraction in the interior with a quicker curvature or one of shorter radius in the exterior. The derangement of the particles takes place here in an order inverse to that of the preceding case, but it no less tends to diminish the strength of that portion of the link; whence we may certainly conclude that the circular form of cable links is an extremely faulty one.

Leaving matters as we have supposed in *fig.* 328, but suppose that G is a rod introduced into the link, hindering its two opposite points A B from approximating. This circumstance makes a remarkable change in the results. The link, pulled as above described, must assume the quadrilateral form shown in *fig.* 330. It offers more resistance to deformation than before; but as it may still suffer change of shape, it will lose strength in so doing, and cannot therefore be recommended for the construction of cables which are to be exposed to very severe strains.

330

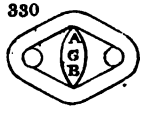

Supposing still the link to be circular, if the ends of the stay comprehended a larger portion of the internal periphery, so as to leave merely the space necessary for the plan of the next link, there can be no doubt of its opposing more effectively the change of form, and thus rendering the chain stronger. But, notwithstanding, the circular portions which remain between the points of application of the strain and the stay would tend always to be straightened, and of consequence to be destroyed. Besides, though we could construct circular links of sufficient strength to bear all strains, we ought still to reject them, because they would consume more materials than links of a more suitable form, as we shall presently see.

The effect of two opposite forces applied to the links of a chain is, as we have seen, to reduce to a straight line or a straight plane every curved part which is not stayed: whence it is obvious that twisted links, such as Brown first employed, even with a stay in their middle, must of necessity be straightened out, because there is no resistance in the direction opposed to the twist. A cable formed of twisted links, for a vessel of 400 tons, stretched 30 feet, when put to the trial strain, and drew back only 10 feet. This elongation of 20 feet proceeds evidently from the straightening of the twist in each link, which can take place only by impairing the strength of the cable.

Twisted cables are not now made, and but little of twisted chain. They were made to give the familiar form of rope to the chain, to please the sailors' prejudice.

From the preceding remarks, it appears that the strongest links are such as present, in their original form, straight portions between the points of tension; whence it is clear that links with parallel sides and round ends would be preferable to all others,

Digitized by Google

did not a good cable require to be able to resist a lateral force, as well as one in the direction of its length.

Let us suppose that by some accident the link *fig.* 329 should have its two extremities pulled towards Y and Z, whilst an obstacle X, placed right opposite to its middle, resisted the effort. The side of the link which touches X would be bent inwards; but if, as in *fig.* 331, there is a stay, A G B, the two sides would be bent at the same time; the link would notwithstanding assume a faulty shape.

331

In thus considering the vicious forms, we are naturally directed to that which has had at one time the preference, as is shown in *fig.* 332; but this form of link and stay-pin is so faulty, as to give place now to the general use of the simple link of parallel sides (see *fig.* 343) and with a very different stay-pin, as will be shown hereafter. This old link has a cast-iron stay with large ends; it presents in all directions a great resistance to every change of form; for let it be pulled in the direction *a b*, against an obstacle *c*, it is evident that the portions *d e* and *d f*, which are supported by the parts *g e* and *g f*, cannot get deformed or be broken without the whole link giving way. As the matter composing *g e* and *g f* cannot be shortened, or that which composes *d e* and *d f* be lengthened, these four sides will remain necessarily in their relative positions, by virtue of the large-ended stay *h*, whose profile is shown in *fig.* 333. We have examined the strength of a link in every direction, except that perpendicular to its plane. *Fig.* 334 represents the assemblage of three links in the above predicament; but we ought to observe that the link C, placed between the links A B, could not resist the pressure or impact of the two lateral links.

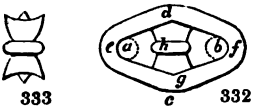

333 332

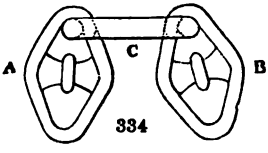

334

Process of manufacturing Iron Cables. — The implements and operations are arranged in the following order: —

1. The cutting, by a machine, of iron bars, in equal lengths, but with opposite bevels, to allow of the requisite crossing and splicing of the ends in the act of welding.

2. A reverberatory furnace (see IRON), in which a number of rods or round bars of the best possible wrought iron, and of proper dimensions, are heated to a red heat. The furnace is like those used in the sheet-iron works, but somewhat larger, and needs no particular description here.

3. The bending of each of these pieces by a machine, so as to form the links; the last operation is done rapidly while the iron is red-hot.

4. The welding of the links at small forge fires, fitted with tools for this express purpose, and the immediate introduction of the stay, by a top tool and hammer.

5. Proving the cables by an hydraulic press, worked by a pump, with levers to ascertain the strain applied by working the pump.

Any ordinary shears will do to cut the iron, if furnished with a gauge or stop, to regulate the length of link.

The following forms of apparatus employed by the late Mr. Brunton and others, relate more to the history of the past manufactures, than to the present practice on a large scale.

Figs. 335 and 336 are a plan and elevation of the shears with which rods are cut

335

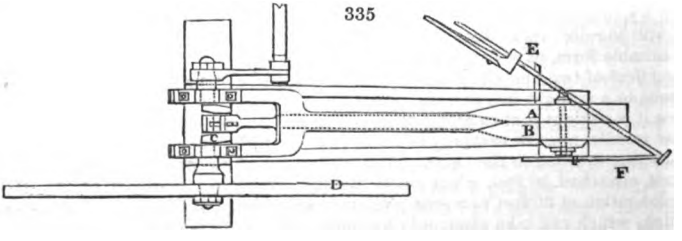

into equal pieces, for a link, moved by a steam engine, or worked by four or more labourers. These must be relieved, however, frequently by others, for each shears' machine is calculated to require nearly one horse in steam power.

A and B are the two cast-iron limbs of the shears. The first is fixed and the second

Digitized by Google

is movable by means of a crank shaft, C, driven by a heavy fly-wheel D. The cutting jaws, G, are of steel pieces made fast by bolts, and may be changed at pleasure. F is a stop which determines the equal lengths of the pieces cut off, and can be shifted to suit different lengths; a piece of iron is shown as being cut off between the upright stop and the shears.

336

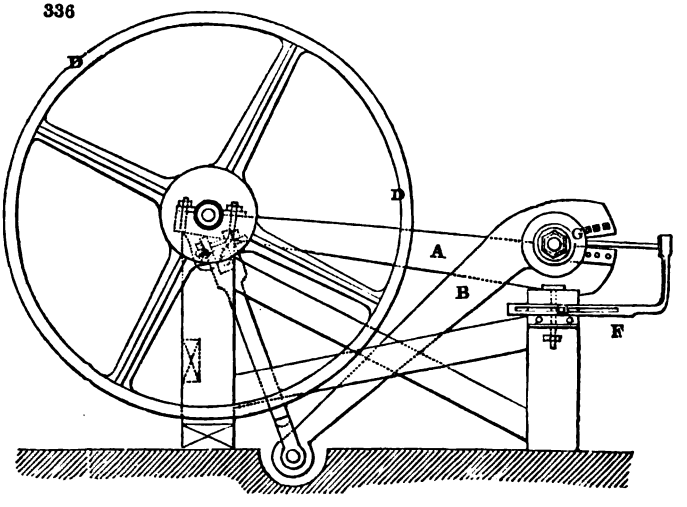

The following figures represent the plan and elevation of a machine for bending links into an elliptic form, superseded by the machine hereafter to be described. It is represented at the moment when a link is getting bent upon it.

337

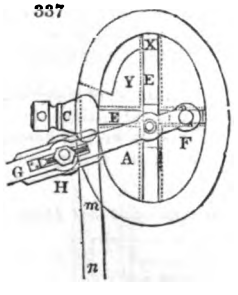

338

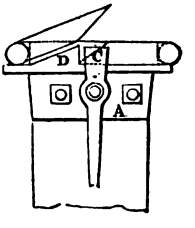

339

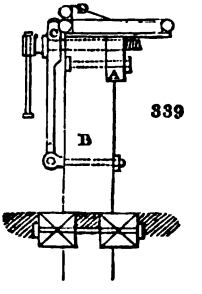

A is an elliptic mandrel of cast-iron; it is fixed upon the top of a wooden pillar B, solidly supported in the ground. C is the jaw of the vice, pressed by a square-headed screw against the mandrel A.

D, part of the mandrel comprehended between X and Y, formed as an inclined plane, so as to preserve an interval equal to the diameter of the rod between the two surfaces that are to be welded together.

E, rectangular slots (shears) passing through the centre of the nut of the mandrel, in which each of the pins F may be freely slidden.

G, horizontal lever of wrought iron six feet long. It carries at H a pulley or friction-roller of steel, whose position may be altered according to the diameter of the links. It is obvious that as many mandrels are required as there are sizes and shapes of links.

The piece of iron intended to form a link being cut, is carried, while red hot, to the bending machine, where it is seized with the jaw of the vice C, by one of its ends, the slant of the cut being turned upwards; this piece of iron has now the horizontal direction *m n*; on pushing the lever G in the line of the arrow, the roller H will force *m n* to be applied successively in the elliptic groove of the mandrel; thus finally the two faces that are to be welded together will be placed right opposite each other.

Digitized by Google

The length of the small diameter of the ellipse ought to exceed by a little the length of the stay-piece, to allow of this being readily introduced. The difference between the points F E is equal to the difference of the *radii vectores* of the ellipse. Hence it will be always easy to find the excentricity of the ellipse.

Fig. 340 is a lever press for squeezing the old form of links upon their stays,

340

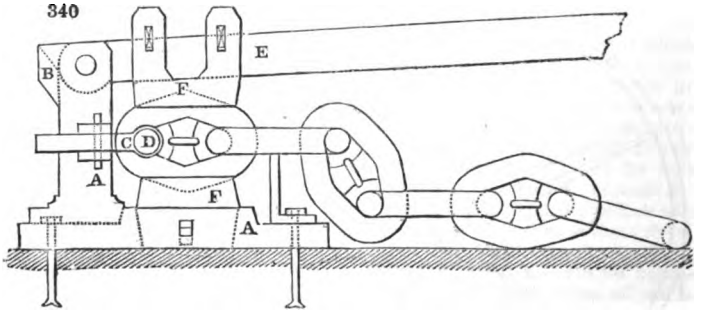

after the links are welded. This machine was contrived for the purpose of superseding manual labour, but the skill and dexterity of the workmen have quite superseded this machinery; however completely this and other machines may do the work, hand labour does the work quicker and better, almost beyond comparison. The hand practice is as follows:—

The links bent are carried to the forge hearth to be welded, and to receive their stay; two operations performed at one heating. Whenever the welding is finished, while the iron is still red hot, the link is placed upright upon the stake, *i. e.*, the shorter axis vertical and the longer axis of the link horizontal; then a workman introduces the stay with a pair of tongs or pincers, while another workman strikes down upon it. This mechanical compression first of all joins perfectly the sides of the link against the concave ends of the stay, and afterwards the retraction of the iron on cooling increases still more this compression. If each link be made with the same care, the cable must be sound throughout. It is not delivered for use, however, till it be proved by the hydraulic press, at a draw-bench made on purpose, and examined link by link, on the side of the machine, or on a bench erected for the purpose, to detect any flaw the strain may have caused.

The following Table of compared materials and strains is given as a matter of historical reference; it is believed the dates of the experiments are 1815 and 1816; since then, alterations in the make of iron, and the introduction of new fibres, as well as hemp, render this Table of value, as the materials here employed were, no doubt, good examples, and subjected to critical attention.

Table of Iron Cables as substituted for Hemp, with the Strains applied at that Date.

Iron Cables. Diameter of Iron Rod.	Hemp Cables. Circumference of Rope.	Old Proof, by Mr. Brunton.
Inches.	Inches.	Tons.
$0\frac{7}{8}$	9	12
1	10	18
$1\frac{1}{8}$	11	26
$1\frac{1}{4}$	12	32
$1\frac{5}{16}$	13	35
$1\frac{3}{8}$	14 to 15	38
$1\frac{1}{2}$	16	44
$1\frac{5}{8}$	17	52
$1\frac{3}{4}$	18	60
$1\frac{7}{8}$	20	70
2	22 to 24	80

It would be imprudent to put hemp cables to severer strains than those indicated in the Lloyd's Table, drawn up from experiments; but the iron cables of the above sizes will support a double strain without breaking. They ought never, in common cases,

Digitized by Google

however, to be exposed to a greater stress. A cable destined for ships of a certain tonnage should not be employed in those of greater burden. Thus treated, it may be always trusted to do its duty, and will last longer than the ship to which it belongs. It has often been stated, that chain cables possess double the strength of the iron of which they are made, owing to the *forms* of the links employed: this, however, is an absurd error; for suppose the two sides of a link to be of inch iron, yet a part of the strength must be lost in the bending of the ends, for the straining force is at right angles, at the ends, to what it is at the side, or would be exerted upon portions of straight rods; next, to make a link, the two ends have to be joined by welding, and wherever this join is made, there is every chance for less union, and no possible means of getting the fibre to be stronger than if they had never been separated, strength really must be lost by heating the iron and shaping the link.

Mr. Lenox has found in practice, that an inch bolt will bear 21½ tons, while the inch cable will break at 34 tons, and not at the double strength, or 43 tons, of two lengths of straight iron.

One of the most valuable qualities of iron cables is their resisting lateral as well as longitudinal strains, as explained under *figs.* 332 and 334.

Vessels furnished with chain cables have been saved by them from the most imminent peril. The "Henry," sent out with army stores during the peninsular war, was caught on the northern coast of Spain in a furious storm. She ran for shelter into the Bay of Biscay among the rocks, where she was exposed for three days to the hurricane. She possessed fortunately 70 fathoms chain cables, which held good all the time, but it was found afterwards to have had the links of its lower portion polished bright by attrition against the rocky bottom. A hemp cable would have been speedily worn to pieces in such a predicament.

In the contracts for the Admiralty of chain cables for the British Navy, it is stipulated that "the iron shall have been manufactured in the best manner from pig iron smelted from ironstone only, and selected of the best quality for the purpose, and shall not have received in any process whatever, subsequent to the smelting, the admixture of either cinders or oxides produced in the manufacture of iron, and shall also have been puddled in the best manner upon iron bottoms, and at least three times sufficiently drawn out at three distinct welding heats, and at least twice properly fagotted."

The following is a Table of the breaking proof of chain cables, and of the iron for the purpose of making them, and the proofs required by Her Majesty's Navy for chains:—

Size of Bolt.	Proof of Bolt.		Proof of Chain.		Navy Proof of Chain.
Inches.	Tons.	cwts.	Tons.	cwts.	Tons.
½	5	7	8	11	4½
⅝	8	7	13	4	5½
¾	12	1	19	5	10⅞
⅞	16	4	26	5	13¾
1	21	8	34	5	18
1⅛	27	2	48	15	22½
1¼	33	10	53	11	28½
1⅜	40	10	65	0	34
1½	48	4	77	0	40½
1⅝	56	11	90	10	47⅛
1¾	65	12	105	0	55½
1⅞	75	6	120	10	63¼
2	85	14	137	0	72
2¼	96	15	155	0	81¼

In these iron cables, the matter in the link is thrown very much into one plane; the link being of an oval form, and provided with a stay. As there are emergencies in which the cable must be severed, this is accomplished in those of iron by means of a bolt and sheckle (shackle), which is inserted in the Royal Navy cables at the end of every 12½ fathoms, and at the end of every 15 fathoms in the merchant service; so that by striking out this bolt or pin, this cable is parted with more ease than a hempen one can be cut. And the iron cable can be reconnected when the ship is clear, while with the hempen cable it would be necessary to cut it with an axe, and thus permanently injure the cable. Mr. Lenox's plan for securing these bolts is now made part of the Government contracts.

We have avoided all relating to the general history and application of chain cables,

Digitized by Google

but in connection with the following particulars, obtained from Brown, Lenox, and Co.'s chain works at Millwall, we must admit the important part performed by this house in the improvement of this manufacture. The following remarks refer to chain cables for the Royal Navy, messenger and mooring chains for the Trinity Corporation, and ship cables for merchant service, showing the practice in 1858.

After selecting the best iron, cutting it off into required lengths, and heating it as before described, the links for chain cables may be bended at the rate of about 60 per minute, by machinery at Lenox's works in Wales, worked by water power,—the welding of the links in all cases being effected by hand labour.

In the practice with the *new bending machine* at Newbridge Works, Pont-y-Prid Glamorganshire, it as follows:—When the iron is cut to the requisite length for links, from 20 to 60 pieces, according to size, are put into the furnace, and when heated, are placed separately on the bending mandrel G (*fig.* 341) the machine is set in motion, and one revolution forms a link, which is pinched off the mandrel by a small crowbar, and another piece of iron applied, and so on, until from 40 to 60 links are formed in a minute.

The bending machine is connected with a water-wheel, or other power, by an ordinary coupling clutch, or box, which a lever throws into and out of gear at pleasure.

There is a stub or knob of iron on the mandrel under which the point of the piece of iron to be bent is fixed; the mandrel being oval, or of the inside shape of the link, when turned, is followed by the roller above, and this, pressing upon the piece of iron, forms it to the shape of the mandrel.

A B C (*fig.* 341) are standards, D connecting rod, E crank for lifting, F F the roller for

341

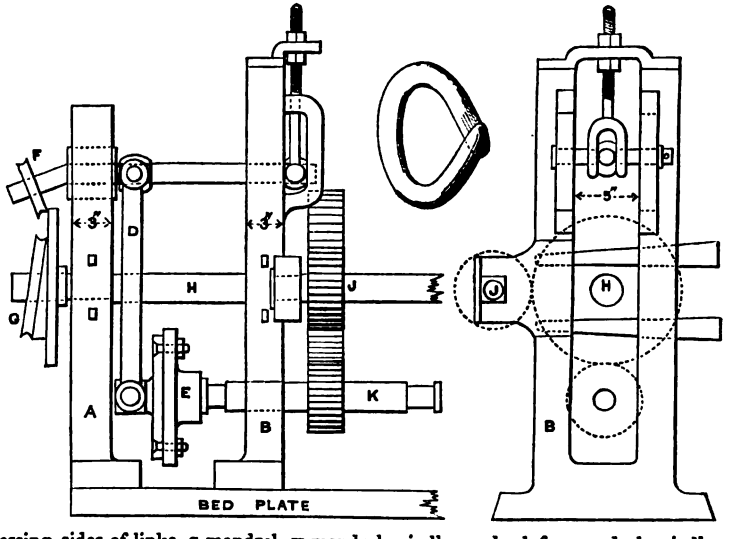

pressing sides of links, G mandrel, H mandrel spindle, I wheel for mandrel spindle, J pinion on main spindle, K crank spindle.

The form of the link, after being bended into shape (*fig.* 341) is shown with the two slant-cut surfaces of the ends to be welded together and hammered into form.

For short lengths of chain the bending may be effected by hand; in this case the process is simple:— A sufficient length of the best iron is cut off, and, while hot, is partially bent by the workman over an iron ring, one end of the bar resting on the ground; the bend is finished upon the anvil; one entire end of the link is thus formed. The two slanting cut ends are made to approach each other; heated up to a high temperature, the expert workman, by a peculiar blow, detaches the scale of oxide, and instantly presses both surfaces together; two men then by repeated blows effect the welding junction, and thus the link is formed.

The shape of the link, after due consideration of the advantages of particular patterns, seems to resolve itself into the decided preference for a link of parallel sides, unchanged in form from the round of the iron employed, while the ends may be reduced, somewhat flattened, and increased in breadth. The links thus in contact

Digitized by Google

have the pressure sustained by a greater breadth of surface, and compression can scarcely alter the form.

The length of a good link may be of round iron 6 diameters in length of link. (See *fig.* 343.) A *a* and from B to *b* 3·7 to 4 diameters of the iron rod employed, and 1·7 to 2 diameters inside.

The stud, staple, or cross-bit is of cast iron, and is placed across; its use is to prevent the sides from collapsing by extension of the chain; in fact, to keep up a succession of joints, and prevent the chain from becoming a rigid bar of metal.

The stud or cross-piece shown at C is of cast iron, with dates and marks upon the surface. It is cast with a hollow bearing, having a curve to receive the round iron of the link; its shoulders, or feathering, enables the workman to insert it readily, and a few blows upon the yielding iron give the requisite grip, and all proper service only tends more firmly to keep it in position, very different indeed to the form *fig.* 333, which would positively injure the link.

In all cases this cross-piece has been of cast iron. Wrought iron was tried, but found to be too expensive. Malleable iron has been patented, but it is a question whether it can supersede common foundry iron, from the cheapness and facility of the latter.

The cables are proved and tested by regulated strains brought to bear continuously up to the *proof strain*, and then even up to the ultimate destruction of some of the links, if the final strength or opposition to resistance is required to be known. The proof of cable should be 600 lbs. for each circle of iron $\frac{1}{8}$th of an inch in diameter.

The chain is attached at one end horizontally to a hydraulic press, the other end to the enormous head of a bent iron lever, whose power is multiplied by second and third iron levers, all working upon knife edges, and to the last lever a scale-pan is attached; 1 lb. being here placed is equivalent to a strain of 2240 lbs. upon the bar or chain that is being tested. This machine of Brown, Lenox, and Co., Millwall, is more powerful than that used in the Royal dockyard. The proving machine, invented by Captain Brown in 1813, was a great step towards the production of confidence.

In practice *length* after *length* is tried up to the proof required; when the tension is to be exerted to the utmost, a few links are taken: in such experiments it is usual for one link alone to give way, and the strength of the cable itself is uninjured by testing to find its ultimate strength.

Perfection of practice is found when the link and the stay yield together; in the largest chain cables ever produced, such were the due proportions and symmetry of form affording equality of resistance, that the cross-piece split or broke at the time the link fractured and opened.

To measure these chains, or be near them when under such tension, is not without danger. The cable, on being struck, rings out with strange shrill sound, a link may suddenly snap, the chain lashes about, and the fragments fly to a great distance, penetrating the factory roof at times, and, at the moment of fracture, the link becomes very hot.

The cables are usually told off into lengths. The Government length is 12½ fathoms; for the merchant service the length is 15 fathoms; as explained, these lengths are united by shackles. In the merchant service cables, larger links are placed at each extremity for the anchor shackle to pass through; but in the Royal Navy cables, each *length* is alike provided with large links; thus, then, at any time, any end of any length may be placed to the anchor stock. See *figs.* 342, 343.

342

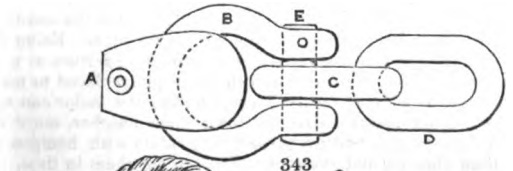

343

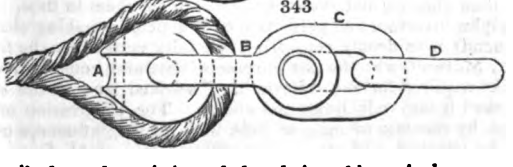

To obviate evils from the twisting of the chain cable, swivels are inserted: in the Government cables, a swivel is inserted in the middle of every other length; for the

Digitized by Google

merchant service there does not appear to be any precise rule. Sometimes one, two, or more swivels may be in 100 fathoms; and in cheap chains, bought and judged by weight and figures, no swivel whatever exists in the cable.

The effect of such twisting, or torsion, is to form a kink, and give powerful lateral pressure upon the link; the stud or cross-piece is forced out, and the link itself may yield at the moment at any flaw or imperfection of welding.

The mooring swivel is that by which a ship can ride with two anchors down at the same time, and two bridles on board the ship. The mooring swivel, being equal in strength to the two cables, is over the bow, and enables the ship to swivel round her anchors without fouling hawse; in any direction the ship can swing round this swivel or point, leaving her anchors undisturbed, whereas by two cables out, without this, she would require great care to prevent them from fouling, and even being lost. This is an essential advantage of chain over hemp.

The splicing shackle is to unite or splice a hempen cable to be used on board ship, attached to the chain cable, which lies on the ground or bottom, so that the vessel rides lightly at her anchor, while the iron chain cable preserves the hempen cable from being destroyed by the rocky bottom, and the ship has the light hemp cable rendered buoyant by the water, which lifts portions of the chain cable by the motions of the vessel; and thus, the ship is relieved from weight and the anchor from jerks.

The splicing shackle, on the Hon. George Elliott's plan, is shown above (*fig.* 343). The rope is served round an iron thimble A, on the shackle B, with end links, and enlarged links without stay-pins C D, leading to the anchor, while the hempen cable A goes to the ship.

In the Royal Navy 4 cables are employed to moor the ships, two being end to end.

When ships lay long on certain shores, the pin or fastening often gets loose by the constant tapping and vibrations of the chain cable on the rocky or shingly bottom. Men-of-war at some stations suffered severely in this way, and the commander at Malta had reason to represent it as a very serious matter. Mr. Lenox's plan for securing the bolts and pins is now made a point of contract to be adopted in all fastenings for the Royal Navy.

Simple as it would seem to devise a plan, yet it was years before all the difficulties could be surmounted. This arrangement may be understood by reference to the figure of a shackle with links, (*fig.* 344): at E is seen the aperture at right angles to the bolt F, (of oval iron) through this channel, cut through the shackle and the bolt, a tapering but not quite cylindrical steel pin, fits exactly; but does not quite proceed through the iron; it is shown at *g g*. Various plans used to be resorted to before this final preference; for the steel pins, of whatever form, got loose by repeated tapping on the rocky bottom, or the links upon each other. Mr. Lenox succeeded in cutting the cavity at E of the form of a hollow cone, and to complete the fastening, a pellet or cylinder of lead that will just allow insertion at E is driven, and then by repeated blows the lead is made to fill up the cavity, the superfluous quantity of lead being cut off by the hammer at E. To release the bolt it is only necessary to find the small space at the small end of the steel pin, to insert a punch, and then, with a few blows, the steel pin *g g* is driven out of its conical bearing, and its flat top and cutting edges enable it to emerge again at E. Being forced out, the bolt F is taken out, and the chain severed if required; the aperture at E can be cleared of its lead by a proper cutting-out tool, and the steel pin replaced to make all fast.

344

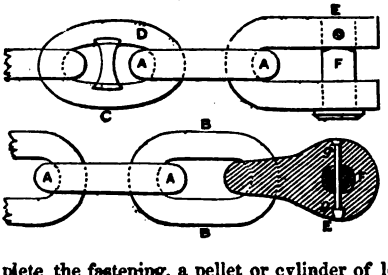

This operation can be effected on the darkest night; the sailor can sever the chain cable, and thus when one vessel is driving down upon another, more chain may be attached or the cable severed, and no harm done; while with hempen cable it might be found more than difficult, and even impossible, to cut them in time.

All the principles involved, and perfection of practice, in making chains and chain cables, have recently been deeply considered and fully verified by the firm of Brown, Lenox, and Co., Millwall, who, for the purpose of obtaining comparative results up to the greatest links required for the "Leviathan," selected iron of the same identical quality and worked it into rods, links, and chains. The progression of resistance to increased strains, by increase of mass of iron, with all the influences of variation of make, flaws in the material, and other circumstances inseparable from practice, were thus matters of critical experiment.

Commencing with 1 inch chain, and trying 4 links of small chains up to 2⅞ths, being

Digitized by Google

the largest diameter of round iron for the greatest cable links ever hitherto made, being those for the sheet anchor of the "Leviathan," taking the breaking strains, and reducing all the links to the proportion borne upon a circle $\frac{1}{8}$th of an inch in diameter, the minimum breaking force was 796·25 lbs., and the maximum 1052·8 lbs.

Sometimes the fracture was found to be dependent upon flaws, sometimes from over heating, or unequal heating, and other practical causes; but the whole series of experiments was important and interesting.

The iron *lengthens* to the intense strains employed, long before fracture. The comparison of actual extension, while under enormous force at ordinary temperatures, was ascertained by the following impressive experiments:—

The "Leviathan" second size cable of $2\frac{3}{4}$ths diameter of iron employed in the links. Three links measured $35\frac{1}{4}$ inches by strain of 10 tons (of course it requires power to extend them fairly).

	At 50 tons	stretched $\frac{1}{4}$ of an inch.	
	„ 85 „	„ $\frac{1}{16}$	„
	„ 110 „	„ $\frac{1}{8}$	„
(Proof)	„ 124 „	„ $\frac{1}{8}$	„
	„ 140 „	„ $2\frac{7}{16}$	„
	„ 150 „	„ $3\frac{1}{8}$	„
	„ 160 „	„ $3\frac{1}{4}$	„
	„ 170 „	„ $3\frac{3}{4}$	„
And broke	„ 180 „		

A few links of the best bower anchor cable of the "Leviathan" taken, proved, and destroyed.

Three links measured at 15 tons 39 inches.

	At 75 tons	stretched $\frac{1}{8}$ of an inch.	
	„ 125 „	„ $1\frac{5}{8}$	„
(Proof)	„ $148\frac{3}{4}$ „	„ $2\frac{1}{2}$	„
	„ 160 „	„ 3	„
	„ 170 „	„ $3\frac{1}{2}$	„
	„ 180 „	„ $4\frac{3}{8}$	„
	„ 190 „	„ $4\frac{3}{4}$	„
	„ 200 „	„ $5\frac{1}{2}$	„
It bore	„ 217 „		
And broke	„ 218 „		

Table showing the Principal Dimensions of the Common Links, Weights, and Scale of Proof for Chain Cables to be supplied to Her Majesty's Navy.

Common Links.			Weight of 100 Fathoms of Cable in 8 Lengths, including 8 joining Shackles and 4 Swivels, not to be exceeded by more than $\frac{1}{20}$.			Weights by which to be proved equal to 630 lbs. per Circular $\frac{1}{8}$ of Inch.
Diameter of Iron of Common Links.	Mean Length, 6 Diameters of Iron, not to vary more than $\frac{1}{10}$ of a Diameter.	Mean Width of Links, 3·6 Diameters.				
Inches.	Inches.	Inches.	Cwts.	qrs.	lbs.	Tons.
$2\frac{1}{4}$	$13\frac{1}{2}$	8·1	243	0	0	$91\frac{1}{8}$
$2\frac{1}{8}$	$12\frac{3}{4}$	7·65	216	3	0	$81\frac{1}{4}$
2	12	7·2	192	0	0	72
$1\frac{7}{8}$	$11\frac{1}{4}$	6·75	168	3	0	$63\frac{1}{4}$
$1\frac{3}{4}$	$10\frac{1}{2}$	6·3	147	0	0	$55\frac{1}{8}$
$1\frac{5}{8}$	$9\frac{3}{4}$	5·85	126	3	0	$47\frac{1}{4}$
$1\frac{1}{2}$	9	5·4	108	0	0	$40\frac{1}{2}$
$1\frac{3}{8}$	$8\frac{1}{4}$	4·95	90	3	0	34
$1\frac{1}{4}$	$7\frac{1}{2}$	4·5	75	0	0	$28\frac{1}{2}$
$1\frac{1}{8}$	$6\frac{3}{4}$	4·05	60	3	0	$22\frac{3}{4}$
1	6	3·60	48	0	0	18
$\frac{7}{8}$	$5\frac{1}{4}$	3·15	36	3	0	$13\frac{3}{4}$
$\frac{3}{4}$	$4\frac{1}{2}$	2·7	27	0	0	$10\frac{1}{8}$
$\frac{11}{16}$	$4\frac{1}{8}$	2·475	22	2	21	$8\frac{1}{4}$
$\frac{5}{8}$	$3\frac{3}{4}$	2·25	18	3	0	7
$\frac{9}{16}$	$3\frac{3}{8}$	2·025	15	0	21	$5\frac{1}{8}$
$\frac{1}{2}$	3	1·8	12	0	0	$4\frac{1}{2}$
$\frac{7}{16}$	$2\frac{5}{8}$	1·575	9	0	21	$3\frac{1}{8}$

Digitized by Google

As the merchant marine may frequently be called upon for public service, it may be useful to know the particulars, which are promulgated from Lloyd's. A chain cable seldom breaks with the duty assigned, if proportioned to the tonnage, if the iron be sound and the workmanship good.

Weights of Ordinary Anchors, Sizes and Lengths of Chain Cables, and Sizes and Lengths of Hawsers and Warps, to be recommended when the Surveyors are applied to by Ship Builders and Ship Owners.

Ship's Tonnage.	Anchors. Number. Bowers.	Stream.	Kedges.	Weight. Bowers. Wood Stock.	Bowers. Iron Stock.	Stream.	Kedge.	2nd Kedge.	Chains. Size.	Length.	Hawsers and Warps. *Stream.	Hawser.	Warp.	Length.
Tons.				Cwts.	Cwts.	Cwts.	Cwts.	Cwts.	Inch.	Fathms.	Inch.	Inch.	Inch.	
50	2	1	1	3	4	1¼	—	—	11/16	120	5	3	—	The Length of them to be 90 fathoms each.
75	2	1	1	4	5	1¾	—	—	11/16	120	5	3	—	
100	2	1	1	5	7	2½	1¼	—	11/16	150	5½	3	—	
150	2	1	1	8	10	3½	1¾	—	1	180	6	4	—	
200	3	1	1	10	12	4¼	2¼	—	1	180	6½	4	—	
250	3	1	2	13	15	5	2½	—	1⅛	200	7	5	—	
300	3	1	2	15	17	6	3	—	1¼	200	7½	5½	—	
350	3	1	2	17	20	6½	3¼	—	1⅜	240	7½	5½	—	
400	3	1	2	19	22	7½	3¾	—	1⅜	240	8	6	—	
500	3	1	2	23	26	9	4½	—	1½	270	9	7	—	
600	3	1	2	26	30	10	5	2½	1⅝	270	9½	7	4	
700	3	1	2	29	34	11	5½	2¾	1⅝	300	10	8	5	
800	3	1	2	31	36	12	6	3	1¾	300	10	8	5	
900	3	1	2	33	39	12	6½	3¼	1¾	300	10	9	5½	
1000	3	1	2	35	41	12	6¾	3½	1⅞	300	10	9	5½	
1100	3	1	2	37	44	12	7	3½	1⅞	300	10	9½	6	
1200	3	1	2	39	46	12	7½	3¾	1⅞	300	10	9½	6	
1400	3	1	2	41	48	12	7¾	4	2	300	10	10	6	
1600	3	1	2	43	50	14	8¼	4	2	300	11	10½	6½	
1800	3	1	2	45	52	14	8½	4¼	2⅛	300	11	11	7	
2000	4	1	2	47	54	14	9	4½	2⅛	300	11	11	7	

See Coir, Hemp, Wire Rope.

CACAO (*commonly, but improperly* Cocoa). The seeds of the *Theobroma Cacao* (or Food of the Gods, as Linnæus named the tree). They are imported from the West Indies, the Caracas, from Brazil and some other parts of America. The seeds are oval, large as an olive, obtuse at each end. Simply torrified and bruised they constitute the Cocoa of the shops, but frequently this is made from the fragments of the seed-coats, which impart to the preparation an astringent property. When the carefully prepared seeds are ground into a paste, sweetened, and flavoured with vanilla or cinnamon, it constitutes Chocolate (*chocolata*), which furnishes a nourishing beverage. Humboldt estimated that the consumption of cacao in Europe was 23,000,000 lbs. per annum. Our importations of cacao were in 1831, 3,483,118 lbs.; in 1835, 2,088,952 lbs.; and in 1863 9,592,965 lbs. and 1864 7,920,712 lbs.—See Chocolate.

CACHALOT. A name for the sperm whale.

CADMIUM is a metal discovered by Stromeyer about the beginning of the year 1818. It derives the name *Cadmium* from *Cadmia fossilis*—a denomination by which the common ores of zinc were formerly distinguished. It occurs chiefly in Silesia in several ores of zinc, and may be readily recognised by means of the blowpipe; for, at the first impression of the reducing or smoky part of the flame, the ores containing cadmium stain the charcoal all round them with a reddish-yellow circle of oxide of cadmium. The Silesian native oxide of zinc contains from 1½ to 11 per cent. of cadmium. The only native compound of cadmium is the *sulphide* called Greenockite (*which see*).

Cadmium may be extracted by dissolving the ores containing it in sulphuric acid, leaving the solution acidulous, and diluting it with water, then transmitting through it a stream of sulphuretted hydrogen, till the yellow precipitate ceases to fall. The powder, which is sulphide of cadmium, is to be dissolved in concentrated muriatic acid, the excess of which is to be expelled by evaporation; and the salt being dis-

* The stream cables may be of iron, of proportionate sizes.

Digitized by Google

solved in water, carbonate of ammonia is added in excess; cadmium separates as a carbonate, while the adhering copper or zinc is retained in solution by the ammonia. Herapath has shown that, in distilling zinc *per descensum* (see ZINC), the first portions of gaseous metal which are disengaged burn with a brown flame and deposit the brown oxide of cadmium.

Cadmium has the colour and lustre of tin, and is susceptible of a fine polish. Its fracture is fibrous; it crystallises readily in regular octahedrons; and when it suddenly solidifies, its surface gets covered with fine mossy vegetations. It is soft, easily bent, filed and cut, soils like lead any surface rubbed with it. It is harder and more tenacious than tin, and emits a creaking sound when bent, like that metal. It is very ductile, and may be drawn out in fine wire, and hammered into thin leaves, without cracking at the edges. Its specific gravity, after being merely melted, is 8·604; and 8·6944 after it has been hammered. It is very fusible, melting at a heat much under redness; indeed, at a temperature little exceeding that of boiling mercury, it boils and distils over in drops. Its vapours have no smell. It is but slightly altered by exposure to air. When heated in the atmosphere, it readily takes fire and burns with a brownish-yellow smoke, which is destitute of smell. In strong acids it dissolves with disengagement of hydrogen, and forms colourless solutions. Chromate of potash causes no precipitate in them, unless zinc or lead be present.

There are two oxides of cadmium, CdO, or Cd^2O. Its specific gravity is 8·183. It is neither fusible nor volatile at a very high temperature. When in the state of a hydrate, it is white. This oxide of cadmium consists of 87·45 parts of metal, and 12·55 oxygen, in 100 parts. Berzelius states its atomic weight to be 55·833 (55·74 is the equivalent now usually adopted). The other or *suboxide of cadmium*, Cd^1O, is obtained by heating the oxalate of cadmium to about the melting point of lead. It is a green powder resembling oxide of chromium.

CADMIUM, ALLOYS OF. One hundred parts of copper at a red heat combine with eighty-two parts of cadmium. This alloy is of a yellowish white colour. Platinum at a red heat will take up 117 parts of cadmium. This alloy is silver white, very brittle, and refractory in the fire. With mercury, cadmium forms a hard, brittle, white amalgam. These alloys have no commercial value or manufacturing interest.

CADMIUM, SALTS OF. Bromide, chloride, iodide, and sulphate of cadmium have been prepared and examined, but with the exception of the use of the bromide and iodide in photography, none of these salts are of any importance in the arts. The sulphate has been applied to the eyes by surgeons to remove specs on the cornea. —See Watts' "Dictionary of Chemistry."

CADMIUM SULPHIDE or CADMIUM YELLOW. The artificial sulphide of cadmium is prepared by fusing cadmium with sulphur, by igniting cadmic oxide with sulphur, or it is precipitated in yellow flakes when sulphuretted hydrogen or an alkaline hydrosulphate is brought in contact with a cadmium salt. This forms the pigment cadmium yellow, or *jaune brilliant*. See GREENOCKITE.

CÆSIUM. One of the new metals discovered by the aid of spectrum analysis in 1860 by Kirchoff and Bunsen (see SPECTRUM ANALYSIS). It has not been found except in company with RUBIDIUM. Its name is derived from *cæsius*, sky blue, which colour it imparts to flame, and when its radiations are decomposed by a prism, it gives two blue lines, one rather faint in the middle of the blue space of the ordinary solar spectrum, and the other much brighter situated towards the violet end.

Cæsium was first detected in the mineral water of Dürkheim, ten kilogrammes (about two pounds and a quarter) of which contained not quite two milligrammes (0·015 grains). It has since been detected in the waters of Kreuznach and in the lepidolite of Rozena. The most abundant source of cæsium is however the lepidolite of Hebron in Maine, United States. It has also been found in the mineral waters of Baden-Baden, Bourbonne-les-Bains, Haute-Marne, in the salines of Aussee and in the lithium-mica of Zinnwald.

Pure metallic cæsium has not yet been obtained, but an amalgam of cæsium can be procured by electrolysing a solution of chloride of cæsium, using mercury as the negative pole. For the salts of cæsium see Watts' "Dictionary of Chemistry."

CAFFEINE. ($C^8H^5N^2O^2$.) A weak alkaloid discovered in coffee, remarkable for containing azote. It is white, crystallisable in silky needles, fusible, volatile, and soluble in water, alcohol, and ether. It is identical with *Theine* and with *Guaranin*.

According to Robiquet, the proportion of caffeine in 1000 of coffee is as follows:—Martinique 6·4, Alexandrian 4·4, Java 4·4, Mocha 4, Cayenne 3·8, St. Domingo 3·2. It is probable that 0·64 per cent. is an ordinary proportion. According to Liebig, the proportions are per lb.—Martinique 32 gr., Alexandrian 22, Java 22, Mocha 20, Cayenne 19, St. Domingo 16. H. J. Versman of Lubeck mixes 10 lbs. of bruised raw coffee with 2 of caustic lime, made previously into hydrate; treats the mixture in a displacement apparatus with alcohol of 80° till the fluid which passes through no

Digitized by Google

longer furnishes evidence of the presence of caffeine. The coffee is then roughly ground and brought nearly to the state of a powder, and the refuse of the once digested mixture from the displacement apparatus, dried and ground again, and mixed with hydrate of lime, is once more macerated. The grinding is more easily effected after the coffee has been subjected to the operation of alcohol, having lost its horny quality, and the caffeine is thus more certainly extracted. The clear alcoholic liquid thus obtained is then to be distilled, and the refuse in the retort to be washed with warm water to separate the oil. The fluid is now evaporated into a crystalline mass, filtered, and expressed. The impure caffeine is freed from oil by pressure between folds of blotting-paper, purified by solution in water with animal charcoal, and is thus obtained in shining white silky crystals. See THEINE.

CAFFEONE. The aromatic principle of coffee is so called. It is a brown oil, heavier than water and slightly soluble in that fluid when boiling. It is prepared by distilling coffee with water, agitating the distillate with ether, and evaporating the ether. Considerably less than a grain will flavour a pint or two of water.

CAHOUN NUTS. The fruits of *Attalea funifera*, the *Attalea cohune* of Martius. The tree producing those nuts is a plume-like palm, a native of Honduras. The nuts grow in clusters like bunches of grapes. An oil is extracted from these nuts by expression equal to that of the cocoa-nut. See COCOA-NUT.

CAÏNE. The Brazilian name for the American oil-palm, *Elæis melanococca*. Of its very long leaves the Brazilians make ropes, and its expressed oil is much used by them. See ELÆIS and PALM OIL.

CAIRNGORUM, or CAIRNGORM, is the name generally applied to the more pellucid and paler coloured varieties of smoky quartz, with a tint resembling that of sherry or amber. It is so called from the district Cairngorum, or the "Blue Mountain," in the south-west of Banff, where these crystals are frequently found. When of a good colour, this crystal is made into ornaments, and used for jewellery; indeed, so great a favourite is the Cairngorum with the people of Scotland, that brooches, pins, bracelets, and a variety of ornaments, are made with this stone, for use by all classes.

CAJUPUT OIL is obtained from the leaves of the tree called *Melaleuca minor*, which grows upon the mountains of Amboyna, and in other of the Molucca islands. It is procured by distillation of the dried leaves with water, is prepared in great quantities in the island of Banda, and sent to Holland in copper flasks: hence, as it comes to us, it has a green colour.—*Ure*. M. Guibort appears to have detected copper in several samples of cajuput oil. Pereira says, "All the samples of the oil which I have examined, though green, were quite devoid of copper;" and Mr. Brande observes, that none of the samples which he has examined have contained even a trace of copper. It is very limpid, lighter than water, of a strong smell resembling camphor, and pungent taste like cardamoms. In 1831, oil of cajuput was greatly extolled as a remedy for cholera; and to meet the sudden and large demand, various adulterations and imitations were introduced. One of these consisted of oil of rosemary, flavoured with cardamoms or oil of cardamoms, and coloured. According to Blanchet, the composition of oil of cajuput ($C^{10}H^{9}O$) is carbon 77·92, hydrogen 11·69, oxygen 10·39. It is used in medicine as a stimulant. See OILS, ETHEREOUS.

CAKING COAL. A coal which fuses together when heated. All the caking coals are bituminous and usually make good coke. See COAL.

CAL or KAL, sometimes CALLEN. A miner's term for an iron ochre, especially in St. Just in Cornwall.

CALABAR BEAN. See ORDEAL BEAN.

CALABASHES. The pericarp of the fruit of the Calabash tree, one of the *Bignoniaceæ* (*Crescentia cujete.*) It is a native of the tropical regions of America, and produces a melon-like fruit containing a slightly acid pulp, which is sometimes eaten. After the removal of the pulp the pericarp is used for cups, bottles, baskets, &c.

CALAITE. TURQUOIS (*which see*).

CALAMANCO. A sort of woollen stuff of a shining appearance, chequered in the warp, so that the checks are seen only upon one side.

CALAMANDER. A wood, the produce of Ceylon. See COROMANDEL.

CALAMINE. A native carbonate of zinc. (See ZINC.) The term *Calamine*, or *Lapis calaminaris*, has been applied to this ore of zinc since the days of the Arabian alchemysts. It is so used now by Brook and Miller, by Greg and Lettsom, and others; yet we find Dana defining calamine to be the *hydrous silicate of zinc*,—another example of the sad want of agreement among mineralogists. See ZINC ORES.

CALAMUS (κάλαμος, *a reed*). A genus of plants belonging to the palm tribe. The *C. Rotang* and *C. Scipionum* are mentioned as two species which produce the Rattan canes of commerce. See RATTAN. The Dragon's Blood of commerce is obtained from the *C. Daco*, a native of Sumatra and Borneo. See DRAGON'S BLOOD.

Digitized by Google

CALAMUS AROMATICUS. The *Acorus* or sweet Flag. The drug sold under this name in our shops is the produce of the *Acorus Calamus*. The plant is a native of this country, of various parts of Europe, and of India. The Indian variety furnishes a famous medicine in the Levant, while the Turks candy it and regard it as a remedy against contagion. The rushes, which were formerly strewn over the floors of rooms, were the leaves of this plant.

CALCAREOUS EARTH (*Terre calcaire*, Fr.; *Kalkerde*, Germ.) commonly denotes lime, in any form; but, properly speaking, it is pure lime. This term is frequently applied to marl, and to earths containing a considerable quantity of lime.

CALCAREOUS SPAR. Crystallised native carbonate of lime, of which there are many varieties.

Carbonic acid 44·0, lime, 56·0, may be regarded as the usual composition of calc spar; it often contains impurities upon which depend the colours assumed by the crystal. The carbonates of lime are extensively distributed in nature, as marbles, chalk, and crystalline minerals. See ICELAND SPAR, MARBLE, &c.

CALCAREOUS TUFA. This term is applied to varieties of carbonate of lime, formed by the evaporation of water containing that mineral in solution.

It is formed in fissures and caves in limestone rocks, about the borders of lakes, and near springs, the waters of which are impregnated with lime. In the latter cases it is frequently deposited upon shells, moss and other plants, which it covers with a calcareous crust, producing frequently a perfect representation in stone of the substance so enveloped.—H. W. B.

CALCEDONYX. The name of those agates in which opaque white calcedony alternates with the translucent grey variety.

CALCEDONY. See CHALCEDONY.

CALCHANTUM. The ancient name of the native sulphate of iron.

CALCINATION (from *Calcine*). The operation of expelling from a substance, by heat, either water, or volatile matter combined with it. Thus, the process of burning lime, to expel the carbonic acid, is one of calcination. The result of exposing the carbonate of magnesia to heat, and the removal of its carbonic acid, is the production of *calcined magnesia*. This term was, by the earlier chemists, applied only when the substance exposed to heat was reduced to a *calx*, or to a friable powder, this being frequently the oxide of a metal. It is now, however, used when any body is subjected even to a process of roasting.

CALCITE. See ICELAND SPAR.

CALCIUM (*Equivalent* 20.) The metal contained in the oxide well known as lime. It was first obtained by Davy, in 1808, by the electrolysis of the hydrate, carbonate, chloride, or nitrate of lime. Matthiessen obtains it by heating, in a porcelain crucible, a mixture of two equivalents of chloride of calcium, with one equivalent of chloride of strontium, and muriate of ammonia, until the latter is volatilised. The current from six cells of Bunsen's battery is then sent through the mixture by a charcoal pole of as large size as possible, and a piece of iron piano-forte wire (No. 6), not more than two lines in length, which is united with the negative pole of the battery by means of a stronger wire reaching close to the surface. A small crust is to be formed round the wire at the surface. To collect the small globules deposited on the wire, the latter must be taken out every two or three minutes, together with the crust. The globules are crushed in a mortar, and the flattened granules are then picked out. Calcium is a brilliant pale yellow metal, malleable and ductile. See LIME.—C. G. W.

CALC-SINTER. The incrustations of carbonate of lime upon the ground, or the pendulous conical pieces called stalactites, attached to the roofs of caverns, are so called.

CALCULUS. The stony-looking morbid concretion occasionally formed in the bladders and other parts of living animals. Its examination belongs to medical chemistry.

CALENDER (*Calandre*, Fr.; *Kalander*, Germ.), a word derived from the Greek κύλινδρος (cylinder), is the name of a machine consisting of two or more cylinders revolving so nearly in contact with each other, that cloth passed through between them is smoothed, and even glazed, by their powerful pressure. It is employed either to finish goods for the market, or to prepare cotton and linen webs for the calico printer, by rendering their surfaces level, compact and uniform. This condensation and polish, or *satinage* as the French call it, differ in degree according to the object in view, and may be arranged in three different series: 1. For goods which are to receive the first impression by the block, a very strong pressure is required, for upon the uniformity of the polish the neatness and the regularity of the printing and the correspondence of its members depend. 2. The pieces already dyed up at the madder bath, or otherwise, and which remain to be filled in with other colours, or *grounded in*, as it is technically called, must receive a much less considerable gloss. 3. The

Digitized by Google

degree of glazing given to finished goods depends upon the taste of purchasers, and the nature of the article; but it is, in general, much less than for the first course of block printing.

The calico printers of Alsace employ an improved form of calender to that usually employed in this country, which is the contrivance of M. Charles Dollfus. It is described as possessing the following advantages: 1. It passes two pieces at once, and thus does double the work of any ordinary machine. 2. It supersedes the necessity of having a workman to fold up the goods, as they emerge from the calender with the aid of a self-acting folder. 3. It receives, at pleasure, the finished pieces upon a roller, instead of laying them in folds; and, by a very simple arrangement, it hinders the hands of the workman from being caught by the rollers.

The most remarkable feature of M. Dollfus's machine is its being managed by a single workman. Six or eight pieces are coiled upon the feed roller, and they are neither pasted nor stitched together, but the ends are merely overlapped half a yard or so. The workman is careful not to enter the second piece till one third or one half of the first one has passed through on the other side, to prevent his being engrossed with two ends at a time. He must, no doubt, go sometimes to the one side and sometimes to the other of the machine to see that no folds or creases occur, and to be ready for supplying a fresh piece as the preceding one has gone through. The mechanism of the folder in the Alsace machine is truly ingenious: it performs extremely well, and saves an extra workman. The lapping-roller works by friction, and does its duty fully better than similar machines guided by the hand.

The numerous accidents which have happened to the hands of workmen engaged in calenders should direct the attention towards an effective contrivance for preventing such misfortunes. These various improvements in the Alsace machine may be easily adapted to the ordinary calenders of almost every construction.

The folder is a kind of cage in the shape of an inverted pyramid, shut on the four sides, and open at top and bottom: the top orifice is about five inches, the bottom one an inch and a half: the front and the back, which are about four feet broad, are made of tin plate or smooth pasteboard, and the two sides are made of strong sheet-iron, the whole being bolted together by small bars of iron. Upon the sheet-iron of the sides, iron uprights are fixed, perforated with holes, through which the whole cage is supported freely by means of studs that enter into them. One of the uprights is longer than the other, and bears a slot with a small knob, which, by means of the iron piece, joins the guide to the crank of the cylinder, and thereby communicates to the cage a see-saw movement: at the bottom extremity of the great upright there is a piece of iron in the shape of an anchor, which may be raised, or lowered, or made fast by screws.

At the ends of this anchor are friction rollers, which may be drawn out or pushed back and fixed by screws: these rollers lift alternately two levers made of wood, and fixed to a wooden shaft.

The paws are also made of wood: they serve to lay down alternately the piles of the cloth which passes upon the cage, and is folded zigzag upon the floor, or upon a board set below the cage; a motion imparted by the see-saw motion of the cage itself.

To protect the fingers of the workmen, above the small plate of the spreading-board or bar, there is another bar, which forms with the former an angle of about 75°: they come sufficiently near together for the opening at the summit of the angle to allow the cloth to pass through, but not the fingers. See *Bulletin de la Société Industrielle de Mulhausen*, No. 18.

It is not thought necessary to give a drawing of the calender usually employed in this country; a few remarks may not, however, be out of place. The iron rollers are made hollow for the purpose of admitting either a hot roller of iron, or steam, when hot calendering is required. The other cylinders used formerly to be made of wood, but it was liable to many defects. The advantage of the paper roller consists in its being devoid of any tendency to split, crack, or warp, especially when exposed to a considerable heat from the contact and pressure of the hot iron rollers. The paper, moreover, takes a vastly finer polish, and, being of an elastic nature, presses into every pore of the cloth, and smooths its surface more effectually than any wooden cylinder, however truly turned, could possibly do.

The paper cylinder is constructed as follows:—The axis of the cylinder is a strong square bar of the best wrought iron, cut to the proper length. Upon this bar a strong round plate of cast iron is first put, somewhat less in diameter than the cylinder when finished; a quantity of thick stout pasteboard is then procured, and cut into round pieces an inch larger in diameter than the iron plate. In the centre of the plates, and of every piece of the pasteboard, a square hole must be cut to receive the axis; and, the circle being divided into six equal parts, a hole must also be cut at each of the divisions an inch or two within the rim. These pieces of pasteboard being successively put upon the axis, a long bolt of malleable iron. with a head at one end, and

Digitized by Google

screwed at the other, is also introduced through each of the holes near the rim; and this is continued until a sufficient number of pasteboards are thus placed to form a cylinder of the length required, proper allowance being made for the compression which the pasteboard is afterwards to undergo. Another round plate is then applied, and nuts being put upon the screws, the whole are screwed tight, and a cylinder formed. This cylinder is now to be placed in a stove, exposed to a strong heat, and must be kept there for at least several days; and, as the pasteboard shrinks by exposure to the heat, the screws must be frequently tightened until the whole mass has been compressed as much as possible. When the cylinder is thus brought to a sufficient degree of density, it is removed from the stove; and, when allowed to cool, the pasteboard forms a substance almost inconceivably dense and hard. Nothing now remains but to turn the cylinder; and this is an operation of no slight labour and patience. The motion in turning must be slow, not exceeding about forty revolutions in a minute; the substance being now so hard and tough that tools of a very small size must be used to cut, or rather scrape it, until it is true. Three men are generally employed for the turning, even when the motion of the cylinder is effected by mechanical power, two being necessary to sharpen tools, as quickly as he blunts them, for the third who turns.

Let us suppose it to be a five-rollered machine: when a person stands in front of the calender, the cloth coming from behind above the uppermost cylinder 1, passes between 1 and 2; proceeding behind 2, it again comes to the front between 2 and 3; between 3 and 4 it is once more carried behind, and, lastly, brought in front between 4 and 5, where it is received and smoothly folded on a clean board, or in a box, by a person placed there for the purpose. In folding the cloth at this time, care must be taken that it may be loosely done, so that no mark may appear until it be again folded in the precise length and form into which the piece is to be made up. The folding may be done either by two persons or by one, with the aid of two sharp polished spikes placed at a proper distance, to ascertain the length of the fold, and to make the whole equal. When folded into lengths, it is again folded across upon a smooth clean table, according to the shape intended, which varies with the different kinds of goods, or the particular market for which the goods are designed.

When the pieces have received the proper fold, the last operation previous to packing them is the pressing. This is commonly performed by placing a certain number of pieces, divided by thin smooth boards of wood, in a common screw press similar to those used by printers for taking out the impression left by the types in the printing-press. Besides the wooden boards, a piece of glazed pasteboard is placed above and below every piece of cloth, that the outer folds may be as smooth and glossy as possible. The operation of the common screw press being found tedious and laborious, the hydraulic press is now had recourse to in all well mounted establishments. See Hydraulic Press.

For lawns and muslins of a light texture, the operation of smoothing requires a different process in some respects than close heavy fabrics. They only require to be slightly smoothed to remove any marks which they may have received at the bleaching; and, as their beauty depends rather on their transparency than their closeness, the more the cylindrical form of the yarn is preserved the better. They are therefore put through a small machine, consisting of three rollers or cylinders: and, as the power required to move this is small, the person who attends it generally drives it by a small winch; or the same effect may be produced by passing the muslins between only two or three rollers of the above calender, lightly loaded.

In the thick fabrics of cloth, including those kinds which are used for many parts of household furniture, as also those for female dress, the operation of glazing is used both to add to the original beauty of the cloth, and to render it more impervious to dust or smoke. The glazing operation is performed entirely by the friction of any smooth substance upon the cloth; and to render the gloss brighter, a small quantity of bleached wax is previously rubbed over the surface. The operation of glazing by the common plan is very laborious, but the apparatus is of the most simple kind. A table is mounted with a thick stout cover of level and well-smoothed wood, forming an inclined plane; that side where the operator stands at work being the lowest. The table is generally placed near a wall, both for convenience in suspending the glazing apparatus, and for the sake of light. A long piece of wood is suspended in a groove formed between two longitudinal beams, placed parallel to the wall, and fixed to it. The groove resembles exactly the aperture between the shears of a common turning lathe. The lever, of which the groove may be supposed to be the centre of fulcrum, is faced at the bottom with a semi-cylindrical piece of finely polished flint, which gives the friction to the cloth stretched upon the table below. Above the flint are two cross handles, of which the operator lays hold, and moves them backward and forward with his hands, keeping the flint pressing slightly upon the cloth.

Digitized by Google

When he has glazed a portion equal to the breadth of the flint, he moves his lever between the shears sidewise, and glazes a fresh part: thus he proceeds from one side or selvage of the cloth to the other; and when all which is upon the table is sufficiently glazed, he draws it over, and exposes a new portion to the same operation. To preserve the cloth at a proper tension, it may be wound smoothly upon a roller or beam, which being set so as to revolve upon its own axis behind the table, another roller to receive the cloth may be placed before, both being secured by a catch, acting in a ratchet wheel. Of late years, however, a great part of the labour employed in glazing cloth has been saved, as the common four or five bowl calender has been altered to fit this purpose by direct pressure.

As a matter of accommodation, the different processes of packing, cording of boxes, sheeting of trunks, and, in general, all the arrangements preparatory to shipment, and also the intimations, and surveys necessary for obtaining drawbacks, debentures, or bounties, according to the excise laws, are generally conducted at the calender houses where goods are finished.

CALEDONITE, from Caledonia. A cupreous sulpho-carbonate of lead found in minute bluish-green crystals associated with other ores of lead at the Lead Hills mines in Lanarkshire. This mineral has also been found in Cumberland, at Tanné in the Hartz, and from Mine la Motte, Missouri. (*Dana*).

CALIBRE (*Calibre*, Fr.; *Calibro*, It.) The bore or diameter of a gun, or the diameter of a bullet: it is measured in inches, and in smooth bore guns is larger than the diameter of the ball.

CALICO, (from *Calicut*), in India. A term for any white cotton cloth, which was first manufactured in, and introduced from India. In this country we have shirting calicoes, unbleached calicoes, and the like. In the United States the term is restricted to cotton cloths having patterns printed upon them.

CALICO-PRINTING is the art of producing a pattern on cotton cloth, by printing in colours, or mordants, which become colours, when subsequently dyed. Calico derives its name from Calicut, a town in India, formerly celebrated for its manufactures of cotton cloth, and where calico was also extensively printed. Other fabrics than cotton are now printed by similar means, viz. linen, silk, wool, and mixtures of wool and cotton. Linen was formerly the principal fabric printed, but since modern improvements have produced cotton cloth at a comparatively cheap rate, linen fabrics are now sparingly used for printing, and then principally for handkerchiefs, linen cloth not producing such beautiful colours, in consequence of the small affinity of flax for mordants, or colouring matters. Silk printing, also, is chiefly confined to handkerchiefs, but the printing of woollen fabrics or mousseline de laines is an important branch of the art. The earliest mode of ornamenting cloth with designs was, no doubt, by embroidery with the needle, and this mode was almost coeval with the art of dyeing, which is of very remote antiquity. Herodotus mentions, that Amasis, king of the Egyptians, sent to the Lacedæmonians a pectoral of linen, adorned with many figures of animals, woven into the cloth, and enriched with gold and a variety of colours. A similar pectoral was taken among the spoils at the battle of Issus, and presented to Alexander the Great, who wore it afterwards as part of his military attire. Cloth was, however, stained in a rude manner by ancient tribes with juices of plants. Herodotus mentions a Scythian tribe who stained their garments with figures of animals by means of the leaves of a tree bruised with water, which figures would not wash out, and lasted as long as the cloth. It is an interesting speculation as to what this dye was. The garments so stained were probably woollen, as in early times the outer garments were always woollen, and the particular dye might have been indigo in a soluble state, as produced by fermenting the leaves with water; according to Sir William Jones, the leaves of the shrub henna, when bruised in water, stain the skin or nails orange, and would doubtless do the same on woollen cloth. The first record of calico-printing as an art is that of Pliny, who describes the process followed by the Egyptians, who seem to have attained a very considerable degree of refinement in the art. "Robes and white veils," says he, "are painted in Egypt in a wonderful way. They are first imbued, not with dyes, but with dye-absorbing drugs, by which, though they seem to be unaltered, yet, when immersed for a little while in a cauldron of the boiling dye-liquor, they are found to become painted. Yet, as there is only one colour in the cauldron, it is marvellous to see many colours imparted to the robe, in consequence of the influence of the excipient drug. Nor can the dye be washed out. A cauldron, which would of itself merely confuse the colours of cloths previously dyed, is thus made to impart several pigments from a single dye-stuff, *painting as it boils*." The last expression, *pingitque dum coquit*, is perfectly graphic and descriptive of some processes in calico-printing.

Calico-printing is of very ancient date in India, and probably this country is the birth-place of the art, since, beyond doubt, cotton cloth originated in India, and the

Digitized by Google

abundance of dye-stuffs, and the facility with which cotton receives dyes, rendered the staining it with figures a natural consequence, and there is good reason to suppose that the Egyptians learnt the art from India, since the Indians were highly civilised twenty-two centuries ago; and there was undoubtedly communication between India and Egypt before the time of Pliny. There is an account of Indian calico-printing by Father Cœurdoux, a missionary at Pondicherry, and in a manuscript account sent from thence by M. du Fay, and communicated to the Royal Academy of Sciences at Paris by the Abbé Mazeas, also from the report by M. Beaulieu, of operations performed under his inspection at Pondicherry.—*Bancroft.*

These accounts describe the mode of producing the chintz calicoes, which were celebrated in Europe before the art had been introduced and simplified there. From these accounts of the cumbrous and tedious processes adopted by the natives, we have no difficulty in understanding the necessity that arose for the intervention of European skill and science, and can readily comprehend how it is that the European printer, to say nothing of superior artistic excellence, can compete successfully in India with the proverbially low-priced labour of Hindostan. After the cloths were partially bleached, they underwent several alternate steeps in goats'-dung, beating, washing, and drying in the sun; they were then soaked in an astringent solution obtained from myrabolams, mixed with buffaloes' milk; squeezed out of this, they were dried in the sun, and, by pressure with wooden rollers, made smooth enough to have a pattern drawn on them with a pencil, applying various mordants: the general course was to paint on a mordant of iron liquor, similar in constitution to that at present used in calico-printing. This formed a black with the tannin substance previously applied. The next step was to give the blue, and for this purpose the cloth required to be freed from the astringent by maceration in goats'-dung, well washing and drying in the sun; the parts intended to be white were then protected by a coat of melted wax; the cloth was then dipped in an indigo vat: when dyed, the wax had to be thoroughly removed by boiling in water, steeping in dung, washing with a sort of impure soda, renewed steeping in dung, washing and drying in the sun; after this the cloth was treated, as before, with the astringent milk mixture, dried and smoothed. It was then ready to receive the red and chocolate mordants, the red being simply alum mixed with a little soda to render it basic, and the chocolate, this red mixed with the iron mordant; (the use of acetate of alumina not being known, the albumen of the milk and the tannin combined with and fixed the alumina on the cloth). After careful sun-drying, the cloth was well steeped and rinsed in water to remove the excess of mordants, &c., and then dyed with madder or chaya root. After this they were washed with dung and soap, exposed to the sun, and watered occasionally till the white parts were bleached. Yellow, made from alum and myrabolams was now pencilled in, and green formed by the yellow going over the blue. This process gave chintzes, the colours of which were generally very bright and lively, and most of them exceedingly durable. M. Koechlin Roder, of Mulhausen, brought home from India a rich collection of cloths in every state of preparation, which are in the cabinet of the *Société Industrièlle* of that interesting emporium of calico-printing. The native implements for applying the wax and colouring bases are placed alongside of the cloths, and form a curious picture of primeval art. There is among other samples an ancient *pallampoor*, five French yards long, and two and a half broad, said to be the labour of Hindoo princesses, which must have taken a lifetime to execute.

Calico-printing was not, however, in all oriental countries executed with the pencil. The shawl printers of Cashmere use small wooden blocks for their complicated patterns. Mr. Buckingham states, that at Orfah, in Mesopotamia, the printers employ wooden blocks of 4 to 6 inches square, and use them nearly in the same manner as the block printers in this country; and it is well known that the Chinese employed block-printing long before any species of printing was known in this country.

Calico-printing has been for several hundred years practised by the oriental methods in Asia Minor and the Levant, but it was unknown as an English art till about the close of the seventeenth century. It is believed that the first attempts at imitating the printed calicoes of India were made in Holland, the Dutch East India Company having introduced the Indian chintzes there before their introduction into this country. It is uncertain where or when these first attempts were made; but it appears the art soon spread to Germany, for about the close of the seventeenth century Augsburg had obtained a notoriety for printed linens and cottons. The art was most probably introduced into England about 1676, by Flemish emigrants. Mr. James Thompson, of Clitheroe, one of the most eminent English calico-printers, fixed the date at 1690, and supposed that a Frenchman, a refugee, at the time of the revocation of the edict of Nantes, was the first to print calicoes in this country, and that his works were at Richmond on the Thames; but there is evidence to show that prior to

Digitized by Google

this date, calicoes were printed in this country, for Sir Joshua Child, a distinguished director of the East India Company, in a pamphlet published in 1677, mentions that calicoes were then brought over from India to be printed in this country, in imitation of the Indian printed chintzes. It appears, from a petition addressed to the House of Commons by the East India Company in 1627, that Indian calicoes were at that time imported, and in 1631, in a catalogue of legal imports from India, painted calicoes are mentioned as to be allowed. In 1634, apparently, attempts were made to ornament fabrics with coloured patterns by mechanical means, for in that year Charles II. granted an exclusive patent for fourteen years, for the art or mystery of affixing wool, silk, and other materials of divers colours upon linen, silk, or cotton cloth, leather, and other substances, by means of oil, size, or other cements, to make them useful for hangings, &c., the patentee paying 10*l.* yearly to the Exchequer. Calico-printing was commenced in 1689, at Neufchâtel, by Jaques Deluze, a native of Saintonge, and this establishment rapidly became prosperous, and in time the parent of numerous offshoots in Germany, Portugal, and France.

Some time after the Richmond establishment, a considerable printing work was established at Bromley Hall, in Essex, and several others sprung up successively in Surrey, to supply the London shops with chintzes, their import from India having been prohibited in 1700 by parliament. The art in its infancy had to struggle with many difficulties; an excise tax on all printed or dyed calicoes of 3*d.* per square yard was enacted in 1702, and which was increased to 6*d.* per square yard in 1714, only half these duties being laid on printed linens.

The silk and woollen weavers had all along manifested the keenest hostility to the use of printed calicoes, whether brought from the East or made at home. In the year 1680 they mobbed the India House in revenge for some large importations then made of the chintzes of Malabar. They next induced the Government, by incessant clamours, to exclude altogether the beautiful robes of Calicut from the British market. But the printed goods imported by the English and Dutch East India companies found their way into this country, in spite of the excessive penalties annexed to smuggling, and raised a new alarm among the manufacturing population of Spitalfields. The sapient legislators of that day, intimidated, as would appear, by the East London mobs, enacted in 1720 an absurd sumptuary law, prohibiting the *wearing of all printed calicoes whatsoever, either of foreign or domestic origin.* This disgraceful enactment, worthy of the meridian of Cairo or Algiers, proved not only a death-blow to rising industry in this ingenious department of the arts, but prevented the British ladies from attiring themselves in the becoming drapery of Hindostan.

"The effect of this law," says Mr. Edmund Potter, in his lecture on Calico Printing, before the Society of Arts, as reporter on printed fabrics in the Exhibition of 1851, "was to put an end to the printing of calicoes in England, and to confine the printers to the printing of linens. In 1736, so much of this Act was repealed as forbade the use or wear of printed goods of a mixed kind, containing cotton; and these fabrics were allowed to be printed, weighted with a duty of 6*d.* per square yard. In 1750, the entire production of Great Britain was estimated at 50,000 pieces per annum. In 1764, printers established themselves in Lancashire, tempted, doubtless, by the cheapness of fuel, and by this being the locality in which the cloth was manufactured. In 1774, the printer was released from his fetters with regard to the kind of cloth he must use, by the repeal of this law, so as to leave him the choice of his material; but he was still saddled with a duty of 3*d.* per square yard, to which a halfpenny was added in 1806. On the accession of Lord Grey's government to office it was one of their first acts to repeal this duty. Thus, after a period of about 140 years from its first introduction, the print trade was allowed to enter into competition with other kindred fabrics on a fair footing."

France pursued for some time a similar false policy with regard to calico-printing, but she emerged sooner from the mists of manufacturing monopoly than England. Her avowed motive was to cherish the manufacture of flax, a native product, instead of that of cotton, a raw material, for which prejudice urged that money had to be exported. Her intelligent statesmen of that day replied, that the money expended in the purchase of cotton was the product of French industry beneficially employed, and they therefore took immediate measures to put the cotton fabrics upon a footing of equality. Meanwhile the popular prejudices became irritated to such a degree, by the project of permitting the free manufacture and sale of printed cottons, that every French town possessed of a chamber of commerce made the strongest remonstrances against it. The Rouen deputies declared to the Government, "that the intended measure would throw its inhabitants into despair, and make a desert of the surrounding country:" those of Lyons said, "the news had spread terror through all its workshops:" Tours "foresaw a commotion likely to convulse the body of the State:" Amiens said, "that the new law would be the grave of the

Digitized by Google

manufacturing industry of France;" and Paris declared that "her merchants came forward to bathe the throne with their tears upon that inauspicious occasion."

The Government persisted in carrying its truly enlightened principles into effect, and with manifest advantage to the nation, for the despair of these manufacturing towns has been replaced by the most signal prosperity.

France probably produces at the present time nearly 5,000,000 pieces of print per annum, which, considering the quality of many of them, may be considered a very important manufacture.

The great disadvantage under which the French printers labour is the higher price they pay for cotton fabrics and fuel above that paid by the English printers.

The repeal, in 1831, of the consolidated duty of 3¼*d.* per square yard upon printed calicoes in Great Britain is one of the most judicious acts of modern legislation. By the improvements in calico-printing, due to the modern discoveries and inventions in chemistry and mechanics, the trade had become so vast as to yield in 1830 a revenue of 2,280,000*l.* levied upon 8,596,000 of pieces, of which, however, about three-fourths were exported, with a drawback of 1,579,000*l.* 2,281,512 pieces were consumed in that year at home. When the expenses of collection were deducted, only 350,000*l.* found their way into the Exchequer, for which pitiful sum thousands of frauds and obstructions were committed against the honest manufacturer. This reduction of duty enables the consumer to get this extensive article of clothing from 50 to 80 per cent. cheaper than before, and thus places a becoming dress within the reach of thousands of females in the humbler ranks of life. Printed goods, which in 1795 were sold for 2*s.* 3*d.* the yard, may be bought at present for 6*d.* The repeal of the tax has been no less beneficial to the fair dealers, by putting an end to the contraband trade, formerly pursued to an extent equally injurious to them and the revenue. It has, moreover, emancipated a manufacture eminently dependent upon taste, science, and dexterity from the venal curiosity of petty excisemen, by whom private improvements, of great value to the inventor, were in perpetual jeopardy of being pirated and sold to any sordid rival. The manufacturer has now become a free agent, a master of his time, his workmen, and his apparatus; and can print at whatever hour he may receive an order; whereas he was formerly obliged to wait the convenience of the excise officer, whose province it was to measure and stamp the cloth before it could be packed, — an operation fraught with no little annoyance and delay. Under the patronage of Parliament, it was easy for needy adventurers to buy printed calicoes, because they could raise such a sum by drawbacks upon the export of one lot as would go far to pay for another, and thus carry on a fraudulent system of credit, which sooner or later merged into a disastrous bankruptcy. Meanwhile the goods thus obtained were pushed off to some foreign markets, for which they were, possibly, not suited, or where they produced, by their forced sales, a depreciation of all similar merchandise, ruinous to the man who meant to pay for his wares.

Calico-printing was first practised in Scotland in 1738, twenty-six years previous to its introduction into Lancashire. The following sketch of the early Lancashire printing is taken from Mr. Potter's pamphlet:— "The trade was established in Lancashire in 1764, by Messrs. Clayton, of Bamber Bridge, near Preston; the cloth that was printed being made with linen warp and cotton weft, and produced principally at Blackburn; this was the reason of many printers settling near Blackburn, which was for a long time the great seat of the print trade. The introduction of power-loom cloth caused the migration of a considerable print trade to Stockport, Hyde, Staleybridge, and North Derbyshire. The Claytons were followed by Mr. Robert Peel, who entered into the cotton business, and added to it the printing business. He carried on the business for some years at Brookside, near Blackburn, aided by his sons. The eldest son afterwards branched off from his father's concern, and established himself at Bury with his uncle, Mr. Haworth, and Mr. William Yates.

"During the period 1796 to 1821, the Forts, Hargreaves, and Thompsons fairly established themselves as extensive and wealthy printers, not more by their energy and business talent than by their scientific attainments, and by the unbounded and lavish support which they gave to everything which art and science could suggest to assist them. Mr. James Thompson, of Primrose, near Clitheroe, was for forty years the recognised head of the print trade. The era of his commencement in the trade was the beginning of a series of discoveries and new applications in chemical science to the purposes of calico-printing. During forty years he devoted himself and the ample funds his business placed at his disposal to the advancement of taste in connection with his trade. No sums, however large, were spared to draw into its service the talent even of royal academicians, and of many other eminent men high in art." Mr. John Mercer, of the house of Fort Brothers, and a contemporary of Mr. Thompson, but now retired from business, for a long period rendered valuable assistance to the

Digitized by Google

trade by the introduction of chemical novelties; and many styles founded by him are still popular. The house of Hargreaves Brothers and Co., during the same period, took a prominent position in the production of new and original colours and styles.

In France M. Koechlin was looked up to as the leader of the trade, and was mainly instrumental in establishing sound scientific principles in the art. "During the progressive improvement, dating from 1831, one house may be named, of high standing, who introduced a colour superior in brilliancy, fastness, and utility for domestic wear, to any other previously known. This was the madder purple of Messrs. Thomas Hoyle and Sons, a colour which may be said to have superseded the old Navy blue print in English wear. Messrs. Hoyle and Sons maintained their well-deserved superiority for many years. The London printers, up to the repeal of the duty, still held their position for first-class goods. They made great use of the flat press printing machine. Their plates were well engraved, and for a long time they succeeded in getting a smartness of impression, better than any at that time obtained from the cylinder. Some few of the Lancashire printers adopted the press, the better to compete with the town printer. The rapidly increasing trade in Lancashire, and with it the power of so much cheaper production, gradually undermined the London printers, and brought about a complete change in their class of work."—The London printers now print fine shawls, handkerchiefs, waistcoatings, and a superior class of cotton prints for furniture hangings. The present annual production of printed cloth of all kinds in Great Britain may be estimated at about 20,000,000 pieces. In 1840 the quantity produced was about 16,000,000. The quantity now, probably, rather exceeds 20,000,000 of pieces; but, from the absence of any very authentic statistics, the quantity is very difficult to arrive at. The print trade, according to Mr. Bazley, consumes a weight of cotton about one-seventh the entire import into this country.

Owing to her natural advantages, England has by far the largest portion of the calico-printing trade, and especially of the export trade; and probably at the present time England produces as many printed pieces as all the rest of the world put together. The United States produces next to ourselves in quantity; France and Switzerland the next to America in *quantity*, but far superior to her in *quality*, and second only to ourselves in value of production. France is the only competitor we have to meet in the neutral markets of the world. The Zollverein, Austria, and Bohemia produce for their own markets, and by high protecting duties prevent any other supply, except of very fine French goods. Holland produces a small quantity of medium goods; Belgium also produces a few; Naples has a few small print works; Russia produces for her own market, and the number of works has rapidly increased of late — her market is almost prohibited to us: Spain produces a limited quantity of inferior goods; Portugal has a slight production; Turkey produces a few printed goods, hardly worth notice; the Sultan Abdul Medjid has tried the experiment of organising print works on the English principle, with English artisans and foremen, but the experiment was a complete failure: Egypt also has revived the art, with very inferior results. The Chinese undoubtedly practised the art of calico printing many centuries before ourselves. Mr. Potter was able to exhibit samples of Chinese work to the Society of Arts, which he described as of very primitive taste and rude execution. "Mulhausen, it may not be uninteresting to mention," says Mr. Potter, "is certainly the seat of the finest printing in the world. Calico-printing was first established there in 1746, by the firm of Koechlin and Co., and is still carried on by descendants of the original firm; and during the whole period, and not less so now, the house has had a high and justly deserved reputation for talent and taste; and to them the chemistry of the trade is most deeply indebted for many valuable processes and discoveries. Other houses of almost equal celebrity followed, and Mulhausen has justly maintained its reputation of being, for fine goods, the first calico-printing district in the world."

The first step in calico-printing is to remove the fibrous down from the surface of the cloth, which is done by passing the piece rapidly through a flame of gas, or over a red hot semi-circular plate. The latter method will be found described under the head of BLEACHING; the former is performed as follows: — *Fig.* 345, is a vertical section of the gas-singeing apparatus. Its diameter is such as to admit of pieces of the greatest width. The pipe A runs along from end to end under the machine, and is supplied with ordinary gas; the pipes B B are branched into this, being five in number on each side. Connected with these branches are the pipes C C, which are perforated with fine holes, at distances of about $\frac{1}{4}$th of an inch, the pipes B B are furnished with taps *a a*. Above the tubes C C are the pipes D D, which are cut open at the bottom along the length, and communicate by the branch pipes F F with the large pipe E, which is exhausted by a fan. Two pairs of cylinders, G G, of wood, covered with fustian, turn on their axes in the direction of the arrows, and draw through them the pieces *d d* with a velocity of about 4 feet per second. The pair of rollers G G to the right are moved by

Digitized by Google

a belt and pulley; the other pair is moved by belts which embrace the under roller of each pair. H H are brushes in pairs which remove the loose down. The rubber

345

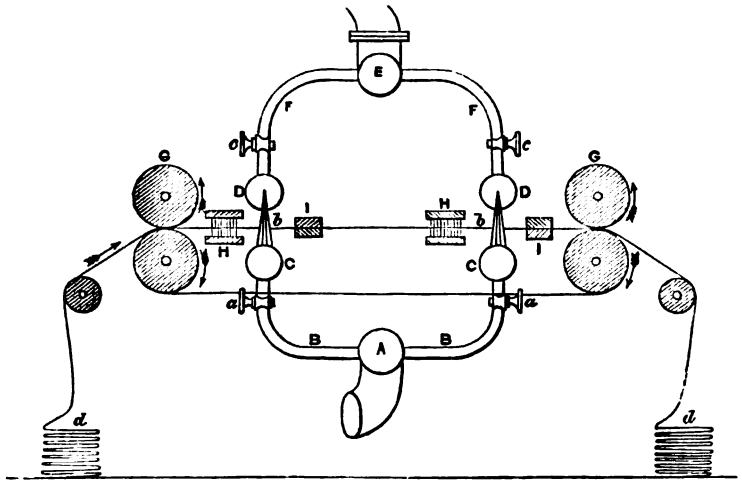

II of wood, covered with fustian, serves to extinguish any sparks that might be drawn on with the cloth. In using this machine the two rows of gas are lighted, and the size of flame regulated by the taps till it burns blue, and in one continuous line of fire, the drawing rollers are then made to revolve, and the end of the first piece being laid between the left rollers, is drawn through by means of a narrow piece of list fastened to it; the end of the piece once through the right rollers, the operation proceeds rapidly, the pieces, of course, being stitched end to end.

This gas-singeing apparatus has the effect of making cloth appear thinner than it really is, in consequence of the flame passing through the fibres, and not merely on the surface. It is, therefore, not so much used as the hot plate. In France and Germany a machine called the *tondeuse* is used, and which is very similar to the shearing machine used in the manufacture of woollen cloth. (See WOOLLEN MANUFACTURE.) A series of knives, running spirally round a roller, shave off the down by the roller revolving on its axis as the cloth passes underneath. This machine makes the cloth smoother and more free from flaws or lumps than either of the other machines, but is not yet used in England.

The bleaching requisite for printing cloths is of much superior nature to that sufficient for calico intended to be sold in the white state. It is sufficient for the latter to be white enough to please the eye, a result easily obtained by chlorine treatment after a comparatively mild alkaline boiling; but the former must be so well boiled with lime and alkali, as to remove every particle of resinous and glutinous matter previous to the chlorine steep. This, if not attended to, becomes a source of great annoyance to the printer in his subsequent operations, from the difficulty of obtaining sufficiently good whites without injuring the colours. The high pressure kiers patented by Barlow, and which are fully described in the article BLEACHING, have been found to facilitate the thorough scouring of the cloth very much at a less cost than the old kiers.

Till about the year 1760, the printing of linens or calicoes was done by hand, wooden blocks being employed, on which the pattern is raised in relief. About this time a modification of the press used for printing engravings was adapted to printing with flat engraved copper plates on fabrics. This press was used to produce certain styles only, generally single colours, where delicacy of outline was required, shaded or stippled work being also introduced. The printing by blocks in several colours was the principal mode still, till in 1785 the cylinder printing machine was invented by a Scotchman named Bell, and brought into successful use at Mossuly, near Preston, by the house of Livesey, Hargreaves, and Co. The house of Oberkampf, of Jouy, in France, almost immediately adopted the invention, and have been frequently considered, in France at least, the originators of the machine; but it is now pretty certain that the honour of the invention is due to Great Britain. The introduction of the cylinder

Digitized by Google

machine gradually caused the disuse of the flat press, the London printers continuing to use them long after the Lancashire printers had given them up; the first cylinder machine was used in London in 1812. Blocks are still freely used for some description of prints, such as woollen or mousseline de laine goods, and also for introducing colours after printing by the cylinder and dyeing &c. — the cylinder not being capable of fitting in colours, after the piece has once left the machine. A blocking-machine, called the Perrotine was introduced in France in 1834 by M. Perrot, and is still extensively used there, but though tried in this country, it never came into general use. It executes as much work as twenty hand printers, and for the special purposes for which it was invented is a satisfactory machine; the patterns capable of being printed by it are, however, limited in size, in consequence of the narrow width of the blocks. Surface printing, or printing from cylinders engraved in relief, was an invention preceding by a few years the engraved copper cylinder, but apparently not in general use. In 1800, a Frenchman, named Ebingar, patented somewhat the same sort of thing, and in 1805, James Burton, of the house of Peel, at Church, invented the mule machine, which worked with one or two engraved copper cylinders, and one or two wooden rollers engraved in relief. This machine is very little used now, the impression produced by it not having the precision of that from copper rollers, and improvements in engraving copper rollers having given the printer many of the advantages possessed by the surface roller. Quite lately, however, Mr. James Chadwick has patented a species of surface roller which promises to become useful. The ordinary stereotyped patterns described hereafter are adapted by screws to a brass or other metal roller, which is then fitted on the mandrel used with the ordinary engraved rollers, and a firmness and solidity thus given which was never possessed by the wooden surface roller.

Printing by block is thus performed: — The hand blocks are made of sycamore or pear-tree wood, or of deal faced with these woods, and are from 2 to 3 inches thick, 9 or 10 inches long, and 5 broad, with a strong box handle on the back for seizing them by. The face of the block is either carved in relief into the desired design, like an ordinary wood-cut, or the figure is formed by the insertion edgewise into the wood of narrow slips of flattened copper wire. These tiny fillets, being filed level on the one edge, are cut or bent into the proper shape, and forced into the wood by the taps of a hammer at the traced lines of the configuration. Their upper surfaces are now filed flat, and polished into one horizontal plane, for the sake of equality of impression. As the slips are of equal thickness in their whole depth, from having been made by running the wire through between the steel cylinders of a flatting mill, the lines of the figure, however much they get worn by use, are always equally broad as at first; an advantage which does not belong to wood-cutting. The interstices between the ridges thus formed are filled up with felt-stuff. Sometimes a delicate part of the design is made by the wood-cutter, and the rest by the insertion of copper slips.

The colouring matter or mordant, properly thickened, is spread with a flat brush, by a child, upon fine woollen cloth, stretched in a frame over the waxcloth head of a wooden drum or sieve, which floats inserted in a tubful of old paste, to give it elastic buoyancy. The inverted sieve drum should fit the paste-tub pretty closely. The printer presses the face of the block on the drum-head, so as to take up the requisite quantity of colour, applies it to the surface of the calico, extended upon a flat table covered with a blanket, and then strikes the back of the block with a wooden mallet, in order to transfer the impression fully to the cloth. This is a delicate operation, requiring equal dexterity and diligence. To print a piece of cloth 28 yards long and 30 inches broad, no less than 672 applications of a block, 9 inches long and 5 inches broad, are requisite for each colour; so that if there are 3 colours, no less than 2016 applications will be necessary. The blocks have pin-points fixed into their corners, by means of which they are adjusted to their positions upon the cloth, so as to join the different parts of the design with precision. Each printer has a colour-tub placed within reach of his right hand; and for every different colour he must have a separate sieve. Many manufacturers cause their blocks to be made of three layers of wood, two of them being deal, with the grain crossed to prevent warping, and the third sycamore, for engraving.

The printing shop is an oblong apartment, lighted with numerous windows at each side, and having a solid table opposite to each window. The table B (*fig.* 346) is formed of a strong smooth flag, with a surface truly plane. Its length is about 6 feet, its breadth 2 feet, and its thickness 3, 4, or 5 inches. It stands on strong feet, with its top about 36 inches above the floor. At one of its ends there are two brackets C for supporting the axles of the roller E, which carries the white calico to be printed. The table is covered with blanket stretched tightly across and hooked at the side. The hanging rollers E are laid across joists fixed near the roof of the apartment above the printing shop, the ceiling and floor between them being open bar work, at least in

Digitized by Google

the middle of the room. Their use is to facilitate the exposure, and, consequently, the drying of the printed pieces, and to prevent one figure being daubed by another.

346

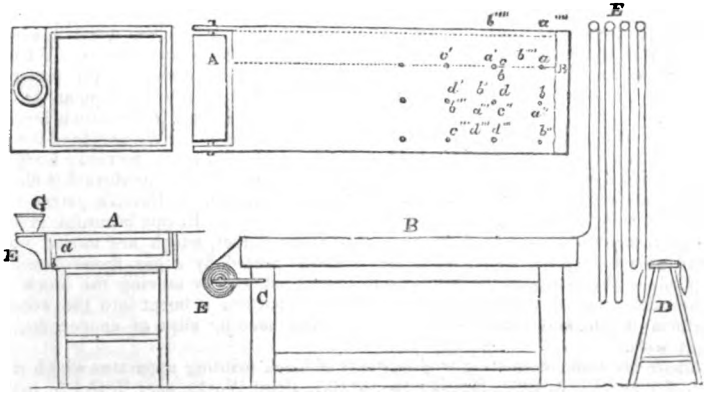

Should they come to be all filled, the remainder of the goods must be folded lightly upon the stool D.

The printer stretches a length of the piece upon his table A B, taking care to place the selvage towards himself, and one inch from the edge. He presents the block towards the end, to determine the width of its impression, and marks this line A B, by means of his square and tracing point. The spreader or teerer now besmears the cloth with the colour, at the commencement, upon both sides of the sieve head; because, if not uniformly applied, the block will take it up unequally. The printer seizes the block in his right hand, and daubs it twice in different directions upon the sieve cloth, then he transfers it to the calico in the line A B, as indicated by the four points *a b c d*, corresponding to the four pins in the corners of the block. Having done so, he takes another daub of the colour, and makes the points *a b* fall on *c d*, so as to have at the second stamp *a' b'*, covering *a b* and *c' d'*; and so on, through the rest, as denoted by the accented letters. When one table length is finished, he draws the cloth along, so as to bring a new length in its place.

The grounding in, on re-entering (*rentrage*), of the other colours is the next process. The blocks used for this purpose are furnished with pin-points, so adjusted that, when they are made to coincide with the pin-points of the former block, the design will be correct; that is to say, the new colour will be applied in its due place upon the flower or other figure. The points should not be allowed to touch the white cloth, but should be made to fall upon the stem of a leaf, or some other dark spot.

Every colour is printed separately, the printer going all through the piece with one block; the rest of the colours are next separately fitted into their places by the appropriate blocks, and the piece is then ready for the subsequent operations for raising the colours. Calico intended for printing by block is always smoothed by the calender (see CALENDER) the object being to leave the cloth stiff, so as to facilitate the printer joining the different block impressions. When pieces that have been printed by machine are required to have other colours inserted by block, as for instance, the grounding-in of blues, yellows, greens, &c., after printing and dyeing in madder colours, the same sort of process is adopted, the pieces being dried and calendered, and then printed by blocks technically termed *grounds*; these grounds are cut from sketches or tracings, taken from the dyed piece when calendered, and, consequently, fit accurately those parts which are intended to be blocked. The grounding-in of colours, after the operations of dyeing, was formerly done by pencils, which were merely small thin pieces of wood, which were dipped in the colour, and the necessary portions of the patterns, such as leaves, &c., painted in by hand. Of course, this method soon gave way to blocks; but the use of these pencils was continued down to a comparatively recent period for certain colours, such as *pencil-blue*, which being a solution of reduced indigo, was too speedily oxidised when spread on the sieve, and required instant application of the pencil. Even this colour was eventually applied by block, by a peculiar kind of sieve.

Of late years the tedious hand labour of cutting or coppering blocks has been much reduced by stereotyping; when the pattern has several repeats on the block, a casting in type-metal being made of the pattern, and as many of these as requisite arranged

Digitized by Google

on a plain block, and securely nailed down. It is obvious that the matrix once made, an infinite number of castings can be easily produced; the skilled labour is therefore reduced to a small portion of what was formerly requisite. The ordinary way of making the mould is to draw or trace on a small block of pear tree (sawn across the grain, so that the pattern is put on the end of the grain), the pattern to be typed. Slips of copper of varying thickness, but uniform width, are then driven down to a certain distance in the wood, just as in the ordinary way of coppering blocks. When the pattern is thus completed, the slips are pulled out, of course leaving the pattern indented in the wood; the block is now rubbed with chalk, and a border about $\frac{1}{16}$th of an inch deep of card nailed round the block. Melted type-metal is now run in level with the top of the card, and when cold, a tap with a hammer on the under side of the block easily detaches the type, which requires very little trimming to be ready for putting on the block; when a number of these are arranged on a block, the surface is filed and ground on a stone till perfectly level. The introduction of Burch's patent typing machine, still further simplified the stereotyping process. In this beautiful invention the matrix is formed by steel punches of varying shapes, which are moved up and down by a stirrup and lever, and which are kept heated, by a gas flame ingeniously applied, to the temperature sufficient to char wood, and by moving the block about under these punches and depressing them, the pattern is burnt into the wood to a uniform depth, and the labour of cutting and bending slips of copper, &c., done away with.

There are some interesting modifications of block-printing apparatus which may be here described. In 1834, Mr. Hudson, of Gale Print Works, near Rochdale, patented a mechanical teerer which was to dispense with the labour of children. The contrivance consists in a travelling endless web, moved by power, which, by passing progressively from the colour vat over the diaphragm, brings forward continuously an equable supply of the coloured paste for the workman's block.

Fig. 347 represents the construction of this ingenious apparatus, shown partly in section. *a a* is a vessel of iron, supported upon wooden standards, *b b*, over the upper surface of which vessel a sheet or diaphragm, *c c*, of oiled cloth, or other suitable elastic material, is distended, and made fast at its edges by being bent over a flange, and packed or cemented, to render the joints water-tight. A vertical pipe *d* is intended to conduct water to the interior of the vessel *a*, and, by a small elevation of the column, to create such upward pressure as shall give to the diaphragm a slight bulge like the swimming tub.

347

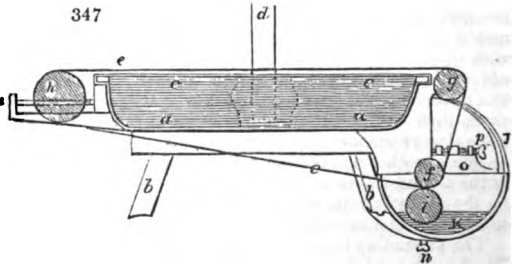

An endless web, *e e e*, passing over the surface of the diaphragm, is distended over three rollers, *f g h*, the lower of which, *f*, is in contact with the colour-roller *i* in the colour-trough K. On the axle of the roller *i* a pulley wheel is fixed, which allows the roller to be turned by a band from any first mover; or the roller may receive rotatory motion by a winch fixed on its axle. On this said axle there is also a toothed wheel, taking into *d* another toothed wheel on the axle of the roller *f*; hence, the rotation of the colour-roller *i* in the one direction will cause the roller *f* to revolve in the opposite, and to carry forward the endless web, *e e e*, over the elastic diaphragm, the web taking with it a stratum of colour received from the roller *i*, evenly distributed over its surface, and ready for the printer to dip his block into.

The axles of the rollers *f* and *g* turn in stationary bearings; but the axle of *h* is mounted in sliding nuts, which may be moved by turning the screws *m*, for the purpose of tightening the endless web. The axle of the colour roller *i* turns in mortises, and may be raised by screws *n*, in order to bring its surface into contact with the endless web. To prevent too great a quantity of colour being taken up, the endless web passes through a long slit, or parallel aperture in the frame *o*, which acts as a scraper or doctor, and is adjustable by a screw *p*, to regulate the quantity of colour carried up. The contents of the vessel *a*, and of the colour trough K, may be discharged when required by a cock in the bottom of each. This contrivance did not come into general use, probably from the waste of colour being too great. The Tobying sieve is a mode of applying with one block several colours at once, whereby the cost of several

Digitized by Google

blocks is saved, and, what is of more consequence, the cost of labour is very much reduced, as one printer produces the same result as the combined efforts of several.

Whenever designs are composed of coloured parts, where each colour lies separate, and where the outlines of the coloured parts are not too close together, a sieve of the following construction is made use of (*fig.* 348). A block of wood is scooped out in hollow compartments E, which vary in size and number according to the number and extent of the shades to be printed; these compartments communicate by tubes B at the bottom, with reservoirs A, at the sides of the sieve; over the compartments is then stretched tightly a woollen sieve; the surface of this cloth is cemented with melted resin string about $\frac{1}{8}$th of an inch thick, following the configurations of the compartments; the use of this is to prevent the colours mixing and becoming blended at the edges. Colours are now put in the reservoirs, which are kept filled up above the height of the cloth, so that a gentle pressure is exerted against the under side of the sieve. The colours are made of such a thickness as to pass through the cloth, and keep the upper surface moist, but still not too thin, or they would spread when printed. The sieve being thus prepared, the block is furnished with guides, which, working against the sides of the sieve frame, constrain the block to be always dipped in one place, and thus each part of the pattern finds itself furnished with its proper colour. Sometimes the compartments for the colours are made of metal when required to be durable, so as to serve for a large number of pieces of the same pattern.

348

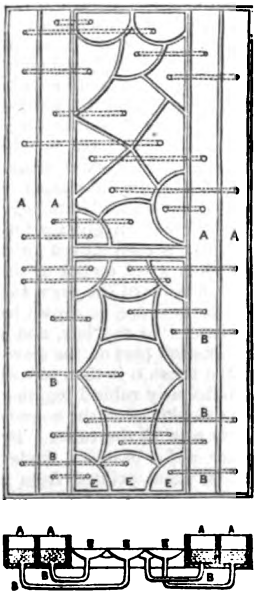

Where colours are required to melt into one another, technically called rainbowed (*fondus*, Fr.), the following apparatus is used. A A (*fig.* 349) is a rectangular frame of wood, about 6 inches deep, 2 feet long, and about 1 foot broad. On this frame is stretched, by means of small hooks, a woollen cloth, and the frame then laid on the elastic surface of the usual *swimming tub*, the cloth downwards and pasted or gummed to the oilskin cover of the tub. At one end is now put the colour reservoir B B, which

349

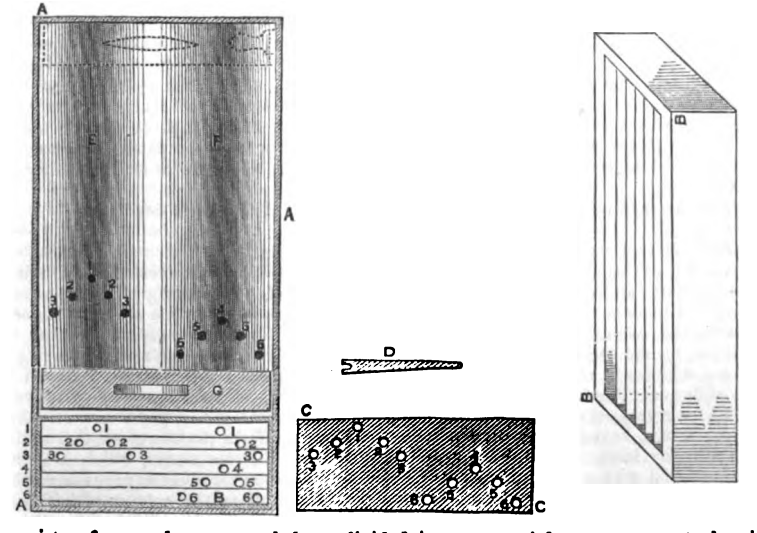

consists of a wooden or metal box, divided into water-tight compartments longitudinally by strips of thin metal; this box is of such a width as to fit easily into one end of the frame, and resting on a board of the same size, fixed across the frame; the

depth of the box may be about 4 inches, and the width about 8 inches; but this is regulated by the number of colours to be blended or *rainbowed*. A semi-circular piece of wood, of nearly the same width as the frame, is covered with printer's blanket, and a handle formed on the top, so that the teerer can move it backwards and forwards. The colour lifter, C C, is a flat piece of wood just covering the colour box; on the under side of this are inserted wooden pegs, as D, at certain places determined by the width of the stripe of rainbowed colour and the number of shades composing it. These pegs are of turned wood, about $\frac{1}{8}$th of an inch thick at the small end, and about $\frac{3}{8}$ths of an inch at the thick end, this end being also recessed so as to lift more colour; they are nearly as long as the colour box is deep. In the figure, suppose it is desired to produce on the sieve two stripes, say E of dark-green in centre, and two shades of green at each side, and F of chocolate in centre, purple next, and drab next, at each side, the colour-box is filled thus:—in No. 1 compartment is put the darkest green; in No. 2, the medium green; in No. 3, the palest green; in No. 4, the chocolate; in No. 5, the purple; and in No. 6, the drab. The colour lifter is so studded with pegs, that when put in the colour-box, the pegs 1, 2, 3, 4, 5, and 6 respectively dip into their appropriate colours. The brush, or semicircular roller, G, is then moved up to the top, as shown in the dotted lines, the colour lifter being then lifted up out of the colour-box is held a moment till the colour has ceased dropping from the pegs, and then lifted over, and the pegs allowed to deposit the colour on the sieve, as shown by the black spots 1, 2, 3, 4, 5, and 6. The lifter is then returned to the box, and a fresh portion of colour lifted, and deposited, as before, at a different part of the sieve, the spots of colour being of necessity all in straight lines; the brush G is then moved backwards and forwards by the teerer till the colours are sufficiently rubbed together or blended at the edges. It is necessary to observe, that the thickness of the colours must be pretty uniform, and sufficiently thin to allow them to mix at the edges. By this means one colour is made to melt insensibly into another, and a beautiful shaded effect produced on the sieve, and consequently on the piece, when printed from a block dipped on it.

The Perrotine is a machine for executing block-printing by mechanical power; and it performs as much work, it is said, as 20 expert hands. It is in use in many factories in France and Belgium, in a very satisfactory manner; but there is reason to believe that there are none of them now working in this country. Three wooden blocks, from $2\frac{1}{2}$ to 3 feet long, according to the breadth of the cloth, and from 2 to 5 inches broad, faced with pear-tree wood, engraved in relief, are mounted in a powerful cast-iron framework, with their planes at right angles to each other, so that each of them may, in succession, be brought to bear upon the face, top, and back of a square prism of iron covered with cloth, and fitted to revolve upon an axis between the said blocks. The calico passes between the prism and the engraved blocks, and receives successive impressions from them as it is successively drawn through by a winding cylinder. The blocks are pressed against the calico through the agency of springs, which imitate the elastic pressure of the workman's hand. Each block receives a coat of coloured paste from a woollen surface, smeared after every contact with a mechanical brush. One man, with one or two children for superintending the colour-giving surfaces, can turn off about 30 pieces English per day, in three colours, which is the work of fully 20 men and 20 children in block-printing by hand. It executes some styles of work to which the cylinder machine, without the surface roller, is inadequate.

The annexed cuts are taken from the "Traité de l'Impression des Tissus," of M. Persoz.

Fig. 350 is a vertical section, and *fig.* 351 an elevation.

A cast-iron framework. B B B cast-iron tables, planed smooth, over which circulate the blanket, the backcloth, and the piece that is printed; C C C sliding pieces, to which the block holders 3, are screwed, and causing the engraved blocks, 2, to move alternately against the woollen surface, from which they receive the colours and the stuff to be printed, by the action of the arms 4 and 5, the supports of which, 6, rest on the frame A, and which act, through the medium of connecting rods, on the beams, 7, keyed to the slides C. The lower of these slides, being in a vertical position, takes by its own weight a retrograde movement, regulated by a counterweight. E E E are movable colour-sieves, keyed to connecting rods, and receiving from the power applied to the machine the kind of movement which they require. These sieves, which are flat, and covered with cloth on the surface opposite to the blocks, slide in grooves on the sides of the tables, and receive from the furnished rollers the colours which they afterwards transmit to the blocks. F F F are the colour troughs filled with colour, and furnished each with two rollers 8 and 10, the last of which, dipping into the troughs, are charged with colour, which they communicate to the roller 8, the latter being covered with woollen cloth; and these in their turn transmit their colour to the

Digitized by Google

sieves E, on which it is spread by the fixed brushes, 9. As it is important to be able to vary at pleasure the quantity of colour supplied to the sieves, and consequently to the blocks, the rollers, 10, are in connection with levers, 11, which, by means of

350

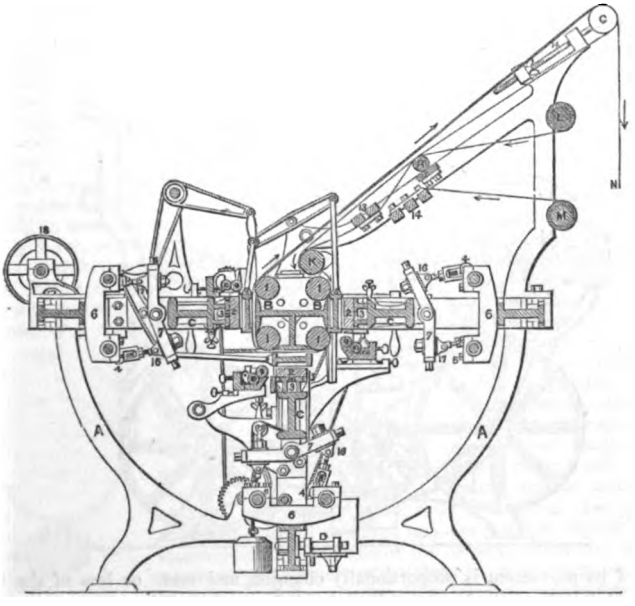

adjusting screws, bring them into more or less intimate contact with the rollers 8, and consequently vary the charge of colour at pleasure.

The blanket, backcloth, and fabric are circulated as follows:—At the four angles formed by the three tables, B, are rollers, 1, armed on their surface with needle points, which prevent the cloths from slipping as they pass round, and thus secure the regular movement of the stuff to be printed, a movement determined by the toothed wheels 21 (*fig.* 351) fixed at the extremities of the axes of these rollers. G is a roller for stretching the endless web, resting with the two ends of its axes on two cushions forming the extremities of the screws 12, by which the roller can be pushed further out when required, to give the cloth the necessary tension. H is another tension roller, supporting the blanket and backcloth. K is a roller which serves similar purposes for the blanket, the backcloth, and the fabric in course of being printed. T, the blanket, which in its course embraces the semicircumference of the roller G, passes over the roller H, and behind K, to circulate round the cylinders 1, and over the surfaces of the tables B. L is a cylinder from which the backcloth is unwound, being first stretched by the roller H, and then smoothed by the scrimping bars 13, from which it proceeds to join the blanket on arriving at the roller K. M a roller, from which the fabric to be printed is unrolled by the movement of the machine, first passing over the scrimping bars 14, and joining at K the blanket and backcloth, which it accompanies in their course till it arrives at the roller G, when it separates and passes off in the direction of the line N, to the hanging rollers, where it is dried.

The machine is put in movement, either by a man with a winch-handle, or by power communicated by a strap which passes over the pulley 18. This pulley has several diameters, so as to give several speeds; it is loose on the driving shaft, and carries catches which lock into those of a sliding catch-box on the shaft, when the machine is to be put in movement. The movement of the machine is intermittent because the printing is intermittent; moreover, it must be so regulated that the fabric advances a distance exactly equal to the breadth of the blocks, and that it moves forward whilst the sieves are charged with colour from the rollers 8 8. This result is obtained by means of a regulator, or dividing wheel 20. The wheels 21, fixed at the extremities of the axis of the cylinders 1, and having each the same number of teeth, receive their movement from a central wheel toothed in the same manner, and placed behind the wheel 20. This last receives an alternating motion from a rack,

Digitized by Google

24, fixed in a copper piece, 25, and which rises and falls alternately, being keyed at its lower end to one of the spokes of the wheel 28. By varying the position of the point at which the end of the rack is connected with the spoke 26, the length or

351

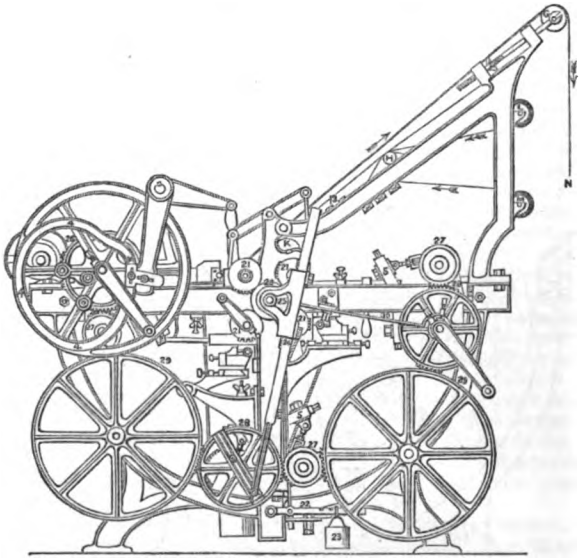

range of its movement is proportionally changed, and more or less of the teeth of the wheel 20 are made to pass, which renders proportionally, greater or less, the advance of the cloth at each movement; and this is further regulated by a ratchet wheel placed at D. At each half turn of this last, the lever 22 raises the catch or pallet, and throws out of gear the wheels 21 during the other half turn; but as in the working of these wheels there would be inevitably a backward movement, this is prevented by a break, consisting of a pulley, mounted on the shaft of the axis of the wheel 20, and a brass wire which after making a turn and a half, or two turns, on this shaft, is stretched by the weight 23, which offers a sufficient resistance to any recoil. The slides or block-holders are put in motion by the wheels 27 and 28, gearing with the larger wheel 29. And to vary their action at pleasure, both for causing the blocks to bear more or less strongly on the sieves, so as to be more or less charged with colour, and likewise for attaining the exact pressure, which suits best for the colour to be laid on, it is sufficient to move the points of junction, 16 and 17, to a greater or less distance from the point marked 15, which constitutes the centre of oscillation of the beams that work the slides. The movement of the sieves is controlled by that of the cam 11. 30, which works them all three by putting in motion a shaft with which they are respectively keyed. The furnishing rollers receive their movement from gearing with pinions on the axes of the rollers 8 8. The general working of this complex machine remains to be described. When put into regular motion, and the three blocks have delivered their impression exactly at the same instant, three simultaneous movements then commence.

1st. The stuff advances a distance exactly equal to the breadth of the blocks, and with it the blanket and backcloth, so that the portion of the fabric which leaves the third block behind it. is fully printed; that which was under the second advances opposite the third; that which was under the first, moves along to the second; and a fresh breadth of white or imprinted fabric arrives opposite the first. 2nd. While the cloth is advancing as above stated, the sieves take the place which they occupy in the section, *fig.* 350, that is to say, the first on the right hand rises, the second moves from left to right, the third descends, and in this movement all three press slightly on the furnishing rollers 8, from which they receive the colour, which has been spread uniformly by the brushes 9. 3rd. In the meantime, the slides, or blockholders, by a forward movement, push the blocks against the sieves, to charge them with colour, and the blocks at the same time receive from the slides a gentle backward movement, during which the sieves deviate from their position; the blocks then return upon them, and

Digitized by Google

are drawn back again after being applied to a new part of the colour surface. When these simultaneous movements have taken place, the action of the machine proceeding without intermission, the sieves move back from before the blocks, and these are pushed up against the latter, printing the position of the fabric that is stretched upon them. This brings the machine to that position at which the description commenced; and this succession of movements is renewed and repeated as long as the operation lasts; the printer having it always in his power to suspend the advance of the stuff whilst the working of the blocks and sieves continues, so that the colour may be re-applied to the same part of the fabric as often as may be required for a good impression.

There have been several attempts at block-printing by machinery in this country, amongst which the machines of Mr. Joseph Burch have been most successful; but from one cause or another, none of them have ever come into general use, and it is unnecessary therefore to particularise them.

The copper-plate printing of calico is almost exactly the same as that used for printing engravings on paper from flat plates, and being nearly superseded by the next machine, need not be described.

The cylinder printing machine is one by which one or more colours are rapidly printed from engraved copper cylinders or rollers by the mere rotation of the machine, driven by the agency of steam or water. The productive powers of this printing automaton are very great, amounting for some styles to a piece of 30 yards per minute, or a mile of printed cloth per hour. *Fig.* 352 will give the reader a general idea of this elegant and expeditious plan of printing.

352

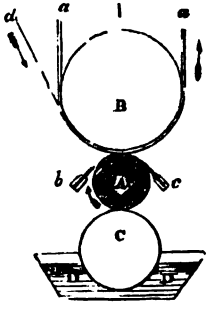

The pattern is engraved upon the surface of a hollow cylinder of copper, and the cylinder is forced by pressure upon a strong iron mandrel, which serves as its turning shaft. To facilitate the transfer of the impression from the engraving to the cotton cloth, the latter is lapped round another large cylinder, rendered elastic by rolls of woollen cloth, and the engraved cylinder presses the calico against this elastic cushion, and thereby prints it as it revolves. Let A be the engraved cylinder mounted upon its mandrel, which receives rotatory motion by wheels on its end, connected with the steam or water power of the factory. B is a large iron drum or roller, turning in bearings of the end frames of the machine. Against that drum the engraved cylinder A is pressed by weights or screws; the weights acting steadily, by levers, upon its brass bearings. Round the drum B the endless web of felt or blanket stuff *a a*, travels in the direction of the arrow, being carried round along with the drum B, which again is turned by the friction of contact with the cylinder A. C represents a clothed wooden roller, partly plunged into the thickened colour of the trough D D. That roller is also made to bear. with a moderate force, against A, and thus receives, by friction, in some cases, a movement of rotation. But it is preferable to drive the roller C from the cylinder A, by means of a system of toothed wheels attached to their ends, so that the surface speed of the wooden or paste roller shall be somewhat greater than that of the printing cylinder, whereby the colour will be rubbed, as it were, into the engraved parts of the latter.

As the cylinder A is pressed upwards against B, it is obvious that the bearers of the trough and its roller must be attached to the bearings of the cylinder A in order to preserve its contact with the colour-roller C. *b* is a sharp-edged ruler of gun-metal or steel, called the *colour doctor*, screwed between two gun-metal stiffening bars; the edge of which wiper is slightly pressed at a tangent upon the engraved roller A. This ruler vibrates with a slow motion from side to side, or right to left, so as to exercise a delicate shaving action upon the engraved surface, as this revolves in the direction of the arrow. *c* is another similar sharp-edged ruler, called the *lint doctor*, whose office it is to remove any fibres which may have come off the calico in the act of printing, and which if left on the engraved cylinder, would be apt to occupy some of the lines, or at least to prevent the colour from filling them all. This *lint doctor* is pressed very slightly upon the cylinder A, and has no traverse motion.

What was stated with regard to the bearers of the colour trough D, namely, that they are connected, and moved up and down together, with the bearings of the cylinder A, may also be said of the bearers of the two doctors.

The working of this beautiful mechanism may now be easily comprehended. The web of calico, indicated in the figure by the letter *d*, is introduced or carried in along with the blanket stuff *a a*, in the direction of the arrow, and is moved onward by the pressure of the revolving cylinder A, so as to receive the impression of the pattern engraved on that cylinder.

Digitized by Google

Before proceeding to describe the more complex machines which print upon cloth several colours at one operation, by the rotation of so many cylinders or rollers, it is advisable to give some insight into the modern method of engraving the copper cylinders. These were formerly engraved altogether by hand, in the same manner, and with similar tools, as the ordinary copper-plate engravings, till the happy invention of Mr. Jacob Perkins, of America, for transferring engravings from one surface to another by means of steel roller dies, was with great judgment applied by Mr. Lockett to calico-printing, so long ago as the year 1808, before the first inventor came to Europe with the plan. The pattern is first reduced or increased in size to such a scale, that it will repeat evenly over the roller to be engraved; and as rollers are of varying diameters, owing to old patterns being turned off, &c., this drawing to scale has to be adopted for every roller, the exact circumference of the roller being taken and the pattern arranged in accordance with this. This pattern is next engraved in intaglio on a roller of softened steel, which is of such a size that one repeat of the pattern exactly covers its surface; generally these rollers are about 3 inches long and from ½ an inch to 2 or 3 inches in diameter. The engraver aids his eye with a lens when employed at this delicate work. This roller is hardened by heating it to a cherry-red in an iron case containing pounded bone-ash, and then plunging it into cold water: its surface being protected from oxidisement by a chalky paste. This hardened roller is put into a press of a peculiar construction, called the clamming machine, where by a rotatory pressure, it transfers its design to a similar roller in the soft state; and as the former was in itaglio, the latter must be in relievo. This second roller being hardened, and placed in the engraving machine, is employed to engrave by indentation upon the full sized copper cylinder the whole of its intended pattern. The first roller engraved by hand is called the *die*; the second, obtained from it by a process like that of a milling tool, is called the *mill*. By this indentation and multiplication system, an engraved cylinder may be had for 1*l*., which engraved by hand would cost 5*l*. The restoration of a worn-out cylinder becomes extremely easy in this way; the mill being preserved, need merely be properly rolled over the copper surface again. The die roller is made of such a size that its circumference is exactly a fractional part of that of the mills, say one-half, one-third, one-fourth; then in the clamming machine the die revolving in contact with the mill repeats its surface so many times on the surface of the mill. By this means as little skilled labour as possible is used. When a pattern having more than one colour is to be engraved, the drawing is reduced to scale as before, each roller being made of the same diameter; then a tracing is made of each colour, which is engraved on a separate die and mill—a mill being required for each colour—which engraves its separate copper roller; when these rollers come to be worked in the printing machine, each roller fits its part of the pattern into place, and the original pattern is reproduced. The annexed drawings of engraving machinery are from those made by Messrs. Gadd and Hill, of Manchester, to whose courtesy are due also the drawings of the printing machines and their drying apparatus hereafter described. *Fig.* 353 is a front view of the clamming-machine, and *fig.* 354 is a side view of the same. A A cast-iron frame-work; B a headstock screwed on the frame work A; C a sliding piece, capable of movement from back to front on the headstock B; the position being determined, it is secured by the screw shown under C; the roller D revolves in bearing attached to the sliding piece C; the supporting piece E has a motion backwards and forwards on the supporting piece O, which moves up or down; *e* is a small *steel roller*, which again supports the die roller seen in the centre of the drawing. The roller F is of softened steel called the mill, which revolves in bearings attached to the head stock, which has a sliding movement on the slide block H, which is moved from right to left by the screw I, worked by the lever K. L is a pinion gearing into the toothed wheel N, and turned by the winch handle M; the shaft P has a sliding movement

353

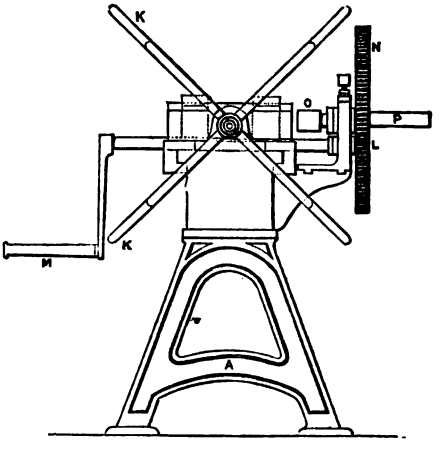

Digitized by Google

through the wheel N, and carries the boss O, which has a square aperture to receive the centre of the mill, which is squared to fit into it. *q* is a screw used to tighten and keep in the desired position the saddle pieces E *o*, which together are pushed up or down to meet the varying size of the die.

354

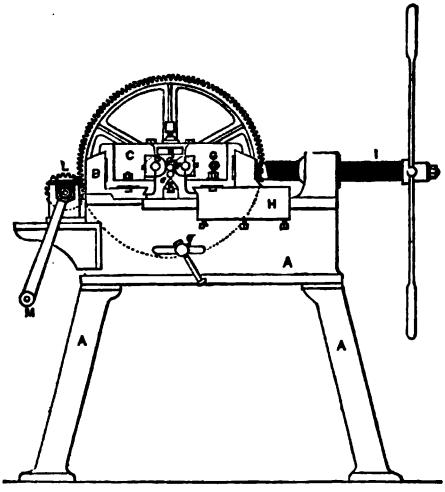

The die *d* having been hardened, is inserted in the machine resting on the auxiliary hard steel roller *e*, which again rests on the supporting piece E; the die being in contact with the hard steel roller D, the soft steel roller or mill E is next forcibly screwed up in contact with the die, rotatory motion being given to the roller D by the toothed wheels, those portions which are in intaglio in the die become in relief on the mill. It is then ready for the machine engraver to transfer its pattern to the copper roller. *Fig.* 355 is an elevation of the engraving machine. A A is a mandrel which carries the copper roller B; the mandrel is fitted in the universal joint C, which is secured on the shaft of the wheels D D, which are a double pair of wheels for the purpose of altering the speed from fast to slow, and are moved by the winch-handle or pulley. The lever E is fitted, works loosely on the shaft, on which is keyed the wheel F. By means of the screw G, the lever E can be secured to the wheel F. By this contrivance the motion termed *rocking* is effected, that kind of motion being

355

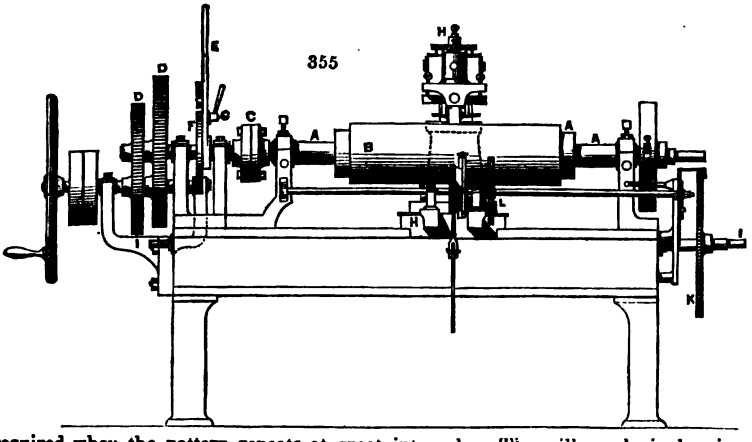

required when the pattern repeats at great intervals. The mill works in bearings attached to the pillar and carriage H H, which is moved from right to left by the screw I I; the mill is forcibly pressed against the copper roller by a *weighted lever* which forces down the bearings of the mill in the pillar H; this lever cannot be shown in the figure, but is at right angles to the roller. The mill being in contact with the copper roller, revolves with it simultaneously on the roller being moved by the wheels D D or the lever E, and consequently impresses or engraves its pattern on the copper roller; when the mill has traversed the circumference, it is then moved to its next relative position by the screw I, which moves the pillar and carriage H; the exact distance the mill moves is determined by an index on the wheel K, which is divided into segments, corresponding with the number of repeats laterally on the roller. The apparatus shown at L is used occasionally when the machine is employed for turning off an engraved pattern, which, however, is generally performed in a slide lathe, and is unnecessary further to describe here.

Digitized by Google

Etching by nitric acid is largely employed in engraving for calico-printing, the following being the process:—The copper roller is first coated all over with a thin coating of bituminous varnish, and when dry put in a machine which rules lines about the $\frac{1}{33}$ of an inch apart all over the surface, the lines all running in one direction and diagonally to the axis, the varnish being cut through by the ruling point. The pattern is then traced on in the usual manner. All the parts that are intended to be blank, are then painted in with the bituminous varnish by hand; generally the outlines are put in by skilled operatives, the filling-in being done by girls or boys; when dry, the roller is immersed horizontally in a bath of diluted nitric acid, and kept there for a few minutes, during which time the acid attacks and deepens the lines which are unprotected by varnish; the roller is then removed, well washed with water, and the varnish removed by oil of turpentine; the pattern is found etched with diagonal bars, which in a good engraving should be nearly level with the blank parts of the roller, the interstices being sufficient to supply the colour. The outlines of the pattern are generally completed with the graver. This mode is well adapted for giving a deep engraving, which is necessary for printing coarse fabrics. When a pattern is worn down it is easy to renew it, by simply painting up the blank parts and etching deeper by nitric acid.

In 1854, William Rigby patented a mode of transferring patterns to copper rollers by a modification of the pentagraph. The pattern to be engraved being drawn on an enlarged scale, and put on a bed curved to an arc of a circle, a tracer being then moved over all the lines of the pattern by a beautiful, but simple, arrangement of machinery, a tracer executed, on a varnished roller, a reduced copy of the pattern on the circular bed. In a patent, dated 1st January, 1857, Rigby introduced an improvement whereby any number of tracers could be simultaneously worked on the roller, by the simple movement of the tracer on the pattern; thus all the repeats of the pattern could be executed at once. The method is becoming very extensively adopted, and, independent of several large printers having begun engraving on this system, a very large establishment, "The Burlington Engraving Company" has been commenced with a view to engrave on this principle. All descriptions of engraving cannot however be done on this plan. The process is the following:—

The pattern is first enlarged to five times its size: this is conveniently done by the camera. The paper pattern being put in the camera, an enlarged copy is thrown on a table in a darkened room, and is there easily traced on paper. It is then transferred to a thin zinc plate, and this plate is then engraved with a coarse graver, the lines of the engraving being adapted for the tracing point to work easily in. The zinc pattern, if of a two- or more coloured pattern, is coloured for the guidance of the operative. It is then laid on the curved bed of the pentagraph machine, and a varnished roller being mounted in the machine, a number of tools, corresponding in number to the repeats laterally, and carrying diamond points, are placed in contact with the roller. The operative then carries the tracer successively into all the lines of the pattern, a lever allowing the points to touch the roller only when necessary. The pattern is thus traced by the etching points on the roller one-fifth of the size of that on the zinc plate, or the same size as the paper drawing. The roller is then painted and etched with nitric acid, as before described. A reference to the annexed engravings will more clearly illustrate this system.

In *figs.* 356 and 357, *a* represents the cylinder to be operated upon; and *b*, the bed or table for the reception of the enlarged pattern or original device; *c*, the tracer, which is made to traverse in the direction of the arc of the bed or table, and by means of its connection with the carriage *h*, the rail *d*, and the connecting arms *e e*, communicates part of a revolution to the bar or axis *f*, and thence to the cylinder through the dies *g g*, on which the cylinder rests. The cylinder being thus moved in a rotary direction, will receive from the tools in contact with it diminished copies of the transverse lines which may have been gone over by the tracer on the enlarged pattern or device. The tracer *c* being connected with the carriage *h* which travels along the rail *d*, will, in passing over a line running longitudinally with the machine, communicate a partial revolution to the wheel *l* by means of the bands of steel *j j*, similar to watch springs, which pass under and over the small wheels *k k*, and are passed round and secured to the large wheel *l*, which is mounted on the vertical shaft *m*, carrying at its upper end the small drum m^1, round which passes the steel band *n*, secured at each end to the pieces *o o*. These pieces are secured by bolts or screws to the sliding frames *p*, to which the upper tool bar or bars *q*, which support the graving, drilling, or etching tools *r r r*, are fixed. Thus any motion of the large wheel *l* will be imparted to the drum m^1, and by it through the steel band *n* to the sliding frames *p* and the tool bars *q*, and, consequently, to the tools *r*, thereby transferring to the cylinder diminished copies of any lines in a lateral direction that may be gone over by the tracer. It will be evident that the result of the simultaneous action or compounding of the two

Digitized by Google

356

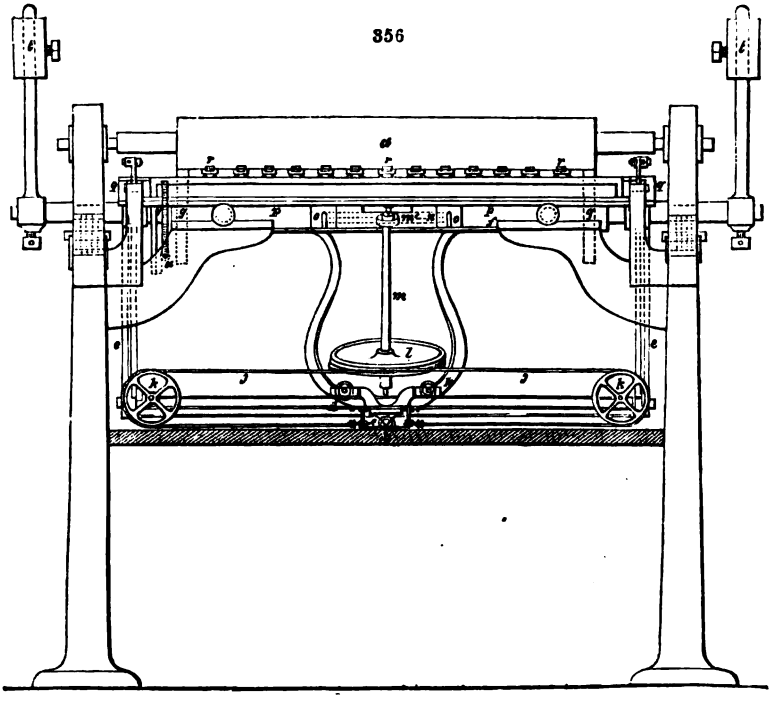

357

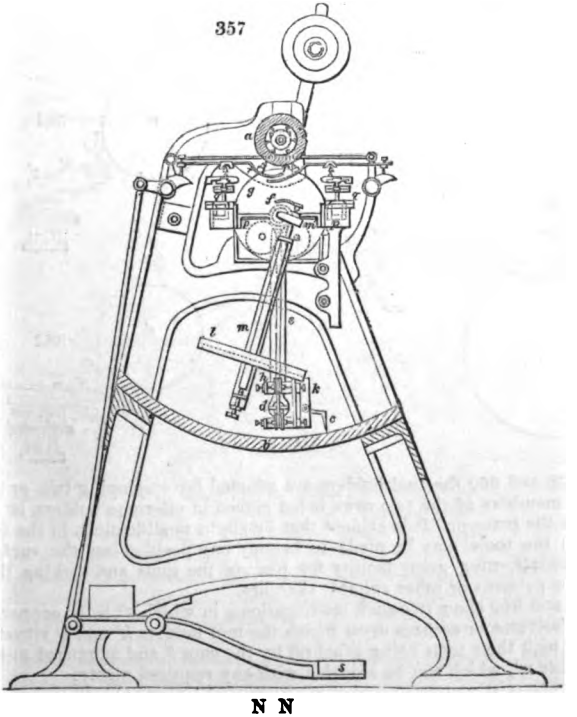

Digitized by Google

motions, by passing the tracer over any diagonal or curved line, will be the production of a diminished copy of such diagonal or curved line by each of the tools. *s* is a treadle with a vertical link and appropriate leverage, by which the tools may be brought in contact with the cylinder when required; *t t* are counterbalance weights for the connecting arms *e e*, lower rail *d*, &c.; *u* and *v* represent a worm and wheel for the purpose of giving the roller an extra partial revolution when it is required to engrave upon a different portion of the circumference of the cylinder; and to effect a similar purpose in the longitudinal direction, the tool bar may be made to shift in its sliding frame with an adjusting screw attached to it, by means of which any degree of exactitude in the setting of the tools may be obtained.

In the machine, as shown in the accompanying drawings, the design executed on the cylinder would bear the same proportion in size to the enlarged pattern on the bed or table that the small drum m^1 bears to the large wheel *l*, and the radius of the discs *g g*, to the radius of the circular bed; but by the adaptation of wheels and discs of different diameters, any desired proportion between the pattern engraved and the enlarged pattern may be adopted.

In *fig.* 358, representing a mode of giving an alternate reverse action to the tools and bars, a^1 are the bars, to one of which a longitudinal to-and-fro motion is given, and a reverse motion given at the same time to the other bar by means of the links or rods b^1, connected to the beam or lever c^1, working on the pin or fulcrum d^1 attached to the framing e^1. This arrangement of the machine is suitable for turnover patterns.

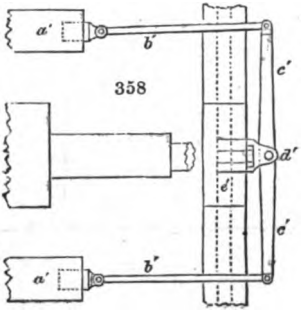

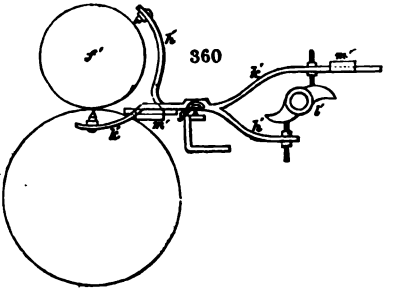

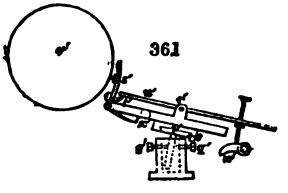

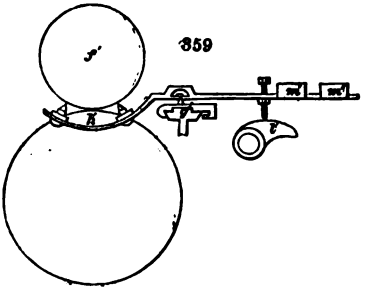

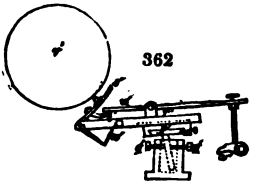

In *figs.* 359 and 360 the tool holders are adapted for employing two or more rows of tools, the members of the two rows being placed in alternate holders, or otherwise, according to the pattern. It is evident that by slight modifications in the form of the tool holders the tools may be made to occupy any position on the surface of the cylinder, thus affording great facility for placing the tools and making them applicable for step patterns or other suitable sketches.

Figs. 359 and 360 show two such modifications, in which f^1 is the copper roller; g^1 the line of fulcrums or centres upon which the tool holders h^1 and k^1 vibrate, the said tool holders with their tools being lifted off by the cam l^1 and advanced to their work by the weights m^1, which can be adjusted with any required nicety.

Digitized by Google

In *figs.* 361 and 362 is shown another arrangement of tools with swivel bars, the swivel bars being show at p^1, and placed and held in the desired position by the screws q^1. To the bar is attached the carriage r^1, to one end of which is connected the tool holder s^1, in which is a projection t^1, acted upon by a beam or lever u^1 working on a fulcrum in the carriage r^1. The tool is lifted off the roller v^1 by means of the cam w^1, and returned to its work by means of a spring or Indian-rubber band x^1 attached to the slide r^1. It will be perceived that, independently of the slot or slide in the tool holder, great change of position is obtained by simply shifting the carriages longitudinally.

The "excentric engraving," or etching, of Mr. Locket, of Manchester, produces on a varnished roller the most curious variety of configurations, by means of diamond points, moved by very elaborate machinery, the patterns being the result of excentric movements given to the tracer by a combination of machinery. In this case the exact effect that will be produced by any given modification of the machine cannot be determined, though an approximation can be made; but when a pattern is produced, and notes taken of the relative positions of the wheels, &c., the same pattern can at any time be reproduced. This system is applicable principally to groundworks, or, as they are termed, "covers." It is impossible in the scope of this article, to give a clear idea of this machine, as a very elaborate set of drawings would be required.

With regard to the 2 and 3-coloured machines, we must observe, that as the calico in passing between the cylinders is stretched laterally from the central line of the web, the figures engraved upon the cylinders must be proportionally shortened, in their lateral dimensions, especially for the first and second cylinder.

Cylinder printing, although a Scotch invention, has received its wonderful development in England, and does the greatest honour to this country. The economy of labour introduced by these machines is truly marvellous; one of them, under the guidance of a man, to regulate the rollers, and the service of two boys, to supply the colour troughs, &c., being capable of printing as many pieces as nearly 200 men and boys could do with blocks.

In mounting two or more cylinders in one frame, several adjustments become necessary. The first and most important is that which ensures the correspondence between the parts of the figures in the successive printing rollers, for unless those of the second and subsequent engraved cylinders be accurately inserted into their respective places, a confused pattern would be produced upon the cloth as it advances round the pressure cylinder.

Each cylinder must have a forward adjustment in the direction of rotation round its axis, so as to bring the patterns into correspondence with each other in the length of the piece; and also a lateral or traverse adjustment in the line of its axis, to effect the correspondence of the figures across the piece; and thus, by both together, each cylinder may be made to work symmetrically with its fellows.

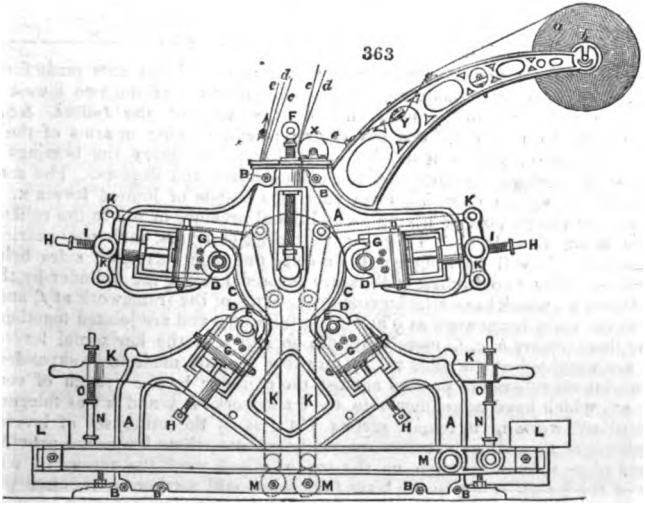

Fig. 363 is an end elevation of a 4-colour printing machine, and *fig.* 364 is a section of same: the same letters of reference refer to both. A is the cast-iron frame-

Digitized by Google

work, bolted to a corresponding framework by the bolts B, with a space of from 3 to 4 feet between; C is the pressure cylinder, about 2 feet diameter, of iron, but hollow, and between 3 and 4 feet long, according to the sort of cloth the machine is intended to print; D are the copper rollers, the width of a piece of cloth; E are wrought-iron mandrels on which the copper roller is forced by a screw press, the mandrel being about 4 inches diameter where the roller fits on, but with journals of smaller diameter. The roller is made with a projecting piece inside, about ½ an inch broad, and ¼ of an inch deep, extending all the width of the roller; this tab, as it is called, fits in a slot cut in the mandrel, which causes it to turn without slipping on the mandrel; the pressure cylinder or bowl C, rests with its gudgeons in bearings or bushes, which can be shifted up and down in slots of the side cheeks A; these bushes

364

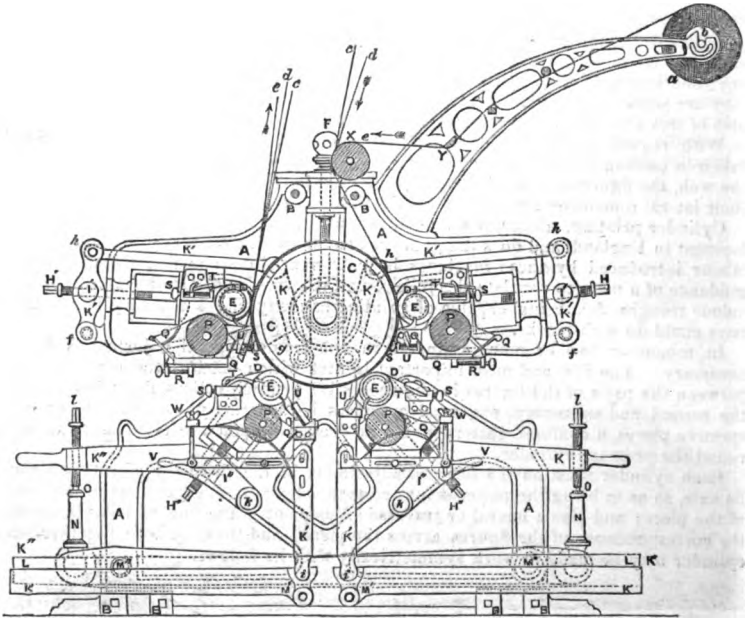

are suspended from powerful screws F, which turn in brass nuts made fast to the frame A. These screws counteract the pressure upwards of the two lowest rollers, and enable the bowl to be lifted out of the way of the rollers, &c., when they have to be removed. G G are sliding pieces, moving in arms of the framework, by means of screws H H. These sliding pieces carry the bearings of the mandrels; to them are also attached the colour boxes and doctors. The screws H′ work in female screws I′, which form part of a system of jointed levers K. These levers are for the purpose of giving an additional pressure or nip to the rollers D, the pressure being also elastic. There are four pairs of levers, each pair bearing upon one mandrel. It will be sufficient to describe one side only, both sides being precisely alike. The two highest rollers are pressed against the cylinder by the compound levers K′, which have attachments to the arms of the framework at *f*, and to the inside of the main framework at *g* and M′ as fulcrums, and are jointed together at *h h*, but the bent levers *h*, *g*, *i*, merely fit into sockets *i*, of the horizontal levers M′ K′, which are weighted at the ends K′, by movable weights made to fit expanded parts. The two lowest rollers are pressed against the cylinder by the system of compound levers K″, which have attachments to the framework at *k* and M″ as fulcrums; the screws H″ H″, working in female screws I″ I″, as in the other set of levers. For convenience of removing the rollers, colour boxes, &c., these levers are provided with a hinged piece N, in a socket O, on the top of which work the screws *l l*, which, by means of the female screw in the lever *k* K″ serve still further to regulate the pressure; the lever K″ *k* is shown as when the machine is printing, but when the rollers, &c., are to be removed, the lever is lifted by the handle, and the hinged piece N pulled over, the lever with its burden being then lowered down; the weighting of these levers,

Digitized by Google

which are partly outside the machine, is best seen in *figs.* 363–364 where L are the weights, Q are colour boxes, the sides and bottom of which are made of sheet copper, and the ends of gun-metal; in each end is a slot, which receives the brass journals of the wooden furnishing rollers P, which are wrapped with a few folds of coarse calico, and, by revolving in the colour and against the engraved rollers D, supply it equally all over with the colour: the superfluous colour is next wiped off by the colour doctors T. These doctors are thin blades of steel or brass, which are mounted in doctor-shears, or plates of metal screwed together with bolts; the shears have journals which rest in bearings movable backwards and forwards by the screws S; the doctors are kept in close contact with the engraved roller by levers and weights, for the way of arranging which, see *fig.* 365, where A, B, C, are the levers attached to the doctor shears. On the ends of these levers, weights are hung, and by this means the doctors are pressed forcibly against the roller.

365

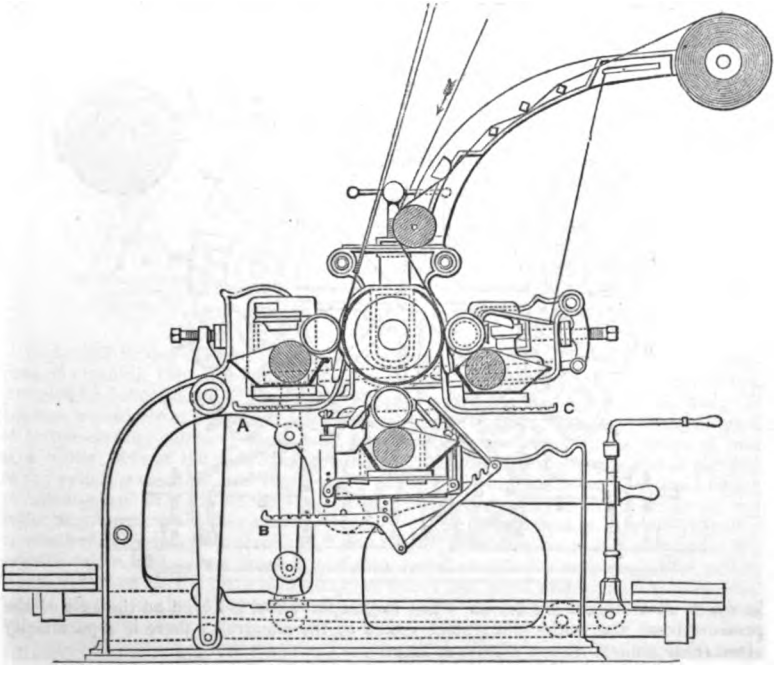

After printing the pattern on the piece, the roller D is cleaned from threads or dust by the lint doctors U, pressed against the roller by the screws S, *fig.* 364; any loose threads from the piece are prevented by the lint doctors from going into the colour, and consequently under the cleaning doctors, where by preventing them from perfectly wiping the blank parts of the roller, smears on the piece would ensue. The colour boxes are mounted on wooden boards, to give them greater strength, and are tightened up against the roller, by the screws R R and W W; the lower pair of colour boxes are removed from the copper roller when not in use by the handles V, after detaching the screws W W. There is a toothed wheel slipped on to each mandrell, working into a toothed wheel on the axis of the furnishing roller, which ensures the copper roller and furnishing roller always turning together. By means of an excentric, fixed on the axis of the pressure bowl, and connected with each cleaning doctor, a regular vibratory movement is given to them, which prevents the doctor being worn down unequally. Sometimes for the highest rollers, and especially in machines of more than four colours, the cumbrous colour box is dispensed with, and a doctor inserted in a curved frame is applied to the roller instead. In this arrangement the doctor forms the bottom of the colour reservoir, and is pressed strongly against the roller, the curved frame stopped off at the sides with a piece of copper curved to fit both roller and frame, and which is padded with a piece of folded cotton cloth, forms the colour box. This doctor box takes but little room, and wastes but little colour, but is

Digitized by Google

only used for the uppermost rollers. Neither of these arrangements can be shown in *fig.* 364. The roll of pieces is shown at *a*, wound on the wooden roller *b*, the axis of which rests in bearings at the end of the arms. The piece is conducted under a small wooden roller, next over a square iron bar, and next against the scrimping bar Y, thence over the wooden roller *x*, round which also pass the grey piece *d*, and the woollen blanket *e*. The scrimping bar is a bar of iron or brass, with curved surface, furrowed by grooves, cut right and left from the centre, as in *fig.* 366. In passing over this bar, the cloth is stretched equally from the centre, and any folds or creases removed. In order that the piece may be constantly stretched, the roller *b* is provided with a wooden pulley, round which passes a leather strap, one end of which is made fast to the framework, and to the other is attached a weight; the friction of the strap against the pulley causes a retarding action of the piece, and consequently keeps it stretched.

366

Fig. 367 is an elevation of a 12-colour machine, which is inserted to show the way

367

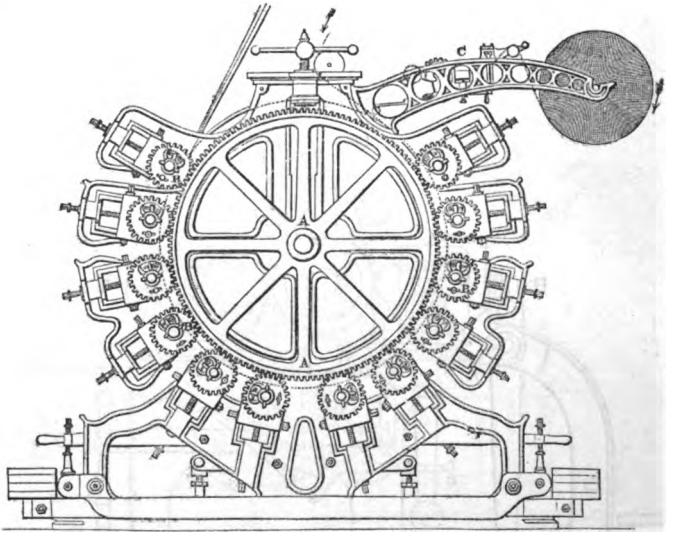

in which all machines are driven. The large spur wheel is keyed on the axis of the pressure bowl, and works into pinions staked on the mandrels; there is a peculiarity about these pinions, or box wheels, as they are called, which may be observed in *fig.* 367, but is shown on an enlarged scale in *fig.* 368, which is a box-wheel detached. This wheel may be compared to the fine adjustment of a microscope, as by means of it the rollers receive the final and delicate adjustment so as to register accurately with one another. It consists essentially of two parts: the disc A, carrying the cogs; and the hollow axis B, carrying a disc at one side, and the connecting piece and screw C D at the other. The part A A, or shell of the wheel, is about 10 inches diameter and 3 inches broad across the cogs; one side of the shell is cut out to receive the plate shown by dotted lines. This plate is provided with the hollow axis B, which comes through the shell, and projects about 3 inches, the part projecting being cut through at F F; fastened to it also is the connecting piece C, in which works the screw D; this screw just fits in two projecting lugs G G, cast on the shell A. The screw nut E

368

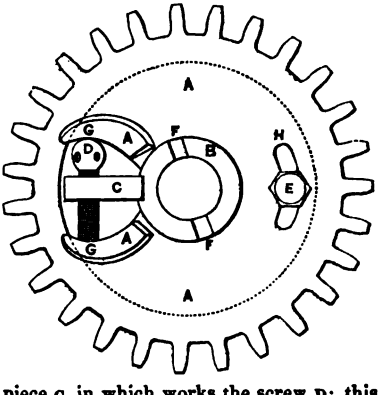

Digitized by Google

forms part of the axle piece, and works in the slide H. When this wheel is used, it is slipped on the mandrel which carries the copper roller, and a cotter is driven through the cleft axle and through a corresponding cotter hole in the mandrel, thus firmly connecting the mandrel and wheel; the mandrel and roller being put in their place in the machine, the cogs of the mandrel wheel work into the main driving wheel, as shown in *fig.* 367. The coarse adjustment of the rollers being made when putting them in their places, the fine adjustment is made by turning the screw D. It is obvious that the screw D, by pressing against the lugs G of the shell A, which is geared into the driving wheel, will turn the mandrel and roller without moving the cogs. By this arrangement, any roller may be moved round about 2 inches at any time after being fixed in its place. All machines of more than one colour are fitted with these wheels, which indeed are indispensable.

369

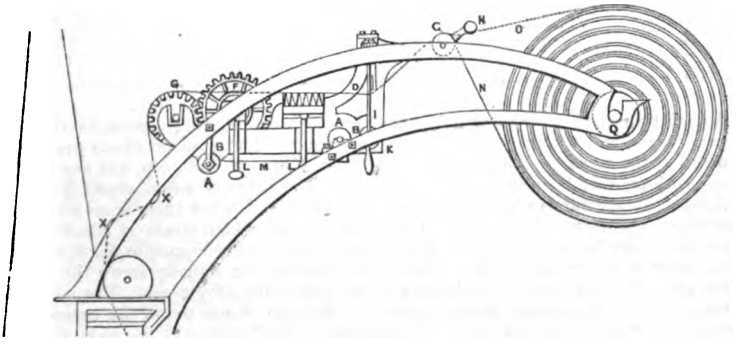

In *fig.* 367 is also shown a piece of apparatus attached to the framework for the purpose of cleaning the cloth from dust and threads before printing. This apparatus, patented by John Coates, of Manchester, is shown on an enlarged scale in *fig.* 369. It consists essentially of a brush and a roller, covered with card or the wire material used in cotton-carding engines; these, with the gearing, are attached by the straps of iron B B to the ends of the rods A A, care being taken that the roller G is placed parallel to the printing machine, and the apparatus sufficiently high to be over the head of the person engaged at work behind the machine, and convenient for him to reach out the roller and brush, when they require cleaning. The piece passes over the small roller C, whether delivered from the "roll," or "beam," as at N or O; it then goes under the wooden rail D, and over a brush E, and afterwards, at F, it comes on to the card roller, which is turned by the plain roller G (over which the piece passes) the contrary way to the piece, so that the card catches any loose material, and prevents it again adhering to the piece.

Four, five, and six-colour machines, similar to the above, are now at work in many establishments in Lancashire, which will turn off a piece of 28 yards per minute, each of the three or four cylinders applying its peculiar part of the pattern to the cloth as it passes along, by ceaseless rotation of the unwearied wheels. At this rate, the astonishing length of one mile of many-coloured web is printed with elegant flowers and other figures in an hour. When we call to mind how much knowledge and skill are involved in this process, we may fairly consider it as the greatest achievement of chemical and mechanical science.

The general course of printing in thus performed:—The pieces to be printed are wound on a beam, and, last of all, a few yards of common coarse cotton or calico, kept for this purpose: this is for the printer to fit the pattern on, to save good cloth. The roll of cloth being put in its place behind the machine, the printer's assistant stations himself behind to guide the cloth evenly, and pluck off any loose threads he may see. The machine printer stands in front, and, after having fitted the pattern on the cloth, attends to supplying the colour boxes with colour, and regulating any misfitting or inequality in the printing. The machine then prints rapidly. After running through 30 or 40 pieces, the printer stops the machine, removes the doctors, and fills them anew to a bevelled sharp edge.

To prevent the blanket being too soon soiled, it is usual to run grey or unbleached pieces between the blanket and the white pieces. The blanket, grey, and printed pieces are dried separately. There are several ways of drying after the machine. The *fig.* 370 may be taken as representing a good and effective method. Behind the

Digitized by Google

printing machines there is a hot room, in which is fixed the bulk of the drying apparatus. This room is kept closed, and is ventilated so as to let out the steam, &c.; it is of necessity of much higher temperature than the printing apartment. Above

370

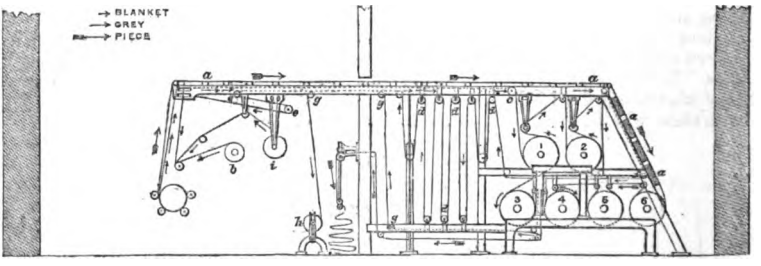

the printing machine is fixed a framework, which carries the supports for the rolls of grey pieces, and a long range of steam chests *a a*. These steam chests are the same width as the machine, about 1 foot broad and 3 or 4 inches deep, and are connected one with another by bent pipes at the end. The range of steam chests is continued through an aperture in the wall into the hot room, and below them is an arrangement of steam cylinders, turning on hollow axes, through which steam is admitted. The course of the blanket, grey, and piece, will be seen on reference to *fig.* 370 in which the shortest arrow shows the course of the blanket, the longest arrow the course of the printed pieces, and the middle-sized one that of the grey pieces. The white pieces leave the roll *b*, passing over a wooden roller, and thence round the cylinder along with the grey and the blanket. After receiving the impression, the piece passes over a small roller at the edge of the framework, and thence along the top of the steam chests, the roller being so regulated as to keep the pieces close to the chests, but not touching them. It passes along the straight length and down the incline; on leaving the chests, it passes round the cylinders Nos. 6, 5, and 4, being so stretched by rollers as to embrace nearly the whole of the cylinders; it then passes under the framework and up through another narrow aperture in the wall, being conducted through a *plaiting-down* apparatus, which has drawing rollers at the end of a pair of arms, which move in a segment of a circle, and so fold the piece backwards and forwards in a loose pile. The grey and the blanket, on leaving the cylinder, proceed together over a roller at the under side of the steam chests, along which they travel as far as the roller *c*, where they part company, the blankets passing down over the cylinders 1 and 2, thence under these cylinders and over and under the rollers *d d*, returning along under the steam chests round rollers *e e*, and so again into the machine. The grey pieces, after leaving the roller *c*, pass along the under side of the chests to the roller *f*, thence round the cylinder 3, the rollers *g g*, being finally wound on a beam at *h*. When the roll of grey pieces *i* is exhausted, the roll *h* is put in its place, the grey pieces being run through the machine two or three times, according as they are more or less stained, and then sent to the bleach house.

Scarcely any print works are without several 5 and 6-colour printing machines, and the printers of goods intended for hangings, which are generally of elaborate floral designs, employ machines capable of printing from 10 to 20 colours at once. These machines are necessarily of very large dimensions. *Fig.* 371 is an end view of a 20-colour machine, made by Messrs. Gadd and Hill, of Manchester, for Mr. Kay, of Castleton Print Works, and is employed in printing very beautiful floral patterns on woollen fabrics, in imitation of those produced by hand labour in France.

The system of turning cylinder machines, patented by Mr. Joseph Leese, possesses several advantages. In this plan a small high pressure oscillating engine is attached directly to the axis of the large cylinder, thereby dispensing with the heavy gearing and shafting required when machines are turned by a large stationary engine; the machine printer also has perfect command over the speed of the machine, and can fit the pattern, when it is turning very slowly, with more convenience than on the usual system. On this system also machines can be put down in any portion of the works, and are independent of the stationary engine.

In surface printing the cylinder or roller is in relief, just as the wooden blocks used by hand, and the manner of working them is shown in *fig.* 372, which is the section of an 8-colour surface machine of Gadd's. A A is the framework; B B the bowl or cylinder, which is hollow, and made with arms inside; C C are the surface rollers, sup-

Digitized by Google

371

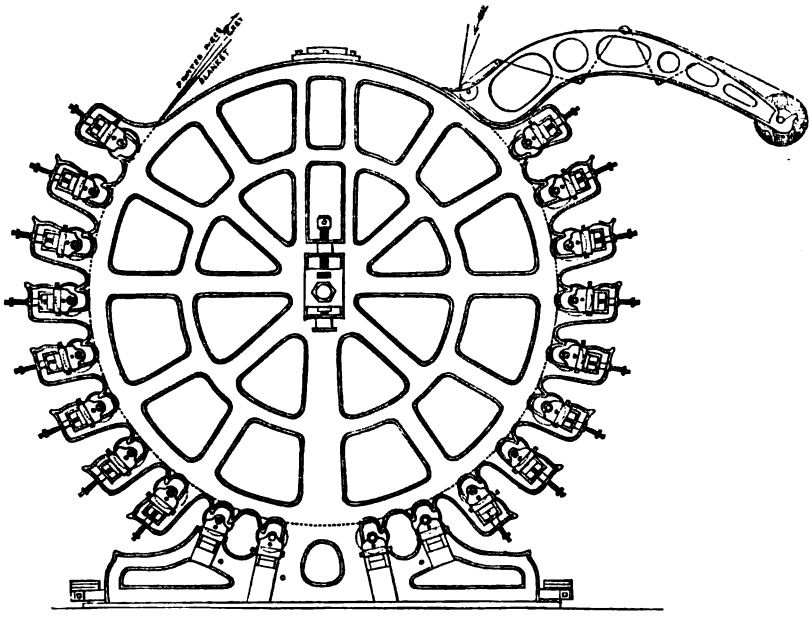

plied with colour by the endless web or sieve *f f*, revolving round the wooden tension rollers D D E; the roller E is screwed down so as to press the sieve on the furnishing roller F which revolves in the copper colour box G; the two tension rollers next to the surface roller move in slides, so that by means of the screw H, the sieve can be pressed against

372

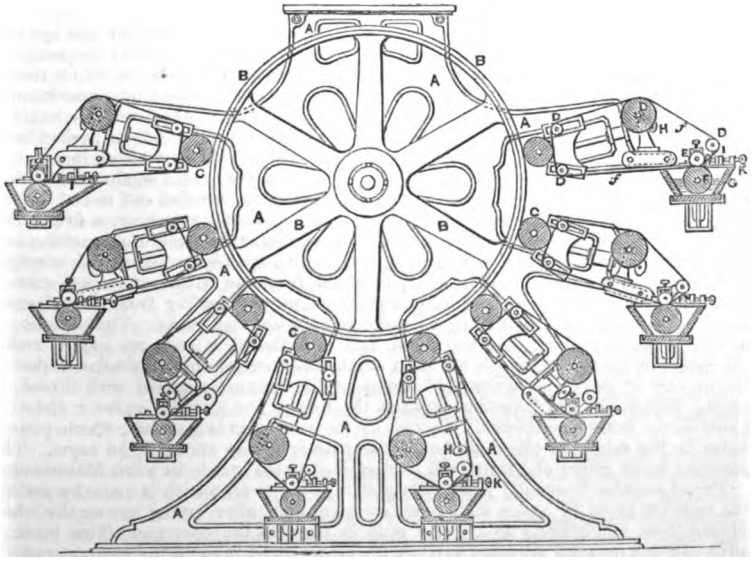

the surface roller; on leaving the furnishing roller F, the sieve is wiped by the doctor I screwed lightly against the sieve by the screw K.

Digitized by Google

The printing roller being in relief, there is no necessity for the complicated arrangement of levers as in the ordinary machine, and consequently the surface machine is much more simple. It is only adapted for patterns of little delicacy, as the outlines are apt to be not well defined; the colours, however, from being laid on the top of the cloth, are very rich, hence for woollen fabrics the surface machine is well adapted.

Pieces for printing by machine are stitched together end to end, which is usually done by girls, but the use of stitching machines is rapidly becoming general, and probably will soon become universal. One of these machines, found advantageous, is shown in *fig.* 373.

373

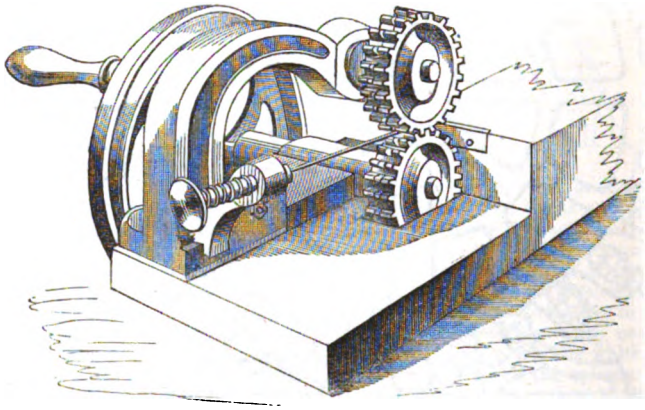

This machine was the invention of Charles Morey in 1849. A pair of wheels are fitted with leaves on their peripheries, and gear into one another like cog-wheels. These wheels are mounted in suitable bearings fixed to a sole plate, and receive rotary motion by means of a winch-handle. The centre of the teeth of both wheels is cut away, so as to form a circular groove between the two teeth which happen to be together. Opposite to this groove, and attached to the frame, there is a bracket which carries a sliding piece, with a spiral spring wrapped round it. In the end of the sliding piece, which passes through the bracket, there is a receptacle for the eye end of a needle, the point of which rests in the groove formed by the wheel; the needle is threaded, and the fabric to be stitched placed behind the wheels, to which rotary motion is communicated, whereby the fabric is successively folded into undulations, which, as the operation proceeds, are forced on the point of the needle; when the needle is full, and the piece at the other side of the wheels, the needle is pushed back on the spring, removed from the machine, and the thread drawn through the pieces, which are then basted or stitched together. This is a very rapid mode of stitching ends of pieces together; but where a number of pieces are stitched end to end for the purpose of being put through several operations without unstitching, a firmer description of stitching is required, and a machine, known as the American machine, and patented by Newton in 1853, is frequently used. This machine consists of an arrangement, whereby a bearded needle is employed for throwing a line of looped stitches into the fabric. The pieces are hung double on pins projecting from two circular racks, which move in grooves formed in the face of a circular frame. These racks are driven by pinions taking into their teeth, and thus the piece ends are passed under the action of the needle, which having a quick reciprocating motion similar to that of the needles of stocking frames, and being in like manner supplied with thread, is passed backwards and forwards through the fabric, and thereby leaves a chain of loops on the inner face thereof. Carried by the same arm is a stiletto, which pierces holes in the fabric to allow of the needle passing freely through the same. The machine being rather elaborate, will be described in the article SEWING MACHINES.

Pieces are also frequently gummed together at the ends, which is done by pasting the ends for about 1½ inches with paste or gum, and, after laying one on the other, drying them immediately on a steam pipe in front of the operator. This mode is advantageous for some purposes, as when the pieces come, in the subsequent operations, into hot water, they are easily detached one from the other.

Digitized by Google

By whichever of these modes the pieces are joined together, they are then wound in rolls of about 40 pieces by a machine called a candroy, which winds them on the wooden beam which fits in at the back of the printing machine, the cloth during the operation of winding becomes stretched laterally quite smooth, by the aid of one or two grooved stretching bars, as described in *fig.* 366, a due degree of strain being kept on the piece by it passing under and over several plain wooden bars, and to the axis of the wooden beam which receives the pieces being suspended weights which keep it forcibly in contact with the wooden drum which turns it by friction. In this machine the ends of the axis of the beam pass through slots, which allow it to rise as the pieces become wound on, and the diameter consequently increases. If fewer pieces than 40 are to be printed in one pattern or colouring, it is usual to stitch a few yards of old cloth between two pieces where the change is intended to be made; by this means the printer, on coming to the waste piece stops his machine, and fits another pattern or changes the colours without damaging good cloth.

The doctors used in cleaning off the superfluous colour from the rollers, are generally thin blades of steel, of a thickness varying from $\frac{1}{32}$ of an inch to $\frac{1}{10}$ of an inch, according to the sort of engraving on the roller; but some colours, such as those containing salts of copper, would be too corrosive on a steel doctor, and in this case doctors of a composition like brass are used. They are filed to a bevelled edge, and require to be retouched with the file after printing from 10 to 30 pieces. The cylinder or drum, in contact with which revolve the copper rollers, is wrapped round with a cloth called "lapping," which is generally a coarse strong woollen cloth of peculiar make, and is folded tight on the cylinder about $\frac{1}{2}$ an inch thick. The blanket is next put on and drawn tight: this blanket is a very important part of the machine; it is a thick woollen web, about 40 yards long, and requires to be made with great care, so as to be uniform in texture, thickness, and elasticity. If the blanket is uneven, it has the effect of throwing the blanket into confusion at the uneven places.

A good blanket will serve to print 10,000 pieces, being washed whenever loaded with colour, and then is suitable for covering the tables of the block printer.

In the year 1835 Messrs. Macintosh and Co. patented an Indian-rubber blanket, which consists of several thick cotton webs, cemented together with dissolved Indian-rubber. This blanket is very useful and economical for some purposes; the surface being very smooth, great delicacy of impression is obtained, and when soiled it is not necessary to remove it from the machine, as it is easily washed with a brush whilst revolving on the machine. An Indian-rubber blanket will print 20,000 pieces, which is twice as much as a woollen one will do, the price per yard being also lower. Several descriptions of these blankets are made by Messrs. Macintosh, some of them having a coating of vulcanised Indian-rubber on the face that is printed from, thereby giving a still more elastic surface. A great improvement has been recently made in these Indian-rubber blankets by shrinking or preparing the cotton previous to cementing, according to the patent process of Mr. John Mercer, viz. by soaking in strong alkali, and afterwards in dilute sulphuric acid; this process contracts the fibre to a certain extent, and the cloth is found to possess a great increase of strength. When made into blankets they are found to be more capable of resisting the severe strains of the printing process, and consequently many more pieces can be printed from them than from the old sort. They are made by Mr. Richard Kay, of Accrington, and are coming into general use. The woollen blanket, however, seems to be preferred for several styles. Several patents have been taken out for printing without blankets, but have never come into general use; but recently a mode of printing with grey or unbleached calico has come into use, which is very favourably spoken of. In this method a roll of grey cloth is so disposed behind the machine that the fabric can be conducted five times through the machine before finally going away to be wound on a beam for removal. There are, therefore, 5 layers of cloth under the white calico when printing, which gives a sufficiently elastic bed for printing from; and very delicate shapes can be got. Any given part of the grey cloth is 5 times uppermost on the pressure cylinder, and consequently 1 piece of grey cloth is used to print 5 pieces of white. Gutta percha pressure cylinders, or "bowls," have been suggested by Dalton, an English printer; but, though theoretically preferable to iron, they do not appear to be much used.

The proper hygrometric state of calico when printing should be attended to; very dry calico does not take colours or mordant nearly so well as when containing a certain amount of hygrometric moisture. Practically this is attained by the bleached pieces being stored in the "white room," generally several hundred pieces in advance, and they easily absorb sufficient moisture from the air to be in a proper state for printing on.

Pieces after printing by either block or machine are rarely put through the next operations at once, but are for the most part hung in spacious airy chambers in folds,

Digitized by Google

from an arrangement of rails at the top of the room. These chambers are kept at an equable summer temperature, and in proper hygroscopic conditions, due ventilation being also provided. These "ageing rooms," as they are called, are in several print works of enormous dimensions, and are generally separate buildings. Those of Messrs. Edmund Potter & Co., and Messrs. Thomas Hoyle & Co., in Lancashire, may be particularised as forming quite a feature in the works. The pieces stay in these chambers from 1 to 6 days, according to the style of work, during which time the colour which was deposited on the outside of the fibre gradually permeates it, and becomes more firmly attached, a portion of the base being deposited, and acetic acid given off in vapours. Where colours are required to absorb a certain amount of oxygen, such as iron mordant, catechu browns, &c., they find the necessary conditions here. On the proper ageing of printed goods depends in a great measure the success of many styles; should the room be too hot, or too dry, imperfect fixation of the colour ensues, and meagre and uneven tints are obtained in the subsequent operations. In countries where in summer the atmosphere is dry, great difficulty is found in ageing properly. In America catechu browns have been known to require weeks before being of the proper shade. These are of course exceptional cases; the scientific printer knows how to combat these evils by the introduction of watery vapour, or even by erecting his ageing room over a reservoir of water, with rather open boarding for floor; many colours also may have deliquescent salts introduced. In England the process of ageing is of pretty uniform duration.

Quite recently several printers have begun to adopt a method of "ageing," which promises to revolutionise the old way of hanging for several days, and thus occupying a large space. In a patent of Mr. John Thom for sulphuring mousseline-de-laines, a claim is made for using the same apparatus, or a modification of it, for passing calico printed goods through a mixture of air and aqueous vapour. Pieces, after leaving the hot room in which they are dried after printing, are run over rollers arranged in a narrow room, above and below. A very small quantity of steam is allowed to escape into this room, which is kept slightly warm by the steam-pipes. The pieces, on issuing from the apparatus, should feel soft, but not moist; they are loosely folded together, and stay in this state one night, and are taken to the dyehouse next day. It is even stated that this one night's age may be dispensed with, and the pieces dunged off after five or six hours' age.

The thickening of mordants and colours is a subject of very great importance to the printer. It is obvious that a mere solution of salts or colouring matters, such as used in dyeing, cannot be used in printing a pattern; capillary attraction speedily causes such a solution to spread beyond the limits of the pattern, and nothing but confusion is the result. A proper degree of inspissation is then essential. To the capability of very thick colour being printed by engraved plates or rollers under severe pressure is due the superior smartness of outline characteristic of goods produced by these means. Where colour can be laid on the outside of the cloth, so as to penetrate as little as possible to the other side, much brighter shades are produced. In order to obtain the most brilliant shades of colour, it is necessary that the cloth act as a sort of mirror behind the colour, which cannot be the case if the fibre is perfectly saturated with colour. Independent of this, a great economy of colouring material follows from the proper application of the colour or mordant to the face only. This is especially noticeable in madder goods, where the mordant, if printed in excess, is apt to give up a portion from the cloth in the dyebeck, thereby consuming a certain quantity of madder in pure loss.

The colour-house should be a spacious apartment on the ground floor, with the roof ventilated in such a manner that the steam produced finds a speedy exit; at one end, or down one side, is fixed a range of colour-pans, varying in size, and supplied with steam and cold water. Colour-pans are usually made to swing on pivots, whereby they are easily emptied and cleaned. A range of this sort, as manufactured by Messrs. Storey & Co., of Manchester, is represented in *fig.* 374. This range consists of 8 double-cased copper pans, containing from 1 to 28 gallons, riveted together at the top, wired at the edges, and made perfectly steam-tight; they are supported on cast-iron pillars, and are so arranged or fitted as to swivel or turn over when the colour is required to be emptied, by means of a brass stuffing box attached to pan, and working in the corresponding part attached to pillar on the one side, and moving at the other on a plain brass nozzle, supported by a pedestal projecting from pillar, the nozzle having a blank end, thereby cutting off the communication of steam, which is carried to the following pan. They are also supplied with a condense tap to carry off the waste steam and water. Each pillar in the range, except the last, is supplied with a brass tap on the top, with 3 flanges, to connect the steam and cold water pipes, as more fully explained hereafter.

A, *fig.* 374, is a copper pipe, with one blank end, and open at the other with flange

Digitized by Google

for the admission of steam, which passes through the downward-bent pipe marked B, in connection with the brass tap on top of pillar, the plug of this tap being open at bottom to admit the steam down the pillar as far as the stuffing box, marked E, through which it rushes into the casing of pans, and out by the condense pipe D, when required. C is a copper pipe, with one blank end and open at the other, for the admission of cold water for cooling the colour after boiling, and is likewise connected with the tap on top of pillar, as shown in *fig.* 375, marked *f*, the water passing through precisely in the same manner as the steam in A. D is the condense pipe, with one blank end and open at the other, with flange, underneath the pans, to carry off the

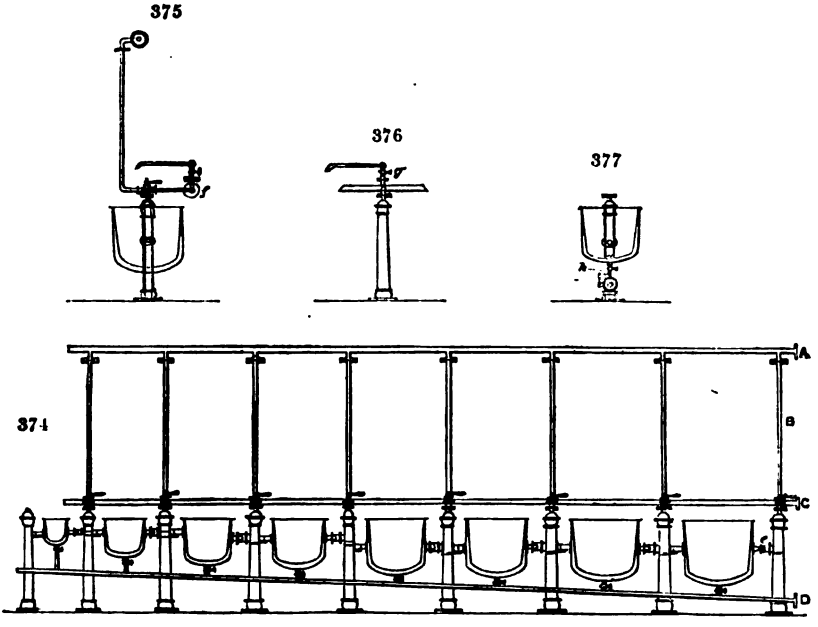

water or steam, and is supplied with ground brass nozzles to fit the condense tap at bottom of pan, being accurately adjusted, so that in the swivelling of pan it leaves its seat and returns perfectly steam-tight. *Fig.* 375 represents an end view of range, showing more fully the *position* and connection of steam and cold water pipes to brass tap, the cold water pipe running along back of range, the steam pipe above, parallel with centre of pans, and the downward-bent pipe in front; and likewise the stoppage in pillar, so far as is necessary there should be an aperture for the steam or water to meet the brass stuffing box. In this *fig.* is also shown the copper pipe, with elbow swivel tap, for supplying pans with cold water (one pipe to supply two pans), and fixed on top of cold water pipe exactly opposite pillar, as further shown in *fig.* 376 marked *g*. *Fig.* 377 is an end view of range, with pillar cut, in order to show the position of condense tap at bottom of pan, and its connection with condense pipe, and where the point of separation takes place in swivelling, by the line marked *h*. It will be seen by the foregoing that the process of boiling and cooling is rapid and certain, everything being accurately adjusted and steam-tight throughout the whole apparatus.

The colours are placed in these pans and stirred well all the time they are being boiled; good stirring is very essential to produce smooth colours. This was formerly done by hand with a flat stick, but lately the best print works have been fitted with machinery over the pans to stir mechanically. A very effective plan of this sort is represented in *figs.* 378 and 379. It is that of Messrs. Mather and Platt, of Manchester, the boilers in this drawing being not reversible, though the plan can be just as easily adapted to that description of pans. *Fig.* 378 is a front elevation; *fig.* 379 is a transverse section, and *fig.* 380 is a sectional plan, the same letters referring to all. *a* is a horizontal shaft above the pans, fitted with a pair of mitre wheels, *b b*, for each pan. The vertical wheel *b* is not keyed on the shaft *a*, but is brought into connection with it when required by the catch box *c*, which slides on a key on the shaft, and

Digitized by Google

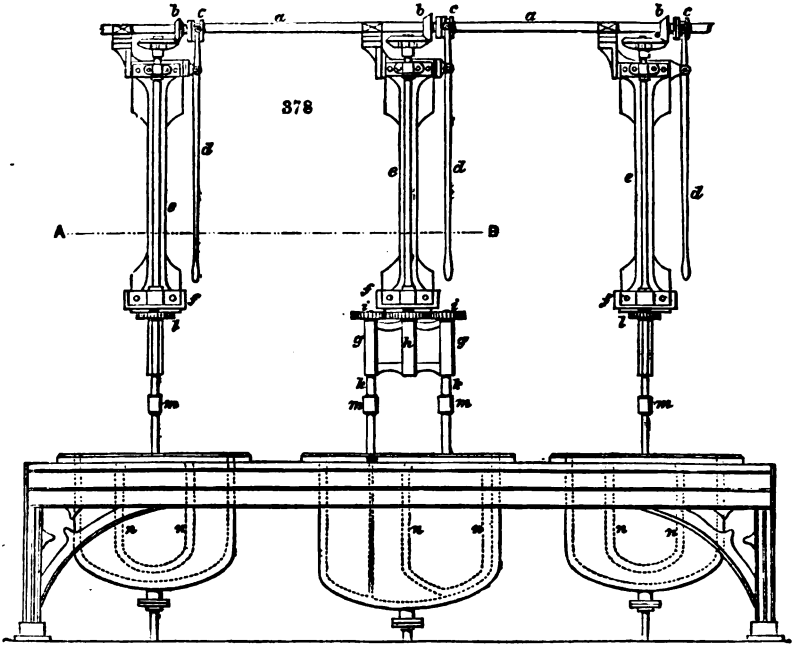

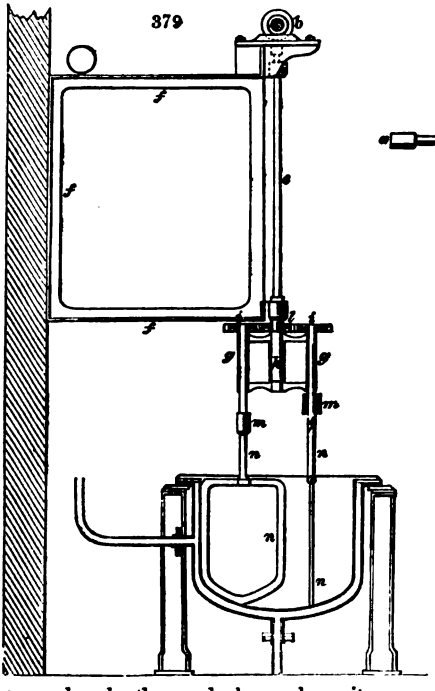

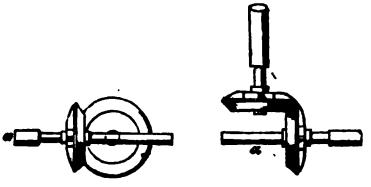

revolves with it (see *small cuts*); the catch box is worked by a lever handle *d*, and thus motion is given to the vertical shaft *e*. The shafts *a* and *e* are both supported by the framework *f*, fastened to the wall; the shaft *e* is terminated by the frame *g h g*, the centre of which, *h*, is a continuation of the shaft *e*; and the wings *g* are hollow to carry the shafts *k*, which are surmounted by the cog wheels *i i*, which gear into a cog wheel *l* on the shaft *e*. The agitators *n n* are made of flat brass rod, and are curved to fit the bottom; they are connected with the shafts *k k* by a hook joint, which is steadied by the conical sliding ring *m*; the agitators thus hang from the shaft *e*, and nearly touch the bottom of the boiler. When the shaft *e* is put in motion, the agitators have two movements, one round each other, and also each on its own axis; as they are set at right angles to each other, as shown in *fig.* 380, it follows that no part of the pan can escape being

Digitized by Google

stirred. When the colour is made, the piece *m* is slid up on *k*, and the agitators unhooked and taken out, the waste of colour being very trifling, in consequence of

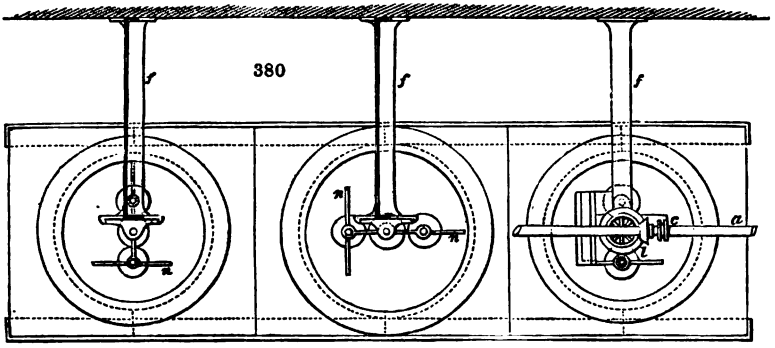

the agitators being outlines only. The saving of labour effected in a colourhouse by this machinery is very great, as, after turning on the steam, the pan may be left to itself till the colour is finished.

From the great variety of substances used in mordants and colours, of very different chemical properties, a variety of thickening substances is required. Chemical combination between the mordants or colour and the thickening substance is to be avoided as much as possible, for such combination may be regarded as so much pure loss, the fibre of the fabric not being able to decompose and assimilate them. Several circumstances may require the consistence of the thickening to be varied; such as the nature of the mordant, its density, and its acidity. A strong acid mordant cannot be easily thickened with starch; but it may be by roasted starch, vulgarly called British gum, and by gum arabic or senegal. Some mordants which seem sufficiently inspissated with starch, liquefy in the course of a few days; and being apt to run in the printing-on make blotted work. In France, this evil is readily obviated, by adding one ounce of spirits of wine to half a gallon of colour.

The very same mordant, when inspissated to different degrees, produces different tints in the dye-copper; thus, the same mordant, thickened with starch, furnishes a darker shade than when thickened with gum. Yet there are circumstances in which the latter is preferred, because it communicates more transparency to the dyes, and because, in spite of the washing, more or less of the starch always sticks to the mordant. Gum has the inconvenience, however, of drying too speedily, and forming a hard crust on the cloth, which does not easily allow the necessary capillary attraction to take place, and the tints obtained are thin and meagre. The substances generally employed in thickening are: —

1. Wheat flour.
2. „ starch.
3. Torrefied wheat starch, or British gum.
4. Torrefied potato farina.
5. Gum substitutes or soluble gums.
6. Gum Senegal.
7. Gum tragacanth.
8. Salep.
9. Pipe-clay or china-clay mixed with gum Senegal.
10. Sulphate of lead.
11. Molasses.
12. Dextrin.
13. Albumen of eggs.
14. Lactarine.
15. Gluten.
16. Glue.

Those most used are the first seven. The rest are only adapted for special styles or colours. The artificial gums produced by roasting starch or farina are very largely in use. The action of heat on starch causes a modification in it. According to the degree of heat and its duration a greater or less modification ensues, the higher the heat, the more soluble in water the gum, but also the browner and of least thickening properties. The addition of various acids and alkalies to starch or farina before calcination, causes them to become soluble at lower temperatures than without; different acids also produce different results; those most generally used are nitric, acetic, muriatic, oxalic, and recently lactic acid has been proposed by Pochin. The proportion of acid used is very small, and, though the effect is produced, the acid disappears during calcination. Small quantities of alkalies are also used for special modifications of these gum substitutes. The making of these gums is a distinct branch of trade, and finds employment for large capital and numerous hands. In giving the receipts for the various colours, care will be taken to specify the nature and proportion of

Digitized by Google

thickening to be employed for each colour; a most important matter, often neglected by English writers upon calico printing.

It is often observed that goods printed upon the same day, and with the same mordant, exhibit inequalities in their tints. Sometimes the colour is strong and decided in one part of the piece, while it is dull and meagre in another. The latter has been printed in too dry an atmosphere. In such circumstances a neutral mordant answers best, especially if the goods be dried in a hot flue, through which humid vapours are in constant circulation.

In padding, where the whole surface of the calico is imbued with mordant, the drying apartment or flue, in which a great many pieces are exposed at once, should be so constructed as to afford a ready outlet to the aqueous and acid exhalations. The cloth ought to be introduced into it in a distended state; because the acetic acid may accumulate in the foldings, and dissolve out the earthy or metallic base of the mordant, causing white and grey spots in such parts of the printed goods. Fans may be employed with great advantage, combined with HOT FLUES. See VENTILATION.

The mordant and thickening, or the dye decoction and thickening, being put in one of the copper pans, is stirred by hand or machinery and boiled till perfectly smooth; the steam then being shut off, cold water is admitted to the double casing, and the colour cooled. It is then emptied out of the pan into a straining cloth, stretched over a tub, and strained to remove all gritty particles, which would be very injurious to the copper rollers. A very useful straining machine has been recently invented by Dollfus Mieg & Co. and patented in this country. This machine is shown in *fig.* 381. It consists of a case or cylinder, in which a piston is worked, either by hand or power, to press the colour through a cloth made of cotton, linen, hair, or other suitable material at the bottom of the case or cylinder; or, instead of the said cloth, a wire gauze may be used. The bottom of the piston may be made of wood, copper, brass, gutta percha, caoutchouc, or other suitable material. The manner of working the apparatus will be clearly understood by reference to the drawings, in which *fig.* 381 is a side elevation of the said machine or apparatus, and *fig.* 382 a front elevation of the same. A represents the case or cylinder, which is strengthened at its upper part by the iron band B, and also at its lower part by the ring *a*. The skeleton plate *b*, which forms the bottom of the cylinder, is removable, and sustained by the four hooks *c*. To disengage the plate *b*, springs are fitted on the ring *d*, which act upon two of the hooks *c*, so as to throw them out from under the grid *b*. Upon the ring *a* the second ring *d* is laid, which supports the circular handle *e*. The upper parts of the four hooks *c* lay upon four inclined planes fitted on the ring *d*. The *modus operandi* is as follows:—If the ring *d* is turned right or left, the skeleton plate *b*, on which one of the said cloths or wire gauze has previously been placed, will be brought firmly up to the extremity of the cylinder A; and if the said cylinder be filled with colouring matter, the piston M, being worked by the pulley E, the wheels F, G, H, I, K, and the rack L, will force it through the cloth or sieve, to be received in a vessel under it for the purpose; and by a proper arrangement of the teeth of the said rack L, the piston can only descend to any required point in the cylinder. To facilitate the working of the apparatus and increase its general efficiency, the cylinder is fixed on pivots at N, so that it may be easily inclined or brought towards the operator for the purpose of introducing the colouring matter or cleaning the vessel. To the ring or band B is fixed the two handles *f* and the two catches *h*. The catches being raised from the notch *k* on the frame P, the cylinder may be pulled forward by means of the handles *f*, till the hooks, being acted upon by a spring, re-engage themselves at *k* on the lower part of the frame P, and *vice versâ*. On the shaft *x* is placed a second wheel Q, by which a reverse motion is obtained, and the piston M raised to its original position.

Colours for printing by block are for the most part thickened in the same manner as those for machine, but are made thinner, since very thick colour cannot be applied by block. Some substances also can be used in block printing that are inapplicable to machine, such as pipe-clay and china-clay, which, however finely ground, still contain gritty particles, which would speedily scratch and destroy the delicate engraving of the machine rollers.

A spacious drug room is attached to the colour-house where all the drugs used are kept away from the steam of the colour-house. Near the colour-house should be a well appointed laboratory, where drugs can be tested and experiments made.

Formerly, all the decoctions and mordants used in print-works were made on the spot, but the trade having very much extended, the manufacture of the various mordants and decoctions of dyewood, is now a separate business, and printers can be supplied with these articles at the same or in some cases a lower rate than they could be produced for on the works, the quality also being uniform and good. The printer now only makes for himself a few unimportant articles. The province of the foreman

Digitized by Google

colour maker, who is generally a well paid and responsible servant, is to combine these primary materials so as to form the different colours required for the different styles of work; as the taste of customers varies, he is required to be able to make any

381

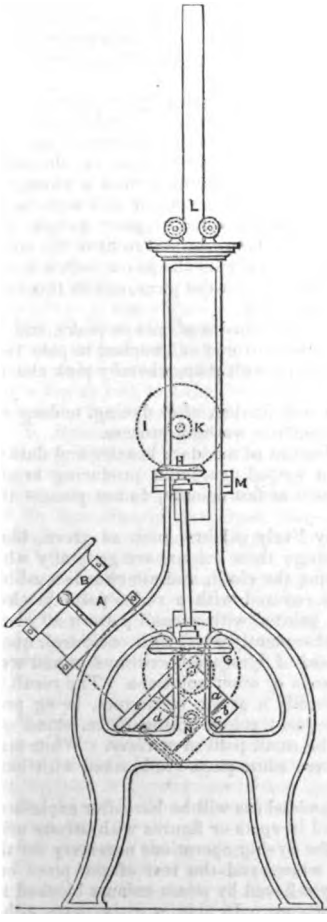

382

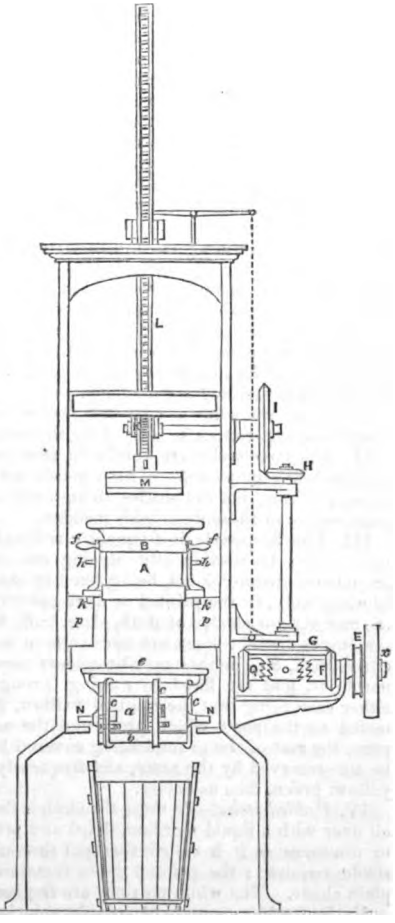

given variation of shade at will, and be able to judge of the quality of the various materials submitted to him. The ordinary decoctions that are kept in stock in the colour department are: —

Logwood liquor.	Gall liquor.	Catechu liquor.
Peachwood liquor.	Persian berry liquor.	Ammoniacal cochineal liquor.
Sapan liquor.	Cochineal liquor.	
Quercitron bark liquor.	Fustic liquor.	Extract of indigo.

And the various mordants and solutions are: —

Red liquor, or acetate of alumina,	Protochloride of tin in solution.	Ammonia liquor.
Iron liquor, or acetate of iron.	Oxymuriate of tin in solution.	Acetic acid.
Buff liquor, or pyrolignite of iron.	Nitrate of copper in solution.	Pyroligneous acid.
Pernitrate of iron.	Acetate of copper in solution.	Nitric acid.
Permuriate of iron.	Lime juice.	Muriatic acid.
Protomuriate of iron.		Sulphuric acid.
		Caustic soda liquor.
		Caustic potash liquor

Digitized by Google

Many other dry acids and salts are also kept in stock. For the constitution of the various mordants and their preparation see MORDANTS.

It would be impossible to particularise all the styles of calico printing. The variety is infinite; but they may be broadly classed as follows: —

I. *Madder styles*, varieties of which are —

a. The simplest form is a pattern printed in mordants on white ground, such as black and red; black, red, and purple; black and two reds, &c, chocolate being sometimes substituted for black, and brown from catechu being also introduced; these are dyed with madder, the ground remaining white.

b. Any or all of the above mordants, together with lime juice, technically termed *acid*, printed, and a fine pattern printed all over or *covered* in purple or light chocolate, then dyed madder. In this style the red is a peculiar one, termed *resist* red; and the result when dyed is, that the acid and red have prevented the purple or chocolate fixing on those parts, the red remaining pure and the acid having formed a white, the rest of the ground being covered with the fine pattern or cover; of this style large quantities are printed in black, purple, and acid, and covered in paler purple, the cover roller being any small full pattern, and this not being required to fit to the other pattern, a great variety of effects may be produced by varying the cover: often a still weaker purple is padded or blotched in a plain shade all over the piece, and in this case the only white in the pattern is that reserved by the acid.

c. The French pink style, which is wholly various shades of reds or pinks, and is printed in one or more shades of red and *acid*, then covered or blotched in pale red, then dyed madder and subjected to a peculiar clearing with soap, whereby pink shades of very great delicacy are obtained.

All these are what are termed *fast* colours, and having, after dyeing, undergone severe soaping, cannot be altered by the usual domestic washing process.

II. The same styles are dyed with garancin instead of madder; heavier and darker colours being employed. These goods are not soaped, garancin producing bright colours at once, but the shades, though still classed as fast colours, do not possess the permanence of those dyed with madder.

III. The first style is frequently relieved by lively colours, such as green, blue, yellow, &c., blocked in after dyeing and clearing; these colours are generally what are termed steam-colours, being fixed by steaming the cloth, and afterwards washing in water only, or the printed or dyed pattern is covered with a resist paste blocked on, and various shades of drab, slate, buff, &c., printed with a small pattern all over; sometimes these colours are mordants, to be subsequently dyed with cochineal, quercitron bark, &c., or they may be colours composed of dyewood decoctions, mixed with mordants, and are fixed by passing through soda or other solutions. The result in either case being that the original pattern, generally a group of flowers, being protected by the paste which prevented the subsequent colour fixing there, stand out pure, the rest of the ground being covered by the small pattern or *cover*. White may be also reserved by the paste, and frequently these white parts are blocked with blue, yellow, green, &c., as before.

IV. *Padded-styles.*—In these the cloth is first padded (as will be hereafter explained) all over with a liquid mordant, dried and printed in spots or figures with strong acid, or *discharge* as it is called, then put through the dyeing operations necessary for the shade required; the printed spots remaining white, and the rest of the piece one plain shade. The white portions are frequently relieved by steam-colours blocked in.

V. *Indigo-blue*; a style of considerable importance. In this, a resist paste, either alone or accompanied by resist yellow, or orange mordant, is printed on white calico, which is then dipped in the indigo vat, till the shade of blue wanted is obtained. If yellow or orange is present, these colours are raised with bichromate of potash liquor. The peculiar colours printed in this style have the property of preventing the indigo fixing on the printed parts, and the result is dark blue ground, with white, orange, or yellow spots, steam-colours being sometimes blocked in the whites.

VI. *China-blues*, a modification of the indigo-blue style, but in this case the pattern is produced by indigo colours, printed on white cloth: the pieces are next put through a peculiar process fixing the indigo in the cloth, the result being blue figures on white ground. All indigo styles are fast or permanent.

VII. *Turkey red and discharge.*— On dyed Turkey-red cloth is printed an acid, or acid solutions mixed with pigments or salt of lead; the printed pieces are passed through chloride of lime solution, when chlorine is eliminated by the acid colours, and discharges the red. The pigments or lead-salt being fixed in the cloth at the same time, after washing and chroming where yellow has to be obtained, the piece presents a pattern, bitten as it were in the Turkey red ground. Black is also printed along with the other colours. A modification of this style is the well known Bandanna style used for handkerchiefs. Turkey red cloth is folded in a hydraulic press

Digitized by Google

on a lead plate perforated with a pattern. When a sufficient number of folds are made on this plate, a precisely similar plate is put on the top, so as to register accurately with the bottom one; pressure being now applied, the cloth is squeezed tightly between the two plates, a top being opened above the upper plate, solution of chlorine is forced through the perforations, and in its passage through the cloth, discharges the dye; the chlorine liquor is followed by water, and the operation is finished: the pieces when removed from the press being discharged, according to the pattern of the lead plates.

VIII. *Steam-colours.*—In this style colours are formed from mixtures of dyewood extracts and mordants, together with various acids and salts, and being printed on calico which has been mordanted with peroxide of tin, the pieces are exposed to steam at 212° in close vessels, which causes an intimate union of the calico with the dyewood extract and mordant, so that subsequent washing with water removes only the thickening substance, and leaves the cloth dyed according to the pattern in various colours. Woollen fabrics and de laines, are always printed in this manner, and also often silk; animal fabrics not being well adapted for mordanting and dyeing in the same manner as cotton fabrics, owing to the peculiar property of wool to absorb colouring matters, which renders the obtaining of whites an impossibility where the wool is steeped in a dye decoction. These steam-colours are very brilliant and tolerably permanent to light, but do not withstand hot soap solution which alters their shades.

IX. *Spirit-colours* are made in somewhat the same manner as the steam-colours, but contain larger quantities of mordant and acid, and will not bear steaming, because the calico would be too much tendered by the acid, and are therefore only dried and hung up a day or two, and then washed in water. They are the most brilliant colours, but generally fugitive and are not much used.

X. *Bronzes*, formerly a style in large demand, but now almost obsolete; done by padding the cloth in solution of protochloride of manganese, precipitating the oxide by means of alkali, peroxidising this by chloride of lime, and then printing on colours composed of protochloride of tin and pigments or decoctions; the protochloride of tin immediately deoxidises, bleaching the brown oxide of manganese, and, where mixed with decoctions or pigment, leaving a dyed pattern cutting through the ground.

XI. *Pigment-printing.*—The colours in this class are the same pigments as used by painters, such as Scheele's green, ultramarine blue, chrome yellow, &c., and being quite insoluble in water are, so to speak, cemented to the fibre. The vehicle used for fixing these, is generally albumen, which coagulates when the cloth is steamed, and imprisons both cloth and fibre with the coagulum; of course these colours, though not altered in shade by soap, are detached in part by severe treatment, such as rubbing, &c.

First Style: Madders.

Madder styles being the most important, demand the most detailed descriptions. The colours used are of the class termed mordants, which, not colouring matters themselves, act by combining with both cloth and colouring matter. They are generally the acetates or pyrolignites of iron and alumina.

Red Liquor is the technical name of the pyrolignite of alumina used as mordant for red, &c.

Iron Liquor is the pyrolignite of iron used as mordant for black, purple, &c.

The preparation of these liquors on a large scale forms a separate business, and will be found described under the head MORDANTS.

Fixing Liquor.—For a long time it has been customary to add to black and purple colours, or mordants, some substance which has a tendency to prevent the oxide of iron from passing to the state of peroxide. The oxide of iron necessary to produce the best results with madder is a mixture of protoxide and peroxide of iron, probably the black or magnetic oxide, though this point is not precisely determined. If the oxide should pass to the red oxide state, inferior shades are produced; and the object of the printer introducing fixing liquor into his colour is to prevent this injurious tendency.

The earliest fixing liquor used was a solution of arsenious acid; and though other fixers have from time to time been introduced, the preparations of arsenic still hold their ground. A very good fixing liquor, that has been much used in France and England, is made as follows:—

No. 1. *Purple Fixing Liquor.*—7½ gallons water, 1½ gallons acetic acid, 9lbs. sal ammoniac, 9lbs arsenious acid; boil till the arsenic is dissolved, and let stand till quite clear.

In 1844, Mr John Mercer patented an assistant mordant liquor for the same purpose, which was made as follows:—

No. 2. To 100 lbs. potato starch, add 37½ gallons water, 123 gallons nitric acid, specific gravity 1·3, and 4 oz. oxide of manganese. The chemical action which takes place

Digitized by Google

amongst these ingredients is allowed to proceed till the nitric acid is destroyed. To the residuum thus produced is added 50 gallons of pyroligneous acid, and the compound is the assistant mordant liquor in a fit state to add to the various mordants used in printing and dyeing. The intention in making this liquor is to carry on the decomposition of the nitric acid and starch as far as possible without forming oxalic acid, and as little as possible of carbonic acid, which is gently aided by the catalytic action of the oxide of manganese, preventing the formation of oxalic acid. Apparently there is formed by this process saccharic acid, or an acid in a low state of oxidation, which is the active agent in preventing the peroxidisement of the iron when added to purple mordants. This liquor has been largely used, and is still preferred by some printers. Of late, various fixing liquors have been made and sold by manufacturing chemists, pyroligneous acid and arsenious acid, or arsenite of soda, forming the staple of them; some of these have chlorate of potash added, the object being the formation of arseniate of iron when the cloth is dried, whereby the acetic acid is more speedily driven off; and since arseniate of iron does not pass beyond a certain degree of oxidisement in the air, the mordant is kept in a proper state for dyeing good colours. The following is also a good purple fixing liquor: —

No. 3. *Purple fixing Liquor.* — Boil together till dissolved 2 gallons water, 25 lbs. soda crystals, 22½ lbs. arsenious acid. When dissolved, add to 50 gallons wood acid, previously heated to 120° F.; let stand for a day or two till the tar of the acid is settled, and add 3 quarts muriatic acid.

The following madder colours are from some in practical use, and though almost every colour-maker has different receipts for his colours, they may be taken to represent the general principles on which these colours are composed.

In all these colours the thickening substance is first beaten up with a little of the liquid till quite fine and free from lumps, then the remainder of the liquid added, and the whole boiled and stirred in one of the double-cased steam-pans till quite smooth; cooled, and strained.

No. 4. *Black for Machine* (*Madder*). — 4 gallons iron liquor at 24° T., 4 gallons pyroligneous acid, 4 gallons water, 24 lbs. flour; boil, and add 1 pint oil.

No. 5. *Black for Garancin* (*Machine*). — 7½ gallons water, 3 gallons iron liquor at 24° T., 1½ gallon purple fixing liquor (No. 3), 24 lbs. flour, 1 pint oil.

No. 6. *Dark-red for Madder* (*Machine*). — 12 gallons red liquor at 18° T., 24 lbs. flour.

No. 7. *Pale-reds for Madder* (*Machine*) are made by reducing the standard liquor, No. 8, with gum water to the shade wanted: for instance, No. 3 pale red is 1 of No. 8 and 3 of gum water, No. 9.

No. 8. *Standard red Liquor.*—10 gallons hot water, 40 lbs. alum, 25 lbs. white acetate of lead; rake up till dissolved, let settle, and decant the clear.

No. 9. 3 *lbs.-Gum-substitute Water.* — 10 gallons water, 30 lbs. gum substitute, No. 5 in the list of thickeners.

No. 10. *Dark resist red Madder* (*Machine*), see MORDANTS. — 12 gallons resist-red liquor, 18° T., 24 lbs. flour; boil, and when nearly cold add 12 lbs. of muriate of tin crystals.

No. 11. *Dark resist red Machine.*—Same as No. 10, but 6 lbs. of tin crystals only.

Of these two last, No. 10 is used when it has to resist a chocolate cover, and No. 11 when it has to resist a purple cover.

No. 12. *Pale resist-reds Madder* (*Machine*). — Made by reducing resist-red liquor with water, and thickening it. For instance, No. 5, pale red: 12 gallons resist-red liquor at 5° T., 9 lbs. flour; boil, and add, when cool, 2 lbs. tin crystals.

No. 13 *Chocolates* are made from iron liquor and red liquor mixed, and the red liquor is a multiple of the iron; as, for instance, 3 *chocolate* (*madder*) (*machine*):—3 gallons iron liquor at 24° T., 9 gallons red liquor at 18° T., 24 lbs. flour, 1 pint oil. No. 6 *Chocolate*: — 1 gallon iron liquor at 24° T., 6 gallons red liquor at 18° T., 14 lbs. flour, ½ pint oil.

No. 14. *Strong red for Garancin* (*Machine*). — 10 gallons red liquor at 18° T., 2 gallons water, 24 lbs. flour.

No. 15. *Resist-red for Garancin* (*Machine*). — 12 gallons resist-red liquor at 14° T., 24 lbs. flour; boil, cool, and add 9 lbs. tin crystals. This for resisting chocolate.

No. 16. *Resist-red for Garancin* (*Machine*).—12 gallons resist-red liquor at 14° T., 24 lbs. flour; boil, cool, and add 4½ lbs. tin crystals. This for resisting purple.

No. 17. *Brown Standard for Madder.* — 50 gallons water, 200 lbs. catechu; boil 6 hours, then add 4½ gallons acetic acid, and add water to make up to 50 gallons; take out, and let stand 36 hours, and decant the clear; heat it to 130° F., and add 96 lbs. sal ammoniac, dissolve, and leave to settle 48 hours; decant the clear, and thicken it with 4 lbs. of gum Senegal per gallon.

Digitized by Google

No. 18. *Brown Colour for Madder (Machine).* — 4 gallons No. 17, 1 gallon acetate of copper (No. 19), 2 quarts acetic acid, 2 quarts gum Senegal, water 4 lbs. per gallon.

No. 19. *Acetate of Copper.* — 1 gallon hot water, 4 lbs. sulphate of copper, 4 lbs. white acetate of lead; dissolve, let settle, decant the clear, and set at 16° T.

No. 20. *Brown for Madder (Machine).* — 7 gallons of No. 17, 1½ gallon of No. 19, 1½ gallon gum red (No. 21).

No. 21. *Gum red.*—3 gallons red liquor at 18° T., 12 lbs. gum substitute; boil.

No. 22. *Brown for Garancin (Machine).*—2 gallons of No. 18, 1 gallon 4 lbs.-gum-substitute water.

No. 23. *Brown for Garancin (Machine).*—2 gallons No. 17, 3½ gallons 4 lbs.-gum-substitute water, 3 quarts acetic acid, 3 quarts No. 19.

No. 24. *Drab for Madder (Machine).*—4 gallons No. 17, 1 gallon protomuriate of iron at 9° T., 3 gallons No. 19, 1 gallon 4 lbs.-gum-substitute water. For garancin, add 4 gallons gum water instead of 1 gallon.

No. 25. *Drab for Madder (Machine).*—5 gallons No. 24, 1 quart muriate of iron at 9° T., 5 gallons 4 lbs.-gum-substitute water, 3 quarts No. 19.

No. 26. *Madder Fawns* are made by adding to madder drab $\frac{1}{12}$th, or so, of red liquor, according to the shade wanted.

No. 27. *Madder Purples.*—Iron liquor, mixed with purple fixing liquor, is diluted with gum water according to the shade wanted. For instance, *No. 4 purple for madder (machine)*:—1 gallon of iron liquor at 24° T., 2 gallons No. 3, 4 gallons farina gum water No. 28. *No. 12. purple*:—1 gallon iron liquor at 24° T., 2 gallons No. 3, 12 gallons No. 28.

No. 28. *Dark Farina Gum Water.*—10 gallons water, 60 lbs. dark calcined farina; boil.

No. 29. *Garancin Purples* are reduced from iron liquor to the shade wanted with the following gum:—20 lbs. light British gum, 8 gallons water, 1 gallon purple fixing liquor No. 3; boil well, then take out, and let stand 3 or 4 days before using. *Colour:* 1 measure iron liquor, 8, 10, 20, 30, &c., of the above gum, according to shade wanted.

No. 30. *Padding Purples.* — Reduce to shade with the following gum:— 6¾ gallons water, 1 gallon No. 3, 1 quart logwood liquor at 8° T., 9 lbs. flour; boil, and add 5 quarts farina gum No. 28. For instance, 70-*padding purple for machine*:—1 gallon iron liquor at 24° T., 70 gallons of the above gum.

Block colours are made from any of the preceding receipts, by making them a little thinner.

No. 31. *Alkaline red Mordant.* — In a vessel capable of holding 12 gallons, put 10 lbs. alum, and dissolve with 5 gallons boiling water, then add gradually 3 quarts caustic soda at 70° T., mixed with 1 gallon cold water, fill up with cold water; let settle, decant and repeat the washing till the clear liquor is tasteless; filter to a pulp, take off, and add to it 5 pints caustic acid at 70° T.; boil down to 3 gallons, add 9 lbs. dark gum substitute, and boil again a short time.

No. 32. *Pale red Alkaline Mordant.* — 1 measure of the above colour and 2 or 3 measures of dark gum-substitute water.

No. 33. 10 *Acid.*—1 gallon lime juice at 10° T., 1 lb. starch; boil.

No. 34. 20 *Acid.*—1 gallon lime juice at 20° T., 1 lb. starch; boil.

No. 35. 30 *Acid.*—1 gallon lime juice at 30° T., 1 lb. starch; boil.

No. 36. *Acid Discharge.*—1 gallon lime juice at 22° T., 1 lb. bisulphate of potash; filter, and thicken the clear with 1 lb. starch.

No. 37. *Acid Discharge.*—1 gallon lime juice at 28° T., 2 lbs. bisulphate of potash; filter, and thicken the clear with 5 lbs. dark British gum.

In the last two colours, the bisulphate throws down a quantity of flocculent matter, which has to be filtered out.

No. 38. *Reserve Paste.*—3½ gallons lime juice at 50° T., 2½ gallons caustic soda at 70° T.; heat to boil, then, in a separate vessel, beat up 56 lbs. pipeclay with 3¾ gallons boiling water, and add 3¼ gallons 6 lbs.-gum-Senegal water; add to the other solution, and boil 20 minutes.

No. 39. *Reserve Paste.*—4 gallons lime juice at 60° T., 3 gallons caustic soda at 70° T.; boil, and add 48 lbs. pipeclay beat up with 2 quarts boiling water, and 4 gallons 6 lbs.-gum-Senegal water; boil 20 minutes.

The above two pastes are used for blocking on madder-work, to protect the pattern from the following covering shades, which are raised with quercitron bark, &c. &c. No. 38 is a paste used where there are only black and reds to preserve, and No. 39 is used where there is also purple.

Covering Shades.

No. 40. 5 *Drab.* — 1 quart iron liquor at 24° T., 5 quarts water, 2½ lbs. light British gum.

Digitized by Google

No. 41. 10 *Drab.* — 1 quart iron liquor at 24° T., 10 quarts water, 4½ lbs. light British gum.

No. 42. 5 *Drab.* — 1 quart iron liquor at 24° T., 1 quart red liquor at 20° T., 5 quarts water, 2½ lbs. light British gum.

No. 43. 10 *Drab.* — 1 quart iron liquor at 24° T., 1 quart red liquor at 20° T., 10 quarts water, 5 lbs. light British gum.

No. 44. *Olive.*—2 gallons red liquor at 12° T., 1 gallon iron liquor at 14° T., 6 lbs. light British gum.

No. 45. *Olive.*—3 gallons red liquor at 18° T., 2 gallons iron liquor at 8° T., 10 lbs. light British gum.

No. 46. *Sage.*—9 quarts red liquor at 9° T., 1 quart iron liquor at 12° T., 4 lbs. light British gum.

No. 47. *Sage.*—14 quarts red liquor at 3° T., 1 pint iron liquor at 12° T., 5½ lbs. light British gum.

No. 48. *Chocolate Brown.*—6 gallons red liquor at 15° T., 1 gallon iron liquor at 24° T., 10½ lbs. light British gum, 3½ lbs. flour.

No. 49. *Slate.*—3 quarts logwood liquor at 8° T., 2 quarts iron liquor at 24° T., 1 quart red liquor at 18° T., 1 quart No. 50, 7 gallons water, 18 lbs. light British gum; boil.

No. 50. *Gall Liquor.*—28 lbs. ground galls, 2 gallons acetic acid, 12 gallons water; stir occasionally for two days, and filter.

No. 51. *Hazel.*—4 quarts brown No. 18, 2 quarts bark liquor at 10° T., 1 pint logwood liquor at 12° T., 1 quart cochineal liquor at 8° T., 16-oz. measure No. 52, 4½ quarts 6 lbs.-gum-Senegal water.

No. 52.—1 quart nitrate of iron at 80° T., 1 pint nitrate of copper at 100° T.

No. 53. *Standard for Buffs.* — 10 gallons water, 40 lbs. copperas, 20 lbs. brown acetate of lead: stir till dissolved, settle, and use the clear; reduced to shade wanted with gum-Senegal water.

No. 54. *Chrome-oxide Standard.*—3 gallons water, 12 lbs. bichromate potash; dissolve with heat, put in a mug of 12 gallons' capacity, add 3½ pints oil of vitriol diluted with 6 quarts cold water, add gradually 3 lbs. sugar; when the effervescence has ceased, boil down to 3 gallons.

No. 55. *Drab.*—5 quarts gum-tragacanth water (8 oz. per gallon), 2½ quarts No. 55, ¾ pint cochineal liquor at 4° T., ¾ pint bark liquor at 8° T.

No. 56. *Fawn.*— 1 gallon No 55, 2 gallons 8 oz.-gum-tragacanth water, ½ gallon brown No. 17.

No. 57. *Slate.*—1 gallon No. 55, 1 gallon 8 oz.-gum-tragacanth water.

No. 58. *Gum-tragacanth Water.* — 10 gallons water, 5 lbs. gum tragacanth in powder; stir occasionally for 3 days.

No. 59. *Fast Blue Standard.*—150 gallons water, 18 lbs. indigo in pulp, 24 lbs. copperas, 28 lbs. lime previously slaked; stir occasionally for 2 days, let settle, and draw off the clear liquor, and to every 10 gallons add 1 pint muriate-of-tin liquor at 120° T.; filter on flannel to a thick paste.

No. 60. *Fast Blue for Machine.*—1 quart No. 60, 6 oz. muriate-of-tin crystals, 3 quarts of water.

No. 61. *Fast Blue Standard.*—4 lbs. indigo ground to pulp, 3 quarts caustic soda at 70° T., 3 quarts water, and granulated tin in excess; boil in an iron pot till perfectly yellow, when put on a piece of glass.

No. 62. *Fast Blue (Block).* — 1 quart No. 62, 12 oz. muriate-of-tin crystals, 12 oz. lime juice at 60° T., 3 quarts 6 lbs.-gum-Senegal water.

No. 63. *Fast Green.*—1¼ quart No. 60, 2 quarts lead gum No. 64, ½ lb. muriate-of-tin crystals.

No. 64. *Lead Gum.*—1 gallon hot water, 8 lbs. white acetate lead, 4 lbs. nitrate lead; dissolve, and add 1 gallon 6 lbs.-gum-Senegal water.

The course of operation for the styles 1, 2, and 3 above, is to print in one or more of the madder colours; after dyeing, the goods are hung in the ageing room for a day or two, then brought to the dye-house. The first operation is that termed *dunging*, which is the same in principle for all varieties of madder or garancin goods, and as it is an operation the careful performance of which is of vital importance to the success of the subsequent operations, a somewhat detailed description of it will not be out of place. The process of dunging has for its object—

1. Precipitating on the fibre, by double decomposition, that portion of the mordant which has escaped decomposition in the ageing room.

2. Rendering insoluble and inert those portions of the mordant which are not in direct contact with the fibre, and which, if allowed to diffuse in water only, would fix on and stain the white or unprinted parts of the cloth.

3. Softening and removal of the staining substances.

Digitized by Google

4. Neutralising the acids which may have been added to the mordants, and which otherwise would dissolve in the water and weaken the colours.

5. The formation, in the case of iron mordants, of a compound of oxide of iron, and certain organic or inorganic acids which will not become peroxidised beyond a certain point. The use of cow's dung, derived from India, has been continued down to the present time, though for several years printers have largely introduced various substitutes.

No very exact analysis has been made of cow dung. Morin's, which is the most recent and elaborate, is as follows:—

Water	70·00
Vegetable fibre	24·08
Green resin and fat acids	1·52
Undecomposed biliary matter	0·60
Peculiar extractive matter (*bubuline*)	1·60
Albumen	0·40
Biliary resin	8·80

According to M. Kœchlin's practical knowledge on the great scale, it consists of a moist fibrous vegetable substance, which is animalised, and forms about one-tenth of its weight; 2, of albumen; 3, of animal mucus; 4, of a substance similar to bile, 5, of muriate of soda, muriate and acetate of ammonia, phosphate of lime, and other salts; 6. of benzoin or musk.

Probably the hot water in which the calico-printer diffuses the dung exerts a powerful solvent action, and in proportion as the uncombined mordant floats in the bath it is precipitated by the albumen, the animal mucus, and the ammoniacal salts; but there is reason to think that the fibrous matter in part animalised or covered with animal matter, plays here the principal part; for the great affinity of this substance for the aluminous salts is well known.

It would appear that the principal function of dunging is to hinder the uncombined mordant diffused in the dung bath from attaching itself to the unmordanted portion of the cloth, as already observed; for if we merely wished to abstract the thickening stuffs, or to complete by the removal of acetic acid the combination of the aluminous base with the goods, dung would not be required, for hot water would suffice. In fact, we may observe, that in such cases the first pieces passed through the boiler are fit for dyeing; but when a certain number have been passed through, the mordant now dissolved in the water is attracted to the white portions of the cloth, while the free acid impoverishes the mordanted parts, so that they cannot afford good dyes, and the blank spaces are tarnished.

It seems to be ascertained that the mordant applied to the cloth does not combine entirely with it during the drying; that this combination is more or less perfect according to the strength of the mordants, and the circumstances of the drying; that the operation of dunging, or passing through hot water, completes the combination of the cloth with the aluminous base now insoluble in water; that this base may still contain a very minute quantity of acetic acid or sulphate of alumina; that a long ebullition in water impoverishes the mordant but a little; and that even then the liquid does not contain any perceptible quantity of acetate or sulphate of alumina.

A very able and learned memoir upon this subject, by M. Penot, Professor of Chemistry, appeared in the Bulletin of the Society of Mulhausen, in October 1834, with an ingenious commentary upon it, under the title of a Report by M. Camille Kœchlin, in March 1835.

Experience has proved that dunging is one of the most important steps in the process of calico printing, and that if it be not well performed the dyeing is good for nothing. Before we can assign its peculiar function to the dung in this case, we must know its composition. Fresh cow's dung is commonly neutral when tested by litmus paper; but sometimes it is slightly alkaline, owing, probably, to some peculiarity in the food of the animal.

The total constituents of 100 parts of cow dung are as follows: Water, 69·58; bitter matter, 0·74; sweet substance, 0·93; chlorophylle, 0·28; albumine, 0·63; muriate of soda, 0·08; sulphate of potash, 0·05; sulphate of lime, 0·25; carbonate of lime, 0·24; phosphate of lime, 0·46; carbonate of iron, 0·09; woody fibre, 26·39; silica, 0 14; loss, 0·14.

In dunging calicoes the excess of uncombined mordant is in part attracted by the soluble matters of the cow's dung, and forms an insoluble precipitate, which has no affinity for the cloth, especially in presence of the insoluble part of the dung, which strongly attracts alumina. The most important part which that insoluble matter plays, is to seize the excess of the mordants, in proportion as they are dissolved by the water of the bath, and thus to render their reaction upon the cloth impossible. It is only in

Digitized by Google

the deposit, therefore, that the matters carried off from the cloth by the dung are to be found.

M. Camille Kœchlin ascribes the action of cow dung chiefly to its albuminous constituent combining with the alumina and iron, of the acetates of these bases dissolved by the hot water of the bath. The acids consequently set free soon become evident by the test of litmus paper, after a few pieces are passed through, and require to be got rid off either by a fresh bath or by adding chalk to the old one. The dung thus serves also to fix the bases on the cloth, when used in moderation. It exercises likewise a deoxidating power on the iron mordant, and restores it to a state more fit to combine with colouring matter. See Cow Dung.

The use of cow dung is open to some objections, amongst which are its giving a certain amount of greenish colouring matter to the white mordants, and its being apt to vary in its constituents from differences in the food of the animals, their health, &c.; the method of using substitutes for it being now well known, and better colours and whites being more easily obtained from them than with dung, it is probable that cow dung will in a short time cease to be used in calico-printing processes. The dunging operation ought to be a definite chemical decomposition, which cannot be the case with a variable substance like dung. The substitutions for dung in use are:—

1. Phosphate of soda and lime.
2. Arseniate of soda.
3. Arsenite of soda.
4. Silicate of soda.
5. Silicate of lime.

Each of these has its peculiar virtues, and the printer determines for himself which is best adapted for his styles. The first was patented by John Mercer, about 1842, and is made by calcining bones, then decomposing them with sulphuric acid, filtering out the sulphate of lime, and, to the clear superphosphate of lime, adding carbonate of soda till slightly alkaline; the resulting mixture of phosphate of soda and phosphate of lime is dried down to a powder; the use of arseniates formed part of the same patent. Arsenite of soda followed as a matter of course, though not so safe in use as phosphates and arseniates. Silicate of soda was suggested by Adolph Schlieper, of Elberfeld, and patented by Jäger in 1852. It is the ordinary soluble glass dissolved in water. It is open to the objection of being too alkaline, and requires care in the use. The silicate of lime was suggested by Higgin with a view to remove this objection. The silicate of lime is formed in the dung cistern, by mixing silicate of soda and muriate of lime, when sparingly soluble silicate of lime is formed; the quantity in solution at one time being never so much as to be dangerous, and fresh portions being dissolved as wanted. Dunging salts, or liquors, are now made by the manufacturing chemist, containing various mixtures, arseniates, phosphates, arsenites, &c., which are adapted for every variety of dunging. Great economy of time and material result from the use of these dung substitutes. In some of the largest print works, instead of, as with dung, running off the spent-dung cistern after passing through from 100 to 200 pieces, and having to fill again, and heat to the proper temperature, it is found possible to run pieces through the same cistern charged with substitute, at the rate of a piece per minute half a day, and with light goods a whole day—before letting off, of course occasionally adding some of the substitute, to make up for that saturated by the mordants. The dunging process is always performed twice: the first time in a cistern with rollers; and the second, in a beck similar to a dye beck, washing well between. The first is called *fly dunging*; the other, second dunging.

The manner of immersing the goods, or passing them through the dung bath, is an important circumstance. They should be properly extended and free from folds, which is secured by a series of cylinders.

The fly-dung cistern is from 10 to 12 feet long, 4½ feet wide, and 6 or 8 feet deep. The piece passes alternately over the upper rollers and under rollers near the bottom. There are two main squeezing rollers at one end, which draw the cloth through between them. The immersion should take place as fast as possible; for the moment the hot water penetrates the mordanted cloth, the acetic acid quits it, and, therefore, if the immersion was made slowly, or one ply after another, the acid, as well as the uncombined mordant, become free, would spread their influence, and would have time to dissolve the aluminous subsalts now combined with the cloth, whence inequalities and impoverishment of the colours would ensue.

The fly-dung cistern should be set with about 30 gallons of dung to 1000 gallons of water; or, to the same quantity, 3 to 4 gallons of dung-substitute liquor; a little chalk is added, to make the cistern slightly milky. The heat varies for different styles—from 150° F. to boil. Where there is acid discharge or resist, and the colours are heavy, fly-dunging at boil is necessary, to enable the acid to cut properly through the colour; the nearer to 150° F. that the bath will give good whites at, the better will be the subsequent dyed colour. With cow dung, an excess of it is injurious, both to white

Digitized by Google

and colour; but with a tolerably neutral substitute, excess does no harm. The pieces should run at the rate of 50 to 60 per hour. On leaving the cistern, they are well winced in water, and washed, and are then second dunged, which is generally performed in a beck similar to a dye beck, which will be found described further on. This beck is set with about 1 quart of dung-substitute liquor, or 12 gallons of dung to 250 gallons. From 12 to 24 pieces are put in together, and made to revolve over a reel for about 20 minutes or half an hour, the heat being about 150° F. They are then well washed, and are ready for dyeing. This second dunging is principally for the purpose of removing the thickening substance from the cloth, and it should feel quite soft when well done. An improved method of dunging adopted by some extensive firms consists in arranging a fly-dung cistern, a wince pit, a machine similar to the bleacher's washing machine, and containing the second dunging solution and one of the dye house washing machines all in a line; the pieces, being then stitched end to end, are drawn through the series; first, extended and free from folds, through the fly-dung cistern; thence dropping into water in the pit; from that being worked spirally from end to end of the second dunging vessel, which runs at such a speed that one piece is about 15 minutes in traversing it; from that into a water pit again, and finally, spirally, through the washing machine, when they are ready for dyeing By

383

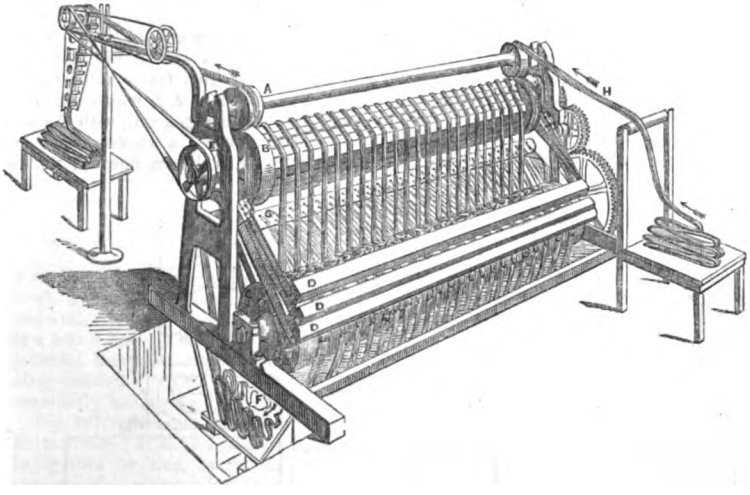

384

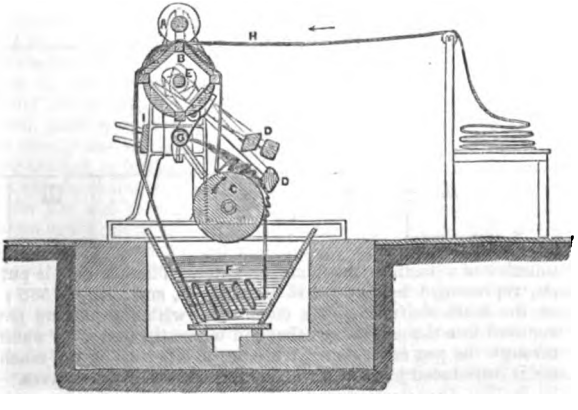

this arrangement the process is a continuous one, and little labour is required. The drawing rollers on the fly-dung cistern are worked by a strap from a shaft. On the

Digitized by Google

thorough cleansing from loosely attached mordant, and especially thickening, depends a good deal of the success of the dyeing, and this process is one that requires to be carefully attended to.

The washing processes in the dye house have undergone great modifications within the last few years. Formerly dash wheels (see DASH WHEEL) were exclusively employed, but now are considered far too slow, and expensive in labour, and are nearly abolished, being substituted by various washing machines. A great number of machines have been invented, which all have their admirers. Three, which have been found very efficacious, are here given.

Fig. 383 is a perspective view, and *fig.* 384 a section of the machine patented by Mather and Platt. The pieces, fastened end to end, are run spirally through the machine, being subjected to the action of the beams or beaters, D D, whilst lying in loose folds on the large wooden roller C.

Fig. 385 is a machine patented by Whitaker, and possesses the merit of great simplicity with comparatively small first cost, together with great efficiency. The invention consists of a peculiar arrangement of the material to be washed, by which, instead of it moving in one continuous direction, it is made to cross in its traverse; and by one part being in constant contact with another part, a powerful rubbing action is continually kept up, thereby washing or cleansing the cloth or material more effectually than can be done by the usual method of merely passing it between presser rollers.

Fig. 385 is an end view of this washing machine, and *fig.* 386 an end view with the frame side removed, to show the improved arrangement. A and B represent two stones, upon which the machine is fixed; *c* is the frame, which forms sides for the water cistern, and also the journals, or bearings, of the bowls *d*, *e*, *f*, which pass from one side to the other, as in ordinary washing machines; *g* is a peg rail, with the pegs *h* passing across the machine; *i* is the outlet for spent water; *j*, a wooden frame surrounding the whole of the water or liquor in the cistern *k*, which is open at the top

385

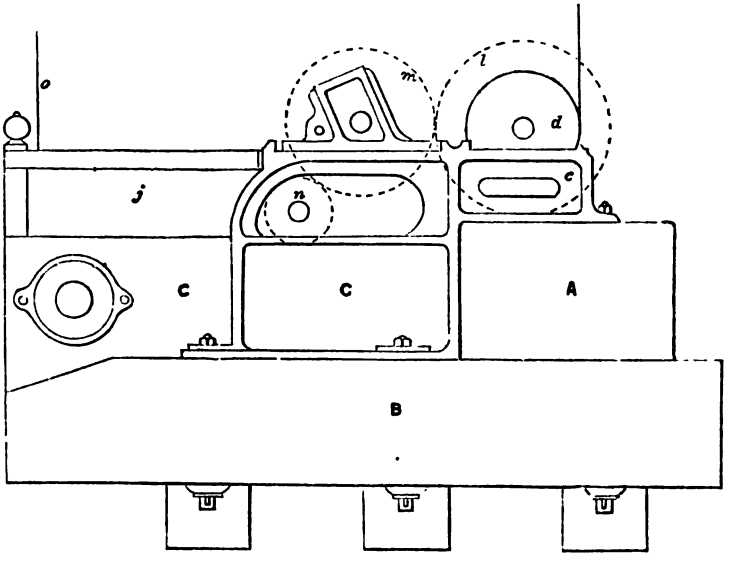

end, and communicates with the space for over water. The machine is put in motion by spur wheels, represented by the dotted circles *l*, *m*, and *n*, in *fig.* 385; the wheel *m* is put upon the main shaft or shafts connecting with the moving power. The piece *o* is introduced into the machine at that end where the outlet for water is placed, and threads through the peg rail progressively to the other end of the machine, where the fresh water is introduced just upon the cloth or material as it leaves. When the machine is in motion, the cloth moves on progressively, and is caused to vibrate by the varying dimensions of the square bowl, which motion rubs one part of the material against another part, by being crossed once on each side of the square bowl,

Digitized by Google

and washes in the same manner as a woman would do in ordinary domestic washing. And it will be observed that when a corner of the square bowl is at the bottom, the material is then below the surface of the water, and when the side of the square bowl

386

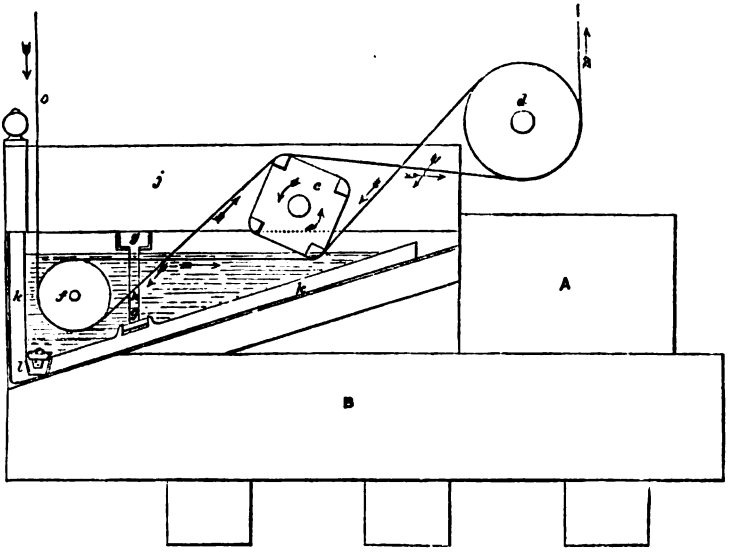

is at the bottom the cloth is above the surface; thus, for each revolution of the square bowl, the cloth is plunged four times, which action encloses air within the folded material, and opens it out between the peg rail and square bowls, sometimes as large as a man's hat. The water is preserved clean at that end of the machine where the material leaves it, by its being brought in there, and allowed to escape where the dirty material enters, and by the shallowness of the water cistern the water is constantly being renewed.

Fig. 387 represents the machine patented by Mr. David Crawford of the Barrowfield Printworks. It is said to answer well for all sorts of fabrics, the finest muslins not being torn by this, as is the case with most washing machines. This machine consists of a rectangular frame, fitted up with rollers, dashboards, a dashing frame and driving gearing. The frame is divided into a series of stories or flats, one above another, like the floors of a house, each flat having a dashboard or a fixed platform divided down the centre, towards which division-line each half inclines downwards. The goods in a continuous length-like form are passed first of all round a taking-in roller, which directs the cloth round a long horizontal roller of considerable diameter, which runs in bearings at one side or end of the lowest of the series; the fabric passes round this roller, and there proceeds horizontally along and through the flat at that level, passing in its way through a vertical traversing frame, which works between the contiguous edges of the platforms or dashboards of all the flats where the boards are divided as before explained. In the centre, at the opposite end of the flat, there is a corresponding horizontal roller, round which the fabric passes, returning through the flat and through the vertical traversing frame to the first roller; the fabric passes again round this roller and again through the flat, and so on until the required number of crossings and re-crossings has been completed. The rollers are geared together so as to be driven simultaneously to carry the fabric along back and forward over these rollers and through the flats, whilst jets of water or other fluids are allowed to fall upon the fabric in its passage, and whilst the vertical traversing frame dashes the cloths with rapidity and severity upon the dashboards beneath; the traversing frame being worked by an overhead crank, or by any other reciprocator. As the cleansing liquid falls down it is received upon the dashboards beneath, and until it pours off at the centre: the striking action causes the liquid to be well forced into the fabric. When the water falls away at the centre it is received by a bottom duct and conveyed away to a bottom side-chamber, into which chamber the fabric, as primarily washed in the bottom flat, is first of all delivered from its rollers to the

Digitized by Google

next flat on the series, where it is treated in a precisely similar manner; and this routine is continued throughout the whole of the flats until the fabric finally emerges from the top of one of the series in its completely cleansed condition. Each flat is supplied with jets of water, and it is obvious that as the fabric passes through and beneath these jets, and is violently struck upon the dashboards, a most powerful washing and cleansing action is secured: provision is made for varying the length of traverse of the vertical dashing frame and the rapidity of its traverses.

Fig. 387 on the drawings is a sectional elevation, and *fig.* 388 is an end view cor-

387

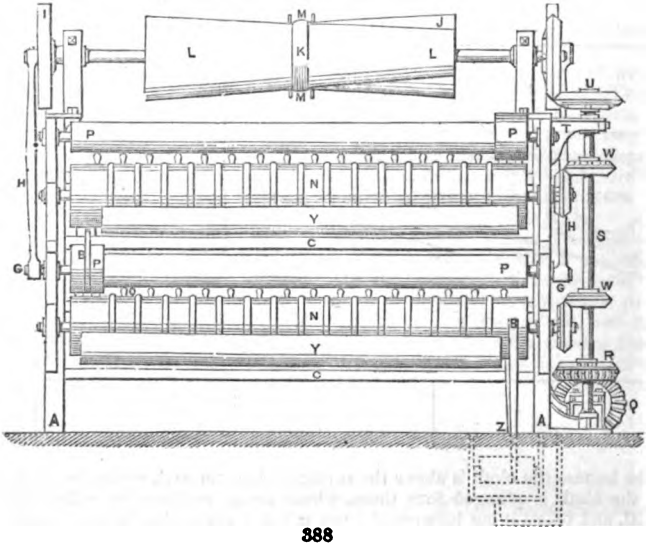

388

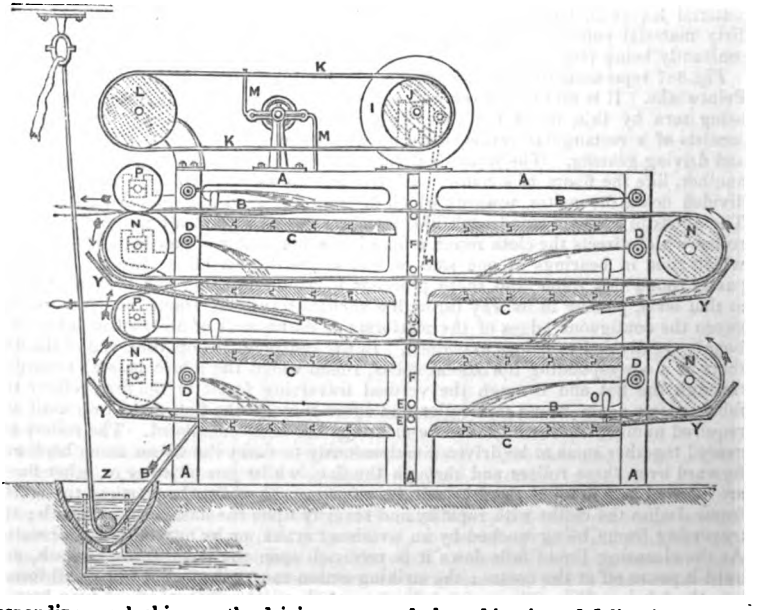

responding, as looking on the driving gear, and the taking in and delivering movements. The two cast-iron side standards, A, form the main frame. These standards

Digitized by Google

carry internal bracket flanges for supporting the four dashboard floors, C. All the driving movements are actuated from a bottom horizontal shaft, carrying a bevel wheel, Q, in gear with a corresponding wheel, R, fast on the lower end of a vertical shaft, S. This shaft, by means of the two pairs of bevel wheels, W, drives the two large end rollers, N, carried in end bearings external to the main framing. The lower end of the shaft rests in a footstep bearing on the floor, whilst the upper end is supported in a collar bearing, carried by a bracket, T, bolted to the frame. At this part, a third pair of bevel wheels, U, forms the driving communication between the shaft and the end conical roller pulley, L, working the dashing movement. All the stories or dashboards of the machine are plentifully supplied with water by the pipe D, having a regulating stop-cock at its upper or lower branch. From this main pipe, cross branches, D, pass into and through all the divisions discharging the water by the jets upon the goods passing through the machine. A guide ring is attached to the ceiling of the workshop, V, for the passing through of the goods, B. From this ring, the line of goods passes in the direction of the arrow, down and round a guide roller arrangement, so as to be directed through the water in the small bottom chamber, Z. On leaving this chamber the fabric passes through a delph eye in the end boarding of the machine, and thus reaches the lowest division of the series. As it continues its course it passes between the lowest pair of rollers or bars, E, of the vertical traversing frame, F, which gives the necessary dashing action, then proceeds, guided by the pin O round the bottom back roller N, corresponding to the lowest of the front rollers N. On rounding this roller, the fabric repeats the circuit already described three or more times, as indicated by the turns upon the roller, in the view of *fig.* 2. After the completion of this traverse, the line of fabric ascends, as shown by the arrow being drawn out between the nipping roller P and the bottom roller N. The fabric again ascends for the last time and passes through the third and fourth divisions, being delivered in a cleansed condition at G. The dashing action, as already explained, is worked from the conical pulley J, the spindle of which runs in pedestal bearings immediately above the centre of the machine, A sliding rod, with a double strap fork, M, is fitted up for enabling the attendant to set the drawing belt, K, at any part of the conical pulley, so as to vary the rate of revolution of the driving pulley J, that of L being constant. The spindle of the pulley J carries at each end an adjustable disc crank, I, the face slots of these discs having crank stud-pins set in them for working the upper ends of the pendant connecting rods, H. The lower ends of these rods are similarly jointed to stud G upon the opposite edges of the traversing dashing frame F. These studs work through vertical slots in the main standards, and as the disc crank I revolves at a rapid rate, it follows that the corresponding rapid traverse of the dashing frame energetically dashes the lines of fabric passing between its rollers upon the several dashboards of the machine. The cleansing water falling from the several jets, is conducted from flat to flat by conductors, Y, thoroughly washes the goods, whilst this is going on, and it finally falls through the central openings in the dashboards, and is received into the bottom central trough, whence it flows away by the duct, and is delivered into the chamber Z. The lever X in connection with pulley P is to enable the attendant to rise up pulley P in threading the machine. This machine is beautifully adapted for bleaching purposes, as from the peculiarity of its action it answers as a perfect Bleaching Machine in itself. The slots, grooves in the disc cranks, afford a ready means of varying the length of the traverse of the dashing frame; and this adjustment, coupled with that of the rate of revolution of the central conical roller, affords the greatest possible nicety of adjustment of the powers of the machine, which the manufacturer, bleacher, or finisher can ever require, either for light or heavy goods.

Up to this point there is scarcely any difference in the operations on pieces destined for styles 1 a, b, &c., and 2. Those intended for dyeing with madder are printed in stronger colours than those for dyeing with garancin, since the soaping process reduces the strength of colour considerably, and garancin colours undergo no severe treatment after dyeing. The general process of dyeing is thus performed :—

Fig. 389 represents a front elevation of a pair of dye becks, with automatic winch reel, and *fig.* 390 is an end elevation of one of them. The drawing is kindly supplied by Messrs. Mather and Platt, of Salford. A A is a cast-iron cistern, 8 feet long by 4 feet deep by 3 feet wide, with curved bottom; brackets B B are cast on the ends to support the cistern on the stone foundation. The beck is fixed over a channel C, which communicates with the system of drains which carry away the waste liquors into the river. There are two holes in the curved bottom—one at each end—which, when the beck is in use, are stopped with movable plugs; one of these holes communicates direct with the drain and the other with a trough D, which communicates with a pit outside the dyehouse, and where the spent madder can be run for the purpose of making into garanceux. E is a water pipe, with a branch into each beck, with a screw

Digitized by Google

tap attached; F is a main steam pipe, which divides into the branches G, furnished with valves at H; the pipes G subdivide in branches I, one of which goes down each end of the dye beck, the perforated pipe K, which traverses the beck from end to end, connecting them; a perforated iron diaphragm is placed across the beck from end to

389

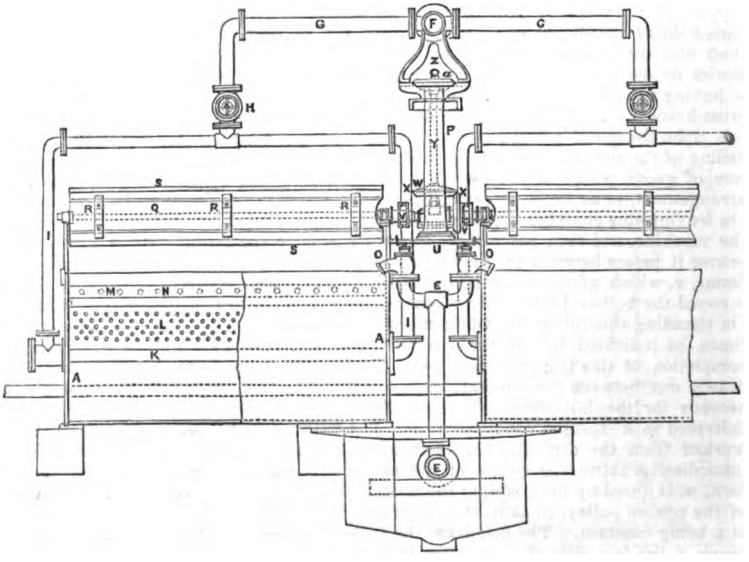

end; above this is a strong rod M, from end to end, carrying pieces N projecting at right angles from it. Bolted on the ends of the dye beck is the framework O, which carries the bearings of the shaft Q of the winch reel; keyed on the shaft are three sets of cast-iron arms R, which terminate in forks, in which fit the spars S; the reel is boarded between the spars, as at T. The framework O of the two dye becks is connected by the piece U, which carries the bearings of the short shaft V, on which is keyed one of a pair of mitre wheels W W; there are sliding catch boxes X X, on this shaft, which revolve with it; there are corresponding catch boxes keyed on the ends of the shaft Q; the connecting piece U carries also the pillar P, which carries the bearings of the vertical shafts Y, and also of the horizontal shaft Z; keyed on the shafts Y and Z are bevel wheel *a a*, and at the bottom of shaft Y, the mitre wheel W. Permanent motion being given the shaft V V, by this gearing, either of the reels can be put in motion or stopped by the catch boxes X X, worked by lever handles, in or out of the catch boxes on the ends of the reels. In working the becks, two pieces are knotted end to end, and each length passed over the reel down between two of the studs N, under the steam pipe K, up behind the diaphragm L, being then knotted together so as to form an endless web, the bulk of which lies on the bottom of the beck. The drawing shows a beck adapted for 15 lengths of 2 pieces each, or 30 pieces. About 200 gallons of water are put in the beck before the pieces are

390

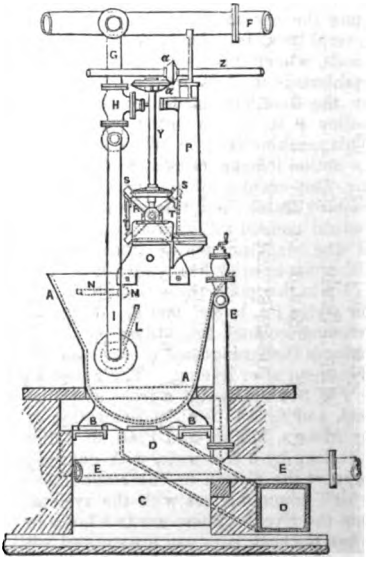

Digitized by Google

put in; and, after the pieces, the dye stuff is added, the reel set in motion, and the steam gently turned on; from the steam going in at each end, the beck is uniformly heated; the heat is then gradually raised to boil, generally in about two hours, the pieces continually revolving with the reel so as to bring each portion successively into the air, agitating the dyeing materials at the same time. When the dyeing is finished, the steam is shut off, the knots untied, and the pieces pulled over into a pit of water surrounded by a winch reel, which is always placed behind every dye beck. After wincing in this, the pieces are fastened together again, and put through the washing machine two or three times; they then are ready for the subsequent operations. Maddered goods, on issuing from the dye beck, are far from possessing the beauty that they afterwards show, the colours are dull and heavy, and the white part stained with a reddish shade; various clearings are required, in which soap plays a principal part. Garancined goods show pretty nearly the colour they are intended to be; but as the white is also stained, a peculiar clearing is given them which will be described further on. Madder goods are cleared with soap in a beck similar to a dye beck. They receive generally two soapings of about half an hour, with from ¼ to ½ lb. of soap per piece each time, washing between. If the white is not sufficiently good, the pieces are spread out on the grass for a day or two, and are afterwards winced in hot water to which a little solution of chloride of lime or soda is added. They are then washed and dried. Chintz work is dyed with from 1 lb. to 5 lbs madder per piece of 30 yards, according to the pattern; generally, a little chalk is added, and if there is no purple in the pattern, some sumac, which is found to economise madder, but will not do where there is purple, the shade of which it deadens. Pieces of any style, after undergoing the final process, are passed through a pair of squeezing rollers, or put in the hydroextractor, when the moisture is driven out by centrifugal force (see HYDROEXTRACTOR); they are then dried on the cylinder drying machine.

Plate Purple is a style composed of black and one or more shades of purple only, and requires a little different treatment. Print in black No. 4, dark purple to shade No. 27 and acid, say No. 35, cover pad in pale purple No. 30, age. Fly dung at 170° F., second dung at 165° F. half an hour; wash and dye with ground Turkey madder root giving ⅛ of its weight in chalk, and 3 quarts of bone size to the beck; bring to 175° F. in 2 hours, and keep at 175° F. half an hour; wash well and soap 15 pieces, ¾ths, 30 yards, half an hour at boil with 5 lbs. soap to 15 pieces; wash well and wince 5 minutes at 140° F. with 2 quarts chloride of lime liquor at 8° F to 300 gallons; wince and soap again at boil half an hour with 3 lbs. soap to 15 pieces; wash and wince 5 minutes in 4 quarts chloride of lime at 8° F. and 2lbs. carbonate of soda crystals to 200 gallons water; at 160° F. well wash and dry.

In this style, as in any where there is severe soaping, it is necessary to give a slight excess of madder in the dye, so as to ensure perfect saturation — if this is not done, the colour speedily degrades, and becomes impoverished. It may be observed here, that the style plates are such as formerly were printed by the plate or flat press, and are generally small patterns, with padded or well covered grounds, the colours being few, and frequently only different shades of one colour.

Plate Pinks or Swiss Pinks — a style imported from Switzerland, consisting of various shades of red and delicate pinks, produced as follows. Print in No. 6 with second or third shades as No. 7 — acid No. 34 may be also printed and a very pale shade of red covered, aged two or three days, dunged at 160° F. — if dung substitute is used, care must be taken to use one that is not caustic from free alkali: the dyeing must be done with the finest quality of French or Turkey madder. The pieces must have sufficient madder allowed to overdye them, or dye a heavy brownish red. For a full plate pink on ¾ths cloth, from 4 to 6 lbs. of French madder will be required. About 5 per cent of chalk may be added to the dye where the water is soft. The heat should be raised to 150° F. in 2 hours, and kept at that heat half an hour. It is necessary to keep the heat low in dyeing French pinks, to prevent the impurities from fixing on the mordants, as only the very finest portion of the colouring matter must be fixed — after dyeing the pieces are well washed and soaped with about half a pound of soap per piece in a beck at 140° F. for half an hour, they are then well washed and entered in a beck with cold water to which has been added sufficient oxymuriate of tin or sulphuric acid to make faintly sour, a little steam is turned on and the heat raised to about 120° F. in half an hour, the colours which on entering the beck were full shades of red, gradually assume an orange tint, and when of a bright orange colour, the pieces are taken out, and winced in water. This operation termed *cutting* is the one that decides the depth of tint in the finished piece. The longer the pieces are kept in the beck and the greater the heat, the paler and more delicate the shade of pink obtained. After this treatment they are put in a beck with soap and boiled for an hour, taken out, washed well, and put in a strong pan charged with soap and water, the lid screwed down, and boiled at a pressure of two atmospheres,

Digitized by Google

either by direct fire or high pressure steam, for two or three hours, then taken out, washed, and put in a beck with water at 160° F. charged with a little hypochlorite of soda: they stay in this about ten minutes, and are then washed and dried. In some print works, after the high pressure boil, the pieces are spread out on the grass for a night or two, and then cleared in hypochlorite, &c. The use of the acid here is not very clear, it probably completely purifies the colour from iron which may have been in the mordant, but it also seems to render the combination of alumina, tin, lime, colouring matter and fat acid a definite one by removing a small quantity of the mordant. The French chemists assert, that after the final process, a definite atomic compound of lime and alumina, colouring matter, and fat acid remains.

The quality of the soap used by printers is of great importance. It is made for them specially from palm oil, and requires to be as neutral an oleo-stearate as possible; an alkaline soap like domestic soap would impoverish and degrade the shades.

The soaping process has a two-fold action: —

To clear the white by decomposing the compound of lime and colouring matter which forms the stain; this it does by double decomposition, forming oleo-stearate of lime, which dissolves or forms an emulsion with the excess of soap; and a compound of soda and colouring matter, which dissolves. In its action on the dyed parts, it probably first removes resinous and other impurities which are loosely held by the mordant, and secondly gives up a portion of its fat acid to the dyed parts—the resinous acids or possibly phosphoric acid from the dyed parts, by combining with the soda, setting free fat acid for this purpose.

Second Style: Garancin.

Almost all the madder styles are imitated by dyeing with garancin, a concentrated preparation of madder (see MADDER), which dyes fine brilliant colours at once, not requiring to be soaped to develope the shades, but not possessing the extreme solidity of madder colour. Garancin dyeing is the most economical way of using madder, since more colouring matter is obtained in this way than by using madder direct, and consequently garancin is principally used for full heavy colours, which, if dyed with madder and soaped, would be to a certain extent abraded and not stand so finely on the surface of the cloth. Chocolate grounds, black, red, and chocolate, with brown or drab, dark purple plates, black and scarlet ground, are thus dyed; in short, wherever the pattern is very full and cheapness essential, garancin is resorted to. The colours or mordants for garancin are usually about two-thirds of the strength of similar colours for madder (see the list of colours), the ageing and dunging, &c., are the same as for madder; the dyeing is performed in the same manner, using from one-fourth to one-third the quantity that would be used of madder. A little chalk is also added where the water is soft; and the dyeing is commenced at 110° F., and carried to 185° F., or 190° F. in 2 hours; then got out and well washed and rinsed in water at 140° F., in a beck, for 10 minutes, then squeezed and dried. The white is always stained a little, though not to the same extent as in maddered goods, and this slight stain is removed by a process peculiar to garancin goods. In front of an ordinary cylinder drying machine, is placed a padding apparatus, and between it and the drying machine is placed a chest provided with a few rollers at top and bottom; this chest is covered by a lid, which has at each end a slit, by which the piece enters and issues; a perforated steam pipe at the bottom of the chest allows steam to blow freely in. The padding machine is charged with solution of hypochlorite of lime, at from $\frac{1}{2}$° to $2\frac{1}{2}$° Twaddell's hydrometer; according to the depth of the stain on the white; the pieces are padded in this liquor, squeezed out by the bowls, and then run into the steaming chest, which is of such a size, that any given point on the piece is about $\frac{1}{2}$ minute in passing through it; on leaving this chest the pieces pass through water or water is spirted on from a perforated pipe; after again passing through squeezing rollers, they proceed on to the cylinders of the drying machine, on leaving which the white is found to be perfectly bleached and the colours brightened.

There are several varieties of garancin, each adapted to particular styles. For dark full black, chocolate, and red, with brown or drab, and where there is no purple, a garancin termed chocolate garancin, made from the commonest descriptions of madder, answers very well, and this class of goods is usually dyed with chocolate garancin, assisted by small quantities of sumac, quercitron bark, and peachwood, which additions give full rich shades. Where there is purple, none of these adjuncts can be used, and the garancin requires to be made from a superior description of madder. Within the last three or four years, great improvements in the manufacture of purple garancins have been made. The Alizarin, patented by Pincoff and Schunck, has the property of dyeing at once purples as pure as the finest soaped madder shades; it has the disadvantage of not dyeing good black and reds, and when these colours are freely introduced along with purple, an admixture of ordinary purple garancin is

Digitized by Google

required, the general effect being still very good, but the purple not quite so fine. The garancin patented by Higgin dyes very good purple, with black, chocolate, and red also. Both these improved garancins stain the white grounds very little, and produce considerably faster work than the ordinary garancins; the goods may even be soaped to a considerable extent. A garancin that will bear as severe soaping as madder, or a method of so dyeing with garancin as to produce the same effect is still a desideratum. When this can be accomplished, there will be an end of dyeing with madder, which will be considered a raw material, and be all manufactured into garancin.

Garanceux. — In ordinary madder dyeing, the madder can never be made to give up all its colouring matter; when all colouring matter soluble in water has been exhausted, there still remains about a quarter of the whole quantity combined with lime and mixed with the woody fibre. This madder is turned to account by converting it into garancin, or, as this preparation is called, garanceux. The spent madder is run off into a pit outside the dyehouse, where it is mixed with a small quantity of sulphuric acid, to precipitate any colouring matter in solution. It is then allowed to drain dry; removed from the pit, it is boiled in a leaden vessel, with more sulphuric acid, for several hours, then washed on a filter till free from acid, and after draining is ready for use. It dyes to about one-third the strength of ordinary chocolate garancin, and is principally used for the commoner garancin styles. Mr. John Lightfoot, of Accrington, has patented an improvement in the ordinary process of making garanceux. He recommends large vats to be provided, two or more in number, each sufficiently large to contain all the waste dyeing liquor produced in the dyehouse in one day, and so arranged that the liquor runs from the dyebecks into them; at a certain point in the trough that conducts the liquor to the vats is placed a lead cistern with a valve and perforated bottom; this cistern holds a regulated quantity of concentrated sulphuric acid, and whenever a dyebeck is let off and the liquor flowing down the trough, a quantity of acid, proportionate to the quantity of madder, is allowed to run down through the perforated bottom and mix with the hot liquor; the acidulated liquor then runs into the vat, a tightly fitting cover on which keeps the liquor hot. When the day's dyeing is done, the vat is left covered up all night; next day the lid is raised, and by means of holes and pegs in the side of the vat, all the clear liquor is drained away, the vat filled anew with water, stirred up, and when settled, the clear drawn off again; this washing being repeated till all the acid is washed away, the garanceux is then run on a filter to drain for use. The advantages of this plan are, first, the saving of fuel, by economising the heat of the waste liquor, and, secondly, the production of one-fourth more colouring matter.

Third Style: Reserved.

Maddered or garancined goods are often left with white spots, as leaves, &c., and when dyed these spaces are filled with various bright colours, such as green, blue, yellow, &c. These colours are the ordinary steam colours described hereafter, and are fixed in the same manner.

Another way of combining madder or garancin colours with steam colours is by blocking on the dyed object, generally groups of flowers, a reserve paste (No. 39), and when this is dry, *covering* by machine in small patterns with various shades of drab, olive, &c. (Nos. 5, 44, 46, &c.), which then are dunged and dyed with quercitron bark, cochineal, madder and bark, &c. &c. Where the paste has been applied, the colours underneath, or the white spots reserved, are unaffected by the covering colour, and stand out clear surrounded by the covering colour. In the white spaces reserved are now blocked steam colours, which are raised by steam as described further on.

Fourth Style: Padded.

In this style the white cloth is mordanted all over by padding in red or iron liquor, or mixtures of them, drying in the padding flue; then a pattern is printed on in acid, and the usual dunging and dyeing operations performed, the result being a dyed ground with a white pattern.

Fig. 391 represents a section of the padding flue used in mordanting to this style.

It consists of a long vaulted chamber, about 35 yards long by 5 yards, and 4 yards high, cut in two at nearly half its length, by 6 small arches built in an opposite direction to that of the chamber, the object of which is to preserve the principal arch from the action of the heat, and to hinder the dried pieces from being exposed, on coming to the higher part, to moisture and acids, which are disengaged in great abundance and might condense there. cc is a long furnace, the flue of which forms the bottom of the chamber; the top of the flue is covered with plates of cast iron fitting one into another, and which can be heated to near red heat by the flame of the furnace. F is an arched passage by which the interior of this store can be reached. *hh* are ventilating holes in the lateral wall which can be opened and closed at will by means of the rod *j*, which is connected with sliding doors over the apertures.

Digitized by Google

kk are cast iron supports for turned copper rollers, which are fixed to the cross pieces *yy*, and serve to conduct the piece. *ll* are bars of iron which carry the fans *mm*, which are covered by gratings, and make about 300 turns per minute.

In front of this hot flue is placed all the apparatus necessary for padding the pieces, and moving them through the drying chambers. This movement is caused by pulleys RR driven from a prime mover.

391

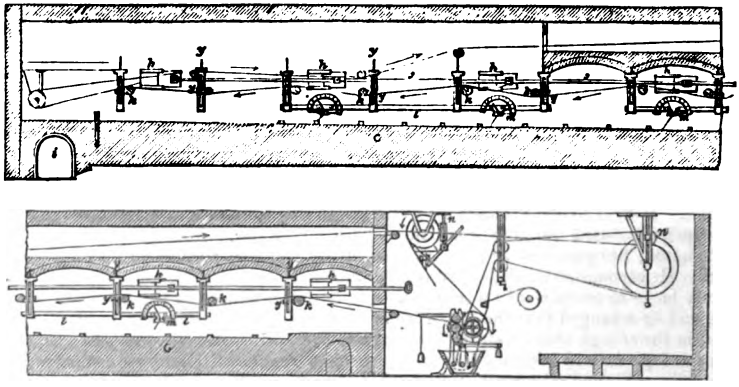

The mordant liquor being put in the box of the padding machine, the pieces wound on a beam and placed above the machine are conducted through the box, then between the two lowest rollers above the box, from them through the liquor again, passing next through the highest rollers, and so into the flue, their course being easily traced by the arrows; on leaving the flue dry, they are wound on a beam, or plated down on the wooden platform behind the machine. The 3 rollers of the padding machine are made of brass, and are wrapped with a few folds of calico; the iron journals of them work in slots, the lowest one being at the bottom of the slot working in brass bearings; a weighted lever presses the top roller in forcible contact with the others.

Padded goods after printing in acid are hung 2 or 3 days in the ageing room, dunged, and dyed. A few of these shades are here given.

a. Claret and white. Pad in red liquor at 10° F., dry, cool, and pad again in same liquor, dry, cool, and print in acid No. 37, age 3 nights. Fly dung at boil, wash, second dung at 160° F., ½ hour, wash, dry, and *singe*, wash and dye 12 pieces 7 ft. 8 in. 30 yards with 18 lbs. ground peachwood, 21 lbs. of French madder, 5 lbs. sumac, 5 lbs. prepared logwood, run the pieces in the beck cold for 20 minutes and then bring to a boil in 1 hour and 10 minutes, boil 15 minutes, get out, rinse and wash, bran 10 minutes at boil in a beck with a few pounds of bran, rinse in a pit and bran again at boil, wash and dry.

Prepared Logwood is thus made. — Ground logwood is spread out on a floor, damped with water, and heaped up. It is then turned over once a day for a fortnight and occasionally wetted, during which time it changes from a dull red to a bright scarlet. It is then ready for use. Some change, probably oxidation, has taken place, and the wood dyes further after this process.

b. Scarlet and white. — Padded and dunged as for clarets; then 10 pieces dyed with 15 lbs. French madder, 15 lbs. Dutch crop madder, 7lbs. peach wood, 4 lbs. sumac with 3 quarts bone size; bring to a boil in 2¼ hours, and boil a quarter of an hour; wash and bran, &c.

c. Scarlet and yellow. — Proceed as for scarlet and white, but dye 10 pieces with 22½ lbs. crop Dutch madder: 22½ lbs. French madder; 7½ lbs. sumac, wash, bran, and dry; then pad in red liquor at 10° T., age 2 nights, fly dung at 130° F., wash and warm water at 120° 10 minutes, dye 10 pieces with 20 lbs. quercitron bark, heat to 120° in 1 hour, keep at 120° 15 minutes, wash and dry.

d. Burgundy and white. — Pad, &c., as for clarets; dye 10 pieces with 18 lbs. French madder, 18 lbs. peachwood, 1½ lbs. logwood, 5 lbs. sumac, 4 quarts glue. Heat to boil in 1¾ hours, boil a quarter of an hour, wash and bran at boil 10 minutes, wash and dry.

e. Tyrian purple and white. — Pad, &c. as for clarets; dye 10 pieces with 5 lbs. prepared logwood, 5 lbs. Dutch crop madder, and 7 lbs. peachwood, 2lbs bran, and 3 quarts bone size. Bring to boil in 1¾ hours, boil a quarter of an hour, wash and bran at 150° 5 minutes with 1 lb. bran per piece, wash and dry.

f. Puce and white. — Pad, &c. as for clarets; dye 12 pieces with 3 lbs. fine

Digitized by Google

ground cochineal, 1 lb. ground galls, 4 lbs. prepared logwood, 3 lbs. peachwood, heat to 170° in 1 hour, and 20 minutes, keep at 170° 10 minutes, wash, bran at 160° 10 minutes; wash and dry.

g. Amber and white.—Pad, &c. as for clarets; dye 10 pieces with 20 lbs. quercitron bark, 10 lbs. Dutch crop madder, 2 quarts bone size. Heat to 160° in 1 hour and 15 minutes, keep at 160° 15 minutes, wash, bran 10 minutes at 150°; wash and dry.

h. Peach and white.—Pad, &c. as for clarets; dye 10 pieces with 2 lbs. ground cochineal, 2 lbs. peachwood, 6 oz. logwood, heat to 140° in 1¼ hours, wash, bran at 140° 10 minutes; wash and dry.

i. Black and white.—Pad in red liquor at 20° T. once, print in No. 36, age 3 nights, fly dung at boil, second dung at 140°, 20 minutes, wash, dry, and singe, wash and dye 10 pieces with 60 lbs. prepared logwood, 4 gallons of bone size, and 6 oz. carbonate of soda crystals, heat to boil in 1 hour and 10 minutes; wash well and dry.

k. Olive, drabs, &c. with white.—A great variety of shades may be obtained by varying the mordants. For drabs pad in iron liquor diluted about 10 times according to the shade wanted, and dye in bark, or bark and logwood. For olives, pad in mixtures of red liquor and iron liquor, diluted, and dye in bark, or bark and logwood. The acid used may be No. 33.

l. Bark dyeing—Dye 10 pieces with 25 lbs. bark, and 3 quarts bone size; heat to 190° in 1½ hours, and keep at 190° 10 minutes, wash and bran at 160° 10 minutes wash and dry.

m. Bark and Logwood dyeing.—Dye 10 pieces with 20 lbs. bark, and 30 oz. prepared logwood, with 3 quarts bone size; heat as in bark dyeing.

Fifth Style: Indigo.

The indigo dyehouse is always on the ground floor of a building, and is fitted up with a number of stone vats let into the ground. There are generally several rows of these vats, about 3 feet apart. They are about 8 feet long by 4 feet wide, and 8 to 10 feet deep. Some of them have steam pipes inserted, which go to near the bottom, so that they can be heated when necessary. There are about 10 vats in a row.

A. *Blue and white.* The simplest form of blue styles is blue and white; dark blue ground with white figures. The cloth is printed in one of the following reserve pastes:—

No. 65. *Reserve paste for Block.*—3 lbs. sulphate of copper dissolved in 1 gallon of water, 15 lbs pipeclay, beat up with some of the liquor; 1 gallon of thick gum Senegal solution, and 1 quart of nitrate of copper at 80° T.

No. 66. *Reserve paste for Machine.*—2½ lbs. sulphate of copper, 1 gallon of water, thickened with 9 lbs. flour, and 2 lbs. dark British gum.

No. 67. *Reserve paste for Machine.*—5 lbs. sulphate of copper, 2 lbs. white acetate of lead, 2 gallons water dissolve and thicken the clear with 3 lbs. flour and 2 lbs. pale British gum; when cold, add half a pint of nitrate of copper at 80° T., to every 2 gallons of colour.

No. 68. *Reserve paste for Machine.*—4 gallons boiling water, 16 lbs. of sulphate of copper, 8 lbs. white acetate of lead, let settle and pour off the clear liquor; thicken 3 gallons of this with 8 lbs. of flour, and 4 lbs. pale British gum. When boiled, add 4 lbs. sulphate of zinc, and dissolve. The foregoing are all to resist deep shades of blue, for light shades of blue dipping any of the following.

No. 69. *Mild paste for Block.*—25 lbs. dark British gum, 15 quarts of water, boil 10 minutes and add 7½ lbs. soft soap; stir well in, and when mixed, add 20 lbs. sulphate of zinc, stir well in, and add 10 lbs. pipe clay beaten up into 7½ quarts of water, and 7½ gills of nitrate of copper at 80° T. Mix all well together.

No. 70. *Mild paste for Machine.*—8 lbs. dark British gum; 3¾ quarts water; boil and add 2 lbs. soft soap, cool, and add 6 lbs. sulphate of zinc dissolved in 2 quarts of boiling water and 1 quart of nitrate of copper at 80° T.

After printing in one of these reserves, hang in a rather humid atmosphere for 2 days, and then dip blue.

Indigo for use in the dyehouse is ground with water to a fine pulp; a series of cast-iron mills with curved bottoms, are arranged in a line: one or two iron rollers are moved backwards and forwards on the curved bottom in each mill by an upright rod, which is furnished with a roller at the bottom, and is connected with a horizontal rod worked by an excentric. Indigo and a certain quantity of water are left in these mills several days, till the pulp is perfectly smooth. The method of blue dipping is as follows.

In a line of ten vats, the first one is set with lime; as—

(No. 1). 1000 gallons water, 250 lbs. of hydrate of lime, or lime slaked to a dry powder; when used it is well raked up.

The indigo vats vary according to the style of work; for deep blue and white, or blue and yellow, or orange, the following is a good one:—

(No. 2.) 1000 gallons water, 50 lbs. indigo previously pulped, 140 lbs. copperas, and

Digitized by Google

170 lbs. lime; dissolve the copperas in the water, then add the indigo, stir well up, and add the lime, previously riddled, to separate small stones. Rake up every two hours for two days, and let settle clear. The clear liquor, when taken up in a glass, must have a deep yellow colour, be perfectly transparent, and be immediately covered with a pellicle of regenerated indigo when exposed to the air. Eight or nine vats are all set alike.

The pieces to be dipped are hooked backwards and forwards on a rectangular frame which just fits the vats, so that the cloth can be immersed, but still not so deep as to touch the sediment of the vats. The process is thus performed:—The lime-vat No. 1 being stirred up, the frame, which contains two pieces, is lowered down into it, so as to completely immerse the pieces; a gentle up and down movement is given by hand. The frame is allowed to stay 10 minutes in, is then lifted out and supported over the vat by rods put across. After draining here a few minutes it is then removed and immersed in vat No. 2, or the first indigo vat. It stays here seven minutes, is lifted out, and drained as before over the vat 8 minutes, then removed to No. 3 vat, and so on till it has gone through the whole series, or till the shade of blue is considered strong enough. After the last dip the pieces are unhooked and winced in a pit of water, then winced about 10 minutes in a pit containing sulphuric acid at 6° T., washed well in the wheel, squeezed, and dried. In large dyehouses there is an arrangement for collecting all the waste indigo which is washed off the pieces, by running all the water used into a vaulted chamber under the dyehouse, where it passes from one compartment to another, gradually depositing the suspended indigo, which is periodically removed.

In heavy bodies of colour, the paste sometimes slips or the shapes become irregular; this is counteracted by using the first indigo vat raked up instead of clear. The vats are used till nearly exhausted, and then the clear liquor pumped off to be used instead of water for setting fresh vats with.

B. *Blue and Yellow, or Orange.*—Print in one of the reserve pastes, and yellow or orange colour made as follows:—

No. 71. *Chrome-yellow for Machine.*—2 gallons water, 20 lbs. sulphate copper, 20 lbs. nitrate of lead; dissolve, and beat up with 12 lbs. flour, and 2 gallons sulphate of lead bottoms; boil all together.

The sulphate of lead here is the by-product in making red mordant No. 8, and is drained to a thick paste.

No. 72. *Orange.*—Make a standard liquor by dissolving 24 lbs. white acetate of lead in 6 gallons water, and stirring 12 lbs. litharge in it till perfectly white, then let settle, and use the clear.

For the orange colour take 2 gallons of this standard liquor, instead of the gallons of water in the above yellow colour.

Follow the same routine in dipping, &c., as for blue and white. After wincing in sulphuric acid sours, wash well, and wince 10 minutes in bichromate of potash solution, ½ oz. per gallon at 100° F. Wash well, and wince in dilute muriatic acid at ½° T., containing 1 oz. oxalic acid per gallon, till the yellow is quite bright. The small quantity of chromic acid set free oxidises and destroys the indigo that may be attached to the yellow colour. After this souring, wash and dry.

If orange was printed instead of yellow, treat as for yellow; and after the murio-oxalic sour, wash, and raise orange in the following:—10 lbs. bichromate of potash, 300 gallons water, and sufficient slaked lime to make slightly milky; heat to 180° F., and wince the pieces in till the orange is full and bright; then take out and wash well, and dry.

Other varieties of blue dyeing are:—

C. Two blues.

D. Two blues and white.

E. Two blues, white, and yellow or orange.

F. Dark blue and green.

G. Two blues and yellow.

For C and E a pale shade of blue is first given the cloth. The light blue vat is thus composed:—

(No. 3.) *Light Blue Vat.* 1000 gallons water, 40 lbs. indigo, 70 lbs. copperas, 80 lbs. lime. For C. Dip light blue by three immersions, drawing well between; unhook, wince in water, then in sulphuric sours at 2° T.; wash, squeeze, and dry; then print on a reserve paste, and proceed as for dark blue and white; when finished, the pale blue having been protected by the reserve, has remained unaltered, all the rest being dark blue.

For F. Instead of reserve paste, print on yellow No. 71, and dip dark-blue, sour and raise the yellow with bichromate of potash, omit the souring after chroming, and wash and dry. The yellow falling on the pale blue, makes a green.

For D. On white cloth print an object in muriate of manganese, thickened with

Digitized by Google

dark British gum, raise this as described under the head *Bronzes*, dry and block in a reserve paste No. 65, then lime and dip in the dark blue vat, letting stay in half an hour, remove, oxidise in the air, wash and sour with dilute muriatic acid to which some muriate of tin liquor has been added, wash and dry; where the peroxide of manganese had been is now dark blue, the ground pale blue with white object.

For E. Print as D, with yellow or orange in addition, and after the sulphuric sours, raise yellow or orange as before.

Dip light blue; print reserve paste and yellow; dip dark blue; wince; sour in sulphuric sours at 6° T.; wince in water; chrome at 140° F. 10 minutes at 2 oz. bichromate per gallon; wince, wash, and sour in the following: — 7 lbs. oxalic acid, 3 lbs. strong sulphuric acid; dilute with water to standard 8° T.; wince till the yellow is bright; then wash and dry.

A style formerly very much in vogue, but now scarcely ever used, is the neutral or Lazulite style. It consists in combining mordants with reserves, and dipping blue; the colours throw off the blue, and are subsequently dyed with madder.

Neutrals are of two sorts. —

1. Where reds and chocolate, or black, with resist white are printed, and dipped light blue, the resist white being only required to resist the blue.

2. Where the white is required to cut through the block, reds or chocolate in addition to the blue.

The following are examples of lazulite colours for the first variety.

No. 73. *Black* (*Machine*). — 4 quarts logwood liquor at 12° T., 1 quart gall liquor at 9° T., 1 quart red liquor at 20° T., 1 quart iron liquor at 24 T., 1 quart acetic acid, thicken with 3 lbs. flour, and 8 oz. starch: when boiled, add 1 pint Gallipoli oil, and 1 pint turpentine.

No. 74. *Chocolate* (*Machine*). — 5 quarts red liquor at 12° T., 1 quart iron liquor at 24° T., 1½ lbs. sulphate of copper, 24 oz. measure of nitrate of copper at 100° T., thicken with 2½ lbs. flour, and ½ lb. dark British gum.

No. 75. *Chocolate* (*Block*). — 5 quarts red liquor 12° T., 1 quart iron liquor 24° T., 2½ lbs. sulphate of copper, 36 oz. measure nitrate of copper at 100° T., 9 lbs. pipe clay beat up well, and add 3 quarts of gum Senegal solution at 5 lbs. per. gallon.

No. 76. *Dark resist Red* (*Block*). — 2 quarts red liquor 22° T., 5¾ oz. white acetate of lead, 4¼ oz. sulphate of copper, dissolve, and beat up in it 6½ lbs. pipe clay. Thicken separately 2 quarts red liquor at 12° T., with 12 oz. flour, and add when boiling hot 8 oz. of soft soap melted; mix well, add the pipe clay mixture to this, and then 2 quarts red liquor at 2° T., thickened by dissolving gum Senegal in it. Stir the whole well together.

No. 77. *Dark resist Red* (*Machine*). — 20 quarts nitrate of zinc at 36 B., 10 quarts water coloured with a little peachwood, 12½ lbs. alum, 10 lbs. acetate of lead, dissolve all together with heat, stir till cool, thicken all together with 8 lbs. flour, and 1½ lbs. dark British gum.

No. 78. Any shade of pale red is made for block by substituting the red liquor in colour No. 76 by the mordant No. 8. reduced with water, according to the shade wanted.

No. 79. Any shade of pale red for machine is made by reducing the quantities of alum and acetate of lead in colour No. 77.

The white reserve for this variety of neutrals is either of the mild pastes.

No. 80. *Resist Brown*. — 2 gallons water, 24 lbs catechu, 6 lbs. sal ammoniac, 1 gallon acetic acid; boil 15 minutes, and add 7½ gallons gum solution, 5 quarts nitrate of copper at 100° T.

Process. — The colours after printing are aged 3 days, then dipped light blue in the following blue vat.

(No. 4.) *Neutral vat* — 1000 gallons water, 120 lbs. indigo, 135 lbs. copperas, 150 lbs. lime; rake up for two days, and let settle.

A frame with rollers top and bottom is lowered into this, and the pieces are run through; after leaving the vat, they are made to travel over rollers in the air for a sufficient distance to turn them blue; then into a pit of water, from that into a beck with cowdung and water, at 160° F., where they run 15 minutes, then washed and dyed madder or garancin, &c. &c.

In the second variety of neutrals, the white is required to resist both mordants and blue, and is made thus: —

No. 81. *Neutral White for Blocks*. — 7 quarts lime juice at 30° T., 1 quart water, 4½ lbs. sulphate of copper, 24 lbs. pipe clay, 3½ quarts lime juice at 30° T., previously thickened with gum Senegal.

No. 82. *Neutral White for Machine*. — 1 gallon lime juice at 42° T., 2 lbs. sulphate of copper, 32 oz. measure nitrate of copper at 100° T., thickened with 1½ lbs. starch.

The black is the ordinary madder or garancin black, Nos. 4 and 5 process.

The neutral white is first printed either by block or machine; if the latter, it cannot

Digitized by Google

be in a pattern which should register accurately with the subsequent colours, as it must be dried perfectly before the other colours are printed, to avoid obtaining irregular shapes; the above reserve colours are then printed over the neutral white. Mild paste Nos. 71, 72 may also be printed along with the other colours, to reserve a white under the blue only. The subsequent process is the same as for the first variety.

After dyeing madder and garancin, and clearing with soap, &c., steam or spirit colours are generally blocked in. Parts of the yellow being made to fall over the blue form green.

Sixth Style: China Blues.

China blues, so called from the shade of blue resembling that on porcelain. In this style indigo is printed on, and made to penetrate and fix in the cloth by the subsequent process.

The colour is made thus: —

No. 83. *Standard China Blue.*— In an indigo mill are put 45 lbs. indigo, 9 gallons iron liquor at 24° T., and 18 lbs. copperas, the whole ground till quite fine; then add 7½ gallons gum Senegal solution at 6 lbs. per gallon; grind an hour longer, take out and wash the mill with 6 quarts hot water, and add to the above.

No. 84. *China blue gum.* — Gum Senegal solution at 3 lbs. per gallon, containing 4 oz. copperas per gallon.

Colours are made by reducing the standard blue with the gum, according to the pattern and strength required. For instance, for two blues of medium shades: —

No. 85. *Strong Blue.*—1 volume standard, 2 volumes gum.

No. 86. *Pale Blue.*—1 volume standard, 10 volumes gum.

After printing, age one night, and raise as follows: — Two vats similar to indigo vats are set. No. 1. 1000 gallons water, 500 lbs. slaked and dry lime. — No. 2. Solution of copperas at 5° T. In each vat is lowered a frame, which is provided with rollers at top and bottom, and in addition, has a pair of bushes at each side of the frame, just above the surface of the liquor, in which are put beams, on which the pieces are wound alternately; the bearings of the beams being just above the surface of the liquor, allows the roll of pieces to be always half in and half out of the liquor. The course of proceeding is this: — A beam containing two or three pieces stitched end to end is placed on a small frame at one side of vat No. 1, and by means of a cord previously threaded through the rollers in the vat, the pieces are slowly wound through the vat and on to a beam placed in the bearings at the opposite side of the vat, by means of a winch handle fitted on this beam; when the pieces have thus passed through vat No. 1, which is kept in a milky state all the time, the beam is lifted out and transferred to one of the pair of bearings in vat No. 2; the pieces are wound through this vat in the same manner; after this vat, they are removed to No. 1 vat, and worked through; this alternate liming and copperasing is continued till the pieces have been 4 times through each vat; then detach and wince in water; then put into sulphuric sours at 10° T., immersing completely in the liquor till the whites appear quite clear; then wash well, soap in a beck at 120° F. a quarter of an hour with a ¼ lb. soap per piece; wash again and sour in sulphuric sours at 1° T. at 110° F.; wash well and dry.

The various phenomena which occur in the dipping of China blues are not difficult of explanation with the lights of modern chemistry. We have, on the one hand, indigo and sulphate of iron alternately applied to the cloth; by dipping it into the lime, the blue is deoxidised, because a film of the sulphate of iron is decomposed, and protoxide of iron comes forth to seize the oxygen of the indigo, to make it yellow-green, and soluble at the same time in lime-water. Then, it penetrates into the heart of the fibres, and, on exposure to air, absorbs oxygen, so as to become insoluble and fixed within their pores. On dipping the calico into the second vat of sulphate of iron, a layer of oxide is formed upon its whole surface, which oxide exercises an action only upon those parts that are covered with indigo, and deoxidises a portion of it; thus rendering a second dose soluble by the intervention of the second dip in the lime bath. Hence we see that while these alternate transitions go on, the same series of deoxidisement, solution, and re-oxidisement recurs: causing a progressively increasing fixation of indigo within the fibres of the cotton.

Other indigo styles are dipped greens, blue with white discharge.

Dipped Greens. — There are 4 vats similar to indigo vats in a row, set with: —

First: (No. 5.) *Light blue Vat for Greens.*—1000 gallons water, 25 lbs. indigo, 45 lbs. copperas, 65 lbs. lime, dry slaked, 17 lbs. caustic soda, 24° T.; raked up 2 days, and settled clear.

Second: (No. 6.) *Yellow Vat for Greens.*—1000 gallons water, 250 lbs. brown acetate of lead, 130 lbs. dry slaked lime; rake up till dissolved, and let settle clear.

Third: (No. 7.) Filled with water only.

Fourth: (No. 8.) Set with bichromate of potash at 4° T.

Each of these vats is mounted with a frame with rollers top and bottom; the

Digitized by Google

pieces to be dipped are stretched end to end, and a length of cord being threaded through all the vats and fastened to a drawing roller at the end of the fourth, the pieces are drawn slowly through between the first and second; the cloth is made to travel several yards so as to ensure oxidation of the indigo before going into the lead vat; after leaving the fourth, they are detached, winced, and washed well.

For dipped greens, either white cloth is printed in patterns, as spots, &c. with mild paste, Nos. 69, 70; or a pattern previously printed in madder colours and dyed, &c. is covered up with mild paste by block; the cloth being now dipped green, the pattern or spots are reserved or untouched by the green: a very good effect is produced by dipping the Burgundy and acid No. 4, green, when the Burgundy part comes out a beautiful chocolate, and the white part green.

Acid Discharge on Blue. — A blue and white style, but which permits the most delicate pattern to be printed, which is not the case with the ordinary blue and white style. The cloth is first dipped a medium shade of blue, washed and dried, then padded in bichromate of potash at 6° T., and carefully dried in the shade, without artificial heat, and printed in the following colour: —

No. 87. *White Discharge for Blues.* — 1 gallon water, thicken with 2 lbs. flour, and 2 lbs. dark British gum; when partly cooled, add 2 lbs. oxalic acid, and when quite cold, 7½ oz. measure sulphuric acid. A few seconds after the colour is printed on the padded cloth the blue is discharged, and a dirty white left in the printed parts; after printing, the pieces are dried so as to leave them slightly damp, and immediately winced in chalk and water, then winced in sulphuric sours at 2° T., winced and well washed; the printed pattern is now a pure white, and if care has been taken not to dry the bichromate too hard, and not expose it to sunlight, the blue is bright and good.

This ingenious process was the invention of Mr. John Mercer. At the moment the block applies the preceding discharge to the bichromate dye, there is a sudden decoloration, and a production of a peculiar odour.

The pieces padded with the bichromate must be dried at a moderate temperature, and in the shade. Whenever watery solutions of chromate of potash and tartaric acid are mixed an effervescence takes place, during which the mixture possesses the power of destroying vegetable colours. This property lasts no longer than the effervescence.

Seventh Style: Discharge on Turkey Red Ground.

No. 88. *White Discharge (Machine).* — 8 lbs. light British gum, 1 gallon tartaric acid liquor 62° T., 1 gallon acetic acid 6° T.

No. 89. *White Discharge (Block).* — The above colour a little thinner.

No. 90. *Black for Turkey Red.* — 7 gallons logwood liquor at 8° T., 1 gallon pyroligneous acid, 10 lbs. starch; boil and add 2 lbs. 10 oz. copperas; boil again and cool, then add 3½ pints pernitrate of iron at 80° T., and 1 gallon of blue paste.

No. 91. *Blue Paste.* — (*a*) 6 lbs. copperas, 2 quarts water; dissolve. (*b*) 4 lbs. prussiate of potash, 1 gallon of water; dissolve. Mix *a* and *b* together, and add 1 quart standard red liquor No. 8, 1 quart nitric acid 60° T.

No. 92. *Yellow Discharge (Block).* — 1 gallon lime juice at 50° T., 4 lbs. tartaric acid, 4 lbs. nitrate of lead; dissolve, thicken with 6 lbs. pipeclay, and 3 lbs. gum Senegal.

No. 93. *Yellow Discharge (Machine).* — Thicken the above with 1½ lbs. starch, instead of the pipeclay and gum.

No. 94. *Yellow Discharge (Machine).* — 1 gallon lime juice at 40° T., 4½ lbs. tartaric acid, 5 lbs. white acetate of lead, 1¼ lbs. starch; boil and cool, then add 1 lb. 14 oz. nitric acid, at 60°.

No. 95. *Blue Discharge (Machine).* — (*a*) 1 lb. Prussian blue, 1 lb. oxalic acid, 1 quart hot water; grind well together, and leave to react on each other 24 hours; then (*b*) 3 quarts of water, 1¼ lbs. starch; boil, and add 2 lbs. tartaric acid, and mix *a* and *b* together.

No. 96. *Green Discharge (Machine).* — 1½ gallons No. 95 blue, 1 gallon No. 94 yellow. Process: — Print in any of the above colours, and as soon as dry from the machine, put through the decolouring vat.

(No. 9.) *Decolouring Vat.* — 1000 gallons water, 1000 lbs. chloride of lime; rake well up, till quite smooth and free from lumps, then immerse a frame with rollers top and bottom, as in dipping greens, &c.; keep the vat stirred up so as to be milky, and run the pieces through at the rate of 1 piece of 28 yards in 3 minutes; on leaving the squeezing rollers, conduct into water and rince, then wince 10 minutes in bichromate of potash at 4° T.; wash and wince in very dilute muriatic acid; wash well and dry.

In this style, such is the permanence of the Turkey red dye, that it is not much altered by passing through chloride of lime, whilst in the parts printed in the discharge colours, an instantaneous disengagement of chlorine takes place, which decolourises the dyed ground, and where a mineral colour or mordant formed part of the discharge, it is left in place of the red dye. This style was invented in 1811 by M. D.

Digitized by Google

Kœchlin, and patented in England by Mr. James Thompson, of Primrose, who printed immense quantities of it.

The Bandanna printing, being a business of itself, is more fitly described in another place. (See BANDANNA.)

Eighth Style: Steam Colours.

The printing of steam colours may be considered as a mode of dyeing at one operation, for in most cases one or more mordants are mixed with dye-wood decoctions, and printed on the cloth, the subsequent steaming causing the mordant to combine with the colouring matter, and both with the cloth. Steam colours in some cases are made so as to produce a fair colour when printed on ordinary white calico; but much superior colours are produced by mordanting the cloth first, so as to fix peroxide of tin in the fibre; and as this is the almost universal rule, it is this sort of steam printing alone that will be described. Woollen fabrics, indeed, require a good preparation by tin, &c., before lively and substantial colours can be fixed on them by steam.

The following is the mode of preparing calicoes for steam colours:—

Pad the pieces stitched together, in a padding machine with wooden bowls, through a solution of stannate of soda at 10° T. twice over, letting them lie wet an hour between; immediately after padding the second time, run through a cistern with rollers, containing dilute sulphuric acid at 1½° to 3° T., thence into a pit of water, wince well, and run through a washing machine. It has been observed by Mr. James Chadwick, that if the cloth, with oxide of tin newly precipitated on it, is subjected to any severe washing, it loses a considerable quantity of oxide, so that no more washing must be given at this stage than will remove the free sulphuric acid. It appears that the cloth, once dried with the oxide in it, does not part with the oxide again by severe washing. After washing, the pieces are unstitched, and put in the hydro-extractor, then dried gently over the steam cylinders, and are then ready for printing.

The following list of steam colours comprises the usual variety of shades printed on calico:—

No. 97. *Steam Black (Machine).*—1 gallon logwood liquor at 12° T., 1 quart gall liquor at 9° T., 1 quart mordant, 2 lbs. flour, 6 oz. starch; boil 10 minutes, and add ½ pint nitrate of iron.

Steam Black Mordant.—1 quart acetic acid, 1½ quart acetate of copper at 3° T., 1½ quart iron liquor at 24° T., 1 quart red liquor at 20° T.

No. 98. *Chocolate (Machine).*—3 gallons logwood liqnor at 12° T., 2 gallons Sapan liquor at 12° T., 1 gallon nitrate of alumina, ½ gallon bark liquor at 12° T., 4 gallons water, 17 lbs. starch; boil, and add 8 oz. chlorate of potash, 2½ lbs. red prussiate.

No. 99. *Dark Blue (Machine).*—7 gallons water, 14 lbs. starch, 2¾ lbs. sal ammoniac; boil, and add whilst hot 12 lbs. yellow prussiate of potash in powder, 6 lbs. red prussiate of potash, 6 lbs. tartaric acid, and when nearly cold, 1 lb. sulphuric acid (specific gravity 1·85), 1 lb. oxalic acid dissolved in 2 quarts hot water, and 6 gallons prussiate of tin pulp.

No. 100.—*Dark Blue.*—8 quarts water, 4 lbs. yellow prussiate of potash, 3 lbs pale British gum; boil, and add 1 lb. bisulphate of potash, 2 lbs. muriate of ammonia, 8 oz. alum, 4 oz. oxalic acid, 4 oz. sulphuric acid at 170° T., 4 quarts tin pulp No. 103.

No. 101. *Cinnamon.*—1 quart cochineal liquor at 8° T., 1 quart logwood liquor at 8° T., 1 quart berry liquor at 10° T., 6 oz. alum, 4 oz. cream of tartar, 8 oz. starch; boil, and whilst warm add 3 oz. muriate-of-tin crystals.

No. 102. *Orange.*—12 lbs. annatto, 1 gallon caustic soda at 70° T., 5 gallons water; boil 20 minutes, strain, and add 3 quarts red mordant No. 146, 6 lbs. alum; heat till clear, and add 4 gallons thick gum-substitute water.

No. 103. *Tin Pulp.*—To protochloride of tin solution add as much yellow prussiate of potash in solution as will precipitate all the tin as ferroprussiate; this is washed by decantation, and filtered to a stiff paste.

No. 104. *Light Blue for Machine.*—1 gallon dark blue No. 99, 3 gallons 4-lb. gum-substitute water.

No. 105. *Green (Machine).*—7 gallons Persian-berry liquor at 12° T., 15 lbs. yellow prussiate of potash, 8 lbs. alum, 28 lbs. gum-substitute; boil, and add 2 lbs. muriate-of-tin crystals, 2 lbs. oxalic acid.

No. 106. *Pink (Machine).*—4 gallons cochineal liquor at 6° T., 2 lbs. alum, 2 lbs. bi-tartrate of potash, 8 oz. oxalic acid, 4 gallons thick gum-Senegal water.

No. 107. *Purple (Machine).*—2 gallons logwood liquor at 12° T., 12 oz. alum, 8 oz. red prussiate of potash, 4 oz. oxalic acid, 8 gallons gum-substitute water. If for block, add 12 gallons gum water instead of 8 gallons.

No. 108. *Dark Red (Machine).*—8 quarts Sapan liquor at 12° T., 2 quarts bark liquor at 8° T., 2 quarts nitrate of alumina No. 109, 6½ lbs. starch, 1 lb. gum-substitute, 4 quarts water, 4 oz. chlorate of potash, 12 oz. alum.

Digitized by Google

No. 109. *Nitrate of Alumina.*—8 gallons boiling water, 24 lbs. nitrate-of-lead crystals, 24 lbs. alum, 5 lbs. carbonate-of-soda crystals; let settle, and use the clear.

No. 110. *Blue Standard.*—1 gallon water, 12 oz. alum, 4½ oz. oxalic acid, 1¾ lbs. yellow prussiate of potash, 1 gallon gum-substitute water.

No. 111. *Lavender Liquor.* — 2 gallons red liquor at 18° T., 6 lbs. ground logwood; let steep for 48 hours, then strain off the liquor.

No. 112. *Lavender.* — 4 gallons lavender liquor No. 111, 4 gallons blue standard No. 110, from 24 to 48 gallons gum water, according to shade wanted.

No. 113. *Drab.*—4 gallons lavender liquor, 4 gallons blue standard, 1 gallon bark liquor at 8° T., from 40 to 70 gallons gum water, according to shade wanted.

No. 114 *Stone.*—4 gallons lavender liquor No. 111, 6 gallons blue standard No. 110, 1 gallon bark liquor at 12° T., reduced same as drab.

No. 115. *Sage Green for Blotch Grounds.*—2 gallons yellow No. 48, 2 gallons blue standard No. 110, from 28 to 56 gallons gum water, according to shade wanted.

No. 116. *Yellow.*—4 gallons berry liquor at 12° T., 1½ lb. alum.

No. 117. *Brown Standard.* — 14 quarts bark liquor at 12° T., 3½ quarts Sapan liquor at 12° T., 1½ quarts logwood liquor at 12° T., 12 quarts 8-lb. gum-substitute water, 3½ lbs. alum. 2 oz. chlorate of potash, 5 oz. red prussiate. All shades of light browns are made from this by reducing with gum-substitute water, according to shade wanted.

No. 118. *Yellow.*—4 gallons bark at 8° T., 2 quarts red liquor at 18° T., 2 quarts nitrate of alumina No. 109, 12 oz. tin crystals, 5 lbs. starch.

No. 119. *Green for Block.*—28 lbs. yellow prussiate of potash, 6 gallons hot water; in a separate vessel 10 gallons 6-lb. gum-Senegal water, 2 gallons water, 1 gallon muriate of tin at 120° T.; mix the prussiate solution with the tin and gum by pouring one into the other, and violently agitating; when quite fine and free from flocculent matter, add 12 gallons berry liquor at 10° T., then add 12 lbs. and 2½ lbs. oxalic acid dissolved in 5 gallons water, then 3 quarts acetic acid, and 2½ gills extract of indigo.

No. 120. *Brown.* — 6 quarts berry liquor at 20° T., 6 quarts Brazil-wood liquor at 8° T., 3 lbs. alum, 3 quarts lavender liquor, 6 quarts 6-lb. gum-Senegal water, 24 oz. nitrate of copper at 100° T.

After printing, the pieces are hung for some hours to equalise their temperature, and are then steamed.

There are two methods of steaming now commonly employed — the column and the chest. The column is a hollow cylinder of copper, from 3 to 5 inches in diameter, and about 44 inches long, perforated over its whole surface with holes of about $\frac{1}{16}$th of an inch, placed about $\frac{1}{4}$ of an inch asunder. A circular plate, about 9 inches diameter, is soldered to the lower end of the column, destined to prevent the coil of cloth from sliding down off the cylinder. The lower end of the column terminates in a pipe, mounted with a stopcock for regulating the admission of steam from the main steam boiler of the factory. In some cases, the pipe fixed to the lower surface of the disc is made tapering, and fits into a conical socket, in a strong iron or copper box, fixed to a solid pedestal; the steam pipe enters into one side of that box, and is provided, of course, with a stopcock. The condensed water of the column falls down into that chest, and may be let off by a descending tube and a stopcock. In other forms of the column, the conical junction pipe is at its top, and fits there into an inverted socket connected with a steam chest, while the bottom has a very small tubular outlet, so that the steam may be exposed to a certain pressure in the column when it is encased with cloth.

The pieces are lapped round this column, but not in immediate contact with it; for the copper cylinder is first enveloped in a few coils of blanket stuff, then with several coils of white calico, next with the several pieces of the printed goods, stitched endwise, and lastly, with an outward mantle of white calico. In the course of the lapping and unlapping of such a length of webs, the cylinder is laid in a horizontal frame, in which it is made to revolve. In the act of steaming, however, it is fixed upright, by one of the methods above described. The steaming lasts for 20 or 30 minutes, according to the nature of the dyes; those which contain much solution of tin admit of less steaming. Whenever the steam is shut off, the goods must be immediately uncoiled, to prevent the chance of any aqueous condensation. The unrolled pieces are free from damp, and require only to be exposed for a few minutes in the air to appear perfectly dry. Were water condensed during the process, it would be apt to make the colours run.

The other method of steaming, and the one now most generally employed, is that of the chest. This is a rectangular iron chamber, with penthouse top; its dimensions are about 12 feet in length by 6 feet in width, by 9 feet in height at the highest part. It is provided with closely-folding doors at one end, with a cross bar, which can be fastened with wedges or screws. There is a perforated false bottom, at the same

Digitized by Google

level as the room in which the steam chest stands; underneath the false bottom is a perforated pipe, running round three sides of the chest; this pipe admits the steam, which is further diffused by the holes in the false bottom. On the false bottom is laid a pair of rails parallel with the sides of the chest; these rails are continued outside the chest into the room, the parts next the chest for about 3 feet being hinged so as to be moved on one side when the doors are opened or shut. Upon the rails moves a rectangular frame of wood, which just fits inside the chest, and stands as high as the commencement of the slope of the roof. This frame, when drawn out into the room, is filled with pieces in the following manner:—They are first wound on an open reel, one by one, the selvages of each fold being kept as parallel as possible. The piece is then slid off the end of the reel, pulled flat, and a needle and thread passed through all the selvages of one side, and loops made, through which are passed wooden rods, which rest on the sides of the carriage. The pieces being thus suspended with selvages downwards, the carriage, being filled with the rods, is run into the chest, the doors firmly shut, and steam turned on, the steam escaping by a safety valve. They hang thus for 45 minutes, are taken out, unfolded, and loosely folded for washing off. They are next stitched end to end, and passed through a cistern with water, from that into a cistern containing a very weak solution of bichromate potash; they are then put in a washing machine, hydro-extracted, starched, and dried.

The colours that are fixed by steaming may, with one or two exceptions, be described as coloured lakes temporarily held in solution by acids, and during the steaming, the cloth gradually withdraws these lakes from solution, the acid being either dissipated or so modified as to be incapable of holding the lakes dissolved. The state of the steam is an important matter. It is not the heat alone that produces the effect; for it may easily be demonstrated that heating cloth, when printed and *dried*, has no effect whatever. The steam, to be effective, must be as saturated with moisture as possible, and for this reason the steaming apparatus should never be near the boiler: it is no disadvantage for the steam to travel a considerable distance before being applied. In some print works the steam is made to pass through water in a vessel placed below the steam chest, so that it arrives in the chest perfectly saturated with water. At the same time, the steam must not be of so low tension as to cause a deposit of moisture on the pieces, which would be very injurious, by causing the colours to run or mix. Steam blue depends for its fixation on the decomposition of ferrocyanic acid by the high temperature and presence of vapour water into white insoluble ferrocyanide of iron and potassium, which, by acquiring oxygen from the air or during the washing-off, becomes Prussian blue. The shade of it is much modified by the oxide of tin in the cloth and the prussiate of tin that forms part of the colour. It appears that tin substitutes iron, forming a compound ferrocyanide of tin and iron, or a ferro-stanno-cyanide of iron, which is of a deep violet-blue colour. Greens are mixtures of yellow lakes with the Prussian blue, formed by decomposition. In both these colours there is a large quantity of hydrocyanic acid disengaged during the steaming; steam being decomposed, its hydrogen going to form hydrocyanic acid.

Mousseline de laines are treated somewhat in the same manner, the preparation of the cloth being different, and the colours are made in such a manner as to fix equally on both the wool and the cotton of the fabric. The steaming and washing-off is nearly the same as for calicoes. The following is the method in detail:—

The cloth is first well bleached (see BLEACHING) and sulphured. This operation is usually performed by hanging the goods in a close stone or brick chamber. Trays of sulphur being lighted, the door is closed tight, and the pieces stay in the sulphurous gas for several hours, and are then removed and washed. An improvement on this method was patented by John Thom, and is here shown.

Thom's Sulphuring Apparatus.— *Fig.* 392. A is the roof, made of sheet lead, 4 lbs. to the foot. B is a lead pipe, of one inch diameter, taking off the excess of sulphurous acid to the flue. C and C are rolls of pieces, going in on one side and coming off at the other. D and D, rollers of wood, three inches in diameter, with iron centres at the ends. E and E, tiles, as in malt kilns, to let the gas pass up through to the cloth.

Fig. 393 shows the chamber; it is six feet in length by four feet in breadth, and about five feet high. There are two windows, which are placed opposite each other. F is a cast-iron tray for burning the sulphur. It is placed on a flag, inclining towards the chamber at about one inch to a foot. It is furnished with a slide, on which to put the sulphur to be pushed in, and to admit what air may be wanted. The space for air may be from half an inch to an inch wide. It costs 18*l.* to 20*l.*

Preparation.— Pad the pieces, previously well bleached (see BLEACHING), in a wooden padding machine through stannate of soda at 10° twice over, then pass through a cistern with rollers, containing dilute sulphuric acid at 3° T., wash gently, and partially dry, then pad through sulphomuriate of tin at 4° T. twice.

Digitized by Google

No. 121. *Sulphomuriate of Tin.* — 3 quarts muriate of tin at 120° T., 1 quart sulphuric acid at 170° T., mixed together gradually, and 4 quarts muriatic acid added; reduce to 4° T.

392

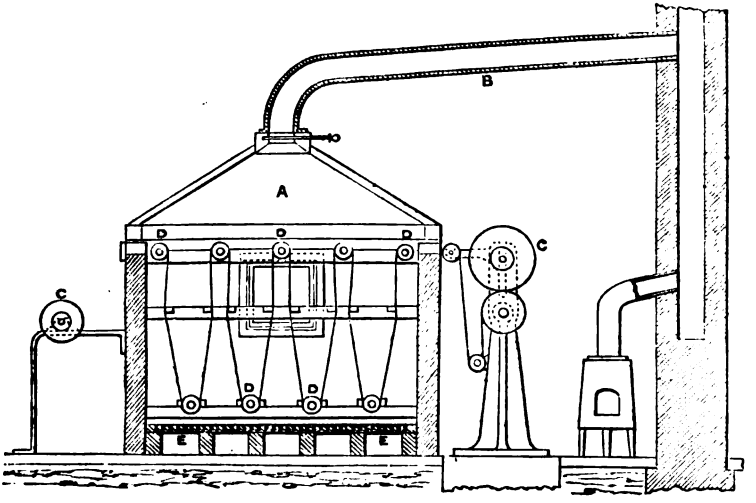

393

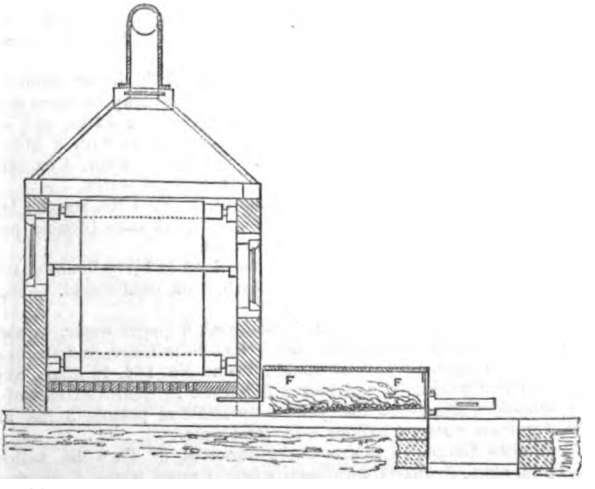

Run from this without washing into a large cistern with rollers, containing dilute chloride of lime at ½° T., then wash, put in the hydro-extractor, and dry. When wanted for printing, pad through gum-Senegal water at 8 oz. to the gallon, and dry. After printing they are hung the same as calicoes to equalise the temperature, then hung in the steam chest in the same manner as calicoes, and steamed 45 minutes. After steaming, they are unrolled and loosely folded for washing-off, which is done by wincing over a reel in a pit of water gently for ¼ of an hour, then transferred to a washing machine or large automatic wince reel, and washed till no more coloured liquor comes away, then hydro-extracted, and dried over the steam cylinders. After drying, it is found advantageous to hang the pieces in a cool room, with covered shutter sides, for a day or two, so that they may imbibe a little moisture, and the colours appear richer. The wool in mousseline de laines is apt to be partially decomposed during steaming, and sulphuretted hydrogen liberated, which decomposes the metallic salts, such as nitrate of copper, used in some colours, and produces a very

Digitized by Google

disagreeable effect, termed *silvering*. To avoid this, it is now customary to wind on the reel for steaming, at the same time as the printed piece, a grey or unbleached piece, which has been padded in a weak solution of acetate of lead, and dried. By this means the printed piece is steamed in contact with the prepared piece, and any sulphuretted hydrogen that may be disengaged is immediately absorbed by the acetate of lead.

The following are the colours used in mousseline-de-laine printing:—

No. 122. *Dark Red.*—4 gallons cochineal liquor at 10° T., 7 lbs. starch; boil, and when cooled to 180° F., add 1¼ lb. oxalic acid, and when this is dissolved, 1¼ lb. muriate-of-tin crystals.

No. 123. *Chocolate.*—6 gallons Sapan liquor at 12° T., 2 gallons logwood liquor at 12° T., 1 gallon bark liquor at 12° T., 16 lbs. starch; boil, and add 5¾ lbs. alum, 12 oz. chlorate of potash, 4½ lbs. red prussiate of potash.

No. 124. *Yellow.*—4 gallons berry liquor at 10° T., 5¼ lbs. starch, 1 lb. pale British gum; boil, and add 1¾ lb. muriate-of-tin crystals.

No. 125. *Dark or Royal Blue.*—6 gallons water, 6½ lbs. starch, 2¼ lbs. sal ammoniac; boil well, and add 6 gallons tin pulp No. 103; mix well into the paste, and add 16 lbs. pounded yellow prussiate of potash, 8 lbs. red prussiate, 24 lbs. tartaric acid, and 1½ lb. oxalic acid previously dissolved in 4 pints hot water.

No. 126. *Pale Blues* are made from the dark blue No. 125, by reducing with gum-substitute water; say 1 of dark blue and 7 of gum-water for pale blue, for two blues, and 1 of dark-blue and 14 of gum water for blotch or ground blue.

No. 127. *Green.*—4 gallons berry or bark liquor at 12° T., 3 lbs. alum, 6 lbs. starch; boil, and add 6 lbs. powdered yellow prussiate of potash, 1 lb. muriate-of-tin crystals, 1lb. oxalic acid, and 2¾ pints extract of indigo.

No. 128. *Pale-green.*—3 quarts berry liquor at 6° T., 1¾ lb. yellow prussiate of potash, 9½ oz. alum, ¾ pint acetic acid, 16 quarts 4-lb. gum-Senegal water, 8 oz. weight muriate-of-tin liquor at 12° T., ¾ pint extract of indigo.

No. 129. *Dark Brown.*—2½ quarts Sapan liquor at 8° T., 1 pint logwood liquor at 12° T., 5 quarts bark liquor at 10° T., 12 oz. alum, 1 oz. chlorate of potash, 6 lbs. gum substitute; boil, and add 4 oz. red prussiate of potash, 2 oz. oxalic acid.

No. 130. *Pale Browns* are made from the dark-brown No. 129, by reducing with gum water, say 1 to 3 or 1 to 5.

No. 131. *Pale Red.*—1 lb. fine-ground cochineal, 1 lb. liquor ammonia, specific gravity 0·88; put in a jar with tight-fitting cover, which may be luted down; keep in a warm place for 48 hours, then mix with 2 gallons boiling water, and simmer in a mug down to 1 gallon, then strain off, wash the cochineal with a little water, and strain again; to the liquor made up to 1 gallon add 4 oz. alum, 4 oz. muriate-of-tin crystals, 4 oz. oxalic acid, and 1 gallon 6-lb. gum-Senegal water.

No. 132. *Scarlet.*—2 gallons cochineal liquor at 12° T., 4 lbs. starch; boil, and add 4 oz. oxalic acid, 4 oz. binoxalate of potash, 8 oz. pink salts (double permuriate of tin and ammonia), and 8 oz. muriate-of-tin crystals.

No. 133. *Scarlet.*—3 gallons standard No. 136, 1 quart berry liquor at 10° T., 4¾ lbs. starch; boil, and add 8 oz. binoxalate of potash, 8 oz. oxalic acid, 1¼ lb. pink salts, ½ pint oxymuriate of tin at 120° T.

No. 134. *Standard.*—2 lbs. fine-ground cochineal, 6 quarts water, 1 quart red liquor at 20° T., 4 oz. nitric acid, 2 oz. oxalic acid; boil 20 minutes, and strain off.

No. 135. *Medium Blue.*—6 gallons standard blue No. 136, 1½ quart oxymuriate of tin at 120° T., added gradually, and beaten fine, then 2¼ quarts extract of indigo.

No. 136. *Standard Blue.*—10 lbs. yellow prussiate of potash, 3 lbs. alum, 2 lbs. oxalic acid, 4 gallons water, 4 gallons 6-lb. gum water.

No. 137. *Medium Green.*—8 quarts berry liquor at 8° T., 3 lbs. yellow prussiate of potash, 1½ lb. alum, 7 quarts 6-lb. gum water, 1 quart water, 1 quart acetic acid, 14 oz. weight muriate-of-tin liquor, 1 pint extract of indigo.

No. 138. *Lilac.*—8 quarts lavender liquor No. 111, 6 oz. oxalic acid, 2 oz. measure extract of indigo.

No. 139. *Lavender Liquor.*—2 gallons red liquor, 10 lbs. ground logwood; steep 12 hours, and strain off.

No. 140. *Dove.*—6 quarts blue for doves, No. 141, 4 quarts lavender liquor No. 111, 8 quarts 6-lb. gum-Senegal water.

No. 141. *Blue for Doves.*—5 quarts water, 2 lbs. yellow prussiate of potash, 2 lbs. alum, 5 quarts 6-lb. gum water, 1 pint extract of indigo.

No. 142. *Orange.*—3 gallons berry liquor at 10° T., 9 lbs. gum Senegal, 3 pints red mordant No. 146, 12 oz. muriate-of-tin crystals; boil 15 minutes.

No. 143. *Drab Standard.*—6 quarts purple liquor No. 144, 1 quart bark liquor at 10° T., ½ pint red liquor at 20° T., ¼ pint extract of indigo.

Drabs are made from this by reducing with gum water, about 1 to 3.

Digitized by Google

No. 144. *Purple Liquor.*—1 gallon lavender liquor No. 111, 3 oz. oxalic acid.

No. 145. *Silver-drab Standard.*—3 quarts gall liquor at 12° T., 2 quarts standard blue No. 136, 1 quart lavender liquor No. 111.

Colours reduced with gum water from this, 1 to 2 or 3.

No. 146. *Red Mordant.*—1 gallon water, 6 lbs. alum, 3 lbs. white acetate of lead; stir till dissolved, let settle, and use the clear.

No. 147. *Buff Standard.*—1 quart cochineal liquor at 8° T., 3½ quarts berry liquor at 10° T., 1 quart red mordant No. 146, 20 oz. oxalic acid.

Colours reduced from this with gum water.

No. 148. *Olive.*—1 quart lavender liquor No. 111, 2 quarts berry liquor at 10° T., 2 quarts 8-lb. gum-Senegal water.

In mousseline-de-laine printing success depends more on the bleaching and preparing of the cloth than in any other style. To Mr. John Mercer is due the merit of having effected an improvement in the preparation of woollen fabrics, the importance of which can hardly be overrated. Before his discovery of the power of prepared wool to absorb chlorine, mousseline de laines could only be effectively printed by block, which allows a large body of colour to be laid on, and the fibre supersaturated with it. Machine colours were meagre and dull. But mousseline de laines prepared with tin, and then subjected to the action of chlorine gas (as in the process given above, where the acid salt of tin remaining in the cloth disengages chlorine from the chloride of lime), have their power of absorbing and retaining colour considerably enhanced. The exact part the chlorine plays is not well known, probably a compound similar to the chloro-protein of Mulder is formed. The effect produced is not one, as might be supposed, of oxidation; but apparently a merely heightened power of the wool to assimilate colouring matter. Wool subjected to chlorine without tin is much improved in its capacity for colour, but nothing like the same when prepared with tin also. The whole of the chlorine may be removed from the cloth by passing through an alkali, which renders it necessary to give the stannate-of-soda padding previously to the chlorinating. It may fairly be assumed that the development of mousseline-de-laine printing by cylinder to the present perfection is due in a great measure to this chlorinating process. It ought also to be stated that, with rare liberality, Mr. Mercer gave the discovery to the trade, reserving for himself no right whatever.

Ninth Style: Spirit Colours.

Topical colours of great brilliancy, but possessed of very little solidity, are made somewhat like steam colours, but with much larger proportions of "spirits," by which term is meant the metallic salts and acids, which, combining with the dyestuff decoctions, give the peculiar tone and vivacity to these colours. These colours, from the large admixture of these salts, are necessarily very acid, and cannot be steamed without the destruction of the cloth. They are merely gently dried after printing, and hung in the ageing room for several hours, then rinsed in water, washed, and dried.

The following are examples of spirit colours:—

No. 149. *Black.*—1 gallon logwood liquor at 8° T., 1 gallon water, 10 oz. copperas, 3 lbs. starch; boil, and add ½ pint pernitrate of iron at 80° T.

No. 150. *Pink.*—1 gallon Sapan liquor at 8° T., 1 gallon water, 2 lbs. common salt, 1½ lb. starch; boil, cool, and add 1 pint oxymuriate of tin at 120° T., 3 oz. measure nitrate of copper at 80° T.

No. 151. *Blue.*—1 gallon water, 1 lb. yellow prussiate of potash, 6 oz. alum, 1¼ lb. starch; boil, and add ¾ pint nitrate of iron at 80° T., 1½ gill oxymuriate of tin at 120° T.

No. 152. *Brown.*—1 gallon berry liquor at 8° T., 2 lbs. light British gum; boil, and add 1 lb. muriate-of-tin crystals, 2 quarts spirit pink No. 150, 2 quarts spirit purple No. 153.

No. 153. *Purple.*—1 gallon logwood liquor at 8° T., 1 gallon water, 10 oz. copperas, 2 lbs. starch; boil, and add 1 pint protomuriate of iron at 80° T., 1 pint oxymuriate of tin at 120° T.

No. 154. *Orange.*—1½ gallon berry liquor at 8° T., 12 lbs. light British gum; boil, and add 6 lbs. muriate-of-tin crystals, 4 gallons spirit pink No. 150.

No. 155. *Chocolate.*—2½ gallons spirit pink No. 150, 1 gallon spirit blue No. 151.

No. 156. *Red.*—3 gallons Sapan liquor at 4° T., 1 lb. sal ammoniac, 1 lb. verdigris, 4½ lbs. starch; boil, cool, and add 5 lbs. pink salts, 1 lb. oxalic acid.

No. 157. *Yellow.*—1 gallon berry liquor at 10° T., ½ lb. alum, 1 lb. starch; boil, and add 1 pint muriate-of-tin liquor at 120° T.

No. 158. *Green.*—1 gallon spirit blue No. 151, 1 gallon spirit yellow No. 157.

No. 159. *Spirit Pink for blocking Madder Work.*—4½ gallons Brazil-wood liquor at 10° T., 9 lbs. pink salts, 3 lbs. sal ammoniac, 2 lbs. sulphate of copper, 5¼ oz. oxalic

Digitized by Google

acid dissolved in 1 pint water, 4½ gallons of 6-lb. gum-Senegal water, 1¼ quart oxy-muriate of tin at 120° T.

Tenth Style: Bronzes.

The cloth is padded in solution of sulphate of manganese, the strength of which determines the shade of brown produced; for a medium shade of brown, suitable for discharge colours, the liquor may be 80° T.

After padding and drying, pad the pieces through caustic soda at 24° T., and again through caustic soda at 12° T., wince well in water, and then in solution of chloride of lime at 2° T. till perfectly brown; wash well in water, and dry.

The colours for printing on this dyed ground are so made as to discharge the brown and substitute their own colour in place of it.

No. 160. *Blue Discharge.*—(*a*) 6 gallons water, 3¾ lbs. yellow prussiate of potash, 10 lbs. starch, 6 lbs. light British gum; boil, and add 12 lbs. tartaric acid, 6 lbs. oxalic acid, 1¼ quarts pernitrate of iron: then take (*b*) 5 quarts of this standard, 3 quarts muriate of tin at 120° T.

No. 161. *Discharge Yellow for Chroming.*—(*a*) 1 gallon water, 5 lbs. nitrate of lead, 4 lbs. light British gum; boil, and add 4 lbs. tartaric acid; then take (*b*) 3 quarts this standard, 1 quart muriate of tin at 120° T.

No. 162. *Discharge Green.*—2 quarts yellow standard No. 161 (*a*), 1 quart blue standard No. 160 (*a*), 1 quart muriate of tin at 120°.

No. 163. *Discharge Pink.*—(*a*) 2 gallons Brazil-wood liquor at 12° T., 4 oz. sulphate of copper, 4 oz. sal ammoniac, 4 lbs. starch; boil, and add 8 oz. measure oxy-muriate of tin at 120° T.: then take (*b*) 2 quarts of this standard, 1 quart muriate of tin at 120° T.

No. 164. *White Discharge.*—2 gallons water, 8lbs. light British gum; boil, and add 8 lbs. tartaric acid, and 1 gallon muriate of tin at 120° T.

Black.—Spirit black No. 149.

After printing, hang for a few hours, and wince in a pit with water freely flowing into it; then wince in chalky water, again in water, then wince in bichromate of potash at 4° T., to raise the green and yellow; wash and dry.

The discharging agent in these colours is the protomuriate of tin, which, by its superior attraction for oxygen, robs the peroxide of manganese of a portion. The protoxide of manganese formed by this change being then soluble in the acid, and subsequently washed away, the pigment Prussian blue and chromate of lead, also the Brazil lake, being left fixed in the discharged place.

Eleventh Style: Pigment Printing.

In this style the ordinary pigments, such as used in oil painting, are mechanically attached to the cloth by a species of cementing. The first fixing vehicle used was a solution of caoutchouc in naphtha, which was mixed with the pigment so as to make colours of sufficient viscosity to print. The naphtha was then driven off by steaming, and the pigment was then cemented to the cloth by a film of caoutchouc. This method makes very fast colours, not affected by soaping and moderate friction; but, unfortunately, the naphtha volatilising during the printing process, rendered the use of it too dangerous, and after it was found that explosions of the naphtha vapour frequently took place, calico printers turned their attention to some other fixing vehicle. Animal substances, of which the white of eggs is the type, and which, soluble in water, are coagulated by heat, are now usually employed. Of these, three may be particularised:—Albumen of eggs; lactarine; gluten.

The first is made by simply drying gently the white of eggs, and powdering.

The second is made by separating the solid part of buttermilk, purifying it from butter and free acid, and drying it.

The third is the residue of starch-making from wheat flour by the simple washing process, the gluten being gently dried.

The two latter thickeners require a small quantity of alkali to bring them in solution; they then resemble albumen in their power of coagulating by heat. There are few colours of this style printed, chiefly ultramarine blue and carbon drab.

No. 165. *Ultramarine Blue with Lactarine.*—1½ lbs. lactarine, 3½ pints water; mix well, and add 2½ oz. measure liquid ammonia specific gravity ·880, 5 oz. measure caustic soda at 32° T.; then having beaten up 3 lbs. ultramarine with 1¼ pint water, mix with the lactarine solution.

No. 166. *Ultramarine Blue with Albumen.*—4 lbs. ultramarine, 3½ quarts water; mix well, and add slowly 3 lbs. albumen in powder; let it stand a few hours, stirring occasionally; when dissolved, add 1 pint gum-tragacanth water at 12 oz. per gallon.

No. 167. *Ultramarine Blue with Gluten.*—6 lbs. ultramarine, 5 quarts water; mix, and add gradually 3½ lbs. ground gluten; let it stand a few minutes, then add 1 quart caustic soda at 16° T.; mix well, and let it stand a few hours before using.

Digitized by Google

Other shades of blue are made by altering the quantity of ultramarine.

No. 168. *Drab.*—3 lbs. lampblack. 3 pints acetic acid at 8° T.; mix well together, and add a solution of 3 lbs. albumen in 3 pints water; then add 3 pints 12-oz. gum-tragacanth water.

After printing these colours, steam half an hour, wince in water, and dry. Colours fixed in this manner are not intended to resist severe treatment.

Pencil Blue.—Before the introduction of steam blues and the species of indigo blues termed fast blues, the only blue that could be introduced into dyed prints was a solution of deoxidised indigo dissolved in caustic alkali: this at first was applied by the printer with a small flat bit of wood termed a pencil; he dipped this in the blue colour, and instantly applied it to the proper parts of the pattern, thus the colour arrived at the cloth before it had time to oxidise and the indigo to become insoluble. It is evident that this process was one of extreme clumsiness, as it required skill to apply the blue just to the proper places, and an apparatus for applying the blue, still called pencil blue, was at last devised. It consists of a copper case or box A, in which is laid

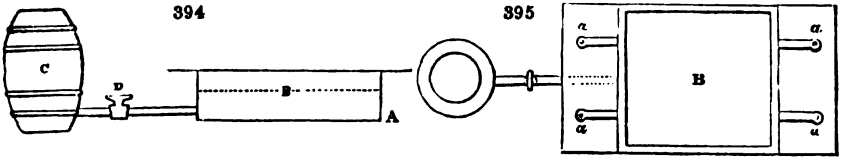

a frame B, filled with pretty stout canvas. The box communicates by a tube with the cistern C, mounted with a stopcock D. *Fig.* 395 represents the apparatus in plan: A, the box; B the canvas, with its edges *a a a a*, fixed by pin-points to the sides. The coloured is *teered*, or spread even, with a wooden scraper as broad as the canvas. In working with this apparatus, the colour being contained in the vessel C is drawn off into the case A, by opening the stopcock D, till it rises to the level of the canvas. The instant before the printer daubs the block upon the canvas, the *teerer*, boy or girl, runs the scraper across it to renew its surface; and the printer immediately transfers the colour to the cloth. In this kind of printing great skill is required to give evenly impressions. As the blue is usually applied to somewhat large designs, it is very apt to run; an inconvenience counteracted by dusting fine dry sand upon the cloth as soon as it is blocked. The goods must be washed within 24 hours after being printed.

Pencil blue, before the introduction of China blues, was printed by cylinder with a doctor-box.

No. 169. *Pencil Blue.*—10 gallons of pulp of indigo, containing 40 lbs indigo, 40 lbs. yellow orpiment, 11½ gallons of caustic soda at 70°T., 18½ gallons of water, 4 lbs. lime; boil till quite yellow, when spread on glass; let settle and thicken the clear with 120 lbs. gum Senegal.

Pieces printed in pencil blue are washed in water immediately after drying and sometimes soaped a little. Mr. Bennett Woodcroft, struck with the waste of indigo attending the printing of either China blue or pencil blue some few years ago invented and patented a method of printing pencil blue by the cylinder machine. His plan was to attach to an ordinary single-colour machine an Indian-rubber apparatus which enveloped the colour-box and piece after printing: this apparatus was filled with coal gas; a glass plate formed part of the long bag through which the piece travelled after printing, so as to enable the printer to see the progress of his work. By this means the deoxidised indigo was fairly applied to the cloth, and oxidation only ensued when the piece left the apparatus. The saving of indigo was said to be considerable, but the plan was not generally adopted.

Safflower Dyeing.—The beautiful but fugitive colouring matter of safflower is applied in the printing for dyeing a self colour, generally after the goods have been printed in black and red mordant, or black alone, and dyed madder or garancin. It is commonly used for cotton velvets, the colour given to velvet appearing very brilliant from the nature of the cloth. The process is as follows:—Safflower contains two distinct colouring matters; one yellow, being soluble in water; and the other pink, insoluble in water, the latter only being valuable. The yellow matter is therefore carefully washed away. To effect this, the safflower is put into canvas bags, 4 lbs. in a bag, and these bags put into running water and occasionally trodden upon till the water runs off perfectly colourless from them. 12 of these bags are then emptied into a cask with 90 gallons of water and 10 quarts of pearlash liquor at 24 T., stirred up for 2 hours: after standing all night, drain off the liquor, add 90 gallons more water and 3 pints of pearlash liquor; stir up well, and after standing for three hours, drain off again; this

Digitized by Google

weak liquor is saved for putting on fresh safflower: about 30 gallons of the safflower solution is put in a tub mounted with a wince over it, and a mixture of vinegar and lime juice is added to it till it is feebly acid to test paper. The carthamic acid, a red colouring matter of safflower, is thus precipitated, and remains as an exceedingly fine powder in suspension in the liquid; 2 pieces of 30 yards of velvet are put in and winced backwards and forwards 5 times, then wound upon the reel and allowed to stay there half an hour, then wince 5 times more, wind up again and let stay half an hour; wince again 5 times and wind up again; run off the liquor and put in 30 gallons of fresh liquor and acid as before; repeat the process wincing 3 times of 5 ends each, and letting lie wound on the reel half an hour each time; then take out and wince in very dilute acetic acid, hydro-extract, and dry. The pieces when wound on the reel should be opened out flat or they might be uneven. Carthamic acid, being of a resinous nature, has the property of attaching itself to cloth, and dyeing it a beautiful pink like the petals of a rose: this dye is very fugitive, strong sunlight even being injurious to it. There has been no way yet discovered of making it permanent.

MUREXIDE.— The purpurate of ammonia, or murexide, was discovered by Liebig and Wöhler in 1838, and in its pure state is one of the most beautiful products of chemistry. It is a crystalline substance of a beautiful metallic green, like the wings of the cantharides fly, and is produced when uric acid is dissolved in dilute nitric acid, the solution evaporated somewhat, and ammonia added; from the beautiful crimson liquid, murexide crystallises. This substance had, until a short time ago, no practical application. M. Albert Schlumberger discovered that metallic insoluble salts, possessing all the brilliancy of the original substance, could be made; and this fact was soon applied to a practical use by the French chemists, who succeeded in fixing a beautiful murexide crimson upon cotton cloth. The process was patented in this country for French interests in February, 1857, and is now in extensive use. The process is as follows:—

Print in the colour,

No. 170. 1 gallon water, 4 lbs. nitrate of lead, 1 lb. murexide, 1½ lbs. starch; boil. After printing, hang a few hours, then run through a cistern with rollers above and below, and provided with a cover, through apertures in which the pieces enter and leave. This cistern is kept supplied with ammoniacal gas; on leaving this cistern they pass into water, and from that into a cistern charged with 2 lbs. bichloride of mercury, 4 lbs. acetate of soda, ½ lb. acetic acid, 80 gallons water; run very slowly through this, wash and dry. In the first operation purpurate of lead is formed on the cloth, and in the second, or changing bath, the lead is wholly or partly removed, and oxide of mercury left in its place; the resulting lake is a colour of great brilliancy and purity, so much so that few of the ordinary colours will bear to be looked at along with it. Though perfectly fast as to soap, it appears that strong sunlight is rather injurious to its permanency.

A few outline illustrations of the various madder styles will render them more clear.

1 *a*. Black, 2 reds, purple and brown on white ground. Print by machine in colours 4, 5, 6, 9, 27, (No. 12 shade) and 18; age 3 nights; fly dung at 160° F., second dung at 150° F., wash and dye with French or Turkey madder, bringing to boil in 1¾ hours, and boiling ¼ hour; wash and soap twice at 180° F., wash; chloride of lime bath (see No. 1 plate purples), wash and dry.

1 *b*. Black, red, white and brown figures, covered in purple. Print in colours, 4, 11, 34, and 18; when dry, cover with a fine pattern in 27 (12 shade); age 3 nights; fly dung at 170° F., second dung at 160° F.; wash, dye, and clean as 1 *a*.

1 *c*. Print in colours 6, 7 (No. 3 shade), 34; dry and cover in 7, (6 shade) and blotch (or pad with a roller engraved with a pin, which has the effect of giving a uniform shade) in 7 (10 shade); age three nights, and treat as described under the head *Swiss Pinks*.

1 *d*. Some printers prefer to mordant for Swiss pinks with alkaline mordants, considering the composition of the colours to be a guarantee against their containing iron; in such case, they print in colours 31, 32, and 35, covering in paler shades of 32 after dyeing; fly dung with 3 cwts. cow-dung, 12 lbs. sal-ammoniac, 1000 gallons water at 110° F.; second dung with ¾ cwts. cow-dung at 110° 15 minutes; wash and dye as for 1 *c*. In this method of mordanting, the aluminate of soda that has escaped decomposition by the carbonic acid of the air is decomposed by the muriate of ammonia, and alumina precipitated on the cloth.

2 *a*. Black, chocolate, red, and brown on white ground. Print in colours 5, 13 (6 shade), 14, and 22; age 3 or 4 nights; fly-dung at 160° F., second dung at 160° F., and dye with chocolate garancin or garanceux (see p. 539).

2 *b*. Black, chocolate, red, and purple. Print as 2 *b*, but dye with purple garancin (see p. 539).

3 *a*. For chintz work treat as 1 *a*, then in the parts of the pattern meant for ground-

Digitized by Google

ing-in, block the colours 118 yellow, 119 green, and 129. If the pattern is such as to admit of it, all these colours may be printed at once from one block, using the toby-ing sieve, p. 500: the colours, however, for this method must be thickened with gum; steam, &c., as described for steam colours.

3 *b*. Black, 2 reds, blue, green, and yellow covered in drab, or other shades. Print in 4, 6, and 7; dye, &c., as 1 *a*; block-in colour 38 with a block which covers all the pattern, and also those portions which are intended for the steam colours: when this paste is dry, cover by machine in any of colours 40 to 47, age 2 or 3 nights; fly-dung at 160° F, second dung at 150° F., and dye with bark, or bark and logwood or cover in colour 48, and dye madder and bark as No. 6 (p. 527) for chocolate; or cover in colour 49 or 51, and after drying and ageing, wincing in chalky water; or in any of colours 55, 56, or 57, rinsing in carbonate of soda liquor at 5° T. when dry. After obtaining the ground shade by any of these processes and drying, ground-in by block colours 118, 119, and 135, steam, wash, and dry.

3 *c*. For furniture hangings, which are generally printed in large groups of flowers, a very pretty pea-green ground is often blocked-in as groundwork, which is made and fixed as follows:—

171. *Pea Green*—(*a*) Standard: 6 lbs. sulphate of copper, 1 gallon water, 4 lbs. brown acetate of lead; dissolve, let settle, and use the clear.—(*b*) Colour: 2 measures of standard, 1 measure of 7 lb. gum-Senegal solution.

After printing, age 2 nights, and pass through a cistern with rollers, set with caustic potash liquor at 15° T., which has 8 oz. per gallon of arsenious acid dissolved in it. The liquor should be heated to 110° F.; out of this wash and dry.

Instead of blocking-in steam blue and green, fast blue and green are introduced where the colours are required to be particularly permanent; colours 62 or 63 or both are blocked-in and raised as follows. 5 stone cisterns, each mounted with a hand reel, and containing about 200 gallons each, are set with carbonate-of-soda liquor, No. 1 at 7° T., No. 2 at 6° T., No. 3 at 5° T., No. 4 at 4° T., and No. 5 at 3° T.; wince 10 times backwards and forwards in each pit, beginning with No. 1, and ending with No. 5; wince in water and wash. The change that takes place here is similar to that in raising China blues. The indigo is maintained in a deoxidised state by the protoxide of tin formed, until it has fixed itself in the cloth by reoxidation in the air. Where fast green has been printed, the pieces are winced in bichromate-of-potash liquor at 4° T. for 10 minutes, then washed and dried.

3 *e*. Black and purple and white with buff ground. Print in 4 and 27 (12 shade), age, dung, and dye, &c., as directed for plate purples (p. 528); block over the pattern and portions of the unprinted part the paste No. 39; block with pad roller in No. 53 (6 shade), dry and raise as follows:—Wince 14 minutes in caustic soda at 2° T. at 110° F., then wince in water till quite buff, then wince in 400 gallons water with 1 quart chloride of lime at 12° T. 10 minutes; wash and dry.

Silk Printing.

Silk, in its capacity for receiving colours, holds a medium place between cotton and wool. From its being an animal substance, it is difficult to obtain white grounds or objects after dyeing mordanted silk, the silk itself attracting colouring matter somewhat as a mordant. Previously to printing silk, it is well scoured by boiling for 2 hours with ¼ lb. of soap to every pound of silk, then well washed and dried. For handkerchiefs, black, chocolate, and red mordants are printed, aged, and dunged off same as for cottons, and dyed with madder or garancin, soaped, washed, and dried. Purples cannot be obtained on silk by mordanting and dyeing madder, the colour produced being a mixture of red and purple. All sorts of colours can be produced on silk by steam, the whites remaining brilliant. For steam colours, silk is mordanted with tin, by steeping 4 hours in a solution of sulphomuriate of tin at 2 T., made by dissolving 1 lb. of muriate of tin crystals in water, and adding 1 lb. of sulphuric acid at 170° T., and reducing to 2° T. After steeping, the silk is washed with water, and dried. The following are specimens of steam colours for silk:—

Black.—2 gallons logwood liquor at 8° T., 1 quart iron liquor at 10° T., 1 lb. flour, 1 lb. light British gum; boil, and add 6 oz. yellow prussiate of potash; cool, and add 2 oz. sulphate of copper, 1 pint muriate of iron at 80° T., ½ pint pernitrate of iron at 80° T.

Chocolate.—2 gallons of sapan liquor at 12° T., 5 quarts logwood liquor at 12° T., 1 quart bark liquor at 16° T., 2 lbs. alum, 1½ lb. sal ammoniac, 14 lbs. gum Senegal.

Red.—3 gallons of cochineal liquor at 4° T., 1½ pint bark liquor at 12° T., 3 lbs. starch; boil, then cool, and add 1 lb. oxalic acid, 1 lb. muriate of tin crystals.

Yellow.—3 gallons of bark liquor at 16° T., 8 oz. alum, 3 oz. muriate of tin crystals, 3 oz. oxalic acid, 9 lbs. gum Senegal.

Digitized by Google

Green.—1 gallon yellow, ½ pint extract of indigo, 2½ oz. measure of muriate of tin at 120° T.

Blue.—1 gallon water, 1 lb. yellow prussiate of potash, ¼ lb. oxalic acid, ½ lb. tartaric acid, 2 oz. sulphuric acid at 170° T., 1 gallon 6 lbs. gum Senegal water.

Printing with Aniline Colours.—There does not appear to have been any improvements of interest in the adaptation of machinery to any of the processes of calico-printing since this article was written, in 1859. The introduction of the very beautiful colours derived from aniline has led to a simplification of the processes where any of these colours are employed.

It has already been explained, that when madder colours are employed, the mordant only—such as acetate of alumina, or the acetate of iron—is printed on the cloth, which is afterwards dyed with madder. The aniline colours are printed directly into the cloth, which is then simply steamed to fix them.

It would appear that occasionally attempts were made, during the early days of printing, to produce work possessing a high degree of artistic excellence; and as the specimens that have been preserved to our time are very rare, it is fair to conclude that these experiments were not successful in a pecuniary point of view. In the museum of the Peel Park, at Salford, there is a curious and interesting piece of printed linen, bearing the date 1761 (at this period cloth of all cotton was prohibited), and which must have been printed from copper plates of very unusual size. Apparently, the pattern has been produced by two plates, each about 4 feet 6 inches by 3 feet. The design is printed in madder red, and is thus described by Mr. Plant, the curator of the museum. "The printed piece of linen measures, in the full length of the design, 6 feet 10 inches by 3 feet 2 inches in breadth. The composition in the design is very bold and free—in my opinion indicating very strongly the feelings of an artist who had been educated in the Flemish school. The grouping of the trees, figures, cattle, and fowls, is probably a direct copy from an engraving or sketch by Berghem, whose paintings and engravings of such subjects are well known for their truth to nature. His works bear date 1638 to 1680. Perhaps, to fill up the design, and form a picturesque composition, the artist has borrowed from the French painters the classic ruins which form the sides of the design; it has had the effect of producing an anachronism. The upper group represents a peasant seated upon the wall of a well blowing a flute; near him stands a woman with a distaff; a group of sheep, cow, and a dog, in the foreground. The background shows a landscape, and on each side this group, are ruins, columns, and trees, reflected in the stream below. On a broken bank, midway between the two groups, are two dogs chasing a stag. The lower group, although there is no defined line of separation between the groups, represents a peacock, fowls, and chickens, upon a bank and ruins; landscape and river scenery beyond. Over, a hawk carrying a chicken, the sides occupied with a ruined portico, tomb, and pedestal and vase, trees, and broken ground; and below are ducks swimming, and water-plants on the bank. At the bottom of the piece are those parts of the pattern which would print or fit on the top part of the design. On the stone-work of the well, in the upper group, is printed, 'R. JONES, 1761;' on the broken stone-work, in the centre of the lower group, is printed, 'R. I. and Co., OLD FORD, 1761.'" Old Ford is situated at Bow, where the East London Water Works now are, and where there was a print works at the time specified. This design was no doubt printed for furniture hangings or tapestry, for which it is exceedingly well adapted, and the work being altogether a remarkable production for the period.

The immense increase of production in lower goods has not decreased the taste in the higher in this country, though it may have caused it to make less apparent progress than when the larger part of the supply was of fine goods. We find specimens of good taste on the lowest material, printed at the lowest possible price for export, showing a taste superior to that in use for our best work twenty years ago, employing greater talent in design, greater skill in engraving—the cost of production cheap, because repaid by the quantity produced. This diffusion of art and of a better taste cannot be otherwise than beneficial, even the higher class of productions, as preparing a taste and demand for them in countries where high price would never have given prints any admission. The improvements of the lower cannot militate against that of the higher, either in the moral, intellectual, or artistic world. The productions of the highest class of French goods of to-day, whether furniture or dresses, are superior in taste and execution to those of any former period. The productions of the first-class printers of Great Britain maintain an equal advance, and are superior in taste and execution, in every respect to those of former years.

Calico, &c., printing has, since the repeal of the duty, risen steadily in importance, till it is now one of the most influential manufactures of Great Britain. From a table compiled by the late Mr. Binyon, and communicated by Mr. John Graham, there were in 1840 the following number of machines, &c. in use:—

Digitized by Google

List of Machines, Tables, &c., employed by the trade in England and America in 1840.

	Cylinder and Surface Machines.	Flat Presses.	Discharging Presses.	Tables.
Lancashire - - -	435	2	- -	8275
Scotland - - - -	75	82	124	4997
Ireland - - - -	18	1	- -	300
America - - - -	109	- -	- -	884

Since that period there are no data as to the number of printers in Great Britain; but Mr. John Graham, in an unpublished "History of the Lancashire Printers," gives a table, which he was at considerable care to compile from perfectly trustworthy sources, showing that in the Lancashire district, which includes also the contiguous counties, there were, in 1846, 128 firms, employing—

549 cylinder machines.
33 perrotines.
7187 block tables.

The producing power of the Lancashire district having thus been doubled in 6 years.

Several printing firms, both in England and Scotland, have since that period much enlarged their powers of production. There are many who manufacture 10,000 pieces of printed cloth per week; and there are four concerns, of great magnitude, whose united production at the present time probably does not fall short of four millions of pieces per annum, or nearly ¼th of the total quantity printed.

The following estimate of the exports of printed goods is from Mr. Potter's Lecture before the Society of Arts, as reporter for printed fabrics exhibited in the Exhibition of 1851 —

"In reference to the exports of printed goods, our information is rather obscure, owing to their being classed with dyed goods of all kinds." "After considerable thought and calculation, I have ventured to estimate them for 1851 at 15,544,000 pieces, or rather more than three-fourths of our entire production. These goods are, however, many of them of the cheap and more staple class of prints, or slight goods suited to warm climates, and for markets where cheapness is the great recommendation. In value, I should be disposed to estimate our export of printed goods at 5,775,000*l.*

"In reference to the entire export of manufactured cotton goods (exclusive of yarns), it may be assumed that out of 23,447,103*l.*, given as the export of 1851, about one-fourth may be placed to the account of the print trade. I have endeavoured to estimate, from the Table of Exports for 1851, the probable quantity of *low priced* prints we export, and should be disposed to class them as follows:—

	Pieces.
"Coast of Africa and the Cape - - - -	300,000
New Zealand and South Sea Islands - - -	36,000
China, Manilla, and Singapore - - - -	550,000
British West Indies - - - - - -	300,000
Foreign West Indies - - - - - -	300,000
St. Thomas - - - - - - - -	200,000
India - - - - - - - - -	1,570,000
Mauritius and Batavia - - - - -	325,000
Chili and Peru - - - - - - -	800,000
Brazil and East Coast of South America - -	1,000,000
Egypt - - - - - - - -	84,000
Turkey, Ionian Isles, Greece, and Malta - -	1,000,000
Total - - -	6,465,000

"I find those countries which take our lowest description of goods, and where the duties are chiefly very light—our colonies, India, and China—receive from us about 6½ millions of pieces, or about 40 per cent. of our exports in printed goods. A great proportion of the finer part of our exports, perhaps three-fourths, are very seriously taxed, either for protection, as in the United States, the Zollverein, and Belgium, or for revenue, as in Brazil and the other South American markets. A part, however, of these better goods find their way into consumption in Canada, Turkey, the Ionian Isles, Egypt, &c., subject to very moderate duties."

"The home-consumption I estimate at 4,500,000; the excise returns for 1830, gave it as 2,281,512 pieces. The repeal of the duty, and the decrease in the cost of production, giving the consumer goods in much better taste and value at one-half the price, have greatly tended to this increase."

Digitized by Google

In 1864 our exports of printed cottons were :—

Heavy Cottons, Printed.

	Yards.	Value.		Yards.	Value.
To Russia	719,298	£27,033	To Hayti	4,309,857	£133,219
Sweden	407,033	13,899	United States:		
Norway	1,035,162	34,296	North Atlantic Ports	15,434,773	379,762
Denmark	611,200	19,121	Pacific Ports	3,744,011	99,241
Hamburg	11,278,572	248,688	Mexico	18,402,794	495,185
Holland	8,032,686	241,710	Central America	2,305,330	50,896
Belgium	802,716	22,034	New Granada	21,599,258	507,374
France	8,467,259	217,750	Venezuela	4,740,627	122,945
Portugal, Azores, and Madeira	8,197,959	220,150	Peru	11,370,957	262,434
Spain and the Canaries	1,985,287	68,986	Chili	10,349,800	245,774
Italy: Sardinian States	5,175,373	137,477	Brazil	65,958,857	1,807,284
Tuscany	4,800,747	125,655	Uruguay	8,880,485	232,795
Naples and Sicily	10,123,261	288,431	Argentine Confederation	10,870,289	271,670
Ancona and the Romagna	2,026,233	53,784	Gibraltar	3,808,899	100,333
Austrian territories	3,270,309	81,676	Malta	2,070,059	52,942
Greece	2,532,100	69,436	W. Africa (British)	3,307,074	81,168
Ionian Islands	3,903,780	92,229	British Possessions in South Africa	4,339,559	137,525
Turkey Proper	64,138,813	1,827,595	Mauritius	2,783,190	68,011
Wallachia and Moldavia	596,530	14,362	British India: Bombay and Scinde	19,317,749	469,654
Syria and Palestine	11,845,011	309,596	Madras	6,421,328	186,394
Egypt	10,659,318	268,335	Bengal and Pegu	25,575,623	610,700
Morocco	324,766	10,364	Singapore and Eastern Straits	3,405,268	103,795
W. Africa (Foreign)	6,592,150	150,057	Ceylon	4,458,392	150,214
Java	7,553,350	208,809	Hong Kong	3,464,596	97,458
Philippine Islands	8,403,196	239,420	Australia	5,861,233	181,463
China (exclusive of Hong Kong)	8,548,767	268,603	British N. America	11,273,730	306,629
Japan	2,612,171	78,905	British West Indies and British Guiana	17,157,575	384,959
Sandwich Islands	2,646,693	73,766	British Honduras	2,775,680	47,461
Cuba	18,849,957	438,398	Other countries	451,330	13,600
Porto Rico	3,068,854	60,845			
Curaçoa	1,533,769	36,579			
St. Thomas	9,581,880	222,022	Total	524,765,220	13,777,890

Light Cottons, Printed.

	Yards.	Value.		Yards.	Value.
To Russia	188,578	£7,123	To Peru	1,203,585	£30,010
Hamburg	1,313,791	34 316	Chili	1,122,753	25,976
Bremen	855,906	26,789	Brazil	6,715,432	187,506
Holland	2,592,804	80,493	Uruguay	661,886	15,862
Belgium	770,621	28,760	Argentine Confederation	1,308,296	34,298
France	293,096	9,383	Gibraltar	838,335	21,773
Portugal, Azores, and Madeira	1,672,239	45,291	W. Africa (British)	65,273	1,906
Italy: Naples and Sicily	364,691	9,469	British Possessions in South Africa	1,239,357	40,846
Austrian territories	120,834	3,031	Mauritius	428,726	10,653
Turkey Proper	964,272	25,012	British India:		
Syria and Palestine	4,547,519	58,530	Bombay and Scinde	17,425,010	507,363
Egypt	447,856	9,767	Madras	725,488	21,542
W. Africa (Foreign)	963,094	21,334	Bengal and Pegu	13,054,201	341,893
Java	4,412,839	120,577	Singapore and Eastern Straits	1,139,149	34,512
Philippine Islands	3,307,503	98,075	Ceylon	527,839	15,190
China (exclusive of Hong Kong)	352,904	10,768	Hong Kong	153,604	4,750
Cuba	4,816,730	93,756	Australia	1,012,328	32,339
St. Thomas	655,656	13,780	British N. America	4,573,490	81,473
Hayti	389,086	8,240	British West India Islands and British Guiana	2,784,823	68,089
United States: North Atlantic Ports	7,993,309	209,761	British Honduras	525,4 0	11.805
Pacific Ports	1,735,940	50,206	Other countries	1.652,986	40,662
Mexico	1,067,705	28,847			
New Granada	5,476,903	121,961			
Venezuela	790,436	18,047	Total	102,952,343	2,661,362

	Yards.	Value.
Heavy cottons, printed	524,765,220	£13,777,890
Light cottons, printed	102,952,343	2,661,362
Handkerchiefs and shawls, printed and dyed	20,750,209	568,259
Total export of printed cottons	648,567,742	17,007,511

Digitized by Google

CALK. To drive oakum, or untwisted old tarred rope into the seams of any vessel to prevent water from entering it or to stop a leak. After calking a ship, hot tar is applied to protect the oakum driven in.

CALIPERS. CALIPER COMPASSES. Compasses with bowed legs, employed to measure the size of any round or conical body. In use, the two points are opened to the required width, and so much wood, metal or stone is turned off the piece of work, that the two points exactly fit it.

CALLOW. The top or rubble bed of a quarry. This is obliged to be removed before the useful material is raised; it is the great source of expense in working a quarry. (*Brande*). Frequently termed the "overburthen."

CALOMEL. (*Chlorure de Mercure*, Fr.; *Versüsstes Quecksilber*, Germ.) The mild sub-chloride of mercury (Hg^2Cl). Hemichloride of mercury or mercurous chloride of modern chemists. Calomel is found native in the Palatinate, coating the cavities of a ferruginous gangue, associated with cinnabar; crystals often well-defined; also at the quicksilver mines of Toria in Carniola, at Almaden in Spain, and Horzowitz in Bohemia. (*Dana*). The manufacture of this substance upon the large scale may be performed in various ways. The cheapest, and most direct consists in mixing $1\frac{1}{2}$ parts of pure quicksilver with 1 part of pure nitric acid, of specific gravity from 1·2 to 1·25; and in digesting the mixture till no more metal can be dissolved, or till the liquid has assumed a yellow colour. At the same time, a solution is made of 1 part of common salt in 32 parts of distilled water, to which a little muriatic acid is added; and when heated to nearly the boiling point, it is mixed with the mercurial solution. The two salts exchange bases, and a subchloride of mercury precipitates in a white powder; which, after being digested for some time in the acidulous supernatant liquor, is to be washed, with the greatest care, in boiling water. The circumstances which may injure the process are the following:—1. When less mercury is employed than the acid can dissolve, there is formed a nitrate of mercury which gives rise to some corrosive sublimate and causes a proportional defalcation of calomel. 2. If the liquors are perfectly neutral at the moment of mixing them, some subnitrate of mercury is thrown down, which cannot be removed by washing, and which gives a noxious contamination to the bland calomel. The acid prescribed in the above formula obviates this danger.

The following are the directions given by the London College for the preparation of this salt:—2 lbs. of mercury are boiled to dryness in a suitable vessel with 3 lbs. of concentrated sulphuric acid: the sulphate of mercury thus obtained is rubbed when cold, first with 2 lbs. more mercury in an earthen vessel until perfectly mixed, and then thoroughly incorporated with $1\frac{1}{2}$ lbs. of chloride of sodium; the whole is then sublimed in an appropriate vessel; the sublimate is rubbed to a fine powder, and then washed with boiling distilled water, until the washings are no longer tinged by sulphuretted hydrogen. This process is absolutely necessary in order to remove every trace of corrosive sublimate which is always formed in greater or less quantity.

At Apothecaries' Hall 50 lbs. of mercury are boiled with 70 lbs. of sulphuric acid to dryness in a cast iron vessel; 62 lbs. of the dry salt are triturated with $40\frac{1}{2}$ lbs. of mercury until the globules disappear; and 34 lbs. of common salt are then added. The mixture is submitted to heat, and from 95 lbs. to 100 lbs. of sublimed calomel are obtained. It is washed in large quantities of distilled water, after having been ground to a fine and impalpable powder.

According to the patent of Mr. Josiah Jewell, the vapour of calomel was to be transmitted into a vessel containing water, in order to condense it at once into an impalpable powder. But this process was beset with many difficulties. The vapour of the calomel was afterwards introduced into a large receiver, into which steam was simultaneously admitted; but this plan has also been found to be precarious in the execution. The best way is to sublime the calomel into a very large chamber from an iron pot, in the same way as the flowers of sulphur are formed. The great body of cool air serves to cause the precipitation of the calomel in a finely comminuted state. It is afterwards washed with water, till this is no longer coloured by sulphuretted hydrogen.

A patent was obtained in September 1841, by Anthony Todd Thomson, M.D. for an improved method of manufacturing calomel and corrosive sublimate, as follows:—This invention consists in combining chlorine in the state of gas with the vapour of mercury or quicksilver, in order to produce calomel and corrosive sublimate. The apparatus employed consists of a glass, earthenware, or other suitable vessel, mounted in brickwork, and communicating at one end with a large air-tight chamber, and at the other end by means of a bent tube, with an alembic, such as is generally used in generating chlorine gas. The alembic is charged with a mixture of common

Digitized by Google

salt, binoxide of manganese, and sulphuric acid, or of binoxide of manganese and muriatic acid in order to produce chlorine gas.

The mode of operating with this apparatus is as follows:—A quantity of mercury or quicksilver is placed in a glass vessel, and the temperature of the same is raised to between 350° and 660° Fahr., by means of an open fire beneath. The chlorine gas, as it is generated, passes from the alembic through the bent tube into the glass vessel, and there combining with the vapour of the mercury, forms either corrosive sublimate or calomel, according to the quantity of chlorine gas employed.

The product is found at the bottom of the air-tight chamber, and may be removed from the same through a door, when the operation is finished.

Prof. Wöhler proposes to prepare calomel in the humid way by decomposing a solution of corrosive sublimate by sulphurous acid. The commercial salt is dissolved in water at 122° to saturation. Sulphurous acid gas, evolved by heating coarse charcoal powder with concentrated sulphuric acid, is passed into the hot solution: the separation of the calomel commences immediately. When the solution is saturated with the gas, it is digested for some time, then left to get cold, and filtered from the calomel, which is afterwards washed. The filtrate usually contains some unchangeable corrosive sublimate, which may be converted into calomel, either by heating to boiling, or by a fresh introduction of sulphurous acid and heating. Calomel obtained in this manner is a crystalline powder of dazzling whiteness, glittering in the sunlight.

The presence of corrosive sublimate in calomel is easily detected by digesting alcohol upon it, and testing the decanted alcohol with a drop of caustic potash, when the characteristic brick-coloured precipitate will fall, if any of that salt be present. To detect subnitrate of mercury in calomel, digest dilute nitric acid on it, and test the acid with potash, when a precipitate will fall in case of that contamination.

117·75 parts of calomel contain 100 of quicksilver. H. M. N.

CALUMBA. See COLOMBA.

CALORIC. A term once extensively used in physical science, and perhaps somewhat too hastily abandoned. When employed there was a very general impression that *heat* was the *effect* of some undeveloped *cause*, and to this cause the term caloric was applied. The modern hypothesis regarding heat as a mode of motion, the term has been dispensed with. See HEAT.

CALORIFÈRE OF WATER. (*Calorifère d'eau*, Fr.; *Wasser-Heitzung*, Germ.) In the *Dictionnaire Technologique*, vol. iv., we find a description of this apparatus, of late years so much employed in Great Britain for heating conservatories, &c., by hot water circulating in pipes:—

This mode of heating is analogous to that by stove pipes: it is effected by the circulation of water, which, like air, is a bad conductor, but may serve as a carrier of caloric by its mobility. We may readily form an idea of the apparatus which has been employed for that purpose. We adapt to the upper part of either a close kettle, or of an ordinary cylindric boiler A, *fig.* 396, a tube B, which rises to a certain height, and descends, making several sinuosities with a gentle slope till it reaches the level of the bottom of the boiler, to whose lowest part, as that which is least heated, it is fitted at C. At the highest point of the tube F we adapt a vertical pipe, destined to serve as an outlet to the steam which may be formed if the temperature be too much raised; it serves also for the escape of the air expelled from the water by the heat; and it permits the boiler to be replenished from time to time as the water is dissipated by evaporation; lastly, it is a tube of safety.

396

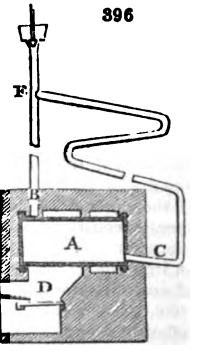

The apparatus being thus arranged, and all the tubes as well as the boiler filled with water, if we kindle fire in the grate D, the first portions of water heated, having become specifically lighter, will tend to rise: they will actually mount into the upper part of the boiler, and, of course, enter the tube B F: at the same time an equivalent quantity of water will re-enter the boiler by the other extremity C of the tube. We perceive that these simultaneous movements will determine a circulation in the whole mass of the liquid, which will continue as long as heat is generated in the fire-place; and if we suppose that the tubes, throughout their different windings, are applied against the walls of a chamber, or a stove room, the air will get warmed by contact with the hot surfaces; and we may accelerate the warming by multiplying these contacts in the mode indicated.

This *calorifère* can be employed with equal advantage and with more safety than

Digitized by Google

those with heated air, when it is wished to heat large apartments. In the present case, the temperature of the water, without pressure, in the tubes, must be always under 100° C. (212° F.), even in those points where it is most heated, and less still in all the other points, while the temperature of the flues in *air stoves*, heated directly by the products of combustion, may be greatly higher. In air stoves, however, the pipes may without inconvenience have a large diameter, and present, consequently, a large heating surface; whereas, with the water *calorifère*, the pressure exercised by liquid upon the sides of the tubes being in the ratio of the surfaces, we are obliged, in order to avoid too great pressure, to employ a multitude of small tubes, which is expensive. Lastly, if the hot-water circulation is to be carried high, as may be often necessary in lofty buildings, the pressure resulting from the great elevation would call for proportional thickness in the tubes and the boiler: for these reasons, it appears that water cannot in all cases be advantageously substituted for air or steam in the applications above stated: yet this mode of heating presents very decided advantages where it is needed to raise the temperature a small number of degrees in a uniform manner.

M. Bonnemain applied, with much success, these ingenious processes of heating by the circulation of water to maintain a very equal temperature in hot-houses (*serres-chaudes*), in stoves adapted to artificial incubation, and in preserving or quickening vegetation within hot-houses, or outside of their walls, during seasons unpropitious to horticulture.

Since the capacity of water for heat is very great, if the mass of it in a circulation-apparatus be very considerable, and the circulation be accelerated by proper arrangements, as by cooling the descending-tube exterior to the stove-room, we may easily obtain by such means a moderately high and uniform temperature, provided the heat generated in the fire-place be tolerably regular. We may easily secure this essential point by the aid of the *fire-regulator*, an instrument invented by M. Bonnemain.

It should be clearly understood that wood will become charred and eventually take fire if kept in contact with iron pipes through which hot water circulates. This may appear contrary to ordinary experience. There are, however, numerous evidences which prove distinctly that it is dangerous to have wood in contact with even hot water pipes, and that it is infinitely more so to have it near to pipes through which the circulation of heated air is carried on.

CALORIMETER. An instrument intended to measure the quantity of heat produced by burning bodies, devised by Lavoisier and Laplace. The principle upon which these instruments depended may be easily understood. To convert a certain quantity of ice into water, a given amount of heat is necessary. Now suppose we construct a funnel-shaped vessel, and having placed in the middle of it a vessel containing boiling water, or hot mercury, or oil, or a red-hot piece of metal, it is packed round with ice, care being taken that no heat shall escape, except it is employed to thaw the ice. The water formed by the ice is collected in a vessel placed below the funnel, and the quantity collected during the cooling of the heated body will represent the heat given out and employed in liquefying the ice. For nice experiments certain exact determinations are required, for which, and the general rules to be observed, some good treatise on Physics should be consulted.

CALOTYPE (signifying *beautiful picture*). A name given by Mr. Henry Fox Talbot to a photographic process invented by him in 1840, and patented in 1841.

Mr. Talbot's description of his process, is as follows:—

Take a sheet of the best writing-paper, having a smooth surface, and a close and even texture. The water-mark, if any, should be cut off, lest it injure the appearance of the picture. Dissolve 100 grains of crystallised nitrate of silver in six ounces of distilled water. Wash the paper with this solution with a soft brush on one side, and put a mark on that side, whereby to know it again. Dry the paper cautiously at a distance from the fire, or else let it dry spontaneously in a dark room. When dry, or nearly so, dip it into a solution of iodide of potassium, containing 500 grains of that salt dissolved in one pint of water, and let it stay two or three minutes in the solution. Then dip the paper into a vessel of water, dry it lightly with blotting-paper, and finish drying it at a fire, which will not injure it even if held pretty near: or else it may be left to dry spontaneously. All this is best done in the evening by candle-light: the paper, so far prepared, is called *iodised paper*, because it has a uniform pale-yellow coating of iodide of silver. It is scarcely sensitive to light, but nevertheless it ought to be kept in a portfolio or drawer until wanted for use. It may be kept for any length of time without spoiling or undergoing any change, if protected from sunshine. When the paper is required for use, take a sheet of it, and wash it with a liquid prepared in the following manner:—

Dissolve 100 grains of crystallised nitrate of silver in two ounces of distilled water; add to this solution one-sixth of its volume of strong acetic acid. Let this be called mixture A.

Digitized by Google

Make a saturated solution of crystallised gallic acid in cold distilled water. The quantity dissolved is very small. Call this solution B.

Mix together the liquids A and B in equal volumes, but only a small quantity of them at a time, because the mixture does not keep long without spoiling. This mixture Mr. Talbot calls the *gallo nitrate of silver*. This solution must be washed over the iodised paper on the side marked, and being allowed to remain upon it for half a minute, it must be dipped into water, and then lightly dried with blotting-paper. This operation in particular requires the total exclusion of daylight; and although the paper thus prepared has been found to keep for two or three months, it is advisable to use it within a few hours, as it is often rendered useless by spontaneous change in the dark.

Paper thus prepared is exquisitely sensitive to light; an exposure of less than a second to diffused daylight being quite sufficient to set up the process of change. If a piece of this paper is partly covered, and the other portion exposed to daylight for the *briefest possible period of time*, a very decided impression will be made. This impression is latent and invisible. If, however, the paper be placed aside in the dark, it will gradually *develop itself*; or it may be brought out immediately by being washed over with the gallo-nitrate of silver, and held at a short distance from the fire, by which the exposed portions become brown, the covered parts remaining of their original colour. The pictures being thus procured, are to be fixed by washing in clean water, and lightly drying between blotting paper, after which they are to be washed over with a solution of bromide of potassium, containing 100 grains of that salt, dissolved in eight or ten ounces of water; after a minute or two, it is again to be dipped into water, and then finally dried.

Many modifications of the calotype were introduced; for a description of these, see Hunt's Manual of Photography. The Collodion process has almost entirely surpassed the Calotype. See COLLODION and PHOTOGRAPHY.

CAMBAY STONE. A variety of cornelian imported from the East Indies.

CAMBOGIA. See GAMBOGE.

CAMBRIC. (*Batiste*, Fr.; *Kammertuch*, Germ.) A sort of very fine and rather thin linen fabric, first made at Cambray. An excellent imitation of it is made in Lancashire and in Scotland, woven from fine cotton yarn, hard twisted. Linen cambric of a good quality is also now manufactured in the United Kingdom from power-spun flax; this is frequently called *Cambric muslin*.

CAMES. Slips of lead employed by glaziers in glazing church or cottage windows in the olden style. They were formerly called 'lattices' and hence leaded windows were termed lattice windows.

CAMELEON MINERAL. See CHAMŒLEON MINERAL.

CAMEO. (*Camée*, Fr.; *Cammeo*, It.) Correctly a precious stone engraved in relief, as opposed to an *intaglio*, which is cut into the stone. The earliest cameos appear to have been cut upon the onyx, and subsequently, on the agate. The true cameo is formed upon a stone having two or more layers, differing in colour; and the art of the cameo engraver consists in so cutting as to apropriate those differently coloured layers to distinct parts or elevations of the work.

Many of the varieties of calcedony present in section transparent and opaque layers; and beautiful works have been cut upon such specimens of this material. The calcedony and agate are, however, not unfrequently coloured artificially. The layers vary very much in their structure, some being absorbent and others not so. Such stones are taken, and if it is desired to have black and white layers, they are boiled in a solution of sugar or honey, and then in sulphuric acid. The sugar or honey is, in the first place, absorbed by the more porous layers, and then decomposed by the acid. Red or brownish-red layers are produced, by occasioning the stone to absorb a solution of sulphate of iron, and then by exposure to heat effecting the oxidation of the metal. This being done, layers very strongly contrasted in colour are the result; and very fine cameos have been cut upon stones so prepared. In Italy and in France, the art of producing the *cammeo duro* has been to some extent revived; but the immense labour which such hard materials require renders them so expensive, that these cameos have not come into general use.

The shells of several molluscous animals are now commonly used. Many of these shells afford the necessary variety of colour, are soft enough to be worked with facility, yet hard enough to wear for a considerable time without injury.

The natural history of the mollusca producing the shells, and the best account of the manufacture of cameos, was given by J. E. Gray, *of the British Museum*, in a paper read before the Society of Arts in 1847, to which, and to his paper in the *Phil. Trans.*, we are indebted for much of the information contained in this article.

It was the custom in Holland to use the pearly nautilus as a cameo shell, and several kinds of turbines or wreath shells, which have an opaque white external coat over an internal pearly one. These are now rarely employed. The shells now used are

Digitized by Google

those of the flesh-eating univalve (*Gasteropoda ptenobranchiata zoophaga*), which are peculiar for being all formed of three layers of calcareous matter, each layer being composed of three perpendicular laminæ placed side by side; the laminæ comprising the central layer, being placed at right angles with one of the inner and outer ones; the inner and outer being placed longitudinally with regard to the axis of the line of the shells, while the inner laminæ are placed across the axis, and concentrically with the edge of the mouth of the cone of the shell. (Gray, *Phil. Trans.*).

This structure furnishes the cameo cutter with the means of giving a particular surface to his work, a good workman always putting his work on the shell in such a manner, that the direction of the laminæ of the central coat is longitudinal to the axis of his figure. The central layer forms the body of the bas-relief, the inner laminæ being the ground, and the outer one, the third or superficial colour, which is sometimes used to give a varied appearance to the surface of the figure. The cameo cutter, therefore, selects for his purpose those shells which have three layers of different colours, as these afford him the means of relieving his work; and secondly, those which have the three layers strongly adherent together, for if they separated, his labour would be lost.

The following are the kinds of shells now employed: 1. The bull's mouth (*Cassis rufum*), which has a red inner coat, or what is called a sardonyx ground. 2. The black helmet (*Cassis Madagascariensis*), which has a blackish inner coat, or what is called an *onyx* ground. 3. The horned helmet (*Cassis cornutum*), with a yellow ground. 4. The queen's conch (*Strombus gigas*), with a pink ground.

The bull's mouth and the black helmet are the best shells. The horned helmet is apt to separate from the ground, or *double*, and, the last, the queen's conch, has but seldom the two colours marked with sufficient distinctness, and the finish of the ground colour flies on exposure to light.

The red colour of the bull's mouth extends only a slight distance into the mouth of the shell, becoming paler as it proceeds backwards. The dark colour extends further in the black and yellow varieties. Hence the bull's mouth only affords a single cameo large enough to make brooches of, and several small pieces for shirt-studs. The black helmet yields on an average about five brooches, and several pieces for studs, while the queen's conch affords only one good piece.

Forty years since, very few cameos were made from any shells but the black helmet, and the number of shells then used amounted to about 300 annually, nearly all of which were sent from England, being all that were then imported. The black helmet is imported into England from Jamaica, Nassau, and New Providence. They are not found in Madagascar, though naturalists have for a long period called them *Madagascar* helmets. (*Gray.*)

Of the bull's mouth, half are received direct from the Island of Bourbon, to which place they are brought from Madagascar, and the other half are obtained from the Island of Ceylon, being received by the way of Calcutta; hence they are often called "Calcutta shells."

So rapidly has the trade in those shells increased, that Dr. Gray informs us, that in Paris 100,500 shells are used for cameos annually. These are divided as follows:

		Price	Value			Price	Value
Bull's mouth -	80,000	1*s.* 8*d.*	£6,400	Horned helmet	500	2*s.* 6*d.*	£60
Black helmet	8,000	5 0	1,920	Queen's conch	12,000	1 2½	725

The manufacture of shell cameos was for some time confined to Italy; about twenty years since, an Italian commenced making them in Paris, and now the trade belongs to the French capital, where not less than 300 persons are engaged in the manufacture. Nearly all the cameos made in France were sent to England, and in Birmingham mounted as brooches, and exported to America and the British colonies.

In 1856, we *imported*, of shell cameos not set, to the value of 6,683*l.* In 1864 to the value of 3,261*l.* only.

CAMERA LUCIDA. An instrument invented by Dr. Wollaston, for the purpose of enabling any one, without a knowledge of the rules of drawing or perspective, to delineate any external objects with accuracy. It consists essentially of a quadrangular glass prism.

CAMERA OBSCURA, literally *dark chamber*. An instrument invented by Baptiste Porta. It is employed for the production of photographic pictures, and will be fully described in the article devoted to that art. See PHOTOGRAPHY.

CAMLET or CAMBLET. A light stuff, formerly much used for female apparel. It is made of long wool, hard spun, sometimes mixed in the loom with cotton or linen yarn. Several fabrics of the same kind are now introduced under other names.

CAMPEACHY WOOD (*Hæmatoxylon Campechianum*). Logwood brought from the bay of that name. See LOGWOOD.

CAMPHENE. The radicle of camphor; various hydrocarbons isomeric or polymeric with oil of turpentine are so called. See Watts' "Dictionary of Chemistry."

Digitized by Google

CAMPHINE. Rectified oil of turpentine is sold in the shops under this name for burning in lamps. Crude oil of turpentine is redistilled with potash, and then with water, and lastly, to secure its perfect purity, with chloride of calcium. The oil thus prepared forms a limpid colourless liquid; its specific gravity is about 0·870, but it is subject to some slight variations; C^5H^4 appears fairly to represent this and several other similar oils. It is very inflammable, burning with a bright white flame, and without a proper supply of air it evolves much dense smoke, hence peculiar lamps (*Camphine lamps*) are required. Where it has, from exposure to air, absorbed oxygen, and become *resinified*, it is unfit for purposes of illumination. Such *camphine* very rapidly clogs the wick with a dense carbon, and is liable to the thick black smoke, which is so objectionable in the camphine lamps if they are not properly attended to.

To purify old *camphine*, it must be redistilled from carbonate of potash, or some similarly active substance to deprive it of its resin. See LAMPS.

CAMPHOLE. One of the oils obtained from coal tar. Mansfield gave this name to the oils *cumole* and *cymole*, which boil at 284° and 338° Fahrenheit, when collected together. The specific gravity of crude camphole ranges from ·88 to ·98, and the less volatile portions frequently contain naphthaline, which raises their specific gravity. This substance, either alone or mixed with pyroxylic spirit, is applicable for burning in lamps or for dissolving resins, as a substitute for oil of turpentine.

CAMPHOR, or CAMPHIRE. (*Camphre*, Fr.; *Kampher*, Germ.) This immediate product of vegetation was known to the Arabs under the names of *kamphur* and *kaphur*, whence the name *camphora*. Camphor was not known to the ancients; it is first mentioned by Avicenna, and Serapion calls it *cáfúr*. Symeon Seth, who lived in the eleventh century, describes it. It is found in a great many plants, and is secreted, in purity, by several laurels; it occurs combined with the essential oils of many of the *labiacæ;* but it is extracted, for manufacturing purposes, only from the *Laurus camphora*, which abounds in China and Japan, as well as from a tree which grows in Sumatra and Borneo, called, in the country, *Kapour barros*, from the name of the place where it is most common. The camphor exists, ready formed, in these vegetables, between the wood and the bark; but it does not exude spontaneously. On cleaving the tree *Laurus Sumatrensis*, masses of pure camphor are found in the pith.

The wood of the laurus is cut into small pieces, and put with plenty of water into large iron boilers, which are covered with an earthen capital or dome, lined within with rice straw. As the water boils, the camphor rises with the steam, and attaches itself as a sublimate to the stalks, under the form of granulations of a grey colour. In this state it is picked off the straw, and packed up for exportation to Europe.

Formerly Venice held the monopoly of refining camphor, but now France, England, Holland, and Germany refine it for their own markets. All the purifying processes proceed on the principle that camphor is volatile at the temperature of 400° Fahr. The substance is mixed, as intimately as possible, with 2 per cent. of quicklime, and the mixture is introduced into a large bottle made of thin uniform glass, sunk in a sand bath. The fire is slowly raised till the whole vessel becomes heated, and then its upper part is gradually laid bare in proportion as the sublimation goes on. Much attention and experience are required to make this operation succeed. If the temperature be raised too slowly, the neck of the bottle might be filled with camphor before the heat had acquired the proper subliming pitch; and, if too quickly, the whole contents might be exploded. If the operation be carried on languidly, and the heat of the upper part of the bottle be somewhat under the melting point of camphor, that is to say, a little under 350° Fahr., the condensed camphor would be snowy, and not sufficiently compact and transparent to be saleable. Occasionally, sudden alterations of temperature cause little jets to be thrown up, out of the liquid camphor at the bottom, on the cake formed above, which soil it, and render its resublimation necessary.

If to the mixture of 100 parts of crude camphor and 2 of quicklime, 2 parts of bone-black, in fine powder, be added, the small quantity of colouring matter in the camphor will be retained at the bottom, and whiter cakes will be produced. A spiral slip of platina foil immersed in the liquid may tend to equalise its ebullition.

By exposing some volatile oils to spontaneous evaporation, at the heat of about 70° Fahr., Proust obtained a residuum of camphor; — from oil of lavender, 25 per cent. of its weight; from oil of sage, 12½; from oil of marjoram, 10 per cent.

Refined camphor is a white translucid solid, possessing a peculiar taste and smell. It may be obtained, from the slow cooling of its alcoholic solution, in octahedral crystals. It may be scratched by the nail, is very flexible, and can be reduced into powder readily by mixing it with a few drops of alcohol and giving a few blows to the camphor. Its specific gravity varies from 0·985 to 0·996. Mixed and distilled with six times its weight of clay, it is decomposed, and yields a golden yellow aromatic oil, which has a flavour analogous to that of a mixture of thyme and rosemary; along with

Digitized by Google

a small quantity of acidulous water tinged with that oil, charcoal remains in the retort. In the air, camphor takes fire on contact of an ignited body, and burns all away with a bright fuliginous flame.

Camphor is little soluble in water; one part being capable of communicating smell and taste to 1000 of the fluid this is the *Misturæ Camphoræ* of the apothecary. 100 parts of alcohol, spec. grav. 0·806, dissolve 120 parts of camphor, at ordinary temperatures. It is separated in a pulverulent state by water. Ether and oils, both expressed and volatile, also dissolve it.

When distilled with 8 parts of aquafortis, camphor is converted into camphoric acid. Camphor absorbs 144 times its volume of muriatic acid gas, and is transformed into a colourless transparent liquid, which becomes solid in the air, because the acid attracts humidity, which precipitates the camphor. One part of strong acetic acid dissolves 2 parts of camphor. By Dr. Ure's analysis, camphor consists of 77·38 carbon, 11·14 hydrogen, and 11·48 oxygen.

Dumas (1) and Blanchet and Sell (2) have given the following composition :—

	(1)	(2)
Carbon	78·02	77·96
Hydrogen	10·39	10·61
Oxygen	11·59	11·43

There are two kinds of camphor imported :—

JAPAN CAMPHOR, called DUTCH CAMPHOR because it is always brought by the Dutch to England. It comes by the way of Batavia, and is imported in tubs (hence it is called *tub camphor*), covered with matting, and each surrounded by a second tub, secured on the outside by hoops of twisted cane.

CHINA CAMPHOR, or FORMOSA CAMPHOR, is imported from Singapore and Bombay in chests lined with lead-foil containing about 1½ cwts.

It has been suggested to introduce the camphor trees into other countries. South Georgia and Florida are named as suitable localities. The *Laura camphora* is commonly found in all the nurseries around Paris, and sold at 5 francs for a plant 30 inches high. At full growth the tree attains an altitude of from 40 to 50 feet. The wood of the camphor tree is in favour for carpenter's work; it is light, easily worked, durable, and not liable to be attacked by insects. It is said that in Sumatra numbers of trees are cut down before one is found to repay. Not a tenth part of the trees attacked yield either camphor or camphor oil.

The camphor is distinguished by the names of head, belly, and foot, when in bulk. The head camphor is in large white flakes; the belly camphor, small brown flakes, transparent, like resin coarsely powdered; the foot, like dark-coloured resin. A native "Catty" may be divided into :—1. Capallo, or large head, = 2·2; 2. Capallo cachell, or small head, = 3·5; 3. Baddan, or belly = 4·2; 4. Cakee, or foot = 6·1; = 1 Catty, 16.

Our *importations* in 1864 were :

	cwts.	Computed real value.
Unrefined: from China	18,196	£88,464
British India :		
Bombay and Scinde	481	2,286
Singapore and Eastern Straits Settlements	1,948	9,335
Other parts	24	108
	20,649	100,193

	cwts.	Computed real value.
Refined: from France	63	£467
China	203	1,610
British India :		
Bombay and Scinde	44	319
Other parts	9	66
	319	2,462

We *exported* refined and unrefined, 18,323 cwts., valued at 93,802*l*.

CAMPHOR, ARTIFICIAL. When hydrochloric acid (muriatic) is passed into oil of turpentine, surrounded by ice, two compounds are obtained, one solid and the other fluid. The first, solid artificial camphor $C^{20}H^{16}HCl$, is white, transparent, lighter than water, and has a camphoraceous taste. The fluid is termed *liquid* artificial camphor, or terebine.

CAMPHOR JULEP. Water in which camphor is dissolved.

CAMPHOR, OIL OF LAUREL. When the branches of *Camphora officinarum* are distilled with water, a mixture of camphor and a liquid essential oil is obtained. This is the oil of camphor; it has a density of 0·910, and its composition is $C^{20}H^{16}O$. By exposure to oxygen gas, or to the action of nitric acid, it absorbs oxygen, and becomes solid camphor $C^{20}H^{16}O^2$.

This is an esteemed article in the eastern markets; it undergoes no preparation,

Digitized by Google

and though named oil, it is rather a liquid and volatile resin. The natives of Sumatra make a transverse incision in the tree to the depth of some inches, the cut sloping downwards so as to form a cavity of the capacity of a quart; a lighted reed is placed in it for about 10 minutes, and in the space of a night the cavity is filled with this fluid. The natives consider this oil of great use as a domestic remedy for strains, swellings, and inflammations.

Dr. Royle states the trees are of large dimensions, from 2½ to 7 feet in diameter. The same tree that produces the oil, would have produced the camphor if unmolested, the oil being supposed to be the first stage of the camphor's forming, and is consequently found in younger trees.

CAMPHOR STORM GLASSES. Glasses called usually storm glasses, and sold as indicators of atmospheric changes. "Storm glasses" are made by dissolving camphor 2½ drachms, nitre 38 grains, sal ammoniac 38 grains, water 9 fluid drachms, rectified spirit of wine 11 fluid drachms.

Plumose crystals form in the glass, and are said to condense and collect at the bottom of the bottle on the approach of a storm, and to rise up and diffuse themselves through the liquid on the approach of fine weather; but Dr. Parrion thinks that their weather predicting qualities are false, and that light is the agent which, together with temperature, influences the condition.

CAM-WOOD. An African dye wood, shipped principally from Sierra Leone in short logs. Mr. G. Loddiges, in his botanical cabinet, figures the plant, producing it under the name of *Baphia nitida*; it is a leguminous plant, and has been introduced into, and has flowered in this country.

CANADA PLATES. Tin plates, so called by having been made for the Canadian trade.

CANADA SUGAR. A dark sugar made from the sugar maple, *A. saccharinum*.

CANADIAN BALSAM. A product of the *Abies balsamea*, or balm of Gilead fir. The finer varieties of this balsam are used for mounting objects for the microscope. See BALSAM.

CANADIAN YELLOW ROOT. The *Hydrastis Canadensis* (*Xanthoriza*) a shrub growing in North America, so named from the colour of its root. It is intensely bitter, hence is used as a tonic medicine, and a good yellow dye is extracted from its roots.

CANARY WOOD. A wood is imported into this country under the name of Madeira mahogany, which appears to be this canary wood. It is the produce of the Royal Bay, *Laurus indica*, a native of the Canary Islands. It is rather a light wood, and of a yellow colour.

CANASTER. An American tobacco, so called from the peculiar rush basket in which it was imported.

CAND. A name in some mining districts for Fluor spar.

CANDLE. (*Chandelle*, Fr.; *Kerze*, *Licht*, Germ.) Candles are either dipped or moulded. As the quality of the candle depends upon the material employed in its manufacture, the first part of the tallow chandler's process is the sorting of the tallow. Mutton suet with a proportion of ox-tallow is selected for mould candles, because it gives them gloss and consistence. Coarser tallow is reserved for the dipped candles. After being sorted, it is cut into small pieces, preparatory to being melted or *rendered*; and the sooner this is done after the fat is taken from the carcase the better, because the fibrous and fleshy matters mixed with it promote its putrefaction. Tallow is too commonly melted by a naked fire applied to the bottom of the vessel, whereas it should be done either in a cold set-pan, where the flame plays only round the sides a little way above the bottom, or in a steam-cased pan. After being fused a considerable time, the membranous matters collect at the surface, constituting the *cracklings* used sometimes for feeding dogs, after the fat has been squeezed out of it by a press. The liquid tallow is strained through a sieve into another copper, where it is treated with water at a boiling temperature in order to wash it. After a while, when the foul water has settled to the bottom, the purified tallow is lifted out, by means of tinned iron buckets, into tubs of a moderate size, where it concretes, and is ready for use.

It is a remarkable circumstance, that the wicks for the best dipped candles are still cotton rovings imported from Turkey, notwithstanding the vast extension and perfection of cotton-spinning in this country. Four or more of these Turkey skeins, according to the intended thickness of the wick, are wound off at once into bottoms or clues, and afterwards cut by a simple machine into lengths corresponding to those of the candles to be made. The operations for cutting, twisting, and spreading wicks, are performed upon a series of threads at once. The apparatus is placed in a box, in front of which the operator sits. A reel extends across the box at the hinder part, upon which the cotton threads have been previously wound: from this reel they are drawn off into proper lengths, doubled, and cut by an ingenious mechanism. By dipping the wicks into the melted tallow, rubbing them between the palms of the hands, and

Digitized by Google

allowing the tallow which adheres to harden, they may be arranged with facility upon the broaches for the purpose of dipping. The dipping room is furnished with a boiler for melting the tallow, the dipping mould or cistern, and a large wheel for supporting the broaches. From the ceiling of the workshop a long balance-shaped beam is suspended, to one end of which a wooden frame is attached for holding the broaches with the wicks arranged at proper distances. The opposite arm is loaded with a weight to counterbalance the wooden frame, and to enable the workman to ascertain the proper size of the candles. The end of the lever which supports the frame is placed immediately above the dipping cistern; and the whole machine is so balanced that, by a gentle pressure of the hand, the wicks are let down into the melted tallow as often as may be required.

The following is a convenient apparatus for dipping candles. In the centre of the dipping-room a strong upright post A A, *fig.* 397, is erected, with turning iron pivots at its two ends. Near its middle, six mortises are cut at small distances from one another, into each of which is inserted a long bar of wood, B B, which moves vertically upon an iron pin, also passing through the middle of the shaft. The whole presents the appearance of a large horizontal wheel with twelve arms. A complete view of two of them only is given in the figure. From the extremity of each arm is suspended a frame, or port, as the workmen call it, containing 6 rods, on each of which are hung 18 wicks, making the whole number of wicks upon the wheel 1296. The machine, though apparently heavy, turns round by the smallest effort of the workman; and each port, as it comes in succession over the dipping-mould, is gently pressed downwards, by which means the wicks are regularly immersed in melted tallow. As the arms of the lever are all of the same length, and as each is loaded with nearly the same weight, it is obvious that they will all naturally assume a horizontal position. In order, however, to prevent any oscillation of the machine in turning round, the levers are kept in a horizontal position by means of small chains, *a a*, one end of which is fixed to the top of the upright shaft, and the other terminates in a small square piece of wood, *b*, which exactly fills the notch *c* in the lever. As one end of the levers must be depressed at each dip, the square piece of wood is thrown out of the notch by the workmen pressing down the handle D, which communicates with the small lever *e*, inserted into a groove in the bar B. In order that the square piece of wood fixed in one extremity of the chain, may recover its position upon the workman's raising the port, a small cord is attached to it, which passes over a pulley inserted in a groove near *c*, and communicates with another pulley and weight, which draws it forward to the notch. In this way the operation of dipping may be conducted by a single workman with perfect ease and regularity, and even despatch. No time is lost, and no unnecessary labour expended, in removing the ports after each dip; and, besides, the process of cooling is much accelerated by the candles being kept in constant motion through the air. The number of revolutions which the wheel must make, in order to complete one operation, must obviously depend upon the state of the weather and the size of the candles; but it is said that, in moderately cold weather, not more than two hours are necessary for a single person to finish one wheel of candles of a common size. Upon the supposition, therefore, that six wheels are completed in one day, no less a number than 7776 candles will be manufactured in that space of time by one workman.

397

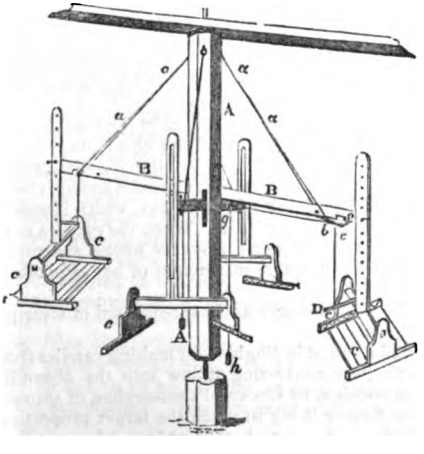

The process of moulding, is even less complicated in its details than that of dipping. The moulds are made of some metallic substance, usually pewter, and consist of two parts. The shaft or great body of the mould is a hollow cylinder, finely polished in the inside, and open at both extremities. The top of the mould is a small metallic cup, having a moulding within side, and a hole to admit the wick. The two parts are soldered together, and when united, as will readily be imagined, have the shape of a moulded candle. A third piece, called the foot, is sometimes added: it is a kind

Digitized by Google

of small funnel, through which the liquid tallow runs into the mould, and, being screwed to the opposite extremity of the shaft, is removable at pleasure. This additional piece may certainly be useful in very mild weather; since, by removing it, the candles may be drawn more easily from the moulds; but, in general, it may be dispensed with.

Eight or twelve of these moulds, according to their size, are fixed in a frame, which bears a great resemblance to a wooden stool, the upper surface of which forms a kind of trough. The tops of the moulds point downwards, and the other extremity, which is open, is inserted into the trough or top of the stool, and made quite level with its upper surface. In order to introduce the wicks into the mould, the workman lays the frame upon its side on an adjoining table, and holding in his left hand a quantity of wicks, previously cut to the proper length, he introduces into the mould a long wire with a hooked point. As soon as the hook of the wire appears through the hole in the top of the mould, he attaches to it the looped end of the wick, and, immediately drawing back the wire, brings the wick along with it. In this manner each mould in succession is furnished with a wick. Another workman now follows, and passes a small wire through the loop of each wick. This wire is obviously intended to keep the wick stretched, and to prevent it from falling back into the mould upon the frame being placed in the proper position for filling. The frame is then handed to the person that fills the moulds, who previously arranges the small wires in such a manner that each wick may be exactly in the axis of the mould.

The moulds are filled, by running tallow into each of them, or into the trough, from a cistern furnished with a cock, and which is regularly supplied with tallow of the proper temperature from an adjoining boiler. When the workman observes that the moulds are nearly half filled he turns the cock, and laying hold of that portion of the wick which hangs out of the mould, pulls it tight, and thus prevents any curling of the wick, which might injure the candles: he then opens the cock, and completes the process of filling. The frame is now set aside to cool; and when the tallow has acquired a proper consistence, which the workman easily discovers by a snapping noise emitted by the candles upon pressing his thumb against the bottom of the moulds, he first withdraws the small wires which kept the wicks tense, and then, scraping off the loose tallow from the top of the frame with a small wooden spade, he introduces a bodkin into the loop of the wick, and thus draws each candle in succession from its mould. The candles are now laid upon a table for inspection, and afterwards removed to the storehouse. Previous to storing them up, some candle-makers bleach their candles, by exposing them to the air and dews for several days. This additional labour can be necessary only when the dealer is obliged to have early sales; for if the candles are kept for some months, as they ought to be, before they are brought to market, they become sufficiently whitened by age.

Wax Candles.— Next to tallow, the substance most employed in the manufacture of candles is wax. Wax candles are made either by the hand or with a ladle. In the former case, the wax, being kept soft in hot water, is applied bit by bit to the wick, which is hung from a hook in the wall; in the latter, the wicks are hung round an iron circle, placed immediately over a large copper-tinned basin full of melted wax, which is poured upon their tops, one after another, by means of a large ladle. When the candles have by either process acquired the proper size, they are taken from the hooks, and rolled upon a table, usually of walnut-tree, with a long square instrument of box, smooth at the bottom.

Spermaceti Candles, are moulded in the same manner as those composed of stearine, or stearic acid, to be described presently.

In June, 1825, M. Gay-Lussac obtained a patent in England for making candles from *margaric and stearic acids*, called *stearine*, by converting tallow into the above fat acids by the following process:— Tallow consists, by Chevreul's researches, of *stearine*, a solid fat, and *elaine*, a liquid fat; the former being in much the larger proportion. When tallow is treated with an alkaline body, such as potash, soda, or lime, it is saponified; that is, its stearine and elaine become respectively stearic and elaic acids, and, as such, form compounds with these bases. When by the action of an acid, such as the sulphuric or muriatic, these combinations are decomposed, the fats reappear in the altered form of stearic and elaic acids; the former body being harder than tallow, and of a texture somewhat like spermaceti, the latter body being fluid like oil. "The decomposition of the soap should be made," says the patentee, "in a large quantity of water, kept well stirred during the operation, and warmed by steam introduced in any convenient way. When the mixture has been allowed to stand, the acid of the tallow or fat will rise to the surface, and the water being drawn off, will carry the alkaline or saline matters with it; but, if the acids of the tallow should retain any portion of the salts, fresh water may be thrown upon it, and the whole well agitated, until the acids have become perfectly free from the alkaline matters; and when allowed to cool, the acids will be formed into a

Digitized by Google

solid mass. This mass is now to be submitted to considerable pressure in such an apparatus as is employed in expressing oil from seeds; when the liquid acid will run off in the form of a substance resembling oil, leaving a solid matter, similar, in every respect, to spermaceti, which is fit for making candles."

The wick to be used in the manufacture of the Stearine candles, and which forms one of the features of this invention, is to be made of cotton yarn, twisted rather hard, and laid in the same manner as wire is sometimes coiled round the bass strings of musical instruments. For this purpose, straight rods or wires are to be procured, of suitable lengths and diameters, according to the intended size of the candles about to be made; and these wires, having been covered with cotton coiled round them, as described, are to be inserted in the candle moulds as the common wicks are; and when the candle is made, and perfectly hard, the wire is to be withdrawn, leaving a hollow cylindrical aperture entirely through the middle of the candle. (See STEARINE.) The first successful application of the fat acid, or stearic candles, appears to have been made by Messrs. Motard and Nilly. They made stearine candles, which they called "*bougies de l'étoile*," for which the "Society of Encouragement" voted them their silver medal.

Messrs. Hempbell and Blundell have given a very minute account of the process for making palm oil, stearic and margaric acids, in the specification of their patent for this mode of manufacturing candles:—

1. Their first process is called *crystallisation*, which consists in pouring the melted palm-oil into iron pans, allowing it to cool slowly, whereby, at about 75° F., the elaine separates from the crystalline stearine and margarine.

2. The concreted oil is subjected to the action of an hydraulic press, in order to separate the elaine from the solid fats.

3. This process is called *oxidation*. To 104 lbs. of the stearine and margarine, melted in an iron pan, about 12 lbs. of slaked and sifted quicklime are added, with diligent stirring, during which the temperature is to be slowly raised to 240° F., and so maintained for about 3 hours, till a perfect chemical combination takes place. This is shown by the mass becoming thin, transparent, and assuming a glassy appearance when it cools. The fire being now withdrawn, cold water is added, very gradually at first, with brisk stirring till the whole mass falls into a state of powdery granulation, when it is passed through a wire sieve to break down any lumps that may remain.

4. *Separation of the Stearic and Margaric Acids* from the lime. For this purpose, as much muriate of lime (chloride of calcium) is taken as will, with its equivalent quantity of sulphuric acid (8 lbs. of dry muriate of lime, require 7 lbs. of the strongest sulphuric acid), produce as much muriatic acid as will dissolve the lime combined with the fat acids: and therefore that quantity of muriate of lime dissolved in water must be treated with as much sulphuric acid as will saturate its lime and throw it down in the state of sulphate of lime. Add the supernatant solution of muriatic acid in such proportion to the stearate and margarate of lime as will rather more than saturate the lime. Three pounds of muriatic acid diluted with 9 lbs. of water are stated as enough for 1 lb. of lime. This mixture is to be let alone for 3 or 4 days, in order to insure the complete separation of the lime from the fat acids; and then the mixture is heated so as to melt and cause them to separate in a stratum on the top of the liquid. The resulting muriate of lime is drawn off into another tub, and decomposed by its dose of sulphuric acid, so as to liberate its muriatic acid for a fresh operation.

5. The fat acids, being well washed by agitation with hot water, are then set to cool and crystallise, in which state they are subjected to the action of the hydraulic press, at a temperature of 75° F., whereat the margaric acid runs off from the solid stearic acid.

6. *Bleaching.* The stearic acid is taken from the press, and exposed upon water in large shallow vessels placed in the open air, where it is kept at the melting temperature from 1 to 12 hours, stirring meanwhile, in order to promote the blanching action of the atmosphere. The margaric acid is bleached in a similar manner in separate vessels.

7. *Refining Process.* The fat is warmed again, and poured in a liquid state into an agitating tub; where, for every 1000 lbs. of the stearic acid, about 2½ lbs. of common black oxide of manganese, and 40 lbs. of concentrated sulphuric acid, diluted with 200 lbs. of pure water, are to be used. This solution ("mixture"), while warm from the heat evolved in diluting the acid, is placed in a suitable vessel above the agitating tub. The stearic acid being at the melting point, in the vessel below, agitation is to be given with a revolving shaft, while the mixed manganese and acid are run slowly down into it, till the whole be well mixed, which generally requires about 2 hours. The mass is allowed to lie in this state for 48 hours; after which it may be boiled by steam for 2 or 3 hours, when it will be sufficiently refined. The sulphuric acid, which is at the bottom, is now run off, and the stearic acid which remains is well washed with pure water. It is then put into large conical vessels of stone-ware, inclosed in a box

Digitized by Google

or jacket, kept warm by steam-heat, and lined with conical bags of a suitable strong filtering paper, through which, being warm, it finds its way; and when the stearic acid has been thus filtered, it is run into blocks, when it will be found to be a beautiful stearic acid or palm-wax, and is ready to be made into candles in the usual way.

The chief solid constituent of palm oil is margaric acid. This they direct to be melted with tallow, in the proportion of from 10 to 20 lbs. of the former to 100 lbs. of the latter. See *Newton's Journal, C. S.*, xi. 207.

Price and Co. introduced, in 1840, on the occasion of her Majesty's marriage (when, for the illuminations, a cheap self-snuffing candle was required), a new composite candle, which was a mixture of stearic acid and cocoa-nut stearine. Mr. George Gwynne, in 1840, patented a process for purifying the fatty acids by distillation: this was followed by a similar patent by Dubrunfant,—and Mr. Wilson, of Belmont, Vauxhall, obtained in August, 1842, a patent for improvements in treating fats for making candles. These advances led to many modifications in candle manufacture.

If distilled fats are used in making composite candles, they are bleached and hardened in that operation. When palm oil is the material, it is first saponified, then distilled,—granulated by fusion and slow cooling,—and cold-pressed; by which means stearic acid and a light-coloured oil are obtained, which may be mixed with the stearine of cocoa-nut oil, or other stearine. A cheaper article may be had by mixing the entire product of the above distillation with half its weight of distilled and cold-pressed stearic acid of tallow. Tallow is deprived of its oleine by pressure, accompanied by artificial cold if necessary; this being added to the other hard matter, the mixture is converted into fatty acids, and distilled, and the entire product of distillation is employed for making candles; or it may be pressed to make them harder. As distilled stearic acid is more crystalline than undistilled, 2 or 4 per cent. of wax may be added to assist the combination of the fatty acid with the stearine.

Candles consisting of alternate layers of tallow and stearine have been made by dipping their wicks alternately in these two fatty bodies in a fluid state. Mr. W. Sykes has gone to the expense of a patent on the contrivance. The wicks are impregnated with a solution of bismuth or borax.

In a lecture delivered at the Society of Arts by Mr. Wilson, and published in their journal, he described the progress of the more recent improvements. In this he says:—"Candles, beautiful in appearance, were made by distilling the cocoa-nut acids; but, on putting them out, they gave off a choking vapour, which produced violent coughing." This prevented those candles from being brought into the market. "By distilling cocoa-nut lime-soap, we made beautiful candles, resembling those made from paraffine, burning perfectly; but the loss of material in the process was so great, that the subsequent improvements superseded its use. Under one part of this patent, the distillation was carried on sometimes with the air partially excluded from the apparatus, by means of the vapour of water, sometimes without, the low evaporating point of the cocoa-nut acids rendering the exclusion of air a matter of much less importance than when distilling other fat acids." At this time, in conjunction with Mr. Jones, Mr. Wilson appears to have first tried using the vapour of water to exclude the air from the apparatus during distillation. This led, in 1842, E. Price and Co. to patent, in the names of Wilson and Jones which involved the treatment of fats, previously to distillation, with sulphuric acid, or nitrous gases. M. Frémy, in his valuable paper in the "Annales de Chimie," describes treating oils with half their weight of concentrated sulphuric acid, by which their melting point was greatly raised. He gave, however, particular directions that the matter under process should be kept cool. Instead of doing this, Mr. Wilson found it advantageous to expose the mixture of fat acid and fat to a high temperature, and this is still done at Price's works.

"Our process of sulphuric acid saponification was as follows. Six tons of the material employed—usually palm oil, though occasionally we work cheap animal fat, vegetable oils, and butter, and Japan wax—were exposed to the combined action of $6\frac{3}{4}$ cwts. of concentrated sulphuric acid, at a temperature of 350° F. In this process the glycerine is decomposed, large volumes of sulphurous acid are given off, and the fat is changed into a mixture of fat acids, with a very high melting point. This is washed, to free it from charred matter and adhering sulphuric acid, and is then transferred into a still, from which the air is excluded by means of steam. The steam used by us is heated in a series of pipes similar to those used in the hot-blast apparatus in the manufacture of iron, the object of heating the steam being only to save the still, and reduce to a small extent gaseous loss in distillation." "We still," says the patentee, "employ this process, and in some cases reduce the quantity of acid employed to 4 lbs., and even 3 lbs., to a cwt. of the fat."

Vegetable tallow melts at a degree of heat somewhat above that of animal tallow, but considerably below that of vegetable wax. Mr. Wilson treats his tallow by

Digitized by Google

putting 6 tons of it into an iron still capable of holding 9 tons, heats it gradually to 350° F., and then adds gradually 1440 lbs. of sulphuric acid of 1·8 specific gravity. At the expiration of about two hours, the tallow is pumped into a vessel, containing water slightly acidulated with sulphuric acid; and is therein agitated by free steam passing through it for 2 hours. The materials are then left to repose for 6 hours; both these vessels, and the former, should be provided with a cover and a means of conveying the gases which may be evolved into a chimney. The vegetable tallow is next distilled in such a manner that the atmosphere is excluded. This is best effected by the use of steam highly heated, which he introduces into the still, in numerous jets below the tallow. The distilled products are received into condensers, and they may be used alone, or they may be mixed with other matters for making the best class of candles. The patentee improves paraffine by a like process. He makes candles with 2 or 3 wicks, by mixing palm oil pressed with tallow, or the above distilled fat, for burning in candle lamps.

In 1854, Mr. Tighlman obtained a patent for the exposure of fats and oils to the action of water at a high temperature, and under great pressure, in order to cause the combination of the water with the elements of the neutral fats; so as to produce at the same time free fat acid and solution of glycerine. See GLYCERINE.

He proposed to effect this by pumping a mixture of fat and water, by means of a force-pump, through a coil of pipe heated to about 612° F., kept under a pressure of about 2000 lbs. to the square inch; and he states that the vessel must be closed, so that the requisite amount of pressure may be applied to prevent the conversion of water into steam. Mr. Wilson improved upon this process, by passing steam into fat at a high temperature; and by this process hundreds of tons of palm oil are now treated. The glycerine and fat distil over together, but no longer combined; and the former, being separated, is subjected to a redistillation, by which it is purified. This distillation is effected by transmitting through the fat contained in an iron still, steam at about 600° or 700° F., heated by passing through iron pipes laid in a fire. The steam is transmitted till the oily matter is heated to about 350°; the vapours produced being carried into a high shaft by a pipe from the cover of the iron vessel. The hot oily matter is then run into another vessel made of brick lined with lead, and sunk in the ground, for the purpose of supporting the brick-work under or against the internal pressure of the fluid. It has a wooden cover lined with lead, directly beneath which, and extending across the vessel, is a leaden pipe, 1 inch in diameter, having a small hole in each side, at every 6 inches of its length; and through this pipe is introduced a mixture of 1000 lbs. of sulphuric acid, sp. gr. 1·8, and the same weight of water. The introduction of the mixture, which falls in divided jets into the heated fat, produces violent ebullition; and by this means the acid and fat are perfectly incorporated before the action of the acid becomes apparent by any considerable discoloration of the fat. As the ebullition ceases, the fat gradually blackens; and the matter is allowed to remain for 6 hours after the violent ebullition has ceased. The offensive fumes produced are carried off by a large pipe, which rises from the top of the vessel, then descends, and afterwards rises again into a high chimney. At the downward part of this pipe a small jet of water is kept playing, to condense such parts of the vapours as are condensable. At the end of the 6 hours above mentioned, the operation is complete, and the product is then pumped into another close vessel and washed, by being boiled up (by means of free steam) with half its bulk of water. The water is drained off, and the washing repeated, except that in the second washing the water is acidulated with 100 lbs. of sulphuric acid. The ultimate product is allowed to settle for 24 hours; after which it is distilled in an atmosphere of steam — once, or oftener — until well purified; and the product of distillation is again washed, and after being pressed in the solid state, is applied to the manufacture of candles.

The following definitions of terms applied to candles are by Mr. Wilson:—

Belmont Sperm.—Made of hot-pressed, distilled palm acid.

Belmont Wax.—The same material, tinged with gamboge.

Best Composite Candles.—Made of a mixture of the hard palm acid, and stearine of cocoa-nut oil.

Composites, Nos. 1, 2, *and* 3, are made of palm acids, and palm acids and cocoa-nut stearine, the relative proportions varying according to the relative market prices of palm oil and cocoa-nut oil at the particular time when the candles are manufactured.

Composite, No. 4.—A description of candle introduced at a price a very little above the price of tallow dip candles. They are somewhat dark in colour, but give a good light.

The highest priced candles are usually made in the ordinary mould; but at Price and Co.'s manufactory they have a machine for moulding the ordinary stearine candles,

Digitized by Google

and others of a similar nature. When one set of candles is discharged from the moulds, the moulds are re-wicked for the next process of filling. These moulds are arranged side by side, eighteen in number, on a frame; and for each mould there is a reel capable of holding sixty yards of wick, enclosed in a box. The moulded candle, being still attached to the cotton wick, when it is forced out of the mould, brings the fresh wick into it. The moulded candles are, by a very ingenious contrivance, held firm in a horizontal position while a knife passes across and severs the wick. The wicks for the new set of candles are secured, by forceps, firmly to the conical caps of the moulds; these are carried into a vertical position, and slid upon a railway to a hot closet, where they become sufficiently warm to receive the fat, which, kept at the melting point by steam-pipes, is held in a cistern above the rails; from this cistern the moulds are filled by as many cocks, which are turned by one impulse. If we imagine an extensive series of these sets of moulds travelling from the machine over a railway, in regular order, and that, when the fat has become solid, these return, the candles are discharged, and the process is renewed,—the machine will be tolerably well understood. Each machine holds about 200 frames of moulds, and each contains 18 bobbins, starting each with 60 yards of cotton wick.

Night-Lights.—These are short thick cylinders of fat, with a very thin wick, so proportioned one to the other, that they burn any required number of hours. The moulds in which these are made are metal frames, perforated with a number of cylindrical holes, and having a movable bottom, with a thin wire projecting from it into every mould. These are filled with melted fat, and, when cold, the bottoms are forced up, and all the cylinders of fat ejected, each having a small hole through which the wick, a cotton previously impregnated with wax, is inserted. This being done, the night light, being pressed on a warm porcelain slab, is melted sufficiently to cement the wick. These night-lights are burned in glass cylinders, into which they fit.

Child's Night-Lights are melted fat poured into card-board boxes, which have a hole in the bottom, through which the wick and its metallic support are placed.

Dr. Ure made a set of experiments upon the relative intensities of light, and duration of different candles, the results of which are contained in the following Table:—

Number in a Pound.	Duration of a Candle.	Weight in Grains.	Consumption per Hour in Grains.	Proportion of Light.	Economy of Light.	Candles equal one Argand.
	h. *m.*					
10 mould - -	5 9	682	132	12¼	68	5·7
10 dipped - -	4 36	672	150	13	65½	5·25
8 mould - -	6 31	856	132	10½	59½	6·6
6 ditto - -	7 2½	1160	163	14¾	66	5·0
4 ditto - -	9 3·6	1707	186	20¼	80	3·5
Argand oil flame	- -	- -	512	69·4	100	

A Scotch mutchkin, or ⅛th of a gallon, of good seal oil, weighs 6010 gr., or 13$\frac{1}{16}$ oz. avoirdupois, and lasts in a bright Argand lamp 11 hours 44 minutes. The weight of oil it consumes per hour is equal to 4 times the weight of tallow in candles 8 to the pound, and ¼th the weight of tallow in candles 6 to the pound. But its light being equal to that of 5 of the latter candles, it appears from the above table that 2 pounds weight of oil, value 9*d.*, in an Argand, are equivalent in illuminating power to 3 pounds of tallow candles, which cost about 2 shillings. The larger the flame in the above candles the greater the economy of light.

In 1864 we *imported* candles of various kinds from the following places :—

	cwts.	£
STEARINE Candles:		
From Russia - - - - - -	8,788	35,586
Holland - - - - - -	10,562	40,589
Belgium - - - - - -	28,435	113,579
France - - - - - -	937	3,651
Other parts - - - - - -	170	624
	48,892	194,029
PARAFFINE Candles - - - -	5	26
SPERMACETI do. - - - -	31	178
Tallow do. - - - -	289	607
Wax do. - - - -	181	1.863

Digitized by Google

The importance of our candle manufacture is shown by the *Exports* of the year 1864:

STEARINE AND COMPOSITE:

	lbs.	£
To Mexico	35,745	1,447
Channel Islands	38,616	1,335
British Possessions in South Africa	570,493	18,544
British India:		
Bombay and Scinde	44,663	1,894
Madras	28,966	1,177
Bengal and Pegu	13,900	562
Singapore and Eastern Straits Settlements	5,702	236
Ceylon	18,193	703
Australia	2,041,930	80,880
British North America	104,191	4,009
British West India Islands and British Guiana	629,610	22,153
Other Countries	287,727	11,687
	3,819,736	144,627

PARAFFINE AND OTHER SORTS:

	lbs.	£
To Channel Islands	99,755	2,568
British Possessions in South Africa	38,683	1,392
Australia	59,313	2,329
British West India Islands and British Guiana	99,377	3,020
Other Countries	114,623	5,693
	411,821	15,002

Of Foreign manufacture we exported 35,301 cwts.

CANE-MILL. The mill employed for crushing the sugar cane. See SUGAR.

CANES. Canes of various kinds are employed in manufactures, as the Sugar cane, Bamboo canes, and Rattan canes, &c. The bamboo is a plant of the reed kind, growing in the East Indies, and other warm climates, and sometimes attaining the height of 60 feet. Old stalks grow to five or six inches diameter, and are so hard and durable as to be used for building, and for all sorts of furniture, for water-pipes, and for poles to support palanquins. The smaller kinds are used for walking-sticks, flutes, &c.

Rattan canes are often confounded with the Bamboo. They are, however, the produce of various species of the genus *Calamus*. They are cylindrical, jointed, very tough, and strong, from the size of a goosequill to that of the human wrist, and from fifty to a hundred feet in length. They are used for wicker-work, seats of chairs, walking-sticks, &c.

Our *importations* of canes of various kinds in 1864 were as follows:

RATTANS not ground:	Number.	Computed real value.
From Holland	1,419,868	£3,402
British India:		
Bengal and Pegu	793,519	846
Singapore and Eastern Straits Settlements	12,761,404	29,794
Other Parts	1,049,068	2,565
	16,023,859	37,607
CANES OR STICKS, unenumerated:		
From China	3,447,047	14,890
British India:		
Bengal and Pegu	1,000	25
Singapore and Eastern Straits Settlements	1,484,893	14,313
British West India Islands	421,302	4,506
Other Parts	183,380	1,675
	5,537,622	35,409
Bamboos	328,985	1,057
Sticks (walking), mounted, painted, &c.	186,681	4,032

CANGICA WOOD, called also in England *Angica*. It is of a rose-wood colour, is imported from the Brazils in trimmed logs from eight to ten inches diameter. As a variety in cabinet work, small quantities of this wood are employed.

CANNABIC COMPOSITION. This material for architectural decoration is

Digitized by Google

described by Mr. B. Albano to have a basis of hemp, amalgamated with resinous substances, carefully prepared and worked into sheets of large dimension.

Ornaments in high relief and with great sharpness of detail are obtained by pressure of metal discs, and they are of less than half the weight of papier maché ornaments, sufficiently thin and elastic to be adapted to wall surfaces, bearing blows of the hammer, and resisting all ordinary actions of heat and cold without change of form. Its weather qualities had been severely tried on the continent, as for coverings of roofs, &c., remaining exposed without injury.

This composition is of Italian origin, and in Italy it has been employed for panels, frames, and centres. It is well fitted to receive bronze, paint, or varnish; the material is so hard as to allow gold to be burnished, after gilding the ornaments made of it.

CANNEL COAL. Cannel coal is obtained most abundantly in Lancashire, especially around Wigan, which district produces 650,000 tons per annum, while the Manchester district produces about 130,000 tons. It is found abundantly in Scotland, where it is known as gas coal; the quantity produced in 1865 was 322,000 tons. In Flintshire a very fine cannel has been found, especially at Leeswood, near Mold; about 150,000 tons are raised, nearly all of which is used for the distillation of coal oil. Cannel coal is also found in Derbyshire, in Warwickshire, and in Yorkshire in considerable quantities; there are some other localities in which it is procured. The mode of occurrence of cannel coal, its physical character, chemical composition, uses &c., will be considered under COAL.

The coal, when worked for ornament, is cut with a saw, and the pieces are roughshaped with a chopper. For making a snuff-box, whether plain, screwed, or excentric turned, the *plank way*, or the surface parallel with the seam, is most suitable; it is also proper for vases, the caps and bases of columns, &c. Cylindrical pieces, as for the shafts of columns, should be cut from either edge of the slab, as the laminæ then run lengthways, and the objects are much stronger: cylindrical pieces thus prepared, say 3 inches long and $\frac{3}{8}$ths of an inch diameter, are so strong they cannot be broken between the fingers. Similar pieces have been long since used for the construction of flutes, and in the British Museum may be seen a snuff-box of cannel coal, said to have been turned in the reign of Charles I., and also two busts of Henry VIII. and his daughter Lady Mary carved in the same material. The plank-way surfaces turn the most freely, and with shavings much like those of wood; the edges yield small chips, and at last a fine dust, but which does not stick to the hands in the manner of common coal. Flat objects, such as inkstands, are worked with the joiners' ordinary tools and planes. The edges of cannel coal are harder and polish better than flat surfaces.—*Holtzapffel.* See COAL and BOGHEAD COAL.

CANNON. See ARTILLERY and SHELL.

CANNON-BALL TREE. *Couroupite Guianensis.* A tree belonging to the LECYTHIDEÆ, a suborder of the dicotyledonous plants belonging to the natural order *Myrtaceæ*. These trees are natives of South America, and are distinguished by their very large fleshy flowers and singular fruit. The *Lycethis ollaria* is found in the forests of Brazil and Cumâna. The fruit is about the size of a child's head; and it contains numerous edible seeds. The natives, who eat the seeds, and use the case for various purposes, call the fruit "the monkey pots." The *Lycethis Zapucajo* is a native of Guiana: its fruit is about the size of the above; it contains numerous seeds, larger than almonds, and of an agreeable taste. These are the sapucaya nuts of the fruiterers' shops. The Brazil nuts are the produce of juvia tree. The cannon-ball tree obtains its name from the peculiar large heavy woody fruit, which is as big as a thirty-six pound shot. The shells of this fruit are used for drinking vessels.

CANTON'S PHOSPHORUS. Sulphate of lime being heated with charcoal in a crucible is converted into sulphide or sulphuret of lime. If this preparation is spread over a sheet of paper, and exposed to bright sunshine, it will, when taken into a dark room, emit a phosphorescent light. This solar phosphorus was discovered by Canton, and is prepared according to his directions by calcining for an hour at a red heat a mixture of 3 parts of ground oyster shells and 1 part of sulphur. See PHOSPHORUS and PYROPHORUS.

CANTHARIDES. The blister beetle or Spanish fly, the *Cantharis vesicatoria.* Cantharides are imported from St. Petersburg in cases, each containing 160 to 170 lbs., and also from Messina in barrels or cases holding each 100 lbs. See Pereira's "Materia Medica." In 1864 we *imported* 27,566 lbs., value £3,360.

CANVAS. (*Canevas*, Fr.; *Kanevas*, Germ.) A coarse cloth made of hemp or flax, which is used for the sails of ships and for tents. It has been found that sails of ships made with the selvages and seams of the canvas running down parallel to their edges, are very apt to bag, and become torn in the middle, from the strain to which they are subjected by the pressure of the wind. To obviate this inconvenience a mode of making sails, with the seams and selvages running diagonally, was proposed by

Digitized by Google

Admiral Brooking, and a patent granted to him for the same on 4th of November, 1828. The invention of Messrs. Ramsay and Orr, has a similar object, viz., that of giving additional strength to sails by a peculiar manner of weaving the canvas of which they are made.

The improvement consisted in weaving the canvas with diagonal threads; that is, placing the weft yarn, or shoot, in weaving, at an oblique angle to the warp yarns, instead of making the decussation of the warp, or weft threads, or yarns, at right angles to each other, as in the ordinary mode of weaving.

To accomplish this object the loom must be peculiarly constructed; its warp and work beams must stand at an oblique angle with the sides of the loom, and the batten and slay must be hung in a peculiar manner, in order to beat up the weft or shoot, in lines ranging diagonally with the warp.

Canvas painted of various patterns is used for covering halls, &c., and is generally called *floor cloth*. A finer kind of canvas, properly prepared, is employed by artists.

CAOUTCHOUC, GUM-ELASTIC, OR INDIAN-RUBBER (*Caoutchouc*, Fr.; *Kautschuk Federharz*, Germ.) occurs as a milky juice in several plants, such as the *siphonia, cahuca*, called also *nevea guianensis, cautschuc, jatropha elastica, castilleja elastica, cecropia pelleta, ficus religiosa* and *undica, urceolaria elastica*, &c. Dr. Lindley's account of the plants that yield the most important supplies of commercial caoutchouc, with plates of the leaves and flowers, will be found in Mr. Hancock's work on Caoutchouc. These are stated to be *siphonia elastica, Hancornia speedosa, ficus elastica*, and *urceola elastica*. It is, however, extracted chiefly from the first plant, which grows in South America and Java. The tree has incisions made into it through the bark in many places, and it discharges the milky juice, which is spread upon clay moulds, and dried in the sun, or with the smoke of a fire, which blackens it. Portions of this milky juice had been occasionally sent to Europe in bottles; some few arrived with the milky emulsion, but generally they were found to be resolved into a coagulum floating in an aqueous solution. A small bottle from Cayenne or the Isle of France, in the possession of M. D'Arcet, passed some years without change, but the severe winter of 1788-9 caused it to pass to the solid state, and the bottle was broken.

Sir Joseph Banks is reported to have had a bottle of liquid unaltered, but which afterwards was decomposed. Fifty gold louis d'ors were afterwards offered by him at Lisbon in vain to receive a second supply.

Caoutchouc, Gum Elastic, or Indian-Rubber, are the general names for a substance now so well known, familiar, and important, that it seems matter for surprise that the latter half of the preceding century should have passed away before it was made known to Europe by memoirs read to a learned body; for the remainder of the century, its extraordinary property of elasticity and the grotesque objects made by the Indians, caused it to be met with in the cabinets of the curious; its general knowledge and use was confined to erasing marks of black lead pencil from paper, and in this country it received the common name of lead-eater.

Europe is indebted to the observations of M. de la Condamine, who, despatched from France on a scientific mission, found the natives and residents of that part of South America which he visited, constantly using syringes, bottles for non-corrosive liquids, boots, and many other articles, made of Indian rubber. In 1736, he wrote an account to the Academy of Sciences at Paris of this substance; which during his ten years' residence in Para, and journeys in the country, and along the banks of the Amazon, he had constant observation of the use of by the natives.

He describes the forms of bottles and articles moulded with clay, coated with the milky juice of trees, in successive layers, and when dried in the sun, the earth broken out, and that the Indians, with a point of hard wood, impressed ornaments upon the soft mass.

M. Condamine described the resin spread upon cloth as forming a waterproof covering; its great use for bagging to keep biscuits, food and clothing dry from rain, damp and water, and as a substitute for tarpaulins; and he especially remarks the use of a great canvas prepared with liquid Indian-rubber, to cover the quadrant circle as it stood on its legs, which allowed it to be left in the rain and snow, and thus enabled them to make observations at intervals of weather, and avoid great labour of removing the instruments to boxes and places of shelter. He remarks that, at the missions of the Cordilleras and the Andes, boots are made which resist water, and appear like skins when they have been smoked.

To obviate the adhesion of objects recently made to each other, especially if the sun is upon them, "Spanish white, and even dust, is employed:" the inconvenience is thus prevented, and the articles immediately take the brown colour which is ultimately acquired by the exposure of the white juice to the sun and air, smoke and fire, methods employed by the Indians.

M. Condamine found in the province of Emeraldes, a substance called Hhévé; it

Digitized by Google

is obtained by a single incision from the plants, and is a white liquid like milk, which hardens and blackens in the air. They make flambeaux 1¼ inch thick and 2 feet long, that burn very well without a wick for 24 hours, with a brilliant flame and without any disagreeable odour. The caoutchouc was wrapped in two leaves of bananier to form the flambeaux; he used these lights habitually, on his route along the river Emerandes, and especially in the wood of Sylanchè, where he was detained for days.

It was in 1751, that M. Condamine brought the subject into notice, for his friend Mons. Fresneau had found and described trees in Cayenne, yielding elastic resin. Writing to his friend, he records the localities, trees, tools, and details for obtaining the sap, and forming articles. He also found that the heat of a sand-bath, with nut oil, softened, and in a manner, dissolved the caoutchouc.

M. Condamine concludes his remarks upon the memoir of M. Fresneau with words of sufficient import, and indeed with prophetic spirit, and says, "it will be an exclusive object of commerce for that colony which possesses this species of treasure." Such were his words a century past.

MM. Herissent and Macquer in 1761, gave their chemical observations to the Academy Royal on caoutchouc, or elastic resin of Cayenne. They refer to the softening and solution by oils and heat, "but the caoutchouc does not again take its solidity or elasticity." By rectifying oil of turpentine upon lime and dissolving caoutchouc in it, they obtained a pasty mass which allowed the caoutchouc to regain its former elastic state. They point out that ether may be advantageously used, and they complain of the great expense of Dippel's animal oil as a solvent. While pointing out the surgical uses of caoutchouc, Macquer describes the necessity for carefully rectifying the ether, taking 8 or 10 pounds, and only receiving the first 2 pounds for the solution of caoutchouc. He used instead of clay, moulds of wax, held by pincers, and plunged in the ethereal solution, and by repeated coatings, allowing the ether to evaporate, a thin covering was obtained; by the heat of boiling water the wax flowed out, and a tube of caoutchouc remained. He states that he found it difficult to get the tubes uniform.

M. Grossart in 1768, published his experiments to obtain good tubes of Indian rubber by means of ether and boiling water, these memoirs seem to have remained without sufficient reference and study.

It has been received as an opinion in England and America, that one of the earliest notices of the useful properties of Indian rubber is that given by Dr. Priestley, in a work evidently got up with great care, called, "A Familiar introduction to the Theory and Practice of Perspective, by Joseph Priestley, LL.D., London, 1770." At the end of the preface is the following addition:—

"Since this work was printed off, I have seen a substance excellently adapted to the purpose of wiping from paper the marks of a black-lead pencil. It must, therefore, be of singular use to those who practice drawing. It is sold by Mr. Nairne, Mathematical Instrument maker, opposite the Royal Exchange. He sells a cubical piece of about half an inch, for three shillings, and he says it will last several years."

It will be remarked, that no name for the substance is mentioned; the preface is dedicated "to Sir Joshua Renolds, Knt., F.R.S., Leeds, March 20th, 1770;" and we may fairly conclude that the substance was a novelty in art and trade.

It seems probable, that the experiments with balloons, and the application of air-tight varnishes, especially by Messrs. Charles and Robert, called more general attention to the properties of Indian rubber in Europe.

Mr. Hancock says, "This substance came first into notice about the beginning of the last century, moulded into the shapes of bottles and animals. It was sold as high as a guinea the ounce, and used for rubbing out pencil marks; but scarcely anything was known of its history, except that it came from America." Such are the brief historical notices of this now important substance.

The juice itself has been of late years imported. It is of a pale yellow colour, and has the consistence of cream. It becomes covered in the bottles containing it with a pellicle of concrete caoutchouc. Its specific gravity is 1·012. When it is dried it loses 55 per cent. of its weight; the residuary 45 is elastic gum. When the juice is heated it immediately coagulates, in virtue of its albumen, and the elastic gum rises to the surface. It mixes with water in any proportion; and, when thus diluted, it coagulates with heat and alcohol as before.

The specific gravity of caoutchouc is 0·925, and it is not permanently increased by any degree of pressure. By cold or long quiescence it becomes hard and stiff. When the milky juice has become once coherent, no means hitherto known can restore it to the emulsive state. By long boiling in water it softens, swells, and becomes more readily soluble in its peculiar menstrua; but when exposed to the air it speedily resumes its pristine consistence and volume. It is quite insoluble in alcohol; but in ether, de-

Digitized by Google

prived of alcohol by washing with water, it readily dissolves, and affords a colourless solution. When the ether is evaporated, the caoutchouc becomes again solid, but is somewhat clammy for a while. When treated with hot naphtha, distilled from native petroleum, or from coal tar, it swells to 30 times its former bulk; and if then triturated with a pestle, and pressed through a sieve, it affords a homogeneous varnish, which being applied by a flat edge of metal or wood to cloth, prepares it for forming the patent water-proof cloth of Macintosh. Two surfaces of cloth, to which several coats of the above varnish have been applied, are, when partially dried, brought evenly in contact, and then passed between rollers, in order to condense and smoothe them together. This double cloth is afterwards suspended in a stove-room to dry, and to dispell the disagreeable odour of the naphtha.

Caoutchouc dissolves in the fixed oils, such as linseed oil, but the varnish has not the property of becoming concrete upon exposure to air.

It has been lately asserted that caoutchouc is soluble in the oils of lavender and sassafras. Roxburgh found it perfectly soluble in oil of cajeput.

It melts at 248° F., and stands afterwards a much higher heat without undergoing any further change. When the melted caoutchouc is exposed to the air, it becomes hard on the surface in the course of a year. When kindled it burns with a bright flame and a great deal of smoke.

Neither chlorine, sulphurous acid gas, muriatic acid gas, ammonia, nor fluosilicic acid gas, affect it, whence it forms very valuable flexible tubes for pneumatic chemistry. Cold sulphuric acid does not readily decompose it, nor does nitric acid, unless it be somewhat strong. The strongest caustic potash lye does not dissolve it even at a boiling heat.

Caoutchouc, according to the experiments of Dr. Ure, which have been confirmed by those of Dr. Faraday, contains no oxygen, as almost all other solid vegetable products do, but is a mere compound of carbon and hydrogen, in the proportion, by these results, of 90 carbon to 10 hydrogen, being three atoms of the former to two of the latter. Dr. Faraday obtained only 87·2 carbon. Dr. Ure observes, "from which I would infer that some of the carbon, which in this substance is difficult to acidify by peroxide of copper, had escaped its action. It is obvious that too little carbonic acid gas may be obtained, but certainly not more than corresponds to the carbon in the body. No carbon can be created in the process of ultimate analysis by pure peroxide of copper, such as I employed; and I repeated the ignition after attrition of the mixture used in the experiment." Melted caoutchouc forms a very excellent chemical lute, as it adheres very readily to glass vessels, and withstands the corrosive action of acid vapours. Caoutchouc is much used for effacing the traces of plumbago pencils, whence it derived the name of Indian-rubber. It has been employed very extensively for making elastic bands or braces. The caoutchouc bottles are skilfully cut into long spiral slips, which are stretched, and kept extended till nearly deprived of their elasticity, and till they form a thread of moderate fineness. This thread is put into a braid machine, and covered with a sheath of cotton, silk, linen, or worsted. The clothed caoutchouc is then laid as warp in a loom, and woven into an elegant riband. When woven, it is exposed upon a table to the action of a hot smoothing iron, which restoring to the caoutchouc all its primitive elasticity, the riband retracts considerably in length, and the braiding corrugates equally upon the caoutchouc cores. Such bands possess a remarkable elasticity, combined with any desired degree of softness. Sometimes cloth is made of these braided strands of caoutchouc used both as warp and as weft, which is therefore elastic in all directions. When a light fabric is required, the strands of caoutchouc, either naked or braided, are alternated with common warp yarns. For this mixed fabric a patent has been obtained. The original manufacturer of these elastic webs is a major in the Austrian service, who has erected a great factory for them at St. Denys, near Paris.

Mr. William Henry Barnard, in the course of some experiments upon the impregnation of ropes with caoutchouc, at the factory of Messrs. Enderby at Greenwich, discovered that when this substance was exposed to a heat of about 600° F. it resolved itself into a vapour, which, by proper refrigeratory methods, was condensable into a liquid possessing very remarkable properties, to which the name caoutchoucine has been given. For this invention "of a solvent not hitherto used in the arts," Mr. Barnard obtained a patent, in August, 1833. His process for preparing it is described in his specification as follows:—"I take a mass of the said caoutchouc, or Indian-rubber, as imported, and having cut it into small lumps, containing about two cubic inches each (which I prefer), I throw these lumps into a cast-iron still (which I find adapted for the purpose, and a diagram of which is annexed to, and forms part of this my specification), with a worm attached (*fig.* 398); A is the still, B the covet ground to a metallic fit, to admit of a thermometer to take the temperature; C the fire place, D the ash-pit, E the worm-tub and worm, F the brick-work of the still, G a

Digitized by Google

roller and carriage, in conjunction with a crane, or other means, to raise the cover to take out the residue, and to charge the same; H the chain.

"I then apply heat to the still in the usual manner, which heat is increased until the thermometer ranges at 600 degrees of Fahrenheit, or thereabouts. And, as the thermometer ranges progressively upwards to 600 degrees of Fahrenheit, a dark-coloured oil or liquid is distilled over, which I claim as my said invention, such liquid being a solvent of caoutchouc, and other resinous and oleaginous substances. When the thermometer reaches 600 degrees, or thereabouts, nothing is left in the still but dirt and charcoal.

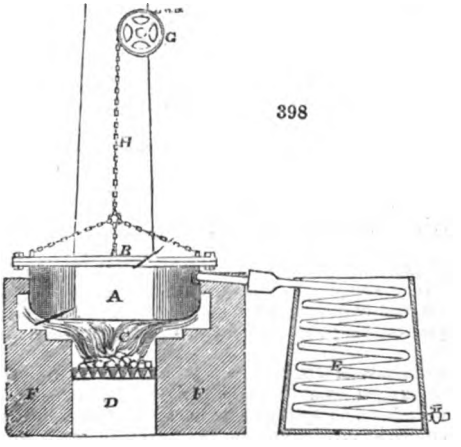

"I have found the operation of distillation to be facilitated by the addition of a portion of this oil, either previous or subsequent to rectification, as hereinafter mentioned, in the proportion of one-third of oil to two-thirds of caoutchouc.

"I afterwards subject the dark-coloured liquid thus distilled to the ordinary process of rectification, and thereby obtain fluids varying in specific gravity, of which the lightest hitherto has not been under 670, taking distilled water at 1000, which fluids I also claim as my said invention.

"At each rectification the colour of the liquid becomes more bright and transparent, until at the specific gravity of 0·680, or thereabouts, it is colourless and highly volatile.

"In the process of rectification (for the purpose of obtaining a larger product of the oil colourless) I put about one-third of water into the still. In each and every state the liquid is a solvent of caoutchouc, and several resinous and oleaginous substances, and also of other substances (such as copal), in combination with very strong alcohol.

"Having experienced much difficulty in removing the dirt which adheres to the bottom of the still, I throw into the still lead and tin in a state of alloy (commonly called solder), to the depth of about half an inch, and, as this becomes fused, the dirt which lies on the surface of it is more easily removed.

"Objections have been made to the smell of this liquid:—I have found such smell removed by mixing and shaking up the liquid with nitro-muriatic acid, or chlorine, in the proportion of a quarter of a pint of the acid (of the usual commercial strength) to a gallon of the liquid."

The discovery of the chemical solvent, which forms the subject of the patent above described, has excited considerable interest in the philosophical world, not only from its probable usefulness as a new article of commerce, but also from two very extraordinary characteristics which it is found to possess, viz., that, in a liquid state, it has less specific gravity than any other liquid then known to chemists, being considerably lighter than sulphuric ether, and, in a state of vapour, is heavier than the most ponderous of the gases.

Its elementary constituents are,

Carbon	- - 6·812	- -	8 proportions.
Hydrogen	- - 1·000	- -	7 ditto.

This new material (when mixed with alcohol) is a solvent of all the resins, and particularly of copal, which it dissolves without artificial heat, at the ordinary temperature of the atmosphere; a property possessed by no other solvent known; and hence it is peculiarly useful for making varnishes in general. It also mixes readily with oils, and will be found to be a valuable and cheap menstruum for liquefying oil-paints; and, without in the slightest degree affecting the most delicate colours, will, from its ready evaporation, cause the paint to dry almost instantly.

Cocoa-nut oil, at the common temperature of the atmosphere, always assumes a concrete form; but a portion of this caoutchoucine mixed with it will cause the oil to become fluid, and to retain sufficient fluidity to burn in a common lamp with extraordinary brilliancy.

Digitized by Google

Caoutchoucine is extremely volatile; and yet its vapour is so exceedingly heavy, that it may be poured, without the liquor, from one vessel into another like water. One of the real practical objections to caoutchoucine seemed to be its easy decomposition. Messrs. Enderby and Barnard found that, if exposed to air, and especially if a small quantity of water was present, that it very speedily decomposed, changing colour to deep brown or black. Specimens, however, remain perfectly clear and without change, in bottles, after twenty years.

Hitherto the greater part of the caoutchouc has been imported into Europe from South America, and the best from Para; but of late years a considerable quantity has been brought from Java, Penang, Singapore, Assam, and Africa. About twelve years ago, Mr. William Griffith published an interesting report upon the *Ficus elastica*, the caoutchouc tree of Assam, which he drew up at the request of Captain Jenkins, agent in that country to the Governor-General of India. This remarkable species of fig-tree is either solitary, or in twofold or threefold groups. It is larger and more umbrageous than any of the other trees in the extensive forest where it abounds, and may be distinguished from the other trees at a distance of several miles, by the picturesque appearance produced by its dense, huge, and lofty crown. The main trunk of one was carefully measured, and was found to have a circumference of no less than 74 feet; while the girth of the main trunk along with the supports immediately round it, was 120 feet. The area covered by the expanded branches had a circumference of 610 feet. The height of the central tree was 100 feet.

It has been estimated, after an accurate survey, that there are 43,240 such noble trees within a length of 30 miles and a breadth of 8 miles of forest, near Ferozepoor, in the district of Chardwar, in Assam.

Lieutenant Veitch has since discovered that the *Ficus elastica* is equally abundant in the district of Naudwar. Its geographical range in Assam seems to be between 25° 10′ and 27° 20′ of north latitude, and between 90° 40′ and 95° 30′ of east longitude. It occurs on the slopes of the hills up to an elevation of probably 22,500 feet. This tree is of the banyan tribe, famed for its pillared shade, "whose daughters grow about the mother tree," which has furnished the motto *tot rami, quot arbores*, to the Royal Asiatic Society. Species of this genus afford grateful shade, however, in the tropical regions of America, as well as Asia.

Many species of other trees yield a milky tenacious juice, of which birdlime has been frequently made; as *Artocarpus integrifolia* and *Lakoocha*, *Ficus indica* and *religiosa*, also *F. Tsiela Roxburghii*, *glomerata*, and *oppositifolia*. From some of these an inferior kind of caoutchouc has been obtained.

The juice of the *Ficus elastica* of Chardwar is better when drawn from the old than from the young trees, and richer in the cold season than in the hot. It is extracted by making incisions a foot apart, across the bark down to the wood, all round the trunk, and also the large branches, up to the very top of the tree; the quantity which exudes increasing with the height of the incision. The bleeding may be safely repeated once every fortnight. The fluid, as fresh drawn, is nearly of the consistence of cream, and pure white. Somewhat more than half a *maund* (42 lbs.) is reckoned to be the average produce of each bleeding of one tree; or 20,000 trees will yield about 12,000 maunds of juice; which is composed in 10 parts, of from 4 to 6 parts of water, and, of course, from 6 to 4 parts of caoutchouc. The bleeding should be confined to the cold months, so as not to interfere with or obstruct the vigorous vegetation of the tree in the hot months.

Mr. Griffith says, that the richest juice is obtained from transverse incisions made into the wood of the larger reflex roots, which are half exposed above ground, and that it proceeds from the bark alone. Beneath the line of incisions, the natives of Assam scoop out a hole in the earth, in which they place a leaf of the *Phrynium capitatum* (Linn.), rudely folded up into the shape of a cup. He observes that the various species of *Tetranthera*, upon which the *Moonga* silkworm feeds, as also the castor oil plant, which is the chief food of the Eria silkworm, do not afford a milky caoutchouc juice. Hence it would appear that Dr. Royle's notion of caoutchouc forming a necessary ingredient in the food of silkworms, and being "in some way employed in giving tenacity to their silk," seems to be unfounded. If Botany discountenances this idea, Chemistry would seem to scout it altogether; for silk contains 11·33 per cent. of azote, and caoutchouc contains none at all, being simply a solid hydro-carburet, and therefore widely dissimilar in constitution to silk, which consists of oxygen 34·04, azote 11·33, carbon 50·69, and hydrogen 3·94 in 100 parts.

This hydro-carburet emulsion is of common occurrence in the ORDERS *Euphorbiacea* and *Tulicea*, which may be looked on as the main sources of caoutchouc. The American caoutchouc is said to be furnished by the *Siphonia elastica*, or the *Hevea guianensis* of Aublet, a tree which grows in Brazil, and also in Surinam.

Dr. Royle sent models of cylinders of 1½ to 2½ inches in diameter, and 4 or 5 inches

Digitized by Google

in length, to both the Asiatic and Agricultural Societies of Bengal, to serve as patterns for the natives to mould their caoutchouc by. Mr. Griffith says that this plan of forming the caoutchouc into tumblers or bottles, as recommended by the committee of the London Joint-Stock Caoutchouc Company, is, in his opinion, the worst that can possibly be offered; being tedious, laborious, causing the caoutchouc to be blackened in the drying, and not obviating the viscidity of the juice when it is exposed to the sun. He recommends, as a far better mode of treating the juice, to work it up with the hands, to blanch it in water, and then subject it to pressure. Better methods have recently occurred while experimenting upon the caoutchouc juice. This fluid, with certain precautions, chiefly exclusion from air and much warmth, may be kept in the state of a creamy emulsion for a very long time. Mr. Hancock states, some barrels treated with ammonia arrived in England in the fluid state.

However plausible these observations may appear, the practical men wanted sheet rubber to cut into threads, &c., and Mr. Hancock states he had a cylinder made of masticated rubber, of a convenient size, and sent it to Para as a pattern for the natives, and great numbers of cylinders were soon after in the market, well made, of the quality desired, and called tubes. Such cylinders are still imported (1857).

Great interest was taken by Mr. Hancock to introduce the native juice into this country; and, after great expense, he had the disappointment of finding the barrels contained coagulated Indian-rubber and watery fluid. Some samples, by peculiar treatment, escaped; whatever might have been expected there seemed but little confidence in these plans, and valuable as the native juice might be at one time, yet by solvents and by working the rubber with machinery, it is far more profitable to employ this state, than to import a large quantity of watery fluid, with all the expenses of casks and cooperage, while the solid article is excellently adapted to take care of itself.

Sharp and clean casts were taken with this liquid, and as it is susceptible of being tinted with delicate colours, it might be used for beautiful ornamental purposes; when the solid rubber separates, it is white, but in small pieces or thin sheets, it is semi-transparent.

According to Dr. Faraday, the pure caoutchouc, obtained from the sap, had a specific gravity of 0·925, and no reduplication of it in a Bramah's press was found to effect permanent alteration.

Experimental Researches on Caoutchouc.

The specific gravity of the best compact *Para* caoutchouc, taken in dilute alcohol, is	-	-	0·941567
The specific gravity of the best Assam is	-	-	0·942972
" " Sincapore	-	-	0·936650
" " Penang	-	-	0·919178

Having been favoured by Mr. Sievier, formerly managing director of the Joint-Stock Caoutchouc Company, and by Mr. Beale, engineer, with two different samples of caoutchouc juice, Dr. Ure subjected each to chemical examination.

"That of Mr. Sievier is greyish brown, that of Mr. Beale is of a milky grey colour; the deviation from whiteness in each case being due to the presence of aloetic matter, which accompanies the caoutchouc in the secretion by the tree. The former juice is of the consistence of thin cream, has a specific gravity of 1·04125, and yields, by exposure upon a porcelain capsule, in a thin layer, for a few days, or by boiling for a few minutes with a little water, 20 per cent. of solid caoutchouc. The latter, though it has the consistence of pretty rich cream, has a specific gravity of only 1·0175. It yields no less than 37 per cent. of white, solid, and very elastic caoutchouc.

"It is interesting to observe how readily and compactly the separate little clots or threads of caoutchouc coalesce into one spongy mass in the progress of the ebullition, particularly if the emulsive mixture be stirred; but the addition of water is necessary to prevent the coagulated caoutchouc from sticking to the sides or bottom of the vessel and becoming burnt. In order to convert the spongy mass thus formed into good caoutchouc, nothing more is requisite than to expose it to moderate pressure between the folds of a towel. By this process the whole of the aloetic extract, and other vegetable matters, which concrete into the substance of the balls and junks of caoutchouc prepared in Assam and Java, and contaminate it, are entirely separated, and an article nearly white and inodorous is obtained. Some of the cakes of American caoutchouc when cut exhale the fœtor of rotten cheese; a smell which adheres to the threads made of it after every process of purification.

"In the interior of many of the balls which come from both the Brazils and East Indies, spots are frequently found of a viscid tarry-looking matter, which, when exposed to the air, act in some manner as a ferment, and decompose the whole mass into

Digitized by Google

a soft substance, which is good for nothing. Were the plan of boiling the fresh juice along with its own bulk of water, or a little more, adopted, a much purer article would be obtained, and with incomparably less trouble and delay, than has been hitherto brought into the market.

"I find that neither of the above two samples of caoutchouc juice affords any appearance of coagulum when mixed in any proportions with alcohol of 0·825 specific gravity; and, therefore, I infer that albumen is not a necessary constituent of the juice, as Dr. Faraday inferred from his experiments published in the 21st vol. of the Journal of the Royal Institution.

"The odour of Mr. Sievier's sample is slightly acescent, that of Mr. Beale's, which is by far the richer and purer, has no disagreeable smell whatever. The taste of the latter is at first bland and very slight, but eventually very bitter, from the aloetic impression upon the tongue. The taste of the former is bitter from the first, in consequence of the great excess of aloes which it contains. When the brown solution, which remains in the capsule after the caoutchouc has been separated in a spongy state by ebullition from 100 grains of the richer juice, is passed through a filter and evaporated, it leaves 4 grains of concrete aloes.

"Both of these emulsive juices mix readily with water, alcohol, and pyroxylic spirit, though they do not become at all clearer; they will not mix with *caoutchoucine* (the distilled spirit of caoutchouc), or with petroleum-naphtha, but remain at the bottom of these liquids as distinct as mercury does from water. Soda caustic lye does not dissolve the juice; nitric acid (double aquafortis) converts it into a red curdy magma. The filtered aloetic liquid is not affected by the nitrates of baryta and silver; it affords with oxalate of ammonia minute traces of lime."

The best solvent is a mixture of 100 parts of sulphuret of carbon with from 6 to 8 parts of anhydrous alcohol. If the alcohol be mixed with a little water a dough is obtained, from which the caoutchouc may be drawn out into threads and spun. By Gerard's process, gutta percha is also soluble in the above mixtures of sulphuret of carbon and alcohol.

The sulphuration of caoutchouc, a valuable invention, is due to Mr. Charles Goodyear of New York.

I. Caoutchouc Manufactures.

But before entering upon these special divisions we may advert to some of the steps that have created this new employment for capital, commerce, and skill, especially as Mr. Hancock conceives it but just to the memory of the late Mr. Macintosh, to record the circumstances which led to his invention of the "Waterproof double textures," that have been so long celebrated through the world by the name of "Macintoshes."

It will be recollected that on the introduction of coal gas, the difficulties were very great to purify it from matters that gave a most disagreeable odour to the gas and gas apparatus; the nuisance of these products led to many inconveniences. Mr. Macintosh, then employed in the manufacture of cudbear, in 1819 entered into arrangements with the Glasgow Gas Works to receive the tar and ammoniacal products. After the separation of water, ammonia and pitch, the essential oil termed naphtha was produced, and it occurred to him that it might be made of use as a solvent for Indian-rubber, and by the quality and quantities of the volatile naphtha, he could soften and dissolve the Indian-rubber; after repeated experiments to obtain the mixtures of due consistency, Mr. Macintosh, in 1823, obtained a patent for waterproof processes, and established a manufactory of articles at Glasgow, and eventually, with partners, entered upon the extended scale of business at Manchester, now so well known as the firm of Charles Macintosh and Co.

The action of many solvents of Indian-rubber is first to soften and then to form a sort of gelatinous compound with Indian-rubber, requiring mechanical action to break the bulk so as to get complete solution, when the original bulk is increased twenty or thirty times to form a mass: it may be imagined that in the early trials much time was occupied, and manual labour, to break up the soft coherent mass, &c., while hand-labour, sieves, the painter's slab and muller, and other simple means were resorted to.

Macintosh, Hancock, and Goodyear alike record the simple manipulations they first employed, and the impression produced at the last, when they compare their personal efforts with the gigantic machinery to effect the same results.

Mr. T. Hancock's first patent was in April 1820: "For an improvement in the application of a certain material to various articles of dress and other articles, that the same may be rendered elastic." Thus, to wrists of gloves, to pockets, to prevent their being picked, to waistcoats, riding-belts, boots and shoes without tying and lacing, the public had their attention directed. To get the proper turpentine to facilitate solution, and remedy defects of these small articles, and to meet the difficulties of practice and failures, Mr. Hancock gave constant zeal, and pursued the subject until,

Digitized by Google

united with the firm of C. Macintosh and Co., he has been constantly before the world, and produced one of the most important manufactures known.

To get two clean pieces to unite together at their recently cut surfaces, to obtain facile adhesion by the use of hot water, to cut the Indian rubber by the use of a wet blade, to collect the refuse pieces, to make them up into blocks, and then cut the blocks into slices, were stages of the trade which required patience, years of time, and machinery to effect with satisfaction to the manufacturer.

To operate upon the impure rubber was a matter of absolute necessity for economic reasons: the bottles made by the natives were the purest form, but larger quantities of rubber could be cheaply obtained, full of dirt, stones, wood, leaves and earth. To facilitate the labour of cutting or dividing, Mr. Hancock resorted to a tearing action, and constructed a simple machine for the purpose. (See *fig.* 399.) A shows the en-

399

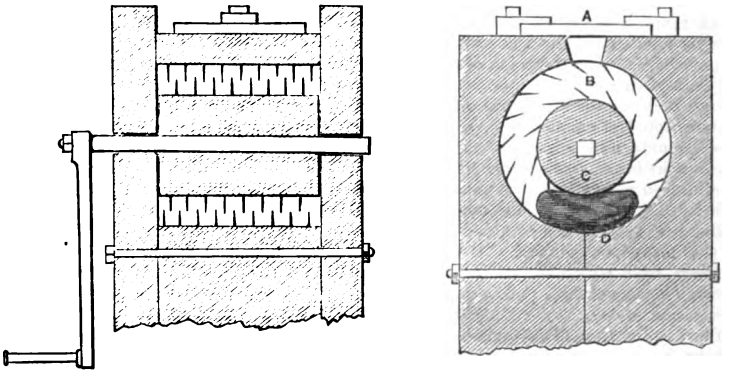

trance for pieces of rubber; B, interior of fixed cylinder, with teeth; C, cylinder to revolve, with teeth or knives; D, the resulting ball of rubber.

This machine had the effect of tearing the Indian-rubber into shreds and small fragments by the revolution of a toothed roller; the caoutchouc yielded, became hot, and ultimately a pasty mass or ball resulted; when cooled and cut it appeared homogeneous. Waste cuttings put, in the first instance, on the roller, were dragged in, and there was evidence of action of some kind taking place; the machine was stopped, the pieces were found cohering together into a mass, this being cut showed a mottled grain, but being replaced and subjected to the revolving teeth of the rollers, it became very hot; and was found to be uniformly smooth in texture when cooled and cut open.

The first charge was about 2 ounces of rubber, and required about the power of a man to work it. The next machine soon formed a soft solid, with speed and power, from all kinds of scraps of Indian-rubber, cuttings of bottles, lumps, shoes, &c., a charge of one pound gave a smooth uniform cylindrical lump of about 7 inches in length and 1 inch in diameter. This process, including the use of heated iron rollers, was long kept secret; it is known as the masticating process now, and the machines are called "Masticators." In the works at Manchester the charges now are 180lbs. to 200lbs. of Indian-rubber each, and they produce single blocks 6 feet long, 12 or 13 inches wide, and 7 inches thick, by steam-power. The Mammoth machine of Mr. Chauffée, in the United States, weighs about 30 tons, and appears to have been invented about 1837, and is a valuable machine, differing in construction from Hancock's masticators, but answers well in many respects; it may be considered as the foundation of the American trade.

In 1820 the blocks were cut into forms of square pieces sold by the stationers to rub out pencil marks, and then thin sheets for a variety of purposes. A cubical block cut by a keen sharp blade constantly wet, gave a sheet of Indian-rubber, the block raised by screws and the knife guided, enabled sheets of any thickness to be cut, sometimes so even and thin, as to be semi-transparent; when warm the sheets could be joined edge to edge, and thus large sheets be produced: from these blocks, rollers of solid rubber could be made, cylinders were covered for machinery, billiard tables had evenly cut pieces adjusted, tubes and vessels for chemical use were employed, and constantly increasing trials were made of the masticated rubber.

These remarks upon the early and successful manufacturers will better enable the outline of improvements to be followed: it can readily be imagined that when capital

Digitized by Google

and interest combine with the changing requirements of the public, that it would demand more space than a volume would afford to give the insights into trade applications, still guarded with secret means to produce success. But the foregoing remarks may lead to the appreciation of many of the following arrangements.

The department of operative industry which embraces caoutchouc manufactures has, within a few years, acquired an importance equal to that of some of the older arts, and promises, ere long, to rival even the ancient textile fabrics in the variety of its designs and applications. The manufacture of caoutchouc has, at present, these principal branches:—1. The condensation of the crude lumps or shreds of caoutchouc, as imported from South America, India, &c., into compact homogeneous blocks, and the cutting of these blocks into cakes or sheets for the stationer, surgeon, shoemaker, &c. 2. The filature of either the Indian-rubber bottles, or the artificial sheet caoutchouc, into tapes and threads of any requisite length and fineness, which, being clothed with silk, cotton, linen, or woollen yarns, form the basis of elastic tissues of every kind. 3. The conversion of the refuse cuttings and coarser qualities of caoutchouc into a viscid varnish, which, being applied between two surfaces of cloth, constitutes the well-known double fabrics, impervious to water and air; and by special applications to one surface, to constitute the single texture fabrics. 4. The vulcanisation of Indian-rubber. 5. The mechanical applications resulting from the changed Indian-rubber. 6. The solarisation of caoutchouc. 7. Trade applications of caoutchouc.

The caoutchouc, as imported in skinny shreds, fibrous balls, twisted concretions, cheese-like cakes, and irregular masses, is, more or less, impure, and sometimes fraudulently interstratified with earthy matter. It is cleansed by being cut into small pieces, and washed in warm water. It is now dried on iron trays, heated with steam, while being carefully stirred about to separate any remaining dirt, and is then passed through, between a pair of iron rolls, under a stream of water, whereby it gets a second washing, and becomes at the same time equalised by the separate pieces being blended together. The shreds and cuttings thus laminated, if still foul or heterogeneous, are thrown back into a kind of hopper over the rolls, set one-sixteenth of an inch apart, and passed several times through between them. The above method of preparation is that practised by Messrs. Keene and Co., of Lambeth, now Thomas Wheeler and Co, of Leicester, in their excellent manufactory, under a patent granted in October, 1836, to Mr. Christopher Nickels, a partner in the firm.

In the great establishment of the Joint-Stock Caoutchouc Company, now the property of William Warne and Company, at Tottenham, originally under the direction of Mr. Sievier, a gentleman distinguished no less by his genius and taste as a sculptor, than by his constructive talents, the preparatory rinsing and lamination are superseded by a process of washing practised in Mr. Nickels's second operation, commonly called the *grinding*, or, as it should more properly be styled, the *kneading*. The mill employed for agglutinating or incorporating the separate fragments and shreds of caoutchouc into homogeneous elastic ball, is a cylindrical box or drum of cast iron, 8 or 9 inches in diameter, set on its side, and traversed in the line of its horizontal axis (also 8 or 9 inches long) by a shaft of wrought iron, furnished with 3 rows of projecting bars, or kneading arms, placed at angles of 120 deg. to each other. These act by rotation against 5 chisel-shaped teeth, which stand obliquely up from the front part of the bottom of the drum. The drum itself consists of 2 semi-cylinders; the under one of which is made fast to a strong iron framing, and the upper one is hinged to the under one behind, but bolted to it before, so as to form a cover or lid, which may be opened or laid back at pleasure, in order to examine the caoutchouc from time to time, and take it out when fully kneaded. In the centre of the lid a funnel is made fast, by which the cuttings and shreds of the Indian-rubber are introduced, and a stream of water is made to trickle in, for washing away the foul matter often imbedded in it. The power required to turn the axis of one of these mills, as the drums or boxes are called, may be judged of from the fact, that if it be only 2 inches in diameter, it is readily twisted asunder, and requires to be 3 inches to withstand every strain produced by the fixed teeth holding the caoutchouc against the revolving arms. Five pounds constitute a charge of the material. Mills vary in size, and charges range from 7 to 14 lbs.

One of the most remarkable phenomena of the kneading operation, is the prodigious heat disengaged in the alternate condensation and expansion of the caoutchouc. Though the water be cold as it trickles in, it soon becomes boiling hot, and emits copious vapours. When no water is admitted, the temperature rises much higher, so that the elastic lump, though a bad conductor of heat, cannot be safely touched with the hand. As we shall presently find that caoutchouc suffers no considerable or permanent diminution of its volume by the greatest pressure which can be applied, we

Digitized by Google

must ascribe the heat evolved in the kneading process to the violent intestine movements excited throughout all the particles of the elastic mass.

During the steaming much muddy water runs off through apertures in the bottom of the drum. In the course of half an hour's trituration the various pieces become agglutinated into a soft, elastic, ovoid ball, of a reddish brown colour. This ball is now transferred into another similar iron drum, where it is exposed to the pricking and kneading action of 3 sets of chisel points, 5 in each set, that project from the revolving shaft at angles of 120 deg. to each other, and which encounter the resistance occasioned by five stationary chisel teeth, standing obliquely upwards from the bottom of the drum. Here the caoutchouc is kneaded dry along with a little quicklime. It soon gets very hot; discharges in steam through the punctures, the water and air which it had imbibed in the preceding washing operation; becomes in consequence more compact; and in about an hour assumes the dark brown colour of stationers' rubber. During all this time frequent explosions take place, from the expansion and sudden extrication of the imprisoned air and steam.

Instead of close boxes and tearing teeth or knives, rollers of iron are now employed (1858), their forms are corrugated, cut or indented, the pieces of Indian-rubber are thrown between, and by heat and pressure are cleansed and incorporated; streams of water, warm or cold, regulate these operations at will, of course with large rollers of metal exposed to air and streams of water; the temperature is now found to be kept so low that the previous statement may appear exaggerated to those who now work with more power but with less velocity. Mr. Hancock, however, says, "the heat it acquires is very surprising; I have since found in cutting a heavy charge open, and closing it upon the bulb of a thermometer, that the temperature reached 280°;" this heat was only due to motion of the machine and friction upon the rubber, as the materials and the machine were cold at the outset of the experiment tried with one of the early machines.

From the second set of drums the ball is transferred into a third set, whose revolving shaft being furnished both with flat pressing bars, and parallel sharp chisels, perpendicular to it, exercises the twofold operation of pricking and kneading the mass, so as to condense the caoutchouc into a homogeneous solid. Seven of these finished balls, weighing, as above stated, 5 pounds each, are then introduced into a much larger iron drum of similar construction, but of much greater strength, whose shaft is studded all round with a formidable array of blunt chisels. Here the separate balls become perfectly incorporated into one mass, free from honeycomb cells or pores, and therefore fit for being squeezed into a rectangular or cylindrical form in a suitable cast-iron mould, by the action of a screw-press. When condensed to the utmost in this box, the lid is secured in its place by screw bolts, and the mould is set aside for several days. It is a curious fact, that Mr. Sievier tried to use this as a moulding force, by the hydraulic press, without effect, as the cake of caoutchouc, after being so condensed, resiles much more considerably than after the compressing action of the screw. The cake form generally preferred for the recomposed, ground, or milled caoutchouc, is a rectangular mass, about 18 inches long, 9 inches broad, and 5 inches thick.

This is sliced into cakes for the stationer, and into sheets for making tapes and threads of caoutchouc, by an ingenious self-acting machine, in which a straight steel blade, with its edge slanting downwards, is made to vibrate most rapidly to and fro in a horizontal plane; while the cake of caoutchouc clamped or embraced at each side between two strong iron bars, is slowly advanced against the blade by screw-work, like that of the slide-rest of a lathe. In cutting caoutchouc by knives of every form, it is essential that either the blade or the incision be constantly moistened with water; for otherwise the tool would immediately stick fast. As the above straight vibrating knife slants obliquely downwards, the sheet which it cuts off spontaneously turns up over the blade in proportion as it is detached from the bottom mass of the cake. The thicker slices are afterwards cut by hand, with a wetted knife, into small parallelopipeds for the stationer, the sections being guided rectangularly by saw lines in a wooden frame. Slices may be cut off to almost any desired degree of thinness, by means of an adjusting screw — a mechanism that acts against a board which supports the bottom of the cake, and raises it by any aliquot part of an inch, the cutting blade being caused to vibrate always in the same horizontal plane. These thin slices constitute what is called sheet caoutchouc, and they serve tolerably for making tubes for pneumatic apparatus, and sheaths of every kind; since, if their two edges be cut obliquely with clean scissors, they may be made to coalesce, by gentle pressure, so intimately, that the line of junction cannot be discovered either by the eye, or by inflation of a bag or tube thus formed.

The mode of recomposing the cuttings, shreds, and coarse lumps of caoutchouc into a homogeneous elastic cake, specified by Mr. Nickels, for his patent, sealed October 24, 1836, is not essentially different from that above described. The cylinders of his mill

Digitized by Google

are more capacious, are open at the sides like a cage, and do not require the washing apparatus, as the caoutchouc has been cleansed by previous lamination and rinsing. He completes the kneading operation, in this open cylinder, within the space of about two hours, and afterwards squeezes the large ball so formed into the cheese form, in a mould subjected to the action of an hydraulic press. As he succeeds perfectly in making compact cakes in this way, his caoutchouc must differ somewhat in its physical constitution from that recomposed by Mr. Sievier's process. He uses a press of the power of 70 tons; such pressure, however, must not be applied suddenly, but progressively, at intervals of two or three minutes between each stroke; and when the pressing is complete, he suffers the caoutchouc to remain under pressure till it is cold, when he thrusts it out of the mould entirely, or, placing his mould in the slide-rest mechanism, he gradually raises the caoutchouc out of it, while the vibrating knife cuts it into slices in the manner already described. The elegant machine by which these sheets are now so easily and accurately sliced, was originally contrived and constructed by Mr. Beale, engineer, Church-lane, Whitechapel.

II. Filature of Caoutchouc for Making Elastic Fabrics.

The following particulars may be deemed as belonging to the history of the manufacture of threads of native rubber,—the cured, or vulcanised, or mineralised rubber having quite superseded the modes of preparing threads from native bottle caoutchouc.

Messrs. Rattier and Guibal mounted in their factory at St. Denys, Dr. Ure says, in the year 1826 or 1827, a machine for cutting a disc of caoutchouc into a continuous fillet spirally, from its circumference towards its centre. This flat disc was made by pressing the bottom part of a bottle of Indian-rubber in an iron mould. A machine on the same principle was made the subject of a patent by Mr. Joshua Proctor Westhead, of Manchester, in February 1846; and, being constructed with the well-known precision of Manchester workmanship, it has been found to act perfectly well in cutting a disc of caoutchouc, from the circumference towards the centre spirally, into one continuous length of tape. For the service of this machine, the bottom of a bottle of Indian-rubber of good quality being selected, is cut off and flattened by heat and pressure into a nearly round cake of uniform thickness. This cake is made fast at its centre by a screw nut and washer to the end of a horizontal shaft, which may be made to revolve with any desired velocity by means of appropriate pulleys and bands, at the same time that the edge of the disc of caoutchouc is acted on by a circular knife of cast steel, made to revolve 3000 times per minute, in a plane at right angles to that of the disc, and to advance upon its axis progressively, so as to pare off a continuous uniform tape or fillet from the circumference of the cake. During this cutting operation, the knife and caoutchouc are kept constantly moist with a slender stream of water. A succession of threads of any desired fineness is afterwards cut out of this fillet, by drawing it in a moist state through a guide slit, against the sharp edge of a revolving steel disc. This operation is dexterously performed by the hands of young girls. MM. Rattier and Guibal employed, at the above-mentioned period, a mechanism consisting of a series of circular steel knives, fixed parallel to each other at minute distances, regulated by interposed washers upon a revolving shaft; which series of knives acted against another similar series, placed upon a parallel adjoining shaft, with the effect of cutting the tape throughout its length into eight or more threads at once. An improved modification of that apparatus is described and figured in the specification of Mr. Nickels's patent of October, 1836. He employs it for cutting into threads the tapes made from the recomposed caoutchouc.

The body of the bottle of Indian-rubber, and in general any hollow cylinder of caoutchouc, is cut into tapes, by being first forced upon a mandril of soft wood of such dimensions as to keep it equally distended. This mandril is then secured to the shaft of a lathe, which has one end formed into a fine threaded screw, that works in a fixed nut, so as to traverse from right to left by its rotation. A circular disc of steel, kept moist, revolves upon a shaft parallel to the preceding, at such a distance from it as to cut through the caoutchouc, so that, by the traverse movement of the mandril shaft, the hollow cylinder is cut spirally into a continuous fillet of a breadth equal to the thickness of the side of the cylinder. Mr. Nickels has described two methods of forming hollow cylinders of recomposed caoutchouc, for the purpose of being cut into fillets by such a machine.

It is probable that the threads formed from the best Indian-rubber bottles, as imported from Para, are considerably stronger than those made from recomposed caoutchouc, and therefore much better adapted for making Mr. Sievier's patent elastic cordage, When, however, the kneading operation has been skilfully performed, it is found that threads of the *ground* caoutchouc, as it is incorrectly called by

Digitized by Google

the workmen, answer well for every ordinary purpose of elastic fabrics, and are, of course, greatly more economical, from the much lower price of the material.

The following *figs.* 400, 401, 402, represent the machine for cutting the spiral riband. The disc D, placed horizontally, turns round its vertical axis, so as to present

400

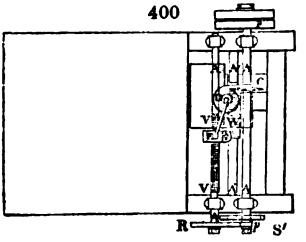

401

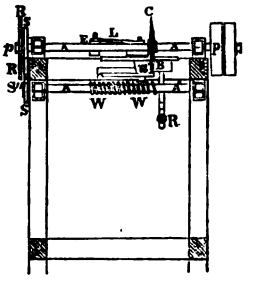

402

its periphery to the edge of a knife C, formed like a circular blade, whose plane is perpendicular to that of the bases of the disc. It is obvious, that if the disc alone revolved, the motionless knife could act only by pressure, and would meet with an enormous resistance. A third movement becomes necessary. In proportion as the disc is diminished by the removal of the spiral band, the centre of this disc must advance upon the knife in order that the riband may have always the same breadth. The inspection of *fig.* 402, will make the accordance of the three motions intelligible. The knife C is placed upon a shaft or axis A, which carries a pulley, round which a belt or cord runs which drives the whole machine.

The shelf A bears a pinion *p*, which takes into a wheel R, placed upon the shaft A′; upon which there is cut a worm or endless screw, V, V. This worm bears a nut E, which advances as the screw turns, and carries with it a tie L, which in its turn pushes the disc D, carried upon a shoulder, constantly towards the knife. This shoulder is guided by two ears which slide in two grooves cut in the thickness of the table. The diameter of the pinion *p* is about one fifth of that of the wheel R; so that the arbour A turns five times less quickly than the arbour A′; and the fineness of the screw V contributes further to slacken the movement of translation of the disc.

The rotatory movement of the disc and its shoulder, is given by an endless screw W, W, which governs a pinion *p*, provided with ten teeth, and carried by the shaft A, upon which the shoulder is mounted. The arbour A′ of this endless screw receives its motion from the first shaft A, by means of the wheels S and S′ mounted upon these shafts and of an intermediate wheel S″. This wheel, of a diameter equal to that of the shaft A″, is intended merely to allow this shaft to recede from the shaft A. The diameter of the wheel of this last shaft is to that of the two others in the ratio of 10 to 8.

Second machine for subdividing the ribands. Figs. 403, 404.—The riband is engaged

403

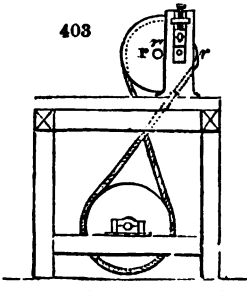

404

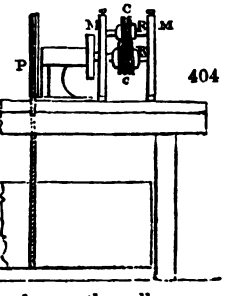

between the circular knives C, C, which are mounted upon the rollers R, R; thin brass washers keep these knives apart at a distance which may be varied, and two extreme washers mounted with screws on each roller maintain the whole system. The axes of these rollers traverse two uprights M, M, furnished with brasses, and with adjusting screws to approximate them at pleasure. The axis of the lower roller carries a wheel *r*, which takes into another smaller wheel *r′*, placed upon the same shaft as the pulley P, which is driven by a cord. The diameter of the wheel *r* is three times greater than

Digitized by Google

the wheel r'. The pulley P is twice the size of the wheel r'; and its cord passes round a drum B, which drives the rest of the machine.

Threads of caoutchouc are readily pieced by paring the broken ends obliquely with scissors, and then pressing them together with clean fingers, taking care to admit no grease or moisture within the junction line. These threads must be deprived of their elasticity before they can be made subservient to any torsile or textile manufacture. Each thread is *inelasticated* individually in the act of reeling, by the tenter boy or girl pressing it between the moist thumb and finger, so as to stretch it to at least eight times its natural length, while it is drawn rapidly through between them by the rotation of the power-driven reel. This extension is accompanied with condensation of the caoutchouc, and with very considerable disengagement of heat, as pointed out in Nicholson's Journal upwards of 30 years ago, by Mr. Gough, the blind philosopher of Kendal. To stretch the thread, in the act of reeling, the sensation of heat is too painful for unseasoned fingers. The reels, after being completely filled with the thread, are laid aside for some days, more or fewer, according to the quality of the caoutchouc, the recomposed requiring a longer period than the bottle material. When thus rendered inelastic, it is wound off upon bobbins of various sizes, adapted to various sizes of braiding, or other machines, where it is to be clothed with cotton or other yarn.

In the process of making the ELASTIC TISSUES, the threads of caoutchouc, being first of all deprived of their elasticity, are prepared for receiving a sheath upon the braiding machine. For this purpose they are stretched by hand, in the act of winding upon the reel, to 7 or 8 times their natural length, and left two or three weeks in that state of tension upon the reels. Thread thus *inelasticated* has a specific gravity of no less than 0·948732; but when it has its elasticity restored, and its length reduced to its pristine state, by rubbing between the warm palms of the hands, the specific gravity of the same piece of thread is reduced to 0·925939. This phenomenon is akin to that exhibited in the process of wire-drawing, where the iron or brass gets condensed, hard, and brittle, while it disengages much heat; which the caoutchouc thread also does in a degree intolerable to unpractised fingers, as above mentioned.

The thread of the Joint-Stock Caoutchouc Company is numbered from 1 to 8. No. 1. is the finest, and has about 5000 yards in a pound weight; No. 4, has 2000 in the pound weight; and No. 8, 700, being a very powerful thread. The finest is used for the finer elastic tissues, as for ladies' gold and silver elastic bracelets and bands. The Company produced threads that had 13,000 yards to the pound weight. The ropes made by Mr. Sievier with the strongest of the above threads, clothed with hemp and worked in his gigantic braiding machine, possess, after they are re-elasticated by heat, an extraordinary strength and elasticity; and, from the nearly rectilinear direction of all the strands, can stand, it is said, double the strain of the best patent cordage of like diameter. Sievier's patent elastic cordage is now disused.

In the manufacture of elastic fabrics, the riband looms at Holloway display to great advantage the mechanical genius of the patentee, Mr. Sievier. Their productive powers may be inferred from the following statement:—"5000 yards of 1-inch braces are woven weekly in one 18-riband loom, whereby the female operative, who has nothing to do but watch its automatic movements, earns 10*s*. a-week; 3000 yards of 2-inch braces are woven upon a similar loom in the same time." But one of Mr. Sievier's most curious patent inventions is that of producing, by the shrinking of the caoutchouc threads in the foundation or warp of the stuff, the appearance of raised figures, closely resembling coach-lace, in the weft. Thus, by a simple physical operation, there is produced, at an expense of one penny, an effect which could not be effected by mechanical means for less than one shilling. This manufacture is not carried on in that locality now, but in London and Leicester.

III. OF THE WATER-PROOF DOUBLE FABRICS.

The following description, however correct at the time, as applied to all Macintosh fabrics, is only of value as a record, before the public demand for single textures, and the discovery of changed Indian-rubber for articles of dress, gave the manufacture its present character.

The parings, the waste of the kneading operations above described, and the coarsest qualities of imported caoutchouc, such as the inelastic lumps from Para, are worked up into varnish, wherewith two surfaces of cloth are cemented, so as to form a compound fabric impervious to air and water. The caoutchouc is dissolved either in petroleum (coal-tar), naphtha, or oil of turpentine, by being triturated with either of the solvents in a close cast-iron vessel, with a stirring apparatus, moved by mechanical power. The heat generated during the attrition of the caoutchouc, is sufficient to favour the solution, without the application of fuel in any way. These triturating

Digitized by Google

cylinders have been called pug-mills by the workmen, because they are furnished with obliquely pressing and revolving arms, but in other respects they differ in construction. They are 4 feet in diameter and depth, receive 13 cwt. at a time, have a vertical revolving shaft of wrought iron 4 inches in diameter, and make one turn in a second. Three days are required to complete the solution of one charge of the varnish materials. The proportion of the solvent oils varies with the object in view, being always much more in weight than the caoutchouc.

When the varnish is to be applied to very nice purposes, as bookbinding, &c., it must be rubbed into a homogeneous smooth paste, by putting it in a hopper, and letting it fall between a couple of parallel iron rolls, set almost in contact.

The wooden frame-work of the gallery in which the water-proof cloth is manufactured, should be at least 50 yards long, to give ample room for extending, airing, and drying the pieces; it should be 2 yards wide, and not less than 5 high. It is formed of upright standards of wood, bound with three or four horizontal rails at the sides of the ends. At the end of the gallery, where the varnish is applied, the web which is to be smeared must be wound upon a beam, resembling in size and situation the cloth beam of the weaver's loom. This piece is thence drawn up and stretched in a horizontal direction over a bar, like the breast beam of a loom, whence it is extended in a somewhat slanting direction downwards, and passed over the edge of a horizontal bar. Above this bar, and parallel to it, a steel-armed edge of wood is adjusted, so closely as to leave but a narrow slit for the passage of the varnish and the cloth. This horizontal slit may be widened or narrowed at pleasure by thumb-screws, which lower or raise the movable upper board. The caoutchouc paste being plastered thickly with a long spatula of wood upon the down-sloped part of the web, which lies between the breast-beam and the above described slit, the cloth is then drawn through the slit by means of cords in a horizontal direction along the lowest rails of the gallery, whereby it gets uniformly besmeared. As soon as the whole web, consisting of about 40 yards, is thus coated with a viscid varnish, it is extended horizontally upon rollers, in the upper part of the gallery, and left for a day or two to dry. A second and third coat are then applied in succession. Two such webs, or pieces, are next cemented face to face, by passing them, at the instant of their being brought into contact, through, or between a pair of wooden rollers, care being taken by the operator to prevent the formation of any creases, or twisting of the twofold web. The under one of the two pieces being intended for the lining, should be a couple of inches broader than the upper one, to insure the uniform covering of the latter, which is destined to form the outside of the garment. The double cloth is finally suspended in a well-ventilated stove-room, till it becomes dry, and nearly free from smell. The parings cut from the broader edges of the under piece, are reserved for cementing the seams of cloaks and other articles of dress. The tape-like shreds of the double cloth are in great request among gardeners, for nailing up the twigs of wall shrubs.

In 1837, Mr. Hancock obtained a patent to produce cloth waterproof with greatly reduced quantities of dissolved caoutchouc, and in some cases without any solvent at all. The masticated rubber, rolled into sheets, was moistened on both sides with solvent and rolled up. The following day these were submitted to rollers of different speeds, and the whole became a plastic mass. Instead of a wooden plank as the bed of the machine, a revolving iron cylinder was used, kept hot by steam or water, and the coated cloth passed over flat iron chambers, heated the same way, to evaporate the small quantity of solvent. Masticated rubber has been spread without any solvent by these machines; but the spreading is best effected by the rubber being in some degree softened by the addition of small quantities of the solvent.

Sheets of rubber have been prepared by saturating the cloth with gum, starch, glue, &c., then rubber dough was placed on this smoothed surface; sufficient coatings of the rubber were spread to make up the desired thickness, the cloth was immersed in warm water to dissolve the gum, when the sheet of rubber came off with ease, and the plastic, or dough state, was the precursor of vulcanisation experiments and success.

The clamminess of caoutchouc is removed by Mr. Hancock in the following manner: 10 pounds of it are rolled out into a thin sheet between iron cylinders, and at the same time 20 pounds of French-chalk (silicate of magnesia) are sifted on and incorporated with it, by means of the usual kneading apparatus. When very thin films are required (like sheets of paper), the caoutchouc, made plastic with a little naphtha, is spread upon cloth previously saturated with size, and when dry is stripped off. Mixtures of caoutchouc so softened may be made with asphalt, with pigments of various kinds, plumbago, sulphur, &c.

The first form of bags or pillows, or ordinary air-cushions, is well-known, and manufactured by C. Macintosh and Co. as early as 1825 and 1826; when pressure is applied they yield for the instant to the compressing body, and then become rigid, and the whole strain is borne by the inelastic material of the bag, which then re-

Digitized by Google

sistingly bears the strain. Mr. T. Hancock once tried an ordinary pillow between boards in a hydraulic press, and records that it bore a pressure of 7 tons before it burst. To remedy the evils of this form an ingenious arrangement was made of inserting slips of Indian-rubber into the fabric, so that it expanded in every direction. This yielding of the case, and divisions into strengthened partitions, enabled seats, beds, and other applications to be made. Particular details will be found in Hancock's patent for 1835.

The gas bags now so commonly used appear, by Mr. Hancock's statement, to be made for experimental purposes in the year 1826; and in May 1826, at the suggestion and for the use of Lieut. Drummond, they were employed in the Trigonometrical Survey, with the oxy-hydrogen jets of gas on balls of lime.

They were made strong and of rough materials—fustian made air-proof with thin sheet rubber. Mr. Hancock, to try whether the rubber was absolutely impervious to water, had a bag made and weighed it during 30 years; the decrease of weight is shown:—

			lb.	oz.	drch.
Oct. 21st	1826	weight - - - -	1	1	4
Oct. 25th	1827	„ - - - - -	1	1	2
Oct. 2nd	1835	„ - - - - -	1	0	0
Nov.	1844	„ - - - - -	0	14	12
Oct.	1849	„ - - - - -	0	13	4
Feb.	1851	„ - - - - -	0	7	8
May	1854	„ - - - - -	0	3	14
In 1856 it was cut open and weighed - -			0	3	12

It was quite dry. Thus 12 oz. of water had evaporated or escaped in a quarter of a century, and 13 oz. 8 dr. in 30 years of observation.

He remarks that bags of such cloth made with a thin coating of rubber, soon evaporated sufficient water to cause mildew, when laid upon each other; but this slow evaporation does not interfere with their ordinary applications.

The porosity of caoutchouc explains the readiness with which it is permeated by different liquids which have no chemical action upon it. Thin sections of dry caoutchouc of the best kinds absorb from 18 to 26 per cent. of water in the course of a month, and become white from having been brown.

To enumerate the applications of these double fabrics for cushions, life preservers, beds and boats, would be out of place here, however important and ingenious the plans. Thus, instead of one bag, several tubes or compartments gave the required form, and this again may be divided into cells, very small, and kept apart by wool or hair; of the advantage of this plan to divide the air spaces there can be no doubt.

For single texture fabrics, or cloth with one side only prepared, the process is the same as that described for double fabrics, only that one side is proofed, or covered with Indian-rubber solution or paste; and this kind of waterproof has an advantage over the old, that the surface worn outside, being non-absorbent, imbibes no moisture and requires no drying after rain or wear. The objection to single texture fabrics, of being liable to decomposition by the heat of the sun and from close packing, has been obviated by a discovery adopted by Messrs. Warne and Co., termed by them the Sincalor process (*sine calore*, without heat); by which the properties of the rubber are so changed that heat, grease, naphtha, and perspiration, which decomposes the ordinary Indian-rubber waterproof, in no way affects the waterproof goods of the "Sincalor" process. The singular changes effected by this process is especially shown by the application of a hot iron to the surface, which destroys without the usual decompositions; the substance is burnt but is not rendered sticky. The process is stated to be secret.

IV. Vulcanisation.

Of all the changes effected by chance, observation, or chemical experiments of late years, few cases have been so important as the change in Indian-rubber by the process called Vulcanisation. The union of sulphur with caoutchouc to give new properties so valuable, that it may be said the former well-known quality of elasticity is now rendered so variable that almost every range, from the most delicate tenuity to the hardness of metals, has been obtained at will by the manufacturer. These changes in the caoutchouc are produced with a degree of permanence to defy air, water, saline and acid solutions; the material is incapable of being corroded, and more permanent under harsh usage than any other set of bodies in the world. Such are the results of the processes that induce a "change" in caoutchouc when sulphur and heat are employed; where metals and minerals are employed, "metallised" and "mineralised," "thionised," and a number of other terms have been used.

Digitized by Google

When caoutchouc is mixed with sulphur from 2 to 10 per cent. and then heated to 270° and 300°, it undergoes a change, it acquires new characters, its elasticity is greatly increased, and is more equable; it is not affected nor is the substance altered by cold, no climate effects a change, heat scarcely affects it, and when it does it does not become sticky and a viscid mass; if it yields to a high temperature it is to become harder, and will ultimately yield only at the advanced temperature to char and to decompose. All the ordinary solvents are ineffectual. The oils, grease, ether, turpentine, naphtha, and other solvents scarcely alter it, and the quantity of sulphur that will effect the change is known not to exceed 1 or 2 per cent. Further, if peculiar solvents, such as alkalies, remove all apparent sulphur from it, still the change remains; indeed, the analogy of steel to iron by the changes of condition effected by some small quantities of other bodies seems to be an analogous condition. Whatever the theory, which is exceedingly obscure, still the practice, by whatever name, is to obtain this changed state and exalted elastic properties.

"Vulcanisation" had its discovery in America. Mr. Goodyear relates, that having made a contract for Indian-rubber mail bags, they softened and decomposed in service, and while he thought a permanent article had been made, the colouring materials and the heat united to soften and to destroy the bags; hence, by this failure, distress of all kinds arose, and the trade was at an end. During one of the calls at the place of abandoned manufacture, Mr. Goodyear tried a few simple experiments to ascertain the effect of heat upon the composition that had destroyed the mail bags, and carelessly bringing a piece in contact with a hot stove, it charred like leather. He called the attention of his brother, as well as other individuals who were present, and who were acquainted with the manufacture of gum elastic to the fact, as it was remarkable, and unlike any before known, since gum elastic always melted when exposed to a high degree of heat. The occurrence did not at the time appear to them to be worthy of much notice. He soon made other trials, the gum always charring and hardening.

As ordinary Indian-rubber is always tending to adhere, many plans had been tried to prevent this. Chalk, magnesia, and sulphur had been patented in England and America, but no one seems to have supposed any other change would be produced by heat. Mr. Goodyear proceeded to try experiments, and produced remarkable results: samples of goods were shown about and sent to Europe.

The late Mr. Brockedon, so well known for his talents and love of scientific investigations, had long pursued means to obtain a substitute for corks, and, after much ingenuity, had devised Indian-rubber stoppers. As soon as all mechanical difficulties were over, objections were taken to the colour of the substance. Some samples of a changed rubber came into his possession, of which it was declared they would keep flexible in the cold, and were found not to have an adhesive surface. These caused numerous experiments, as it was recognised that a change had been effected, and although Mr. Brockedon failed, yet Mr. Hancock kept on working, combining sulphur, with every effect but that of vulcanisation, as he was ignorant of the power of heat to effect this change. He used melted sulphur, and produced proof of absorption, for the pieces of caoutchouc were made yellow throughout; by elevating the temperature he found they became changed, and then the lower end of slips "nearest the fire turning black, and becoming hard and horny" (the sulphur was melted in an iron pot). By these simple observations, as they now seem, Mr. Goodyear in America and Mr. Hancock in England, were induced to take out patents, and commence that series of manufacturing applications to which there seems no limit. The first English patent was by Mr. Hancock. The general method is to incorporate sulphur with caoutchouc, and submit it to heat; if any particular form is required, the mixture is placed in moulds, and takes off any delicate design that may be upon the iron or metal mould, and if these are submitted to higher degrees of heat, the substance and evolved gases expand, and thus a very hard, horny, or light but very strong substance is produced, called hard Indian-rubber, or "vulcanite." Mouldings, gun-stocks, combs, cabinet work, and hundreds of forms may be obtained by these curious means. The term vulcanisation was given by Mr. Brockedon to this process, which seemed by the employment of heat and sulphur to partake of the attributes of the Vulcan of mythology. For the "change" or "vulcanising" to get a yielding but permanently elastic substance, steam heat is usually employed in England, but in America, ovens, with various plans for producing dry heat, are generally employed.

The articles thus made being more elastic, unaffected by heat, cold, or solvents, attracted much attention, and Mr. Parkes was engaged to find out a method of producing the same effects now secured by patent: all ordinary means were used and given up, but he finally succeeded. The process of cold sulphuring of Mr. Parkes consists in plunging the sheets or tubes of caoutchouc in a mixture of 100 parts of sulphuret of carbon, and 2½ parts of protochloride of sulphur, for a minute or two, and

Digitized by Google

then immersing them in cold water. Thus supersulphuration is prevented in consequence of decomposing the chloride of sulphur on the surface by this immersion, while the rest of the sulphur passes into the interior by absorption. Mr. Parkes prescribes another, and perhaps a preferable process, which consists in immersing the caoutchouc in a closed vessel for 3 hours, containing a solution of polysulphuret of potassium indicating a density of 25° Beaumé, at the temperature of 248° Fahr., then washing in an alkaline solution, and lastly in pure water. A uniform impregnation is thus obtained.

In the first instance sulphur, caoutchouc, and heat were alone employed. The temperature and the time to which the mixtures are subjected to heat afford conditions to be best understood by the practical man. Vulcanised rubber now is not only the changed substance as produced by sulphur but it contains metallic oxides, &c. Metallic and mineral substances, and these compounds, are perhaps much better fitted for their respective uses than the pure sulphur and Indian-rubber. White lead, sulphuret of antimony, black lead, and other substances enter into these combinations. After the early experiments with vulcanised rubber there seemed reason to believe that changes slowly took place. The rubber was found to become brittle, and bands stretched out broke immediately. To a great extent this has been remedied by the use of lead, which seems to combine with the sulphur, for changes are believed by practical men to take place with pure elastic vulcanised caoutchouc, which do not occur when metallic matters are duly mixed. This is a trade statement, which may be true for some special uses. The brittleness may perhaps more fairly be admitted to be due to inexperience, and the difficulties to meet the demands of the public for a new article; but to those whom it may most concern, we have raised this question so far as to obtain the conscientious opinion of Mr. Thomas Hancock (now retired from business), who considers that by the peculiar plan of vulcanising by a bath of sulphur, and employing high pressure steam (described in Patent of 1843), he obtains what he calls *pure* vulcanising, that is, the use of sulphur, rubber, and heat. He states "That by this mode, the greatest amount of *extensile elasticity* is obtained, and that this quality is diminished in proportion as other matters are present in the compound." It may, however, be useful to record some of the results of early trials made by competent authorities, with the view of testing its ultimate employments. Mr. Brockedon stated at the Institution of Civil Engineers, that he had kept vulcanised Indian-rubber in tranquil water for 14 years without visible change, and he summed up the then knowledge of trade production, that there was perhaps no manufacturing process of which the rationale was so little understood as that of vulcanising caoutchouc; all was conducted on the observation of facts, a given quantity of sulphur to a certain thickness of rubber, at a certain temperature; and certain results were reckoned upon with confidence, but more from practice than theory. Mr. Brockedon had placed vulcanised rubber for 10 years in damp earth, and it exhibited no change.

When articles were moulded, the metal of the mould was not a matter of indifference: if of tin, the article was usually delivered perfectly clean, but if of brass or copper, then the material adhered to it, probably from the greater affinity of the sulphur for the metal than for the caoutchouc: these surface effects may well be borne in mind, for it appears not to be an easy matter to vulcanise large masses of caoutchouc, while sheets and thin films are readily changed. The soft masses of materials are placed in moulds, strongly secured, if a high temperature is to be used, and the mass comes out with the form thus given to it, and more or less elastic, hence the surface of a mass is always likely to be advanced in the vulcanising changes.

At present a very large proportion of the articles made have the forms given to them in the plastic state, and then subjected to heat; the change is effected, and they retain their form, although rendered permanently elastic.

Mr. Brockedon and Mr. Brunel tried this substance on the Great Western Railway in place of felt, to be used between the under sides of bearing rails and sleepers of railways. It appeared, by constant trials of nearly a year, to be quite indestructible to any action to which it had been exposed; the slips were indented by the edge of the rail, but not permanently so, and the surface was glazed, as if by friction; the slips were 6 inches wide, and weighed 8 oz. to the yard in length, the transit of the carriages was easier over that part of the line.

To test the power of endurance to heavy blows, Mr. Brockedon subjected a piece of vulcanised Indian-rubber, 1¼ inch thick and 2 inches area, to one of Nasmyth's steam hammers of 5 tons; this first rested on the rubber without effect, then was lifted 2 feet and dropped upon it without injury, then lifted 4 feet, the vulcanised cake was torn, but its elasticity was not destroyed. Still more severe trials were made, a block of vulcanised caoutchouc was placed as between cannon balls, with the whole power of the heaviest steam hammers employed, but the iron spheres split the block, and the elasticity of the vulcanised caoutchouc was not destroyed.

Digitized by Google

The natural and the vulcanised rubber have both been proposed as absolutely resisting the power of shot and rifle balls. Instructive cases are known of projectors offering to be clothed in their own cuirasses, and meet the charge of a fired rifle; when a deal board or leg of mutton has been substituted in the interior, they have been found perforated by the rifle ball, while back and front the cuirass showed no change, the truth being that the bullet cut its way through, and the edges of the aperture closed and joined, so that no hole being visible, led to the conclusion that the ball had declined to penetrate the rubber.

Among the applications may be named the construction of boats and pontoons. On the first trial in the Arctic regions, they were adopted to give possible conveyance when other boats could not be carried; the Indian-rubber boat soon won its character; it took the icy channels, and bore the brunt of all collisions, and without damage met rock, and ice, and storm, where it was believed no other boat could live. Since then, they have been employed on the rivers of Africa by missionaries and travellers, and on lakes in England.

Sheets of enormous size,—ship-sheets,—have been made 50 yards long and 56 inches wide, others 10 feet square; these are proposed to pass over a steam-vessel's side, to adapt a valve, fix a pipe, or repair, from the interior, the vessel itself, without going into dock. These stout sheets, $\frac{1}{16}$th inch thick, are let down by ropes over a ship's side, and brought over the hole or place for repair by the pressure of the water on the elastic sheet, the leak may be stopped and the ship pumped dry, pipes renewed, shot-holes, and leaks stopped. Indeed an early application of compounds of native rubbers and other materials was applied directly as sheathing for ships with success; but litigation among the parties caused the business to cease. Since the various plans for getting a flexible material have been successful, there seems no doubt but many unexpected applications will be made.

Messrs. Macintosh had coated some logs of wood with vulcanised Indian-rubber, and caused them to be towed in the wake of a vessel all the way to Demerara and back, and it was found that the coated logs were quite intact, while the uncoated timber was riddled by marine insects. The same firm stated: "That the only effect they could trace upon long immersed vulcanised caoutchouc, was a slight change of colour, perhaps a hydrate produced by superficial absorption, but this change of colour disappeared on being dried. If they were called upon to select a situation for the substance to retain its properties for the longest period, they would select immersion in water. After years of experience in the use of hose-pipes, pipe-joints, valves for pumps and steam-engines, they had never known an injury from the contact of any kind of water."

Mr. Goodyear sums up the advantages of vulcanised rubber under the following heads, as being either properties new or superior to those possessed by the natural caoutchouc:—

1. Elasticity.
2. Pliability.
3. Durability.
4. Insolubility.
5. Unalterability by climate, or artificial heat, or cold.
6. Inadhesiveness.
7. Impermeability to air, gases, and liquids.
8. Plasticity.
9. Facility of receiving every style of printing.
10. Facility of being ornamented by painting, bronzing, gilding, japanning, and mixing with colours.
11. Non-electric quality.
12. Odour.

Mr. Burke in describing his patented process, for the use of the golden sulphuret of antimony, now the property of Messrs. Warne and Co., for vulcanising and mineralising Indian-rubber, says, that he avoids two principal defects of the usual article, viz. its efflorescence of sulphur with an offensive odour, and its consequent decomposition and becoming rotten. He employs crude antimony ore (the sulphuret of that metal in fine powder), and converts it by boiling in water with soda or potash (carbonates) into the orange sulphuret of that metal (Kermes mineral) by the addition of hydrochloric acid to the fluid in slight excess. He combines this compound (after being well washed) with caoutchouc or gutta percha; either together or separately, according to the degree of elasticity which he wishes to obtain. This mixture is afterwards subjected to a heat of from 250° to 280° Fahr. He masticates the caoutchouc in the usual iron box, by means of the kneading fluted revolving rollers, subjecting the whole to heat. The antimonial compound is then added in quantities varying from 5 to 15 lbs., according to the strength and elasticity required in the compound. At the end of from one to two hours' trituration, the block is removed from the box, and while in a warm state it is strongly compressed in an iron

Digitized by Google

mould; and after being under pressure for a day or two is subjected to a steam heat for a couple of hours. The block thus prepared may now be cut into sheets, and afterwards divided into threads, or formed into such other articles as are desired. This forms the elastic red rubber.

Red Rubber. — The peculiar advantages of this mineralised rubber consists in the absence of the efflorescence common to all articles in which sulphur is used, the material seems preserved by the metallic oxide, is not liable to decomposition, or to become rotten or brittle; and is efficiently used for all sorts of valves.

This mineralised rubber, in various qualities, is used for flange-washers, packing, and for all general steam purposes, and joints for water and gas. Combined with cotton or linen canvas, it is employed for hose for locomotives, fire-engines, &c., pliable and strong, bearing 300 lbs. pressure on the square inch.

Another application of Indian-rubber by Messrs. Warne is carpet-cloth. This is a stout canvas, proofed thickly with mineralised Indian-rubber on the lower side; the upper surface is then printed and appears like oil-cloth: it is to combine the strength of ordinary floor-cloth with the flexibility of Indian-rubber, to have the properties of being impenetrable by water, and uninjured by damp; may be used without the noise and inconvenience of oil-cloth; it is of sufficient thickness to be yielding to the foot, for public offices and halls. Such a non-conducting substance may be a valuable addition to floors and passages, admitting of artistic contrast with the building, and yet affording comfort to those who for hours may have to remain there.

The improvements patented in January, 1849, by Mr. Christopher Nickels, consist in a modification of the grinding, kneading, or masticating machine, by furnishing its rollers with flanges at its two ends to prevent the rubber from coming against the ends of the cylinder. When sulphur is to be kneaded into it in the process of vulcanising the rubber, as it is called, he covers in the trough, but not otherwise. He has also given an excentric action to his roller.

He kneads with his rubber flowers of sulphur, or compounds thereof, in the proportion of 10 pounds of sulphur to 60 pounds of caoutchouc, and he subjects the compound to pressure in moulds. He prefers to treat the caoutchouc with the fumes of sulphur, or gases containing sulphur, in order to make a combination in the kneading cylinder. He uses a retort to distil the vapour of sulphur upon the rubber in the cylinder heated in a steam jacket. He also occasionally introduces hydrogen or phosphorus along with it. The compound mass thus obtained is to be subjected to hydraulic pressure in the moulds, heated to about 220° or 250° F. He causes the blocks to undergo a rolling motion under heavy pressure by machinery; the effect of which motion is to equalise the sulphur diffused in the blocks. Even thread of the ordinary Indian-rubber, when agitated in a box with flowers of sulphur, is said to be glazed and improved thereby.—*Newton's Journal*, xxxv. 21.

We are indebted for the following facts and remarks to Messrs. Silver and Co., of London and Woolwich.

The chief improvements operated in caoutchouc by the process of vulcanisation, are the properties of resisting and remaining unaffected by very high degrees of heat and cold, and increased compressibility and elasticity. In its natural state, Indian-rubber becomes rigid by exposure to cold, and soft and plastic by heat, under the action of boiling water. Articles manufactured of this substance suffer and lose the qualities which constitute their value in cold and in hot countries. A piece of Indian-rubber cloth, for instance, taken to Moscow in December or January, would assume all the qualities of a piece of thin sheet iron, or thick pasteboard; the same cloth would in India or Syria become uncomfortably pliable, and present a moist and greasy appearance; and, indeed, after being folded up some time, it will be found to be glued together. Nothing but vulcanisation insures the equable condition of the articles in the most intense cold, and, in heat up to and above 300°, makes Indian-rubber fit for practical purposes. These advantages have conduced to its being very extensively used in connection with machinery of every description; and as steam power is still further employed, and as the numerous other advantages possessed by vulcanised Indian-rubber become known (for it is only of late that any idea of their extent has been realised) its application will be extended and proportionally its consumption increased.

The compressibility and the return to its former dimensions, when the pressure has ceased, in one word, the elasticity, of the Indian-rubber is increased to such a degree by vulcanisation, that comparing the improved with the original article, it may be said that the native Indian-rubber is almost devoid of elasticity. The high degree of elasticity which it obtains by vulcanisation is shown by the results of the following experiments, in which a block of the vulcanised Indian-rubber, of the kind used for the manufacture of railway carriage springs, measuring 6 inches outside disc, 1 inch inside disc, and 6 inches deep, was taken and exposed to pressure:—

Digitized by Google

A pressure of	½	ton reduced it to	-	-	-	-	$5\frac{8}{16}$ deep.
ditto	1	ditto	-	-	-	-	$5\frac{1}{16}$ do.
ditto	$1\frac{1}{2}$	ditto	-	-	-	-	$4\frac{9}{16}$ do.
ditto	2	ditto	-	-	-	-	$4\frac{3}{16}$ do.
ditto	$2\frac{1}{2}$	ditto	-	-	-	-	$3\frac{13}{16}$ do.
ditto	3	ditto	-	-	-	-	$3\frac{1}{16}$ do.
ditto	$3\frac{1}{2}$	ditto	-	-	-	-	$3\frac{1}{4}$ do.
ditto	4	ditto	-	-	-	-	3 do.

The block was left under pressure for 48 hours, and in each case returned to its original dimensions after a short period when the pressure was removed.

Indian-rubber and canvas hose are now generally used where leathern pipes were used in former times, viz. where a flexible tube is required, in fact, where it is not possible to use a metal pipe. The advantages which the Indian-rubber and canvas hose has over the leathern pipe, are, that it does not require draining and greasing after being used, that it can be left in the water without rotting, and that it does not harden or lose its flexibility. Leathern pipes, on the contrary, require the most careful treatment, and even with the greatest care they are liable to frequent leaking. Indian-rubber and canvas hose are made to resist atmospheric and hydraulic pressure, say up to 1000 lbs. pressure on the square inch. Of this Indian-rubber and canvas hose, the descriptions mostly in use are the following:—

1 Ply which will stand a pressure of about	-	-	20 lbs.	to square inch.
2 Ply for conducting water	„	-	30 to 40	„
2 Ply stout	„	-	- 75	„
3 Ply for brewers, &c.	„	-	- 75	„
4 Ply for steam and fire-engines	„	-	- 175	„

Among the most recent uses of Indian-rubber and canvas, are those of its manufacture into gas and ballast bags, the former are used for the transport of gas, and applied to the various emergencies of gas engineering. Indian-rubber gas tubing is now in general use, the great advantage over metal tubes being, the ease with which gas can be conveyed to whatever part of the building it may be required; this, where any alterations are being effected, is a great desideratum. Ballast bags, large stout bags of Indian-rubber and canvas, capable of holding from 1 to 5 or 10 tons of water, are coming into use as the most convenient form of ballast, thus saving valuable space which is made available for cargo. These bags may be emptied at any time, and when flattened down and rolled up they can be stowed away. Indian-rubber bags for inflation have also in a few cases been made use of for buoying up vessels, but hitherto the practice has been experimental only, and such floating machines are not as yet generally in use.

The vulcanising Indian-rubber on silk or woollen was for a long time considered impracticable, because the process of vulcanisation destroyed the fibre and texture of the two substances; and it is stated that now this process is effected in a manner which deprives neither silk nor wool of their natural qualities and strength. By this improvement, combined with Silver's patent process of annihilating the unpleasant smell which all Indian-rubber goods used to acquire in the process of manufacture, the advantages of that substance for clothing purposes are extended to the lightest and the warmest of our textures. Silk and Indian-rubber garments are made without any deterioration of the strength and durability of the stuff, while they are perfectly free from odour of any kind.

V. Mechanical Applications of Caoutchouc.

Numerous important applications of caoutchouc have been made in the mechanical arts, among which we may mention, springs for railway and common road carriages, military carriages, lifting springs for mining ropes and chains, towing ropes and cables, rigging of ships, recoil of guns on ships, the tyres and naves of railway and other wheels, to axles and axle bearings, to windows of railway carriages, railway switches, bed of steam-hammer, couplings for locomotives and tenders, packing for steam and water joints, shields for axle boxes, sockets for water pipes, bands for driving machinery, valves for pumps, tubes for conveying acids, beer, water, and other fluids, packing for pistons.

The Exhibition of 1862 presented to us an enormous display of Indian-rubber

Digitized by Google

manufacture. The applications of caoutchouc to driving belts for machinery, to washers and buffers, were numerous, and many of them excellent.

Messrs. Perreaux & Co. were exhibitors of a valve for pumps made of vulcanised caoutchouc. Its simplicity and efficiency were remarkable: the valve was simply a cylinder of Indian-rubber, with its two sides at the uppermost end pressed together like lips, and then vulcanised, which makes the material retain the form given to it. This valve, when in position, was open below, and closed above in the form of a wedge; the fluid easily passes upwards owing to the elasticity of the material, but the downward pressure firmly closes the lips and prevents return. A novelty called *Ferruginous Caoutchouc* was exhibited by Messrs. Warne & Co. This was made into pipes, &c., and was recommended for mending boilers. It could be easily moulded at first, but was said to become as hard as iron. Of EBONITE and KAMPTULICON there were many examples, embracing a curious variety of articles from philosophical apparatus, in the form of electrical machines, the pieces of furniture, and ornaments for ladies' wear. See EBONITE and KAMPTULICON. In the following pages we have endeavoured to give the most important uses of Indian-rubber, as mechanical appliances. Most of those mentioned will be found to be in actual use in manufactories.

Springs.—The first proposal to use caoutchouc for springs that we are aware of occurs in *Lacey's* patent, in 1825, when blocks of caoutchouc were proposed to be used, having dividing plates of iron between each series; but little seems to have been done towards any practical application at that time: later in 1844 *Melville* proposed to use spheres of caoutchouc, enclosing air, and separated by discs of wood or metal, the whole being enclosed in iron cases, and used for buffers and bearing springs for railway carriages. In 1845 *Walker* and *Mills* proposed to use bags of caoutchouc enclosing air, and contained in cases of iron, for use as buffer springs.

The next improvement is contained in *Fuller's* patent of 1845, which consists in the use of cylindrical rings of vulcanised Indian-rubber, in thicknesses varying from ¼ to 3 inches, and with diameter of ring suitable to the power of spring required; between each of these cylindrical rings he places a thin iron plate, through a hole in the centre of which passes a guide rod. *Fig.* 405 shows Fuller's spring in section and plan.

405

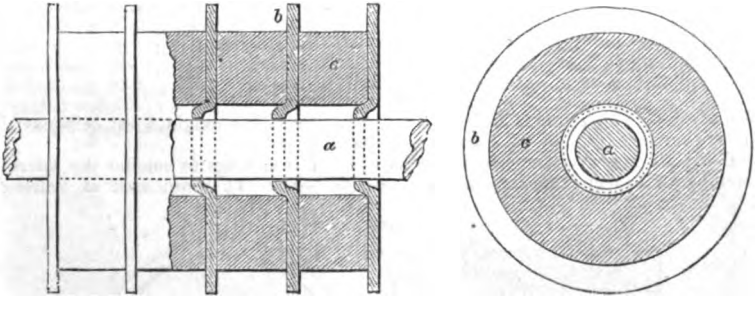

These springs have been extensively used as buffer, bearing, and draw springs for railway uses alone and in combination with *De Bergue's* improvements: some defects have been found in practice in this form, to obviate which, the ingenuity of later inventors has been exercised; the defects alluded to are, the tendency to swell out at the central unsupported part of the ring, thus from the undue tension rendering it liable to break under sudden concussion, and occasioning complete disintegration of the material where not breaking.

To obviate these defects, *George Spencer* (in 1852 and 1853) proposed to mould the caoutchouc at once in the form it assumes under pressure, and then to place a confining ring of iron on the larger diameter. (See *fig.* 406.) By this ingenious plan, the caoutchouc loses its power of stretching laterally, being held by the ring *b*, secured in a groove moulded in the cone to receive it; when the pressure is applied to the ends, the rubber is squeezed into the cuplike spaces *c*, and thus the action of the spring is limited. By this plan, rubber of a cheaper and denser kind can be used than on the old cylindrical plan, and the patentee states that many thousands of carriages and trucks are fitted with these springs which give entire satisfaction; among which, are

Digitized by Google

those on the Brighton, South-Western, North London, South Wales, Vale of Neath, Bristol and Exeter, Taff Vale, Lancashire and Yorkshire, St. Helen's, Bombay and Baroda, Theiss Railways, and many others. These cones are used as buffer, bearing,

406

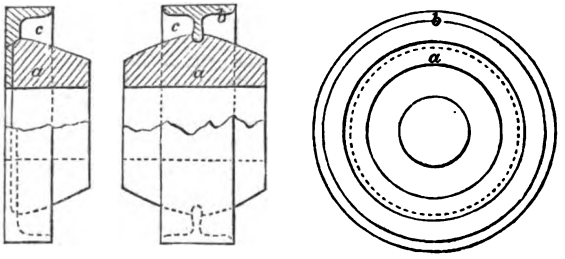

and draw springs for railway carriages, and are made in several sizes to suit various uses. To show the power that such springs are equal to, we append the result of an experiment on a No. 1 cone (for inside buffers), 3 inches in length, 3¾ inches diameter at ring, 5 inches diameter of ring.

1*st Experiment*, without the confining ring, weight of cone 1¼ lb.

	Inches.	Giving a stroke of
Without any pressure the cone measured -	3 - -	
With pressure—280 lbs. „ - -	2½ - -	½ inch.
„ —448 lbs. „ - -	2 - -	1 „
„ —672 lbs. „ - -	1½ - -	1½ „

2*nd Experiment.*

With the confining ring *b*, on the *same* double cone; the following were the results:—

Without any pressure the cone measured - -	3 inches, as before.
With—448 lbs. „ - - -	2½ „
With—1,680 lbs. „ - - -	2 „
With—2,912 lbs. „ - - -	1¾ „
With—15,680 lbs. „ - - -	1½ „

The advantages are stated to be, less first cost than steel; less weight, 6 cwt. being saved in each carriage by their use; and great durability.

Coleman's improvement consists in the use of iron rings to confine the lateral swelling of Indian-rubber cylinders. (See *fig.* 407.) They are used as bearing

407

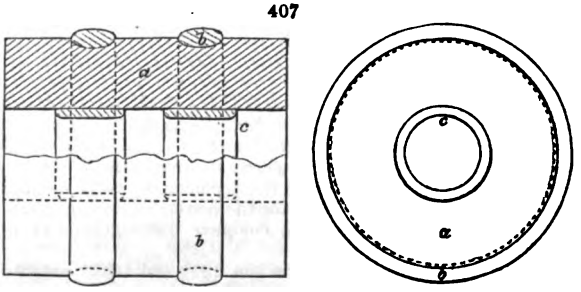

springs for engines and tenders on the North-Western railway, by J. E. M'Connell, Esq., who prefers them to steel, as being easy in action, durable, safe, and easy of repair; they are used also as buffers and draw springs, but not to the extent of Fuller's and Spencer's form. To give an idea of the power of such a spring, we append the result of an experiment of one that we witnessed at Messrs. Spencer and Co.'s.

Experiments with one of Coleman's cylinders with and without the rings. Cylinder 6 inches long, 6 inches diameter, 1 inch hole, weight 9 lbs.

Digitized by Google

Tons pressure.	Without the confining rings. Inches Length.	With the 2 confining rings. Inches length.
0	6	6
½	5 7/16	5 13/16
1	5	5 3/8
1½	4½	5 ¼
2	4⅛	5 ¼
2½	3⅝	5⅛

The next form of these springs is the invention of *R. Eaton's* (see *fig.* 408). This spring seems to be peculiarly adapted to use where a powerful spring, acting through a small space, and taking little room, is required as for use in mining ropes and chains, (see SAFETY CAGES); iron ropes, for ship-rigging, for engine-springs, station buffers, and powerful draw-springs. Eaton's main idea is the use of laminæ of Indian-rubber, of a maximum thickness of ½ an inch, with dividing plates, as in Lacey's and Fuller's, which avoids the objections stated above, by supporting the Indian-rubber at smaller

408

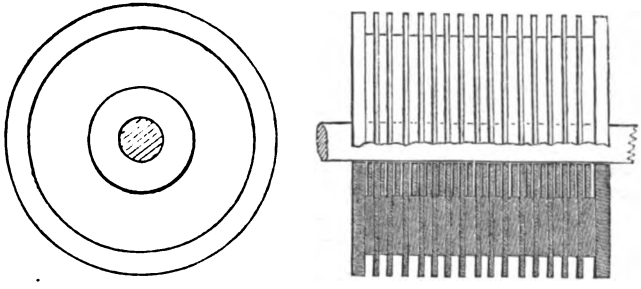

intervals; for springs, where great power is wanted in little compass, and to act through short distances,—as in engine bearing springs, lifting springs, and some kinds of draw-springs,—this form proves to be well suited. We give below the result of one such spring of the following dimensions: the spring was built up of 24 laminæ, ¼ of inch thick, 4½ inches square, with a thin iron plate between each, and a hole of one inch diameter for the guide rod through all; this, and several of the other experiments were made in a press of great delicacy and power, constructed for Messrs. Geo. Spencer and Co., for the purpose of testing such springs, at their office, in Cannon Street West, London (see PROVING MACHINE).

Experiment.

Tons.	Length including plates. Area of spring, 19 square inches.
0	8 3/16
1.0	7¾
2.0	7 7/16
3.0	7 1/16
4.0	6¾
5.0	6⅝
6 0	6½
7.0	6⅜
8.0	6⅜
9.0	6¼
10.0	6⅛

Hodge's compound spring is designed to obviate the frequent breakage of the steel springs on locomotive engines. *Fig.* 409 shows one of these springs; a block of Indian-rubber is placed on each end of the steel spring, or is suspended under the engine frame; they are in use on several of the English railways, and are said to answer the purpose intended well.

Scott's patent (see *fig.* 410), dated May 1856, consists in the use of blocks of Indian-rubber, or cones, placed over the centre of spring; they are to obviate the danger of overloading carriages and trucks, a frequent source of danger to the springs, and are made to take the whole load in case of a spring breaking: they are in use on the Brighton and Crystal Palace Railway, Eastern Counties, Bombay and Baroda, and others: the same patentee has several ingenious applications of Indian-rubber to carriages, to wheel tyres, to the bosses of wheels, to shackle pins, and to the axle.

Digitized by Google

Bridges' Patent (*fig.* 411).—This inventor ingeniously proposes to use Spencer's cones in blocks of wood, instead of iron confining rings. A series of them are enclosed in a case formed in the side timbers of the underframe of the railway truck or carriage;

409

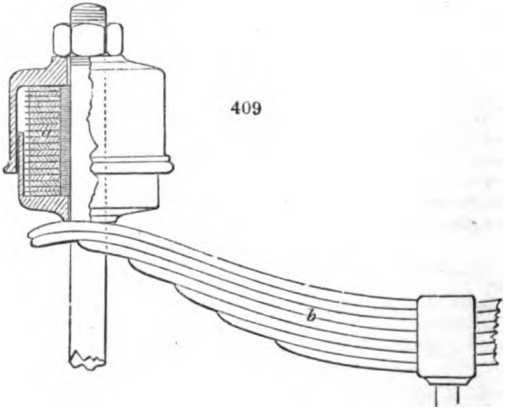

the cup space is formed in the block of wood, as our figure shows, and no guide rods are required: the same principle is applied to draw and bearing springs. The advan-

410

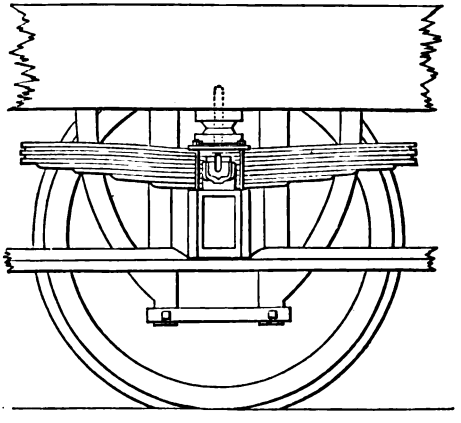

tages proposed by this arrangement are, the dispensing with guide rods and the taking the ultimate blow on blocks of wood, which deadens its effect; they are said to

411

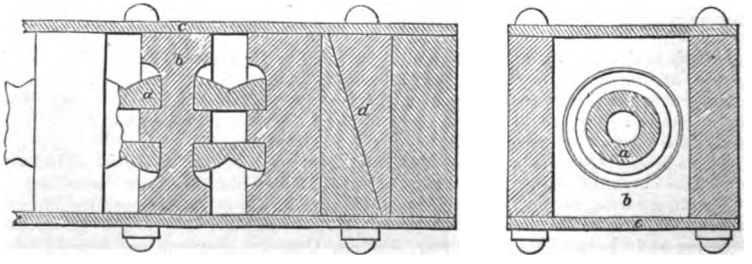

answer very well, and are used almost exclusively on the South Western and Bristol and Exeter Railways.

Digitized by Google

In 1847, Mr. De Bergue patented some improvements in the application of Fuller's spring to buffer, bearing, and draw springs for railway uses.

Mr. Fuller's patent.—The applications for common road carriages, patented by Mr. Fuller of Bucklersbury in 1852 and 1855, have been extensively used, both in the form of cylindrical rings acting by compression and also of suspension springs for lighter kinds of vehicles.

Respecting these springs, *figs.* 412, 413, we have been furnished by the patentee with the following particulars:—

The form generally used for heavy purposes, such as drays, vans, waggons, &c., consists of a series of rings of cylindrical or circular form, working on a perpendicular rod or spindle, on each side the axle, with the usual separating plates or washers; the depth and diameter of the rings being regulated by the weight to be sustained and the speed required.

During the late war, these springs were introduced by Mr. Fuller to the notice of the Government authorities at the Royal Arsenal, Woolwich, and were in consequence extensively adopted for all kinds of military carriages, store waggons, ammunition waggons, &c. They are also applied in the suspensory form for the medical cars and ambulance waggons for the wounded, for which purposes the use of Indian-rubber on the principle of extension is found to produce the easiest and most satisfactory spring hitherto discovered.

When the material is used as a suspension spring, the most advantageous form for the purpose is found to be round cord of the best and purest quality, prepared by solvents, and about ¼ or ⅜ inch diameter.

A continuous length of such cord is wound at a considerable tension over the ends of two metal sockets or rollers, in shape something resembling a cotton reel, and whilst in a state of tension, bound at each end with strong tape or other suitable

412

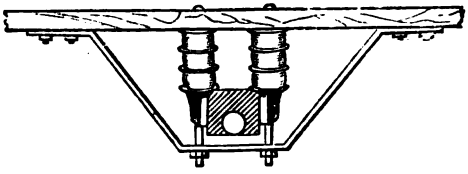

413

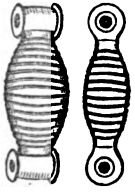

binding; the number of cords composing the spring, varying from 10 to 20, 30, or 40, according to the strength required.

Another important adaptation of Indian-rubber by Mr. Fuller, is that of anchor springs, towing ropes, and springs for the recoil of guns and mortars.

During the Russian war, about 120 mortar boats were constructed of light draught, each carrying a 13-inch mortar on a revolving pivot and platform in the centre of deck. It was considered desirable, if possible, to diminish the shock produced by the tremendous recoil of such heavy artillery on the deck of small vessels, and after a series of trials at Shoeburyness, which proved perfectly satisfactory, the plan was adopted of mounting each platform upon twenty powerful rings of Indian-rubber, the united force of which, at 1 inch deflexion, would resist about 400 tons. The performance of these mortar vessels at Sweaborg, the Black Sea, and also subsequently in China, has been highly satisfactory; the intervention of this elastic material being found effectually to preserve the timbers of the vessel.

The application to towing ropes and anchor cables, has not yet been tried to an extent sufficient to test its merits; but it is universally admitted by engineers and practical men, that a powerful spring adapted to the chain cables of vessels when riding at anchor (acting on the principle of the buffer and draw-springs) would often prove of invaluable service in preventing the parting of the cable and its disastrous results.

In the list of patents, we have indicated the nature of several other improvements, which, being merely variations of the more important ones, we do not dwell on here.

Support for railway chairs.—Several proposals have been devised to this end, and a number of plans are given in *Coleman's* patent, 1852. He places the Indian-rubber under the chair, between the chair and rail, between the rail and sleeper. The plan has been only partially tried, but the proposer is very sanguine that the plan will prove useful.

Digitized by Google

Wheel tyres.— *Fig.* 414 shows an important application to the tyres of wheels for railway purposes. A thin band of Indian-rubber is inserted between the tyre and spoke ring, by first covering it with a thin plate of iron, to protect the Indian-rubber while the hot tyre is put on, when the wheel is instantly thrown into water and cooled. This has been severely tested for some time, and found to answer very well; the advantage gained, is the saving in the breaking and wear of the tyres.

414

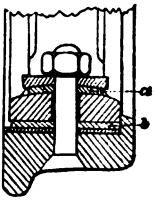

For windows. — Small ropes of Indian-rubber are inserted in grooves at each side of the window, and so stop out draught and prevent noise.

For steam-hammer beds.— A plate of Indian-rubber ¾ thick, is placed under the bed of the hammer; the effect is greatly to diminish the transmission of shocks to the building, and to cheapen the foundation: as an instance of useful application, we may state, that at Messrs. Ransome and May's works, at Ipswich, the working of the steam-hammer shook the building and windows to an alarming extent; but the insertion of blocks of vulcanised rubber under the anvil, almost entirely obviated these effects.

Joints between engines and tenders.—Messrs. *Lund*, *Spencer*, and *Fenton*, have also introduced the use of rings of this material to form a joint between the locomotive and tender (*fig.* 415). They are extensively used, and entirely prevent the leakage

415

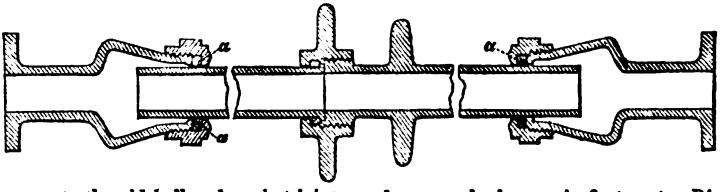

common to the old ball and socket joints, and are much cheaper in first cost. Rings of Indian-rubber were proposed by Mr. Wickstead, for closing the socket joint of water pipes, and they are used in a variety of forms for that purpose.

Messrs. *W. B. Adams*, *Normanville*, *Wrighton*, and *Hodge*, have also introduced the use of shields and rings of Indian-rubber, for keeping the backs of axle boxes tight, so as to prevent the escape of the grease or oil, or the entry of dust and dirt.

A large trade has been established in the supply of bands of Indian-rubber for driving machinery; for many purposes they answer better than leather, water having no effect on them and there being little or no slip and fewer joins they are made in all widths, and belts costing 150*l.* each have been used in some cases. They are made with two or more layers of thread cloth between, and outside of which the rubber is placed.

As valves for steam and water pumps, Indian-rubber prepared to suit the use is also much used by all our large engine makers.

As tubes for conveying beer, water, and acid, Indian rubber is also found to answer well, and is used largely. The tubes are made in all sizes and strengths, and the best are made by alternate layers of cloth and Indian rubber. Very good tubes are also imported from America.

Another useful application of this material, is for the joints of steam and hot water pipes; for this and similar purposes, a peculiar compound, known as Hodge's compound, is used. This packing consists in the mixture of cotton fibre with the rubber used for springs, known as the triple compound.

The success of these applications depends of course entirely on the composition being suitable to the various purposes to which they are applied; some being made to resist the effect of heat, others of acids, grease, and oils, the study of which has become an important element in the commercial adaptations of the various inventions enumerated.

VI. Solarisation of Caoutchouc.

Singular as caoutchouc is in its properties and in its application, it is probable that besides the mechanical and electrical qualities and general resistance to chemical action, it may yet be found to have other modifications peculiar and valuable. The practical men most conversant with this substance, and deeply involved with patents and successful manufactures, record their conviction of the influence of solar light, and the marked distinctions supposed to exist between the influence of solar and terrestrial heat upon this substance.

Mr. Hancock says, "In my early progress, I found that some of the rubber I

Digitized by Google

employed was very quickly decomposed when exposed to the sun: as the heat was never more than 90°, and rubber exposed to a much higher temperature was not injured by it, I suspected that light had some effect in producing this mischief. To ascertain this, I cut two square pieces from a piece of white rubber, one of these I coloured black, and exposed it to the sun's rays; in a short time, the piece which had been left white, wasted away, and the sharp angles disappeared, it seemed like the shape of a thin piece of soap after use; the blackened piece was not at all altered or affected. The lesson taught me by this experiment was of great value ever after."

Speaking of the annoyances and failures in the early Macintosh goods by heat, grease, &c., Mr. Hancock says, "The injurious effect of the *sun's rays* upon thin films of rubber we discovered and provided against before much damage accrued."

Mr. Goodyear says, "In anticipation of the future as relates to a mode of treatment in manufacture, which, though lightly esteemed and little thought of now, I believe will be extensively practised hereafter, I feel bound to make a strong though qualified claim to the process of solarisation. This process consists in exposing caoutchouc, when combined with sulphur, to the sun's rays." Again, "when exposed to the sun's rays for several hours, a change is produced which may be called natural vulcanisation, in all thin fabrics or thin sheets of caoutchouc." "Solarisation is an effectual and cheap process of curing Indian-rubber." He further says, "it is well established that Indian-rubber melted at about 200°, and in the sun's rays at 100° or less. Another effect yet more remarkable in the treatment of gum elastic, is that of the sun's rays upon it when combined with sulphur and exposed to the sun, either in hot weather or cold, it becomes solarised, or divested of its *adhesive* quality; whereas, no other kind of light or heat has any similar effect, until the high degree of heat is applied to it, about 270°, which is used in vulcanising."—*Goodyear*, p. 114, vol. i. New Haven, U. S.

VII. Trade Applications of Vulcanised Indian-Rubber.

Macintosh and Hancock give the following descriptions of their trade quality, to guide practical men; other manufacturers may also have similar scales of rubber.

A quality is the most *elastic*, it weighs about 60 lbs. per cubic foot, or $\frac{1}{29}$th of a lb. per cubic inch (this is understood to mean pure sulphur and caoutchouc, all other qualities are mixtures).

D quality, weighs 82lbs. per cubic foot, or $\frac{1}{21}$ of a lb. to 1 cubic inch.

E quality, more elastic than D, weighs about 92 lbs. to the cubic foot, or $\frac{1}{19}$ of a lb. to 1 cubic inch.

F. C. Fibrous compound, used for flange washers, valves, and pump-buckets, weight $\frac{1}{23}$th of a lb. per cubic inch.

Many applications of caoutchouc can only be named. Surgical apparatus, and remedial adaptations for hospital purposes, would alone occupy great space: to call attention to the various ingenious contrivances, other information and specialities may be referred to the heads of Indian-rubber and vulcanite, or hard rubber, vulcanisation, hose pipes, pontoons, life-preserving apparatus, shoes, waterproof fabrics, washers for joints, valves for engines and pumps, elastic, endless, and driving bands. For hot and cold water valves this substance has been one of the most valuable applications to ocean steamers for many years.

The old mode of thread making is now entirely obsolete, having given way to a new one rendered necessary by the introduction of vulcanised Indian-rubber, which now, for the purpose of thread cutting, is always produced in the sheet by the spreading process before described, and of a thickness exactly agreeing with the widths of the thread to be cut; that is, if No. 28 be required, which means, if 28 of the threads were placed side by side they would measure one inch; then the sheet is spread $\frac{1}{28}$th of an inch in thickness, and consequently when 28 are cut out of the inch, square threads, *i.e.* threads with a rectangular section, are produced. The sheets are wound upon rollers, which are then fixed on centres in the lathe, and by means of a slide rest and a suitable knife, slices of the sheet are cut off, varying in thickness from $\frac{1}{10}$th of an inch, to $\frac{1}{30}$th of an inch; and one of the greatest advantages of the vulcanised thread is the great length that can be cut; from a sheet of rubber wound upon a roller, hundreds of feet or yards may be cut at once into one continuous thread, whereas from the bottles the lengths were short, had to be joined, and differed in quality from each other.

Vulcanised thread is covered with silk and cotton; both are wound round it; the vulcanised thread is considerably more elastic than the native thread cut from bottles or sheets. Belts and bandages made from the vulcanised thread are very superior to the old sort, now completely obsolete.

The vulcanised rubber thread has lately been introduced into the Jacquard loom, by Messrs. Bonnet and Co., Manchester; the thread used is, by its elastic force, to supersede the use of the weights commonly employed, the number of which sometimes amounts to from two to three thousand in one loom.

Digitized by Google

In preceding editions, the names of Hancock and Goodyear were scarcely mentioned, yet for thirty-six years Mr. Hancock has laboured to make a manufacture. For many years Messrs. Hancock and Macintosh were alone in the trade, indeed until Macintosh's patent ceased, when the trade widened. His first patent was dated 1820, and the masticating machine was the foundation of the manufacture. Mr. Goodyear had his attention drawn to the subject by the manufacture of gum elastic in the United States, about 1831-2. Both have contributed to the literature of the art, (mingled with personal narratives, and trade affairs,) and it is presumed that had the late Dr. Ure had their practical works before him, eulogistic mention would have been offered for past neglect.* Both gentlemen's patents are being worked by other men, and of the value of their processes, and the trade, some idea may be entertained when "The Scientific American" recently, while opposing the renewal of the terms for certain patents about to expire, gives the estimate of worth at 2,000,000 dollars for Chauffée's patents, and Goodyear's several patents are set at 20,000,000 dollars. It is probable that the trade was not a really profitable one in America until about 1850. Of the value of the works in England and France of caoutchouc applications no adequate data appears. Of the facts involved in some of these patents, we may quote Mr. Hancock's words, p. 106. "I think I might venture to state, not boastfully, but as a matter of fact, that there is not to this day, 1856, any document extant, (including those referred to in it,) which contains so much information upon the manufacture and vulcanisation of rubber, as is contained in this specification. If any of my readers," he goes on to say, "can point out such a document, I shall feel obliged if they will inform me of it." This is the patent of 1843.

The following is a list of fourteen patents, to Thomas Hancock, on the treatment and applications of Indian-rubber:—

To Articles of Dress - - - - -	April 28, 1820.
„ Pitch and Tar - - - - -	Mar. 22, 1823.
„ Leather, by Liquid - - - -	Nov. 29, 1824.
„ „ „ Solution - - -	Mar. 15, 1825.
„ Ropes and Cordage - - - -	Mar. 15, 1825.
„ Ornaments, &c. by Liquid - - -	Aug. 5, 1830.
„ Expanding Cushions - - - -	June 4, 1835.
„ Dough Waterproofing - - -	April 18, 1837.
„ Dough Sheets - - - - -	Jan. 23, 1838.
„ Vulcanizing - - - - -	Nov. 21, 1843.
„ Obtaining Forms by Moulds, &c. -	Mar. 18, 1846.
„ Converting Applications - - -	Nov. 19, 1846.
„ Printing „ - - -	Nov. 2, 1847.
„ Vulcanised Solutions - - -	Dec. 30, 1847.

Mr. Hancock gives the following Table, compiled from official sources.

Imports of Indian Rubber into the United Kingdom for the Years 1842 *to* 1855, *inclusive.*

Year.	East Indies.	United States.	Brazil.	Java.	Elsewhere.	Total.
	lbs.	lbs.	lbs.	lbs.	lbs.	lbs.
1842	42,112	33,936	222,432	- -	18,704	317,184
1843	7,504	17,024	306,320	27,664	784	359,296
1844	- -	13,664	422,576	2,240	10,416	448,896
1845	- -	1,232	329,952	- -	9,416	340,592
1846	1,568	55,552	440,272	224	54,096	551,712
1847	13,776	2,576	630,336	11,760	1,120	659,568
1848	45,472	- -	417,200	6,608	2,016	471,296
1849	62,608	- -	515,760	8,400	9,968	596,736
1850	32,480	61,488	668,304	35,504	55,328	858,104
1851	66,864	181,888	1,237,936	191,968	31,472	1,710,128
1852	356,472	- -	1,435,056	293,888	110,768	2,195,984
1853	391,216	21,392	1,143,520	77,280	307,104	1,940,512
1854	663,936	277,200	1,660,960	184,912	302,848	3,089,856
1855	940,128	284,928	2,395,344	203,304	1,166,032	5,006,736
Total -	2,623,936	950,880	11,825,968	1,060,752	2,080,064	18,541,600

* Personal Narrative of the Origin and Progress of Caoutchouc or Indian Rubber manufactured in England, by Thomas Hancock. London, 1857: Longman and Co., 8vo. pp. 283 (plates).
Gum Elastic and its Varieties, with a detailed Account of its Applications and Uses, and of the Discovery of Vulcanisation; by Charles Goodyear. New Haven, U. S. Published for the Author, 1853, 2 vols. 8vo. pp. 246, 379 (plates).

Digitized by Google

In 1864 we *imported* from the following places :—

Caoutchouc in raw state :

	cwts.	£
From West coast of Africa	3,267	10,075
Central America	1,512	10,396
New Granada	8,806	60,982
Brazil	38,512	307,923
From British India: Bengal and Pegu	4,404	26,324
Singapore and Eastern Straits Settlements	8,141	47,902
Elsewhere	6,385	38,843
	71,027	502,645

Caoutchouc manufactures : overshoes and boots—

	lbs.	£
From Hanover	55,348	2,762
Hamburg	33,516	1,676
From France	101,344	5,067
Other parts	12,055	604
	202,163	10,109

Other sorts :—

	lbs.	£
From Hanover	52,645	3,554
Hamburg	108,629	9,645
Bremen	16,646	1,315
Holland	54,892	3,077
France	102,165	5,128
From United States: North Atlantic Ports	13,503	2,677
Brazil	86,691	7,897
Other parts	13,215	1,996
	448,386	35,289

Our *Exports* of Caoutchouc in 1864 were :—

Foreign and Colonial produce.

	cwts.	£
To Russia	3,650	25,324
Hanover	1,216	8,603
Hamburg	2,516	17,801
Bremen	1,698	12,013
Holland	3,864	27,338
Belgium	803	5,681
To France	8,816	62,373
United States: North Atlantic Ports	4,825	34,137
Other countries	1,719	12,162
	29,107	205,932

Caoutchouc manufactures of the United Kingdom :

	£
To Russia	25,819
Norway	3,103
Denmark	3,224
Hamburg	39,188
Holland	32,875
Belgium	16,205
France	126,116
Portugal, Azores, and Madeira	6,463
Spain: and the Canaries	30,229
Italy: Sardinian States	4,422
Tuscany	3,088
Naples and Sicily	4,868
Turkey Proper	5,262
Egypt	3,924
United States: North Atlantic Ports	33,628
To Pacific Ports	218
New Granada	2,401
Brazil	4,278
British India: Bombay and Scinde	2,371
Madras	252
Bengal and Pegu	6,496
Singapore and Eastern Straits Settlements	63
Ceylon	135
Australia	34,958
British North America	18,026
Other countries	24,907
	412,529

CAPERS. The *Capparis spinosa*, the flower buds of which constitute the capers of the shops. Their quality depends exclusively upon the age at which they are gathered, the smallest and youngest being the most delicate and the dearest; and the largest, the coarsest and cheapest. The buds are plucked before they open, and thrown into strong vinegar, slightly salted, where they are pickled. The crop of each day is added to the same vinegar tub, so that in the course of the six months during which the caper shrub flowers, the vessel gets filled, and is sold to persons who sort the capers by means of copper sieves. This metal is attacked by the acid, wherefrom the fruit acquires a green colour, much admired by *ignorant connoisseurs*. About 60,000 lbs. a year are consumed in this country.

The capsules of the caper spurge, *Euphorbia lathyris*, are sometimes pickled as a substitute for capers ; but although the acid destroys some of the acrid properties, the free use of them is dangerous.—*Pereira*.

We *imported*, in 1864, CAPERS, including the pickle, 215,658 lbs.

CAPILLAIRE. Originally a kind of syrup, extracted from maiden-hair. The term is now applied to a finely clarified simple syrup, which is made usually with orange-flower water.

CAPNOMORE. ($C^{40}H^{22}O^4$ [?]) One of the substances discovered by Reichenbach in wood tar.

CAPRYLAMINE. ($C^{16}H^{19}N$.) A volatile base obtained by Squire, and also by Cahours, by acting on ammonia with iodide of capryle. It is homologous with methylamine, &c.—C. G. W.

CAPSTAN. (*Cabestan*, Fr. ; *Spille*, Germ.) A machine whereon the cable is wound successively in weighing the anchor of a vessel. It is a species of wheel and axle; the axle being vertical, and pierced with holes near its top for the insertion of the ends of horizontal levers, called handspikes, which represent the wheel. These are turned by the force of men moving in a circle. The power applied to the lever is to the resistance to be overcome (the weight of the anchor, for example,) when the forces are in equilibrio, as the radius of the cylinder round which the cable is coiled is to the circumference described by the power. It is manifest that the radius of the

Digitized by Google

axle must be augmented in this computation by half the diameter of the cable, which is supposed to lie always one coil thick upon it. The force of a man, thus applied, has been commonly estimated as equal to the traction of 27 pounds hanging over a pulley. Friction being so variable a quantity in capstans, renders the exact calculation of its mechanical effect somewhat uncertain. A stout man, stationed near the bottom of the axle, holds fast the loose part of the cable, which has already made two or three turns; and, being aided by its friction upon the wood, he both prevents it from slipping backwards, and uncoils each turn as it is progressively made.

Mr. Hindmarsh, of Newcastle, obtained a patent, in February, 1827, for a contrivance to enable a capstan or windlass to be occasionally worked with increased mechanical advantage. With this view, he placed toothed wheel-work, partly in the drum-head of the capstan, and partly in the upper part of the barrel, upon which the cable is coiled and uncoiled in successive portions.

The drum-head, and also the barrel, turn loosely upon a central spindle, independent of each other, and are connected together either by the toothed gear, or by bolts. On raising or withdrawing the connecting pinion from the toothed wheels, and then locking the drum-head and barrel together, the capstan works with a power equal only to that exerted by the men at the capstan-bars, as an ordinary capstan; but on lowering the pinion into gear with the wheel-work, and withdrawing the bolts which locked the drum-head to the barrel, the power exerted by the men becomes increased in proportion to the diameter and number of teeth in the wheels and pinions.

Fig. 417 is the external appearance of this capstan. *Fig.* 416 a horizontal view of the toothed gear at the top of the barrel. The barrel, with the whelps *a a*, turn loosely upon a vertical spindle fixed into the deck of the vessel. The drum-head *b* also turns loosely upon the same spindle. The circular frame *c c*, in *fig.* 416, in which the axes of the toothed wheels *d d d* are mounted, is fixed to the central spindle. The rim *e e e*, with internal teeth, is made fast to the top of the barrel, and the pinion *f*, which slides upon the spindle, is connected to the drum-head.

416

When it is intended to work the capstan with ordinary power, the pinion *f* is raised up into the recess of the drum-head, by means of a screw *g*, *fig.* 417, which throws it out of gear with the toothed wheels, and it is then locked up by a pin *z*: the bolts *h h* are now introduced, for the purpose of fastening the drum-head and barrel together, when it becomes an ordinary capstan.

417

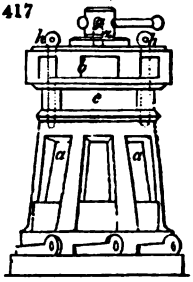

But when it is required that the same number of men shall exert a greater power, the bolts *h* are withdrawn, and the pinion *f* lowered into gear with the toothed wheels. The rotation of the drum-head, then carrying the pinion round, causes it to drive the toothed wheels *d d d*; and these working into the toothed rim *e e*, attached to the barrel, cause the barrel to revolve with an increasing power.

Thus, under particular circumstances, a smaller number of men at the capstan or windlass (which is to be constructed upon the same principle) will be enabled to haul in the cable and anchor, or warp off the vessel, which is an important object to be effected.

In 1819, Captain Phillips obtained a patent for certain improvements in capstans, a part of which invention is precisely the same as this in principle, though slightly varied in its adaptation.

James Brown, ship-rigger, in his capstan, patented in 1833, instead of applying the moving power by handspikes, having fixed two rims of teeth round the top of the capstan, acts upon them by a rotatory worm, or pinions turned by a winch.

418

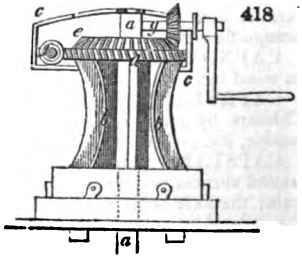

Fig 418 is an elevation of this capstan, and *fig.* 419 is a horizontal top view. *a* is an upright shaft, fixed firmly to the deck, serving as an axle round which the body of the capstan revolves. A frame *c*, fixed to the top of a stationary shaft *a*, above the body of the capstan, carries the driving apparatus.

The upper part of the body of the capstan has a ring of oblique teeth *d* formed round its edge; and above this, on the top of the capstan, is a ring of bevel teeth *e*. A horizontal shaft *f*, mounted in the top frame *c*, has a worm or endless screw, which takes into the teeth of the ring *d*; and a short axle *g*, having

Digitized by Google

its bearings in the central shaft *a*, and in the frame *c*, carries a bevel pinion, which takes into the bevel teeth of the ring *e*.

The bearings of the shaft *f*, in the top frame, are in long slots, with angular returns, something like the fastening of a bayonet, which is for the purpose of enabling the shaft to be readily lifted in and out of gear with the teeth of the ring *d*: the outer bearing of the axle *g* of the bevel pinion is also supported in the frame *c*, in a similar way, in order to put it in and out of gear with the teeth of the bevel ring *e*. A mode of shifting these is essential; because the two toothed rings, and their driving worm and pinion, give different speeds, and, of course, cannot be both in operation at the same time.

419

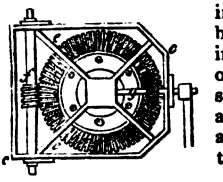

The worm of the shaft *f* being placed in gear with the teeth of the ring *g*, on applying rotatory power thereto, by means of winches attached to the ends of the shaft, the barrel or body of the capstan will be made to revolve with a slow motion, but with great power; and thus two men at the winches will do the same work as many men with capstan bars in the ordinary way.

If a quicker movement than that of the endless screw is desired, then the driving power may be applied by a winch to the axle *g* of the bevel pinion, that pinion being put into gear with the bevel ring *e*, and the endless screw withdrawn. It should, however, be here remarked, that the patentee proposes to employ two short axles *g*, placed opposite to each other, with bevel pinions acting in the bevel-toothed ring, though only one is shown in the figure to avoid confusion. He also contemplates a modification of the same contrivance, in which four short axles *g*, placed at right angles, with pinions taking into a bevel ring, may be employed, and made effective in giving rotatory motion to the barrel of a capstan by means of winches applied to the outer ends of the axle, and turned by the labour of four men.

CAPUT MORTUUM, literally, dead matter; a term employed by the alchemists to express the residuum of distillation or sublimation, the volatile portions having been driven off.

CARADOC SANDSTONE. The upper member of the Lower Silurian formation. See Murchison's "Silurian System."

CARAJURA. A red dye stuff: see **Chica Red.**

CARAMEL. Burnt or dried sugar, used for colouring spirits and gravies. It is a black, porous, shining substance, soluble in water, to which it imparts a fine dark-brown colour. The French are in the habit of dissolving the sugar, after it has been exposed for some time to temperature sufficiently high to produce the proper colour, in lime-water: this is sold under the name of "colouring."

CARAT. The term carat is said to be derived from the name of a bean, the produce of a species of *erythina*, a native of the district of Shangallas in Africa, a famous gold dust mart. The tree is called *kuara*, a word signifying sun in the language of the country, because it bears flowers and fruit of a flame colour. As the dry seeds of this pod are always of nearly uniform weight, the savages have used them from time immemorial to weigh gold. The beans were transported into India at an ancient period, and have been long employed there for weighing diamonds. The carat of the civilised world is, however, an imaginary weight, consisting of four nominal grains, a little lighter than four grains troy (*poids de marc*). It requires 74 carat grains and $\frac{1}{16}$th to equipoise 72 of the other.

It is stated that the *karat*, a weight used in Mecca, was borrowed from the Greeks, and was equal to the 24th of a denarius or denier. The Encyclopedists thus explain the *carat*:—"The weight that expresses the fineness of gold. The whole mass of gold is divided into 24 parts, and as many 24th parts as it contains of pure gold it is called gold of so many *carats*. Thus gold of twenty-two parts of pure metal is gold of twenty-two *carats*. The carat of Great Britain is divided into four grains; among the Germans into 12 parts; and among the French into 32." Among assayers, even in this country, the German division of the carat is becoming common.

CARBOLIC ACID. ($C^{12}H^6O^2$. *Syn. Phenic Acid, Phenole, Phenylic Alcohol, Hydrate of Phenyle.*) The less volatile portion of the fluids produced by distillation of coal tar contain considerable quantities of this substance. It may be extracted by agitation of the coal oils (boiling between 300° and 400°) with an alkaline solution. The latter, separated from the undissolved portion, contains the carbolic acid in the state of carbolate of the alkali. On addition of a mineral acid, the phenole is liberated, and rises to the surface in the form of an oil. To obtain it dry, recourse must be had to digestion with chloride of calcium, followed by a new rectification. If required pure, only that portion must be received which boils at 370°. If, instead of extracting the carbolic acid from coal products boiling between 300° and 400°, a portion be selected distilling

Digitized by Google

between 400° and 428°, and the same treatment as before be adopted, the acid which passes over between 347° and 349° will consist, not of carbolic acid, but of its homologue, cresylic acid, $C^{14}H^8O^2$. Commercial carbolic acid is generally very impure. Some specimens do not contain more than 50 per cent. of acids soluble in strong solution of potash. The insoluble portion contains naphthaline, fluid hydrocarbons, and small portions of chinoline and lepidine. Carbolic acid, when very pure and dry, is quite solid and colourless. The crystals often remain solid up to 95°, but a trace of water renders them fluid. Its specific gravity is 1·065. Carbolic acid, when mixed with lime and exposed to the air, yields rosolic acid. The lime acquires a rich red colour, during the formation of the acid. No means of dyeing reds permanently with this substance have yet been made known. Unfortunately, the red tint appears to require an excess of base to enable it to exist, consequently the carbonic acid of the air destroys the colour (*Dr. Angus Smith*). I find that homologues of carbolic acid exist which boil at a temperature beyond the range of the mercurial thermometer, and that all the acids above carbolic acid afford rosolic acid, or homologues of it, when treated with lime. Creosote of commerce appears to consist of a mixture of carbolic and cresylic acids. If only that portion be received which distils at the temperature given by Reichenbach as the boiling point of creosote, it will, if prepared from coal oil, consist almost entirely of cresylic acid (*Williamson* and *Fairlie*.). A splinter of deal wood, if dipped first in carbolic acid and then in moderately strong nitric acid, acquires a blue tint. For a comparison of the properties of Creosote and Carbolic Acid, see CREOSOTE.—C. G. W.

CARBON. (*Equivalent*, 6; hypothetical density of vapour 0·8290; combining measure one volume.) Carbon exists in a considerable variety of forms, most of which are so unlike each other, that it is not surprising the older chemists should have believed them to be compounds.

Diamond.—The purest variety of carbon is the diamond. This gem crystallises in octohedrons and derived forms. The diamond does not owe its hardness and brilliancy solely to its purity, for many specimens of graphite consist of carbon as free from admixture as the best diamonds. The density of graphite and diamond, however, is very different; for while the former seldom exceeds 2·45, and is often much lower, the diamond is very constant, generally ranging between 3·50 and 3·55. Diamonds, if they are perfectly transparent, leave no residue when burnt in oxygen gas. If not clear, they yield from 0·05 to 0·20 of ash, consisting chiefly of peroxide of iron, but also containing traces of silica. The refractive power of diamonds is as high as 2·439. Sir Isaac Newton, observing that oily or inflammable bodies generally possessed the greatest refractive powers, inferred from the high index of refraction of the diamond, that it was "an unctuous body congealed." This idea will appear the more happy, when it is considered that the ashes of the diamond exhibit a structure resembling that of vegetable parenchyma.

In freedom from ashes, certain graphites nearly approach the diamond, some natural varieties not yielding more than 0·33 per cent.

Graphite.—This kind of carbon is found in many parts of the world, and in different degrees of purity: it is also formed artificially. Some native varieties are exceedingly soft, of a black or greyish tint, metallic lustre, and, in consequence of making a streak on paper, of various degrees of blackness, according to the mode of preparation and other circumstances, are invaluable for the manufacture of artists' pencils, and hence called "BLACK LEAD."

A very hard graphite is found lining the retorts in which coal gas is made: it is, when cut into plates or rods, used in galvanic arrangements, either for the poles or the inactive elements of batteries. See GRAPHITE and PLUMBAGO.

Coke.—This variety of carbon is produced by the ignition of pit-coal. The largest quantities are produced in the manufacture of coal gas. It of course varies greatly in quality with the coal from which it is procured. The density of coke varies not only with the quality of the coal, but also with the greater or less rapidity of the firing and the duration of the operation. From 1·2 to 1·4 is a not uncommon range of density in gas-cokes tolerably free from ash. I find that a coke of the density 1·223 will have its specific gravity raised to 1·540, if the air in the interstices be removed by placing it in water, under the receiver of the air-pump. Some varieties of coke, such as those produced in the manufacture of gas from bituminous shales and cannel coals, leave an aluminous residue almost equal in bulk to the coke itself. See COKE.

Anthracite is a very dense natural variety of carbon, its specific gravity varying from 1·390 to 1·7. It differs considerably in quality, some kinds being almost as free from extraneous matters as graphite, while others approach nearer to the nature of coals. Thus the hydrogen in anthracite oscillates between 1·0 and 4·0. Some varieties of coal have only 4·5 to 5·0 per cent. of hydrogen, thus approximating to those anthracites which have high hydrogens. See ANTHRACITE.

Charcoal.—There are several varieties of charcoal: among them may be mentioned

Digitized by Google

those from wood, bones, and the peculiar substance found between the layers of certain pit coals, and known as mineral charcoal. Ordinary charcoal from wood contains many substances besides carbon, among which may be mentioned oxygen, hydrogen, traces of nitrogen, and ashes.

Bone charcoal contains a large quantity of earthy phosphates and carbonates, besides other matters. The mineral charcoal is merely a scientific curiosity. Charcoal is remarkable for its power of absorbing and oxidising animal and vegetable colouring matters, also for the property which it possesses of absorbing gases. The bleaching and disinfecting powers of charcoal appear to depend chiefly on some peculiarity in its structure, enabling it to condense oxygen in a manner somewhat resembling platinum black.

Animal charcoal is used as a bleaching agent in the form of coarse grains: when once used, it may be partially restored to activity by reburning; but, eventually, it becomes worthless for that purpose, and is then only fit for conversion into superphosphate of lime for manure, by the agency of sulphuric acid. Where acid solutions are to be decolorised by animal charcoal, it is necessary before use to remove the earthy phosphates, &c., by digestion with hydrochloric acid. It is essential that the purified charcoal should be washed with a great quantity of water, in order to remove the acid and the salts formed by its action. Advantage has been taken, by Dr. Stenhouse, of the absorbent power of charcoal, in order to prevent danger arising from putrid or offensive vapours. For this purpose he has contrived a charcoal respirator, which fulfils its intended office with remarkable success. See CHARCOAL.

For a description of the method of preparing the variety of carbon known as Lamp-Black, see LAMP-BLACK.

The description of the charcoal best adopted for pyrotechnic purposes will be found under the head GUNPOWDER.

Carbon combines with several elements, forming in general well marked and highly important substances. Several of these compounds will be found under the heads CARBONIC ACID, SULPHURET OF CARBON, HYDROCARBON, &c.

The quantities of charcoal yielded by various kinds of wood have been given by more than one experimenter; but the results are so widely different that no great value can be attached to them. It is evident that the most extreme care would be required in selecting the various woods and preparing them for analysis, if results were desired capable of being employed as standards for reference. Charcoal is extremely indestructible under ordinary circumstances; it is, therefore, usual to char stakes or piles of wood, which are to be employed for supporting buildings, or other erections in damp situations.

It will be seen, from what has already been said, that absolutely pure carbon is scarcely to be met with, even in the diamond. In determining the atomic weight of carbon by combustion of the diamond in oxygen, according to the method employed by MM. Dumas and Stas, it was always necessary to determine and allow for the ashes remaining after the combustion. The purest charcoal that can be obtained by the calcination of sugar for several hours at the highest temperature of a powerful blast furnace, contains oxygen and hydrogen, the former to the extent of about ½ per cent. and the latter 0·2.

Carbon, on uniting with sulphur, forms the curious fœtid volatile fluid known as bisulphide or sulphuret of carbon. In constitution it resembles carbonic acid, and it may, in fact, be considered as that gas in which the oxygen is replaced by sulphur. A new gas has been recently described by M. Baudrimont, bearing the same relation to carbonic oxide that bisulphide of carbon does to carbonic acid: its formula therefore is C S.

When certain hydrocarbons are treated alternately with chlorine and alkalies, substitution-compounds are formed, in which the hydrogen in the original substance is replaced by chlorine; thus olefiant gas (C^4H^4), by this mode of operating, yields C^4Cl^4. It is true that this formula might be written, for simplicity's sake, CCl, but such an expression would be incorrect; because, in the first place, it would not indicate its relation to the parent substance; and, in the next, it would not correspond to the, at present, almost universally received axiom, that an equivalent of an organic body is that quantity which is represented by four volumes of vapour.

A bromide of carbon exists; its mode of formation appears to be of a somewhat similar character to the chloride, for it is sometimes found in commercial bromine which has been prepared with the agency of ether. See BROMINE. It is doubtless formed by the gradual replacement, by bromine, of the hydrogen in the ethyle.—C. G. W.

CARBON, BISULPHIDE OF (formerly *Carburet of Sulphur* or *Sulphuret of Carbon*), also called by the elder chemists the *Alcohol of Sulphur*; a limpid volatile liquid possessing a penetrating fœtid smell and an acrid burning taste.

Digitized by Google

Bisulphide of carbon is prepared by distilling, in a porcelain retort, from pyrites, the bisulphide (bisulphuret) of iron, with a fourth of its weight of well dried charcoal, both in a state of fine powder and intimately mixed. The vapour from the retort is conducted to the bottom of a bottle filled with cold water to condense it. The equivalent of the bisulphide of carbon is 38; its formula CS^2.

The bisulphide of carbon is insoluble in water, but it is soluble in alcohol. It dissolves sulphur, phosphorus, and iodine. The solution of phosphorus in this liquid has been employed for electrotyping very delicate objects, such as grasses, flowers, feathers, &c. Any of these are dipped into the solution: by a short exposure in the air the bisulphide of carbon evaporates and leaves a film of phosphorus on the surfaces; they are then dipped into nitrate of silver, by which silver is precipitated in an exceedingly minute film, upon which, by the electrotype process, any thickness of silver, gold, or copper can be deposited. If a few drops of the bisulphide of carbon are put into a solution of the cyanide of silver, from which the metal is being deposited by the electroplating process, it covers the article quite brightly, whereas, without the bisulphide, the precipitated metal would be dull. See ELECTROTYPE.

CARBONATES. By this term is understood the salts formed by the union of carbonic acid with bases.

The carbonates are among the most valuable of the salts, whether we regard their physical, geological, chemical, or technical interest. Were limestone and marble the only carbonates familiarly known, they would be sufficient to stamp this class of salts as among the most important. The carbonates of lime, potash, soda, ammonia, and lead are articles of immense importance to the technologist, and are prepared on a vast scale for various purposes in the arts. The carbonates of iron and copper are the most valued ones of those metals. Numerous processes of separation in analysis are founded on the various degrees of solubility in water and certain reagents of the different carbonates. By taking advantage of this fact, baryta, strontia, and lime, may be separated from magnesia and the alkalies. There are few analytical problems which have attracted more attention than the accurate determination of the carbonic acid in the carbonates. This has partly arisen from the frequency with which the potashes, soda ashes, limestone, and other carbonates of commerce, are sent to chemists for analysis. The number of instruments contrived for the purpose is something extraordinary, especially when the simplicity and ease of the operation is considered. Among them all, there is none more convenient or easy to use than that of Parnell. "It consists of a glass flask (*fig.* 420) of about two ounces' capacity, fitted with a sound cork, through which two tubes pass, one serving to connect a chloride-of-calcium tube, *a*, while the other, *b*, will be described presently. A small test-tube, *c*, is so placed in the flask, and is of such a size, that it cannot fall down, but its contents may be made to flow out by inclining the apparatus to one side. To perform the experiment, a weighed quantity of the carbonate is placed in the flask, and water added up to the level seen in the figure; the test-tube is then filled nearly to the top with concentrated sulphuric acid, and is carefully lowered into the flask; the cork with the tubes attached is then affixed, the aperture *b* being closed with a small cork. The whole apparatus is now carefully weighed; the flask is then to be inclined so as to allow some of the acid to flow out, and, when the effervescence has subsided, a little more, and so on until no more carbonic acid is evolved. The flask is now to be so inclined as to cause the whole of the acid to mingle with the aqueous fluid, and thus cause a considerable rise of temperature; this expels the carbonic acid from the liquid; but as an atmosphere of the latter gas fills the flask, it must be removed and replaced by air, as the difference in density of the two is very considerable. For this purpose, the cork *b* is removed and air is sucked out of *d*, until it no longer tastes of carbonic acid; the flask is then allowed to become perfectly cold, and, the little cork being replaced, it is then re-weighed: the difference in the two weighings is the amount of carbonic acid in the specimen. On drawing air for some time through the apparatus, it begins slowly to acquire weight, arising from the moisture in the atmosphere being absorbed by the chloride of calcium, and although the error introduced by this means is too minute to effect ordinary experiment, it must not be neglected where, from the quantity of material in the flask being limited, or other causes, a small difference

420

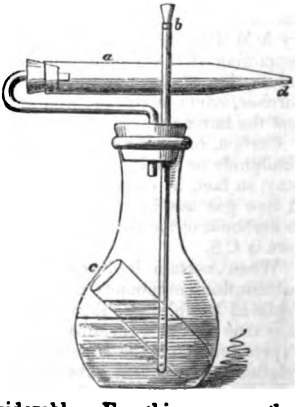

Digitized by Google

has an important bearing on the result. In this latter case another chloride-of-calcium tube is to be attached to the aperture *b*, and the air must be drawn through by means of a suction-tube applied at *d*."—C. G. W.'s *Chemical Manipulation*.

The commercial value of the carbonates of potash and soda may equally well be determined by ascertaining the quantity of dilute sulphuric acid required to neutralise them.

The following carbonates are such as find some use in the arts—or being found native are brought under the notice of the miner.

CARBONATE OF AMMONIA, COMMERCIAL. The sesquicarbonate of chemists, sal volatile or volatile or smelling salts of the shops. Bicarbonate of ammonia has been found in considerable quantities, forming crystalline masses, in a bed of guano on the western coast of Patagonia.

CARBONATE OF BARYTA. This mineral occurs in nature as the mineral *Witherite*, which frequently is found in lead mines.

CARBONATE OF CALCIUM, or LIME. Carbonate of lime is found abundantly in the mineral kingdom. Calcareous spar, arragonite, Iceland spar, limestone, chalk, and marble, are carbonates of lime. Its uses are well known. Gay-Lussite is a double carbonate of lime and soda.

CARBONATE OF COBALT. See COBALT.

CARBONATE OF COPPER. *Malachite* and *azurite* are the two carbonates of this metal found in nature. See COPPER.

CARBONATES OF IRON. *Spathic ore* is the most important native form which occurs. See IRON.

CARBONATE OF LEAD. *White lead ore* or *cerusite* is found in the lead mines of Cornwall, Devonshire, Cumberland, and Scotland. The pigment white lead is a carbonate of lead. See LEAD.

CARBONATE OF MAGNESIA. *Magnesite* occurs native associated with serpentine and other magnesian rocks. *Magnesia alba* of the pharmaceutists is a hydrocarbonate.

CARBONATE OF MANGANESE. This salt is found in nature in rose-coloured rhombohedra *manganese spar*.

CARBONATE OF NICKEL. A mineral *emerald nickel* occurs at Texas, in Pennsylvania, and at Unst, Shetland. This is the only native carbonate of this metal.

CARBONATE OF POTASH. Vegetable alkali, salts of tartar, pearl ashes, ashes, are several names given to this salt. See POTASH.

CARBONATE OF SILVER. See SILVER ORES.

CARBONATE OF SODA. Commonly called SODA : *which see*.

CARBONATE OF STRONTIUM. Occurs native as STRONTIANITE: it is found at Strontian in Argyleshire—hence its name ; in the Hartz and other localities.

All these and the other rarer carbonates will be described under their respective heads.

CARBONIC ACID. (*Equivalent*, 22. CO^2.) A compound of carbon and oxygen. The formula of carbonic acid, as generally received, is CO^2, but such an expression is doubtless incorrect. In the first place, there are several good reasons for supposing carbonic acid to be bibasic. If, moreover, we must have some definition of an equivalent, and the necessity for some rule on the subject is obvious, we can find none so convenient, so much in harmony with chemical phenomena generally, as that which insists on the universality of four-volume formulæ for the compounds of carbon, or, in other words, organic substances. In this case carbonic oxide becomes represented by C^2O^2 and carbonic acid by C^2O^4.

Carbonic acid is destitute of colour, has a sour smell, and an acidulous pungent taste ; it imparts to moist, but not dry, litmus-paper a transient reddish tint, and weighs, per 100 cubic inches, 47·19 grains, and per cubic foot, 815·44 grains, a little more than 3¾ oz. avoirdupois. It may be condensed into the liquid state by a pressure of 40 atmospheres ; and this liquid may then be solidified by its own sudden spontaneous evaporation. If air contains more than 15 per cent. in bulk of this gas, it becomes unfit for respiration and combustion, animal life and burning bodies being speedily extinguished by it.

Carbonic acid is constantly given off by animals during respiration ; and ordinary combustion being the combination of carbon with oxygen, this acid is formed in enormous quantities in all our manufactories and by our ordinary fires.

Carbonic acid is consequently continually being poured into the air. The purity of the atmosphere is, however, maintained by the action of the vegetable world, all plants removing carbonic acid from the air, and, under the influence of light, decomposing it again into carbon, which goes to the formation of wood, and oxygen, which is given out to the atmosphere.

Notwithstanding this beautiful provision of Nature, we find carbonic acid accumu-

Digitized by Google

lating in caverns, deep wells, and long-closed cellars, rendering them dangerous. It is the "bad air" and "damp" of the metal miner, the "choke damp," "after damp," and "stythe" of the coal miner. The two last terms are especially employed to express the suffocating vapour which follows an explosion of "fire-damp." This gas, being much denser than common air, can be pumped out of any place containing it. Milk of lime—quicklime mixed with water—may be used with advantage to purify the air of a sunk apartment, by its affinity for, or power of absorbing this aërial acid.

In the actual condition of the atmosphere, from 4 to 6 volumes of carbonic acid exist in every 10,000 volumes of air. This acid gives the fresh and pleasant taste to spring-water and to all fermented drinks.

Many springs are very highly charged with this acid, and form a sparkling beverage, as Seltzer water (*Selterswasser*) and the like. Large quantities of similar water are made artificially in this country, and sold under the names of Soda Water, Aërated Water, &c.—See Watts' "Dictionary of Chemistry."

CARBO-HYDRIDE, commonly HYDROCARBON. A term used to denote those bodies which consist of carbon and hydrogen only. The number of hydrocarbons now known is very great, and the list is increasing every day. They were very little understood until lately, but so much has now been done that the anomalies and difficulties attending their history are rapidly disappearing. Although the number of individual bodies is, as has been said, very considerable, they are derived from a few great families. The principal are the following:—

Homologues of Olefiant gas.
" Methyle.
" Marsh gas.
" Benzole.
" Naphthaline.
Isomers of Turpentine.

The other families which yield hydrocarbon derivatives are less important than the above, and will not be noticed here.

It is curious that the destructive distillation of organic matters is, of all operations, the most fruitful source of these bodies. Coal yields a great number, the nature varying with the temperature. When ordinary coals are distilled at very high temperatures, as in the production of gas, hydrocarbons belonging to the first four families are produced, and also a considerable quantity of naphthaline; but when, on the other hand, they are distilled at as low a heat as is compatible with their thorough decomposition, they yield fluid hydrocarbons, principally belonging to the first two classes, accompanied, however, by a considerable quantity of paraffine. The homologues of olefiant gas have acquired extreme interest, owing to the brilliant results obtained by MM. Berthelot, and De Luca, by Cahours, and Hofmann in the study of their derivatives. The homologues of methyle have attracted considerable attention, in consequence of the successful isolation, by MM. Frankland and Kolbe, of the singular group of hydrocarbons known as the organic radicals, and which, until then, were regarded as hypothetical bodies, existing only in combination.

The hydrocarbons homologues with benzole not only exist in considerable quantity in ordinary coal naphtha, but are produced in a great variety of interesting reactions. Those at present known are contained in the following Table:—

Table of the Physical Properties of the Benzole Series.

Name.	Formula.	Boiling point.	Specific gravity.	Specific Gravity of Vapour.	
				Experiment.	Theory.
Benzole - -	$C^{12}H^{6}$	176	0·850	2·77	2·699
Toluole - -	$C^{14}H^{8}$	230	0·870	3·26	3·183
Xylole - -	$C^{16}H^{10}$	259	- -	- -	3·668
Cumole - -	$C^{18}H^{12}$	298	- -	3·96	4·150
Cymole - -	$C^{20}H^{14}$	347	0·861	4·65	4·636

Benzole has already been sufficiently described, and will not, therefore, be further alluded to. All these hydrocarbons yield a great number of derivatives, when treated with various reagents. By first treating them with strong nitric acid, so as to obtain nitro-compounds, that is to say, the original substance in which an equivalent of hydrogen is replaced by hyponitric acid (NO^4), strongly odorous oils are produced. When treated with sulphide of ammonium or protacetate of iron, these oils become reduced, and yield a very interesting series of volatile organic

Digitized by Google

bases or alkaloids; these are aniline, toluidine, xylidine, cumidine, and cymidine. Mr. Barlow has shown that special precautions are necessary in converting cymole into nitrocymole, preparatory to the formation of the alkaloid cymidine. Cymole is acted on too violently by nitric acid to allow of the nitro-compound being formed, unless the precaution is taken of cooling the acid and hydrocarbon, by means of a freezing mixture, before allowing them to react on each other. The nitro-compound when well formed, may be reduced in the ordinary manner. These alkalies have lately acquired special importance in consequence of the valuable dyes that Mr. Perkins has succeeded in producing from them. See ANILINE.

Paraffine is a solid hydrocarbon of great interest; it is found both in wood and coal tar. When coal is distilled for the purpose of producing gas, the temperature is so high as to be unfavourable for its production, and consequently mere traces only are found in ordinary coal tar. But if any kind of coal be distilled at the lowest possible temperature, not only is the resulting naphtha of much lower density than that produced in the ordinary manner, but considerable quantities of paraffine are found in the distillate. The last-mentioned substance is every day becoming more important, in consequence of the valuable illuminating properties that have been found to belong to it. Colourless, inodorous, hard at all moderate temperatures, it forms the most elegant material for candles yet discovered. See PARAFFINE.

Modern researches have shown that the hydrocarbons generally are formed on one type—viz., hydrogen. Assuming hydrogen in the free state to be a double molecule, HH, the hydrocarbons are formed by the substitution of one or two equivalents of a positive or negative radical for one or two of the equivalents of hydrogen; thus methyle, the formula of which (for four volumes) is $\frac{C^2H^3}{C^2H^3}$ or C^4H^6, is hydrogen in which both equivalents are reflected by methyle. Olefiant gas is hydrogen in which one equivalent is replaced by the negative radical acetyle, or vinyle, and so on.

There is one large class of hydrocarbons the rational formulæ for which are not known, and which will probably remain in this condition for some time. We allude to the numerous essential oils isomeric with oil of turpentine. Many of these have almost the same boiling point and precisely the same vapour density as their type; but in odour, fluidity, density in the liquid state, and various other minor points, are essentially different. The following Table exhibits some of their physical properties:—

Table of the Physical Properties of some Isomers of Oil of Turpentine.

Name.	Formula.	Boiling Point.	Specific gravity.	Specific gravity of vapour.	
				Experiment.	Theory.
		°			
Oil of turpentine	$C^{20}H^{16}$	322	0·864	4·764	4·706
„ athamanta	$C^{20}H^{16}$	325·4	0·843	- -	do.
„ bergamot	$C^{20}H^{16}$	361·4	0·869	- -	do.
„ birch tar	$C^{20}H^{16}$?	313·0	0·847	5·28	do.
Caoutchine	$C^{20}H^{16}$?	338·0	0·842	4·46	do.
Oil of carui, or caruene	$C^{20}H^{16}$	343·4	- -	- -	do.
„ lemon	$C^{20}H^{16}$	343·4	0·8514	4·87	do.
„ copaiva	$C^{20}H^{16}$	473·0	0·878	- -	do.
„ cubebs	$C^{20}H^{16}$	490·0	0·929	- -	do.
„ elemi	$C^{20}H^{16}$	345·2	0·849	- -	do.
„ juniper	$C^{20}H^{16}$	320·0	- -	- -	do.
Terebric oil accompanying oil of gaultheria	$C^{20}H^{16}$	320·0	- -	4·92	do.
Terebric oil in clove oil	$C^{20}H^{16}$	483·8	0·9016	- -	do.
„ „ pepper	$C^{20}H^{16}$	332·0	0·864	4·73	do.
„ „ balsam of tolu	$C^{20}H^{8}$	320·0	0·837	- -	do.
„ „ oil of valerian	$C^{20}H^{16}$	320·0	- -	4·60	do.

An inspection of the above Table will show that while, beyond doubt, a great number of essential oils are truly isomeric with turpentine, there are some the constitution of which is by no means well established.

The above account of some of the more prominent hydrocarbons is necessarily brief and imperfect; partly because the limits of this work preclude the possibility of entering minutely into the details of their history, and partly because many of them are described at greater length in other articles, especially under naphtha.—C. G. W.

Digitized by Google

CARBONIFEROUS SYSTEM. That geological formation which, in order of time, succeeds the OLD RED SANDSTONE, and is succeeded by the PERMIAN, or by the NEW RED SANDSTONE. The carboniferous system comprehends:

The Lower Coal Measures, or Carboniferous Slates. The Mountain or Carboniferous Limestone. The Millstone Grit Formation. The Upper Coal Measures.

CARBONIC OXIDE. (*Equivalent* 14. CO.) Carbonic acid is readily deprived of half its oxygen at a red heat by a variety of substances, and so reduced to carbonic oxide.

This gas is presumed to contain two volumes of carbonic vapour and one volume of oxygen condensed into two volumes, so that its combining measure is two volumes. Carbonic oxide is 14 times heavier than hydrogen. It is very fatal to animals, and when inspired in a pure state almost immediately produces coma. It has never been liquefied. It is easily kindled, and burns with a pale blue flame like that of sulphur, combining with half its volume of oxygen, and forming carbonic acid, which retains the original volume of the carbonic oxide. This combustion is often witnessed in a coke or charcoal fire. The carbonic acid produced in the lower part of the fire is converted into carbonic oxide as it passes up through the hot embers, and afterwards burns with a pale-blue flame where it meets the air.—*Graham.*

CARBURETTED HYDROGEN. A compound of carbon and hydrogen. See COAL GAS, and consult Watts' "Dictionary of Chemistry."

CARBUNCLE. A gem much prized by the ancients, and in high repute during the middle ages, from its supposed mysterious power of emitting light in the dark. Benvenuto Cellini affirms, in his treatise on jewellery, that he had seen the *carbuncle glowing like a coal with its own light.*

"The garnet was, in part, the carbunculus of the ancients, a term probably also applied to the spinel and oriental ruby. The Alabandic carbuncles of Pliny were so called because cut and polished at Alabanda. Hence the name Almandine now in use. Pliny describes vessels of the capacity of a pint formed from carbuncles, 'non claros ac plerumque sordidos ac semper fulgoris horridi,' devoid of lustre and beauty of colour,—which probably were large common garnets."—*Dana.*

CARD, CARDBOARD, called also *pasteboard*, from the circumstance that several sheets of paper are pasted together to form the board or card, which is then subjected to very great pressure between rollers.

A patent machine for cutting cards was invented by Mr. Dickinson. It consists of a pair of rollers with circular revolving cutters, the edges of which are intended to act against each other as circular shears; and the pasteboards, in passing between these rollers, are cut by the circular shears into cards of the required dimensions. These rollers are mounted in suitable standards with proper adjustments, and are made to revolve by a band and pulley connected to the axle of a crank, or by any convenient means. *Fig.* 421 is a front view of this machine: *a a* and *b b* are the two rollers, the upper one turning upon an extended axle, bearing in the standards, the lower one upon pivots. These rollers are formed by a series of circular blocks, between a series of circular steel cutters, which are slidden on to iron shafts, and held together upon their axle by nuts screwed up at their ends. The accurate adjustment of the cutters is of the first importance to their correct performance; it is therefore found necessary to introduce spiral springs within the blocks, in order to press the cutters up to their proper bearings. A section of one of the blocks is shown at *fig.* 422, and an end view of the same at *fig.* 423, with the spiral springs inserted.

421

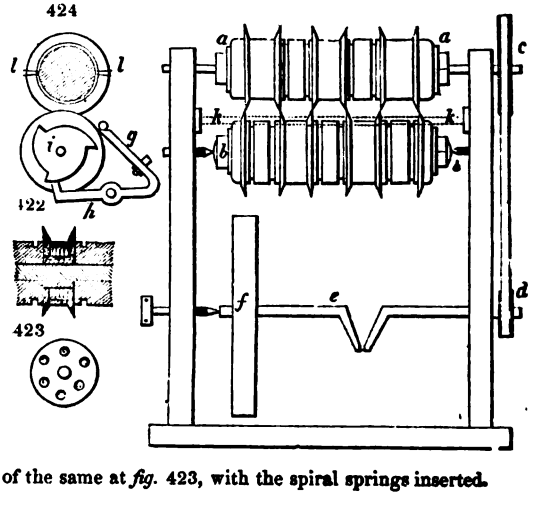

Digitized by Google

At the outer extremity of the axle of the roller *a*, a rigger *c*, is attached, whence a band passes to a pulley *d*, on the crank shaft *e*, to which a flywheel *f*, is affixed, for the purpose of rendering the action uniform. Rotatory motion being given to the crank shaft, the upper roller is turned, the lower roller moving at the same time by the friction against the edges of the cutters.

Fig. 424 is an end view of the rollers, showing the manner in which the pasteboards are guided and conducted between the cutters. In front of the machine a movable frame *g*, is to be placed, for the purpose of receiving the pasteboards, preparatory to cutting them into cards, and a stop is screwed to this frame for the edge of the pasteboard to bear against, which stop is adjustable to suit different sizes. From the back part of this frame an arm *h*, extends, the extremity of which acts against the periphery of a ratchet wheel *i*, fixed at the end of the roller *b*, and hence, as the roller goes round, the frame is made to rise and fall upon its pivots, for the purpose of guiding the pasteboard up to the cutters; at the same time a rod *k*, hanging in arms from the sides of the standards (shown by dots in *fig.* 421), falling upon the pasteboard, confines it, while the cutters take hold, and racks, corresponding with the indentations of the rollers, are placed as at *l l*, by means of which the cards, when cut, are pushed out of the grooves.

As various widths of cards will require to be cut by this machine, the patentee proposes to have several pairs of rollers ready adjusted to act together, when mounted in the standards, in preference to shifting the circular cutters, and introducing blocks of greater or less width.

The second part of the invention is a machine for pasting the papers, and pressing the sheets together to make pasteboard. This machine consists of several reels on which the paper is to be wound, along with a paste trough, and rotatory brushes.

Damped paper is to be wound upon two reels, and conducted from thence over two other reels. Two fluted rollers revolving in the paste trough supply paste to two circular brushes; by these brushes the papers are to be pasted upon one side, and then pressed together by rollers to make the pasteboard; after this, the pasteboard is drawn on to a table, and it remains there until sufficiently dry to be wound upon other rollers, by which it is subjected to the necessary pressure. Cards are glazed or enamelled by the use of porcelain-clay, white lead, and subnitrate of bismuth.

CARDS (*Cardes*, Fr.; *Karden*, Germ.) are instruments which serve to disentangle the fibres of wool, cotton, or other analogous bodies, to arrange them in an orderly lap of fleece, and thereby prepare them for being spun into uniform threads. The fineness and the levelness of the yarn, as well as the beauty of the cloth into which it enters, depend as much on the regularity and perfection of the carding, as upon any subsequent operations of the factory. The quality of the carding depends more upon that of the cards than upon any attention or skill in the operative, since it is now nearly an automatic process, conducted by young women called card-tenters.

Cards are formed of a sheet or fillet of leather pierced with a multitude of small holes, in which are implanted small staples of wire with bent projecting ends called *teeth*. Thus every piece of wire is double toothed. The leather is afterwards applied to a flat or cylindrical surface of wood or metal, and the co-operation of two or more such surfaces constitutes a card. The teeth of cards are made thicker or slenderer, according as the filaments to be carded are coarser or finer, stiffer or more pliant, more valuable or cheaper. It is obviously of great importance that the teeth should be all alike, equably distributed, and equally inclined over the surface of the leather a degree of precision which is scarcely possible with handwork. To judge of the difficulty of this manipulation, we need only inspect the annexed figures, 425, 426. The wire must first be bent at right angles in *c* and *d*, *fig.* 427, then each branch must receive a second bend at *a* and *b* at a determinate obtuse angle, invariable for each system of cards. It is indispensable that the two angles *c a e* and *d b f* be mathematically equal, not only as to the twin teeth of one staple, but through the whole series: for it is easy to see that if one of the teeth be more or less sloped than its fellow, it will lay hold of more or less wool than it, and render the carding irregular. But though the perfect regularity of the teeth be important, it is not the sole condition towards making a good card. It must be always kept in view that these teeth are to be implanted by pairs in a piece of leather, and kept in it by the cross part *c d*. The leather must therefore be pierced with twin holes at the distance *c d*: and pierced in such a manner that the slope of the holes, in reference to the plane of the leather, be invariably the same; for otherwise the length of the teeth would vary with this angle of inclination, and the card would be irregular.

A third condition essential towards producing perfect regularity, is that the leather ought to be of the same thickness throughout its whole surface, otherwise the teeth, though of the same length and fixed at the same angle, would be rendered unequal by the different thicknesses of the leather, and the operation of carding would be in

Digitized by Google

consequence extremely defective. *Fig.* 425 shows the card-teeth acting against each other, as indicated by the arrows in two opposite directions; in *fig.* 426 they work one way.

Of late years very complex but complete and well-acting machines have been constructed for splitting the leather or equalising it by shaving, for bending and cutting the wires, and implanting them in the leather, into holes pierced with perfect regularity. Card machines which fashion the teeth with great precision and rapidity, and

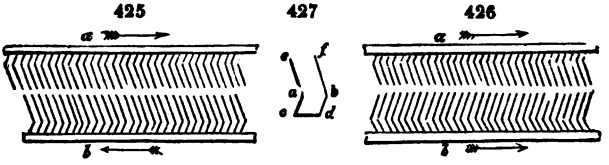

pierce the leather, have been for a considerable time in use at Halifax, in Yorkshire, a town famous for the excellence of its card-cloth, as also Leeds, Glasgow, and several other places. The wires and the leather thus prepared are given out by the manufacturer to women and children, who put them together.

The simplest machine for equalising the leather which can be employed, is that of MM. Scrive of Lille, where the leather is drawn forwards by a roller over a solid horizontal table, or bed, and passed under a nicely adjusted vertical blade, which shaves it by a scraping motion to a perfectly uniform thickness. About one-half the weight of the leather is lost in this process and in the subsequent squaring and trimming.

A machine for making cards, invented by a Mr. Ellis of the United States, for which a first patent was obtained in this country by Joseph Cheeseborough Dyer, Esq., of Manchester, in 1811, and a second and third with further improvements in 1814 and 1824, is one of the most elegant automatons ever applied to productive industry. It is however necessarily so complicated with different mechanisms as to render its representation impracticable in such engravings as are compatible with the scope of this dictionary. The following general description of its constituent parts must therefore suffice.

The first thing to be done after having, as above, prepared the long sheets or fillets of leather of suitable length, breadth, and thickness, for making the cards, is to stretch the leather, and hold it firmly; which is accomplished by winding the fillet of leather upon the roller or drum, like the warp roller of a loom, and then conducting it upwards, between guide rollers, to a receiving or work roller at the top of the machine, where the fillet is held fast by a cramp, by which means the leather is kept stretched.

Secondly, the holes are pierced in the leather to receive the wire staples or teeth of the card, by means of a sliding fork, the points of which are presented to the face of the leather; while the fork is made to advance and recede continually, by the agency of levers worked by rotatory cams upon a revolving main shaft.

The points of the fork being thus made to penetrate into the leather, the holes for receiving the staples are pierced, at regular distances and in correct order, by shifting the leather fillet so as to bring different parts of its surface opposite to the points of the sliding fork. This is done by cams, or indented wheels and gear, which shift the guide rollers and confining drums laterally, as they revolve, and consequently move the fillet of leather at intervals a short distance, so as to present to the points of the fork or piercer at every movement, a different part of the surface of the leather.

Thirdly, the wire of which the teeth or points of the card are to be made, is supplied from a coil on the side of the machine, and is brought forward at intervals, by a pair of sliding pincers, which are slidden to and fro through the agency of levers actuated by rotatory cams upon the main shaft. The pincers having advanced a distance equal to the length of wire intended to form one staple, or two points, this length of wire is pressed upon exactly in the middle by a square piece of steel, and being there confined, a cutter is brought forward, which cuts it off from that part of the wire held in the pincers.

The length of wire thus separated and confined is now, by a movement of the machine, bent up along the sides of the square steel holder, and shaped to three edges of the square, that is, formed as a staple; and in the same way, by the continued movements of the machine, a succession of pieces of wire are cut off, and bent into staples for making the teeth of the card as long as the mechanism is kept in action.

Fourthly, the wire staple thus formed is held with its points or ends outwards, closely

Digitized by Google

contiguous to the forked piercer described above, and by another movement of the mechanism the staple is protruded forward, its end entering in the two holes made previously in the leather by sliding of the fork.

While the wire staple is being thus introduced into the leather, its legs or points are to be bent, that is, formed with a knee or angle, which is the fifth object to be effected. This is done by means of a small apparatus consisting of a bar or bed, which bears up against the under side of the wire staple when it has been passed half-way into the holes in the leather, and another bar above it, which being brought down behind the staple, bends it over the resisting bar to the angle required; that is, forms the knee in each leg. A pusher now acts behind the staple, and drives it home into the leather, which completes the operation.

The leather being thus conducted, and its position shifted before the piercer progressively, a succession of the above-described operations of cutting the wire, forming the staple, passing it into the leather, and bending its legs to the angular form, produces a sheet of card of the kind usually employed for carding or combing wool, cotton, and other fibrous materials. It may be necessary to add, that as these wire staples are required to be set in the leathers, sometimes in lines crossing the sheet, which is called ribbed, and at other times in oblique lines, called twilled, these variations are produced by the positions of the notches or steps upon the edge or periphery of the cam or indented wheel, which shifts the guide rollers that hold the fillet or sheet of leather as already described.

CARDS, PLAYING. (*Cartes à jouer*, Fr.; *Karten*, Germ.) Playing cards were probably invented in the East. In Italy cards originally bore the name of *naibi*, and, they are still, in Spain and Portugal, called *naipes*, signifying, in the Oriental languages, *divination*. Cards were first painted by hand: the art of printing cards was discovered in Germany between 1350 and 1360. It has been stated that cards were in use in Spain in 1332: in 1387, John I., King of Castile, prohibited their use. In France, we find that card-playing was practised in 1361; and at the end of the 14th century, we find Charles VI. amusing himself with cards during his sickness. The figures on modern cards are of French origin, and are said to have been invented between 1430 and 1461.

Mr. de la Rue obtained, in February, 1832, a patent for certain improvements in the manufacture of playing cards, which he distributed under three heads: first, printing the pips, and also the picture or court-cards, in oil colours, by means of types or blocks; secondly, effecting the same in oil colours by means of lithography; and thirdly, gilding or silvering borders, and other parts of the characters, by the printing process, either by types, blocks, or lithography.

In the ordinary mode of manufacturing playing cards, their devices are partly produced by copperplate printing, and they are filled up with water colours by the means called stencilling.

The patentee does not purpose any material alteration in the devices or forms upon the cards, but only to produce them with oil colours; and, to effect this, he follows precisely the same mode as that practised by calico printers.

A set of blocks or types, properly devised, are produced for printing the different pips of hearts, diamonds, spades, and clubs, or they are drawn, as other subjects, in the usual way, upon stone. The ink, or colour, whether black or red, is to be prepared from the best French lamp-black, or the best Chinese vermilion ground in oil, and laid on the types and blocks, or on the stone, in the same way as printer's ink, and the impressions taken on thick drawing-paper, by means of a suitable press, in the ordinary manner of printing.

The picture or court-cards are to be produced by a series of impressions in different colours, fitting into each other exactly in the same way as in printing paper hangings, or silks and calicoes, observing that all the colours are to be prepared with oil.

For this purpose a series of blocks or types are to be provided for each subject, and which, when put together, will form the whole device. These blocks are to be used separately, that is, all the yellow parts of the picture, for instance, are to be printed at one impression, then all the red parts, next all the flesh colour, then the blue portions, and so on, finishing with the black outlines, which complete the picture.

If the same is to be done by lithography, there must be as many stones as there are to be colours, each to print its portion only; and the impression, or part of the picture, given by one stone must be exactly fitted into by the impression given from the next stone, and so on until the whole subject is complete.

A superior kind of card is proposed to be made, with gold or silver devices in parts of the pictures, or gold or silver borders round the pips. This is to be effected by printing the lines which are to appear as gold or silver, with gilder's size, in place of ink or colour; and immediately after the impression has been given, the face of the card is to be powdered over with gold dust, silver, or bronze, by means of a soft

Digitized by Google

cotton or wool dabber, by which the gold, silver, or bronze will be made to adhere to the picture, and the superfluous portions of the metal will wipe off by a very slight rubbing. When the prints are perfectly dry, the face of the card may be polished by means of a soft brush.

If it should be desirable to make these improved cards to resemble ivory, that may be done by preparing the face of the paper in the first instance with a composition of size and fine French white, and a drying oil, mixed together to about the consistence of cream; this is to be washed over the paper, and dried before printing, and when the cards are finished they will exactly resemble ivory.

The only thing remaining to be described, is the means by which the successive impressions of the types, blocks, or stones forming the parts of the pictures, are to be brought exactly to join each other, so as to form a perfect whole design when complete; this is by printers called registering, and is to be effected much in the usual way, by points in the tympan of the press, or by marks upon the stones.

The parts of the subject having been all accurately cut or drawn to fit, small holes are to be made with a fine awl through a quire or more of the paper at once, by placing upon the paper a gauge-plate, having marks or guide-holes, and by observing these, the same sheet laid on several times, and always made to correspond with the points or marks, the several parts of the picture must inevitably register, and produce a perfect subject.

Of PLAYING CARDS, 36,254 dozen packs were *imported* in 1864, valued at 7,250*l.*, while we exported 528 cwts. valued at 5,628*l.*

CARDAMOM. The fruit of the *Elettaria cardamomum*, or the true officinal cardamom. Cardamoms are produced naturally and by cultivation in Malabar, at Travancore, and the western part of Soonda. The Malabar cardamoms are distinguished in commerce as *shorts*, *short-longs*, and *long-longs*. The three sorts are brought from Bombay in chests, the *shorts* fetching from 3*d.* to 6*d.* per lb. more than the longs.

The small cardamom was analysed in 1834 by Trommsdorff; he obtained the following results:—Essential oil, 4·6; fixed oil, 10·4; a salt of potash combined with colouring matter, 2·5; fecula, 3·0; nitrogenous mucilage with phosphate of lime, 1·8; yellow colouring matter, 0·4; and woody fibre, 77·3.

Cardamom seeds are employed medicinally, and for flavouring cordials.

Of CARDAMOMS, 88,561 lbs. were imported in 1864, the computed real value of which was 20,200*l.*

CARLE. A sort of hemp.

CARLOCK. The name given by the Russians to the isinglass obtained from the air-bladder of the sturgeon.

CARMEL. A substance used by confectioners for covering sweetmeats.

CARMINE. CARMINIC ACID. (*Carmin*, Fr.; *Karminstoff*, Germ.) The colouring matter of the cochineal insect. See COCHINEAL.

There are several methods of preparing carmine, the following being the most approved:—Dr. Pereira speaks highly of this process. A decoction of the black cochineal is made in water; the residue, called *carmine grounds*, is used by paper-stainers. To the decoction is added a precipitant, usually bichloride of tin. The decoction to which the bichloride has been added is put into a shallow vessel and allowed to rest. Slowly a deposit takes place, which adheres to the sides of the vessel, and the liquid being poured off, it is dried: this precipitate is carmine. The liquid, when concentrated, is called *liquid rouge*.

By the *Old German Process*, carmine is prepared by means of alum without any other addition. As soon as the water boils, the powdered cochineal is thrown into it, stirred well, and then boiled for six minutes; a little ground alum is added, and the boiling is continued for three minutes more. The vessel is removed from the fire, the liquor is filtered, and left for three days in porcelain vessels, in the course of which time a red matter falls down, which must be separated and dried in the shade. This is carmine, which is sometimes previously purified by washing. The liquor, after three days more, lets fall an inferior kind of carmine; but the residuary colouring matter may also be separated by the muriate of tin.

The proportions for the above processes are 580 parts of clear river water, 16 parts of cochineal, and 1 part of alum: there is obtained from 1½ to 2 parts of carmine.

Another *Carmine with Tartar.*—To the boiling water the cochineal is added, and after some time a little cream of tartar; in eight minutes more we add a little alum, and continue the boiling for a minute or two longer. Then take it from the fire and pour it into glass or porcelain vessels; filter, and let it repose quietly till the carmine falls down. We then decant and dry in the shade. The proportions are 8 lbs. of water, 8 oz. of cochineal, ½ oz. of cream of tartar, ¾ oz. of alum, and the product is an ounce of carmine.

The Process of Alxon or Langlois.—Boil two pails and a half of river water (30 pints), throw into it, a little afterwards, a pound of cochineal, add a filtered solution of six drachms of carbonate of soda and a pound of water, and let the mixture boil for half an

Digitized by Google

hour: remove the copper from the fire, and let it cool, inclining it to one side. Add six drachms of pulverised alum, stir with a brush to quicken the solution of the salt, and let the whole rest 20 minutes. The liquor, which has a fine scarlet colour, is to be carefully decanted into another vessel, and there is to be put into it the whites of two eggs well beat up with half a pound of water. Stir again with a brush. The copper is replaced on the fire, the alumina becomes concrete, and carries down the colouring matter with it. The copper is to be taken from the fire, and left at rest for 25 or 30 minutes, to allow the carmine to fall down. When the supernatant liquor is drawn off, the deposit is placed upon filter-cloth stretched upon a frame to drain. When the carmine has the consistence of cream cheese, it is taken from the filter with a silver or ivory knive, and set to dry upon plates, covered with paper to screen it from dust. A pound of cochineal gives in this way an ounce and a half of carmine.

Process of Madame Cenette of Amsterdam, with salt of sorrel.—Into six pails of river water boiling hot, throw two pounds of the finest cochineal in powder; continue the ebullition for two hours, and then add 3 oz. of refined saltpetre, and after a few minutes 4 oz. of salt of sorrel. In ten minutes more take the copper from the fire, and let it settle for four hours; then draw off the liquor with a siphon into flat plates, and leave it there for three weeks. Afterwards there is formed upon the surface a pretty thick mouldiness, which is to be removed dexterously in one pellicle by a slip of whalebone. Should the film tear and fragments of it fall down, they must be removed with the utmost care. Decant the supernatant water with a siphon, the end of which may touch the bottom of the vessel, because the layer of carmine is very firm. Whatever water remains must be sucked away by a pipette. The carmine is dried in the shade and has an extraordinary lustre.

Carmine by the Salt of Tin, or the Carmine of China.—Boil the cochineal in river water, adding some Roman alum; then pass through a fine cloth to remove the cochineal, and set the liquor aside. It becomes brighter on keeping. After having heated this liquor, pour into it, drop by drop, solution of tin till the carmine be precipitated. The proportions are one pailful of water, 20 oz. of cochineal, and 60 grains of alum, with a solution of tin containing 4 oz. of the metal.

To make Ordinary Carmine.—Take 1 pound of cochineal in powder; 3 dracnms and a half of carbonate of potash; 3 drachms of alum in powder; 3 drachms and a half of fish-glue.

The cochineal must be boiled along with the potash in a copper containing five pailfuls of water (60 pints); the ebullition being allayed with cold water. After boiling a few minutes the copper must be taken from the fire, and placed on a table at such an angle as that the liquor may be conveniently transvased. The pounded alum is then thrown in, and the decoction is stirred: it changes colour immediately and inclines to a more brilliant tint. At the end of fifteen minutes the cochineal is deposited at the bottom, and the bath becomes as clear as if it had been filtered. It contains the colouring matter, and probably a little alum in suspension. We decant it then into a copper of equal capacity, and place it over the fire, adding the fish-glue dissolved in a great deal of water, and passed through a searce. At the moment of ebullition, the carmine is perceived to rise up to the surface of the bath, and a coagulum is formed, like what takes place in clarifications with whites of egg. The copper must be immediately taken from the fire, and its contents be stirred with a spatula. In the course of fifteen or twenty minutes the carmine is deposited. The supernatant liquor is decanted, and the deposit must be drained upon a filter of fine canvas or linen. If the operation has been well conducted, the carmine when dry crushes readily under the fingers. What remains after the precipitation of the carmine is still much loaded with colour, and may be employed very advantageously for carminated lakes. See LAKE.

There is sold at the shops different kinds of carmine, distinguished by numbers, and possessed of a corresponding value. The difference depends upon two causes, either upon the proportion of alumina added in the precipitation, or of a certain quantity of vermilion put in to dilute the colour. In the first case the shade is paler, in the second it has not the same lustre. It is always easy to discover the proportion of the adulteration. By availing ourselves of the property of pure carmine to dissolve in water of ammonia, the whole foreign matter remains untouched, and we may estimate its amount by drying the residuum.

Carmine is, according to Pelletier and Caventou, a triple compound of the colouring substance and an animal matter contained in cochineal, combined with an acid added to effect the precipitation. The most successful investigator into the colouring matter of the cochineal has been Mr. Warren de la Rue. This chemist had the opportunity of submitting the living insect to microscopical examination. He found it to be covered with a white dust, which was likewise observed on the adjacent parts of the cactus leaves on which the animal feeds. This dust, which he considered to be the excrement of the animal, has, under the microscope, the appearance of white

Digitized by Google

curved cylinders of a very uniform diameter. On removing the powder with ether, and piercing the side of the insect, a purplish-red fluid exudes, which contains red colouring matter, in minute granules assembled round a colourless nucleus. These groups seem to float in a colourless fluid, which appears to prove, that whatever may be the function of the colouring matter, it has a distinct and marked form, and does not pervade, as a mere tint, the fluid portion of the insect. To this colouring matter, Mr. De la Rue has given the name of CARMINIC ACID.

There are some remarkable peculiarities about the production of carmine: the shade and character of the colour are altered by slight, very slight, differences of the temperature at which it is prepared; and with every variation in the circumstance of illumination, a change is discovered in the colour. Sir H. Davy relates the following anecdote in illustration of this:—

"A manufacturer of carmine, who was aware of the superiority of the French colour, went to Lyons for the purpose of improving his process, and bargained with a celebrated manufacturer in that city for the acquisition of his secret, for which he was to pay 1,000*l.* He saw all the process, and a beautiful colour was produced, but he found not the least difference in the French method and that which had been adopted by himself. He appealed to his instructor, and insisted that he must have kept something concealed. The man assured him that he had not, and invited him to inspect the process a second time. He very minutely examined the water and the materials, which were in every respect similiar to his own, and then, very much surprised, he said: 'I have both lost my money and my labour; for the air of England does not admit of our making good carmine.'—'Stay,' said the Frenchman, 'don't deceive yourself; what kind of weather is it now?'—'A bright sunny day,' replied the Englishman. 'And such are the days,' replied the Frenchman, 'upon which I make my colour: were I to attempt to manufacture it on a dark and cloudy day, my results would be the same as yours. Let me advise you to make your carmine on sunny days.'" Experiments on this subject have proved that coloured precipitates which are brilliant and beautiful when they are precipitated in bright sunshine, are dull, and suffer in their general character, if precipitated in an obscure apartment, or in the dark.

To revive or brighten Carmine.—We may brighten ordinary carmine, and obtain a very fine and clear pigment, by dissolving it in water of ammonia. For this purpose we leave ammonia upon carmine in the heat of the sun, till its colour is extracted, and the liquor has got a fine red tinge. It must be then drawn off and precipitated, by acetic acid and alcohol, next washed with alcohol, and dried. Carmine dissolved in ammonia has been long employed by painters under the name of liquid carmine.

Carmine is the finest red colour which the painter possesses. It is principally employed in miniature painting, water colours, and to tint artificial flowers, because it is more transparent than the other colours. This valuable pigment is often adulterated with starch. Water of ammonia enables us to detect this fraud by dissolving the pure carmine, and leaving the starchy matter, as well as most other sophisticating substances. Such debased carmine is apt to spoil with damp.

Of CARMINE, 9,726 ozs. were *imported* in 1856, and only 4,267 ozs. in 1864.

CARNALLITE. A substance found mixed with rock salt, in masses, at Stassfurth in Prussia, Saxony. It may be obtained by evaporation of the mother liquor of sea-salt. It is used for manuring.

CARNAUBA. The name of a palm growing in Brazil. The *corypha cerifera.* The fruit is edible. Candles are made from the wax which is obtained from the leaves by melting the coating. The wood is very strong, and used in building.

CARNELIAN, or CORNELIAN. (*Cornaline*, Fr.; *Karneol*, Germ.; *Cornalina*, Ital.) A reddish variety of chalcedony, generally of a clear bright tint; it is sometimes of a yellow or brown colour, and it passes into common chalcedony through greyish red. Herntz, by his analysis, shows that the colour is due to oxide of iron. He found per cent., Peroxide of Iron 0·050; Alumina 0·081; Magnesia 0 028; Potash 0·0043; Soda 0·075; the remainder being Silica.—*Dana.*

Carnelians are the stones usually employed when engraved for seals. The French give to those carnelians which have the utmost transparency and purity, the name of *Cornaline d'ancienne roche.* See AGATE.

The late J. Forbes, Esq., long a resident in India, and with ample means of reference to the province of Guzerat, thus describes the locality of the carnelian mines:—

"Carnelians, agates, and the beautifully variegated stones improperly called Mocha Stones, form a valuable part of the trade at Cambay. The best agates and carnelians are found in peculiar strata, thirty feet under the surface of the earth, in a small tract among the Rajepiplee hills on the banks of the Nerbudda; they are not to be met with in any other part of Guzerat, and are generally cut and polished in Cambay. On being taken from their native bed, they are exposed to the *heat* of the sun for two years: the longer they remain in that situation, the brighter and deeper will be the colour of the stone. Fire is sometimes substituted for the solar ray, but with less

Digitized by Google

effect, as the stones frequently crack, and seldom acquire a brilliant lustre. After having undergone this process, they are boiled for two days, and sent to manufacturers at Cambay. The agates are of different hues; those generally called carnelians are dark, white, and red, in shades from the palest yellow to the deepest scarlet.

"The variegated stones with landscapes, trees, and water beautifully delineated, are found at Copper-wange, or, more properly, Cubbeer-punge, 'The Five Tombs,' a place sixty miles distant."—*Oriental Memoirs*, vol. i. p. 323, 2nd ed.

"At Neemoudra, a village of the Rajepiplee district, and three miles east, are some celebrated carnelian mines. The country in the immediate vicinity of the mines is but little cultivated; and on account of the jungles, and their inhabitants the tigers, no human inhabitants are found nearer than Rattunpoor, which is seven miles off. The miners have huts at this place when stones are burned.

"The carnelian mines are situated in the wildest parts of the jungle, and consist of numerous shafts worked down perpendicularly about 4 feet wide, the deepest about 50 feet. Some extend at the bottom in a horizontal direction, but usually not far, the nature of these pits being such as to prevent their being worked a second year, on account of the heavy rains causing the sides to fall in; so that new ones must be opened at the conclusion of every rainy season. The soil is gravelly, and consists chiefly of quartz sand, reddened with iron and a little clay. The nodules weigh from a few ounces to even two or three pounds, and lie close to each other, but for the most part distinct, not being in strata, but scattered through the masses in great abundance.

"On the spot, the carnelians are mostly of a blackish-olive colour, like common dark flints, others somewhat lighter, others still lighter with a milky tinge; but it is quite uncertain what appearance they will assume after they have been burnt.

"From Neemoudra they are carried by the merchants to Cambay, where they are cut, polished, and formed into beautiful ornaments, for which that city is so justly celebrated."—Copeland, *Bombay Researches*; Hamilton's *Description of Hindostan*, 4to. 1820.

The stones from Cambay, are offered in commerce, cut and uncut, as roundish pebbles from 1 to 3 inches in diameter. The colour of red carnelian of Cambay varies from the palest flesh-colour to the deepest blood-red; the latter being most in demand for seals and trinkets. The white are scarce, but when white and uniform they are valuable; the yellow and variegated are of little estimation in the Bombay market.

The following is the statement of the CARNELIANS *exported* by sea from the port of Bombay to foreign and Indian stations not subject to the Presidency of Bombay, from 1st May, 1856, to 30th April, 1857:—To the African Coast 20,583; Arabian Gulf 26,157; Ceylon 2,192; Hong Kong 946; Penang, Singapore, and Straits of Malacca 3,635; Persian Gulf 7,777; Suez 4,755; East Indian ports of Malabar 400.

Total value in rupees, 69,046; the rupee being valued at two shillings.

The present trade in these stones cannot be correctly ascertained, as in the Board of Trade returns they are now included with precious stones "of the inferior class, unset." Of these the value of the imports was 12,380*l.* in 1864.

CAROB TREE. *Ceratonia Siliqua.* This tree is often called St. John's Bread, from the idea that it furnished the "locusts" and "wild honey" to St. John when in the wilderness. It is an evergreen tree of large size, and is the only tree that grows in Malta. It grows abundantly in Palestine. The ripe fruit has a sweetish taste, and is eaten in times of scarcity by the country people. Large quantities of the fruit are sent annually from Palestine to Alexandria, and thence to Constantinople. The Turks pulp it with liquorice root and other fruits, to make their sherbet. The bark is sometimes, on account of its astringency, employed as a substitute for oak bark in tanning hides. M. Mennons, of Paris, has patented the application of the carob beans to the production of a species of glucose or fermentable sugar adapted to a variety of manufacturing purposes.

CARPET. (*Tapis*, Fr.; *Teppich*, Germ.) A thick woollen fabric of variegated colours, for covering the floors of the better sort of apartments. This luxurious manufacture took its origin in Persia and Turkey, whence the most beautiful patterns were wont to come into Europe; but they have been for some time surpassed by the workmanship of France, Great Britain, and Belgium. To form a just conception of the elegant and ingenious processes by which carpets are made, we should visit the royal establishment of the Gobelins at Paris.

The warp, says Mr. Roland, being the foundation of the fabric, ought to be of fine wool, equally but firmly spun, and consist of three yarns twisted into one thread. The yarns that are to form the velvety surface of the carpet, ought also to be of the best quality, but soft and downy in their texture, so that the dye may penetrate every filament. Hemp or linen yarns are likewise employed in this manufacture, as a woof, to bind the warp firmly together after each shoot of the velvety threads. Thus we see that good carpeting consists essentially of two distinct webs woven at the same time, and firmly decussated together by the woof threads. Hence the form of the

Digitized by Google

pattern is the same upon the two sides of the cloth, only the colours are reversed, so that what was green upon one side becomes red or black upon the other, and *vice versâ*. The smaller the figures the more frequent the decussation of the two planes, and the firmer and more durable the fabric.

The carpet manufacture, as now generally practised, may be distributed into two systems—that of double fabrics, and that cut in imitation of velvet. Of late years the Jacquard loom has been much used in weaving carpets, the nature of which will be found fully explained under that title.

For the sake of illustration, if we suppose the double carpets to be composed of only two colours, the principle of weaving will be easily understood: for it is only necessary to raise the warp of each web alternately for the passage of the shuttle, the upper web being entirely above when the under web is being woven, or decussated, and *vice versâ*. In the Brussels carpet the worsted yarn raised to form the pile, and make the figure, is not cut; in the Wilton the pile is cut to give it a velvety aspect and softness. In the imperial Brussels carpet the figure is raised above the ground, and its pile is cut, but the ground is uncut; and in the royal Wilton the pile is both raised higher than in the common Wilton, and it is cut, whereby it has a rich cushion-like appearance. The cloth of all these superior carpets consists of woollen and linen, or hemp; the latter being put upon a beam, and brought, of course, through heddles and a reed; but as its only purpose is to bind together the worsted fabric, it should not be visible upon the upper face of the carpet. The worsted yarn is wound upon small bobbins or pirns, with a weight affixed to each, for giving proper tension to the threads. The number varies, for one web, from 1300 to 1800, according as the carpet is to be 27 or 36 inches wide; and they are placed, in frames, behind the loom, filled with differently coloured yarn, to correspond with the figure. This worsted warp is then drawn through the harness, heddles, and reed, to be associated with the linen yarn in the compound fabric.

In Kidderminster carpeting, both warp and weft appear upon the face of the cloth, whereas, in the Brussels style, only the warp is seen, its binding weft being fine hempen or linen threads. The three-ply imperial carpet, called the Scotch, is coming very much into vogue, and is reckoned by many to be little inferior in texture, look, and wear to the Brussels. Kilmarnock has acquired merited distinction by this ingenious industry. In this fabric, as well as in the two-ply Kidderminster, the weft predominates, and displays the design; but, in the French carpets, the worsted warp of the web shows the figure. Plain Venetian carpets, as used for stairs and passages, are woven in simple looms, provided merely with the common heddles and reed. The warp should be a substance of worsted yarn, so heavy as to cover in the weft completely from the view. Figured Venetian carpets are woven in the two-ply Kidderminster looms, and are provided with a mechanism to raise the pattern upon the worsted warp. The weft is an alternate shoot of worsted and linen yarn, and must be concealed.

The following figure and description will explain the construction of the three-ply imperial Scotch and two-ply Kidderminster carpet loom, which is merely a modification of the Jacquard *métier*. The Brussels carpet loom, on the contrary, is a draw-boy loom on the damask plan, and requires the weaver to have an assistant.

428

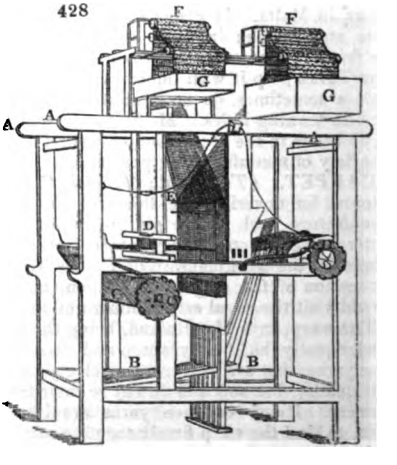

Fig. 428, A A A, is the frame of the loom, consisting of four upright posts, with caps and cross-rails to bind them together. The posts are about six feet high. C C, the cloth-beam, is a wooden cylinder, six inches or thereby in diameter, of sufficient length to traverse the loom, with iron gudgeons in the two ends, which work in bushes in the side frame. On one end of this beam is a ratchet wheel, with a tooth to keep it from turning round backwards by the tension of the web. D, the lay, with its reed, its under and upper shell, its two lateral rulers or swords, and rocking-tree above. There are grooves in the upper and under shell, into which the reed is fitted. E, the heddles, or harness, with a double neck attached to each of the tower or card mechanisms, F F, of the Jacquard loom. The hed-

Digitized by Google

dles are connected and work with the treddles B B, by means of cords, as shown in the figure. G G are wooden boxes for the cards. H, the yarn, or warp beam.

In draw-looms of every kind, there is no sinking of any portion of the warp, as in plain cloth-weaving; but the plane of the cloth is placed low, and the threads under which the shuttle has to pass are raised, while all the rest remains stationary. The harness part of this carpet-loom is moved by an assistant boy or girl, who thus allows the weft to be properly decussated, while the weaver attends to working the front mounting or heddles. *Fig.* 429, A represents the frame of a carpet draw-loom; B is a box or frame of pulleys, over which the cords of the harness pass, and are then made fast to a piece of wood, seen at E, which the weavers call a table. From the tail of the harness the simples descend, and to the end of each is attached a small handle G, called a bob. These handles being disposed in pairs, and their regularity preserved by means of a perforated board C, it is merely necessary to pull every handle in succession, the weaver, at the same time, working his treddles with his feet, as in any other loom. The treddles are four in number, the fabric being that of plain or alternate cloth, and two treddles allotted for each web. The harness part of the carpet draw-loom is furnished with *mails*, or metallic eyes, to save friction; two threads being drawn through each eye. The design or pattern of a carpet is drawn upon cross-rule paper, exactly in the same way as every other kind of fancy-loom work, and is transferred from the paper to the mounting by the rules for damask weaving. Suppose that a double web is so mounted that every alternate thread of the one may be raised, so as to form a sufficient shed-way for the shuttle, without depressing the other in the least: then suppose another web placed upon the former, at such a distance that it will exactly touch the convexity of those threads of the former which are raised. Then, if the threads of the latter web are sunk while the others are raised, the two would be entirely incorporated; but if this be only partially done, that is, at particular places, only those parts immediately operated upon will be affected by the action of the apparatus. If the carpet is a two-coloured pattern, as black and red, and if upon the upper surface, as extended in the loom, red flowers are to be represented upon a black ground, then all those species of design paper which are coloured may be supposed to represent the red, and those which are vacant the black. Then counting the spaces upon the paper, omit those which are vacant, and cord those which are coloured, and the effect will be produced. But as the two webs are to be raised alternately, whatever is corded for the first handle must be passed by for the second, and *vice versâ*, so that the one will form the flower, and the other the ground.

429

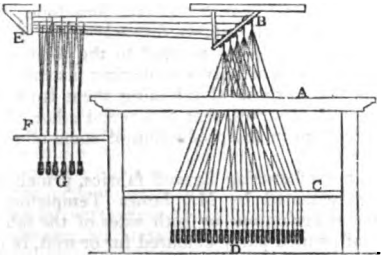

The board by which the simples are regulated appears at F. D shows the weights.

Mr. Simcox, of Kidderminster, has patented an invention for an improved manufacture of carpets, in which, by dispensing with the Jacquard loom, as well as the iron wires and tags usually employed to produce terry fabrics, such as Brussels carpets and coach-lace, he can work his machinery at greater speed and more economically. His second improvement relates to the manufacture of fabrics with cut pile, such as Wilton or Axminster carpets. He makes a ribbed fabric, greatly resembling the Brussels carpet, by a combination of woollen and linen warp and weft, arranged in such a manner that the woollen warp in the form of a ribbed surface may constitute the face of the fabric, while the linen warp forms the ground or back of the fabric. The plan he prefers, as most resembling the Brussels, consists in weaving the fabric as nearly as possible in the ordinary way, except that, instead of inserting a tag or wire to form the rib or terry, the patentee throws in a thick shoot or weft of woollen or cotton, over which the woollen warp is drawn, and forms a rib; the woollen warp being afterwards bound down with a linen shoot or weft in the ordinary way. The woollen warp employed being all of one colour, the fabric produced will be plain or unornamented, with a looped or terry pile; and upon this fabric any design may be printed from blocks.

The looms differ from the former chiefly in the employment of two separate shuttles, one for the woollen and one for the linen weft. These shuttles are both thrown by the same pickers and the same picking-sticks, and consequently the shuttle boxes must be moved up and down as may be required, in order to allow the picker to throw the proper shuttle. It will also be necessary to work the healds in a suitable manner to

Digitized by Google

form the proper shreds, in order that the woollen face may be properly bound to the linen ground.

The second part of his invention relates to the production of fabrics with a cut pile, like the Axminster or Wilton rugs or carpets. The ordinary mode of making some of these fabrics is to weave the pattern in by means of a Jacquard apparatus, and pass the woollen warp over a rod or tag, which is afterwards cut by passing a suitable knife along it, thereby producing the cut pile. The patentee produces the design and surface of the fabric from the weft in place of the warp as heretofore. For this purpose the weft is made to consist of thick woollen shoots, which must be printed or stained with suitable colours, precisely as the woollen warps have been heretofore done; and the woollen shoot, when thrown in, is, by means of suitably formed hooks, pulled up and turned into loops, which, when they are properly secured to the foundation or ground of the fabric, are afterwards cut by means of knives or cutting instruments, with which the hooks are furnished, for the purpose of releasing them from the loops and producing the cut pile. The patentee observes, that cotton and other cheap materials may be employed with great advantage in the production of some of these fabrics.

Another invention of improvements in manufacturing figured fabrics, principally designed for the production of carpeting, patented by Mr. James Templeton, of Glasgow, consists in producing the pattern either on one or both sides of the fabric, by means of printed weft; also in the use of printed party-coloured fur or weft, in the manufacture of Axminster carpets and other similar fabrics. This invention is also applicable to the production of figured chenille weft for the manufacture of chenille shawls. —Under the new arrangements of the Patent Office the specifications of these patents are cheaply obtained.

CARPETS, PRINTED. Mr. Wood has taken a patent for weaving and printing carpets, using an ordinary Brussels carpet loom. After putting in the wire, or otherwise forming the loop, he throws in the usual linen shoot, on the face, to bind it; and then, for the back shoot, he throws in a thick soft weft. Or, to make a better edge and more elastic back, he employs the ordinary two linen shoots, —one on the face and the other in the back, —and then (or before throwing in the second linen shoot) he draws down only one-half of the lower portion of the linen warp (being one-quarter of the whole), and throws in the thick shoot which is driven up by the batten or lay, so as to cover the second linen shoot, which is then inside the fabric: from the thick shoot being bound only by each alternate yarn of the warp, it will be more elastic than if bound more closely by using every yarn; while the second linen shoot, having half the warp over it, holds down the face or first shoot; and any inequality in the taking up of the linen warp by one portion of it binding in a greater substance than the other, is remedied by drawing down the different portions in succession.

In printing Brussels and other pile carpets, the patentee first provides a table, long enough to receive the entire length or piece of the carpet to be printed: at each end of the table there is a frame of the same height or level, sufficiently long to receive the cylinder printing machine when off the fabric; and on the surface of the table the printing blanket is laid between two rails or guides, which are fixed at exactly the same distance apart as the carpet is wide, so as to keep it in one position, and to form the guides for the printing cylinders. The carpet is fastened to one end of the table, and is then laid on the top of the same, and drawn tight at the other end by a roller, which is furnished with a ratchet wheel and click. The printing cylinders are mounted in a movable frame, containing a corresponding number of colour cans and feeding rollers, to supply them with colour. This printing apparatus is passed over the table, and between the guide rails (the patters on the cylinder being coloured, and bearing upon the carpet), to the frame at the other end of the table, and then back again; and this process is repeated until the fabric is sufficiently coloured. In order to insure each part of the pattern or printing surface coming again and again on the same place, toothed wheels are affixed on the axis of the printing cylinders, which gear into racks fixed on the sides of the table; so that, however frequently the printing apparatus passes over the fabric, every part of the pattern will fall on the same place. Instead of the printing apparatus being passed back again over the same table, it may, by the application of movable frames at the end of the table, be moved sideways on to another table, and so successively. See RUGS.

CARPHOLITE. A silicate of manganese, alumina, and iron, found in some parts of Bohemia.

CARPMEALS. The name of a coarse cloth which used to be manufactured in the North of England.

CARRAGEEN. (*Chondrus crispus*). Irish moss. See ALGÆ.

CARRAGEENIN. The mucilaginous constituent of carrageen moss. It is

Digitized by Google

called by some writers *vegetable jelly* or *vegetable mucilage*, by others *pectin*. "It appears to me (*Pereira*) to be a peculiar modification of mucilage."

CARPHOSIDERITE. A hydrated phosphate of iron containing a little manganese and lime.—*Dana.*

CARROLITE. A sulphide of cobalt and copper. Brush regards the mineral as cobaltic pyrites in which a portion of the cobalt is replaced by copper.

CARTHAMUS, or SAFFLOWER (*Carthamus tinctorius*; *Carthame*, Fr.; *Färber distel*, Germ.), the flower of which alone is used in dyeing, is an annual plant cultivated in Spain, Egypt, and the Levant. There are two varieties of it—one which has large leaves, and the other smaller ones. It is the last which is cultivated in Egypt, where it forms a considerable article of commerce.

Carthamus contains two colouring matters, one yellow and the other red. The first alone is soluble in water: its solution is always turbid; with reagents it exhibits the characters usually remarked in yellow colouring matters. The acids render it lighter, the alkalies deepen it, giving it more of an orange hue; both produce a small dun precipitate, in consequence of which it becomes clearer. Alum forms a precipitate of a deep yellow, in small quantity. The solution of tin and other metallic solutions cause precipitates which have nothing remarkable in them.

The yellow matter of carthamus is not employed; but in order to extract this portion, the carthamus is put into a bag, which is trodden under water, till no more colour can be pressed out. The flowers, which were yellow, become reddish, and lose in this operation nearly one-half of their weight. In this state they are used.

For extracting the red part of carthamus, and afterwards applying it to stuff, the property which alkalies possess of dissolving it is had recourse to, and it is precipitated by an acid.

The process of dyeing consists, therefore, in extracting the colouring matter by means of an alkali, and precipitating it on the stuff by means of an acid.

This solution of carthamus is prepared with crystallised carbonate of soda, and it is precipitated by lemon juice. It has been remarked that lemons beginning to spoil are fitter for this operation than those which are less ripe, whose juice retains much mucilage. After squeezing out the lemon juice, it is left to settle for some days. The precipitate of carthamus is dried at a gentle heat upon plates of stone-ware; from which it is detached and very carefully ground with talc which has been reduced to a very subtile powder by means of the leaves of shave-grass (*presle*), and successively passed through sieves of increasing fineness. It is the fineness of the talc, and the greater or less proportion which it bears to the carthamus precipitate, which constitute the difference between the high- and low-priced safflower rouges.

Carthamus is used for dyeing silk, poppy, *nacarat* (a bright orange-red), cherry, rose colour, and flesh colour. The process differs according to the intensity of the colour, and the greater or less tendency to flame-colour that is wanted. But the carthamus bath, whose application should be varied, is prepared as follows:—

The carthamus, from which the yellow matter has been extracted, and whose lumps have been broken down, is put into a trough. It is repeatedly sprinkled with crude pearl ashes or soda, well powdered and sifted, at the rate of 6 lbs. for 120 lbs. of carthamus; but soda is preferred, mixing carefully as the alkali is introduced. This operation is called *amestrer*. The *amestred* carthamus is put into a small trough with a grated bottom, first lining this trough with a closely woven cloth. When it is about half filled, it is placed over a large trough, and cold water is poured into the upper one till the lower becomes full. The carthamus is then set over another trough till the water comes from it almost colourless. A little more alkali is now mixed with it, and fresh water is passed through it. These operations are repeated till the carthamus be exhausted, when it turns yellow.

After distributing the silk in hanks upon the rods, lemon juice, brought in casks from Provence, is poured into the bath till it becomes of a fine cherry colour; this is called turning the bath. It is well stirred, and the silk is immersed and turned round the skein-sticks in the bath, as long as it is perceived to take up the colour. For *ponceau* (poppy colour), it is withdrawn, the liquor is run out of it upon the peg, and it is turned through a new bath, where it is treated as in the first. After this it is dried and passed through fresh baths, continuing to wash and dry it between each operation, till it has acquired the depth of colour that is desired. When it has reached the proper point, a brightening is given it by turning it round the sticks seven or eight times in a bath of hot water, to which about half a pint of lemon juice for each pailful of water has been added.

When silk is to be dyed *ponceau*, or poppy colour, it must be previously boiled as for white; it must then receive a slight foundation of arnatto, as explained in treating of that substance. The silk should not be alumed.

Digitized by Google

The *nacarats*, and the deep cherry colours, are given precisely like the *ponceaux*, only they receive no arnatto ground; and baths may be employed which have served for the *ponceau*, so as to complete their exhaustion. Fresh baths are not made for the latter colours, unless there be no occasion for the poppy.

With regard to the lighter cherry-reds, rose colour of all shades and flesh colours, they are made with the second and last runnings of the carthamus, which are weaker. The deepest shades are passed through first.

The lightest of all these shades, which is an extremely delicate flesh colour, requires a little soap to be put into the bath. This soap lightens the colour, and prevents it from taking too speedily, and becoming uneven. The silk is then washed, and a little brightening is given it in a bath which has served for the deeper colours.

All these baths are employed the moment they are made, or as speedily as possible, because they lose much of their colour upon keeping, by which they are even entirely destroyed at the end of a certain time. They are, moreover, used cold, to prevent the colour from being injured. It must have been remarked, in the experiments just described, that the caustic alkalies attack the extremely delicate colour of carthamus, making it pass to yellow. This is the reason why crystals of soda are preferred to the other alkaline matters.

In order to diminish the expense of the carthamus, it is the practice in preparing the deeper shades to mingle with the first and the second bath about one-fifth of the bath of archil.

Dobereiner regards the red colouring matter of carthamus as an acid, and the yellow as a base. His carthamic acid forms, with the alkalies, colourless salts, decomposed by the tartaric and acetic acids, which precipitate the acid of a bright rose-red. Heat has a remarkable influence upon carthamus, rendering its red colour yellow and dull. Hence, the colder the water is by which it is extracted, the finer is the colour. Light destroys the colour very rapidly, and hitherto no means have been found of counteracting this effect. For this reason this brilliant colour must be dried in the shade, its dye must be given in a shady place, and the silk stuffs dyed with it must be preserved as much as possible from the light. Age is nearly as injurious as light, especially upon the dye in a damp state. The colour is very dear; a thousand parts of carthamus contain only five parts of *carthamine*.

In preparing the finest rouge, the yellow colouring matter being separated by washing with water, the red is then dissolved by the aid of alkali, and is thrown down on linen or cotton rags, by saturating the solution with vegetable acid. The colour is rinsed out of these rags, dissolved anew in alkalies, and once more precipitated by lemon juice. The best and freshest carthamus must be selected. It is put into linen bags, which are placed in a stream of water, and kneaded till the water runs off colourless. The bags are then put into water soured with a little vinegar, kneaded till the colour is all expelled, and finally rinsed in running water.

There is a considerable consumption of safflower in the manufacture of rouge, for which there is a far greater demand than is generally supposed, being employed not only as a "Toilet appendage" of the *monde*, but for theatrical use.

Rouge consists of carthamine and very fine burnt talc made into a paste with water. It is made of five regular shades, known as Nos. 6, 8, 12, 18, 24, varying in depth of colour as the numbers increase; Nos. 6 and 8 are used by fair beauties, No. 12 is medium, while Nos. 18 and 24 are for dark complexions.

Pink saucers, formerly in great request for dyeing silk stockings at home, and even now not wholly unknown to trade, consist of a shallow porcelain saucer into which a film of carthamine has been allowed to precipitate and then dried. The Chinese make a "Book Rouge" in a somewhat similar way; a very strong solution of the carthamine is brushed over a cardboard, which when dry "is fit for ladies' use." The card is, however, no longer pink or red, but of a beautiful metallic green colour due to some special optical reason not yet explained; the pink saucers made in England exhibit in a very slight degree the same effect, of which the surface of indigo also in some measure resembles.

Salvétat has found it advantageous to mix the red of safflower with the pigments used in porcelain painting for purple, carmine, and voilet, colours which, in consequence of the difference of their shade before and after firing, are very liable to mislead. To avoid this, he imparts to the pigment (consisting of flux, gold, purple, and chloride of silver) by means of the red of carthamus suspended in water, the same shade which he desires to obtain after firing.

The colouring matter of safflower has been examined by Salvétat, who has found much difference in carthamus of reputed good quality. The following table gives some of his results:—

Digitized by Google

	1.	2.	3.	4.
Water - - - - - - -	6·0	11·5	4·5	4·8
Albumen - - - - - - -	3·8	4·0	8·0	1·7
Yellow colouring matter *a* - - -	27·0	30·0	30 0	26·1
„ „ „ *b* - - -	3·0	4·0	6·0	2·1
Extractive matter - - - -	5·0	4·0	6·0	4 1
Waxy matter - - - - -	1·0	0·8	1·2	1·5
Carthamine - - - - -	0·5	0·4	0·4	0·6
Woody fibre - - - - -	50·4	41·77	38·4	56·0
Silica- - - - - - -	2·0	1·5	3·5	1·0
Sesquioxide of Iron and Alumina -	0·6	0·1	1·6	0·5
„ „ Manganese - - -	0·1	0·1	0 3	

CARTON PIERRE. A composition of paper mixed with whiting or glue for imitating stone or bronze. See PAPIER MACHE.

CARUTO. The fruit of the *Genipa Americana*, a native plant of British Guiana, yields the dye to which this name is given. It is of a beautiful bluish-black colour.

CARVING BY MACHINERY is an art of comparatively modern date, nearly, if not the whole of the originators and improvers of it, being men of the present day. It is true that the Medallion Lathe and many other appliances for ornamental turning and drilling can claim a much earlier origin, but these can scarcely be called carving machines, and are altogether incapable of aiding the economy of producing architectural decorations of any kind. We are not aware of any practical scheme for accomplishing this object prior to the patent of Mr. Joseph Gibbs, in 1829, which we believe was used by Mr. Nash in ornamenting some of the floors of Buckingham Palace, and on many other works of inlaying and tracery. The cutting of ornamental forms in low relief seems to have been the principal object of the inventor; and this he accomplished satisfactorily by a series of ingenious mechanical arrangements, which greatly reduced the cost, while securing unusual accuracy in this kind of work. Some modifications of machinery for copying busts, bosses, and other works in bold relief are also described in Mr. Gibbs's patents, but these were never carried into successful practice. The tracery and inlaying machine is illustrated by *fig.* 430, which is a plan of the machine. A is a shaft capable of vertical

430

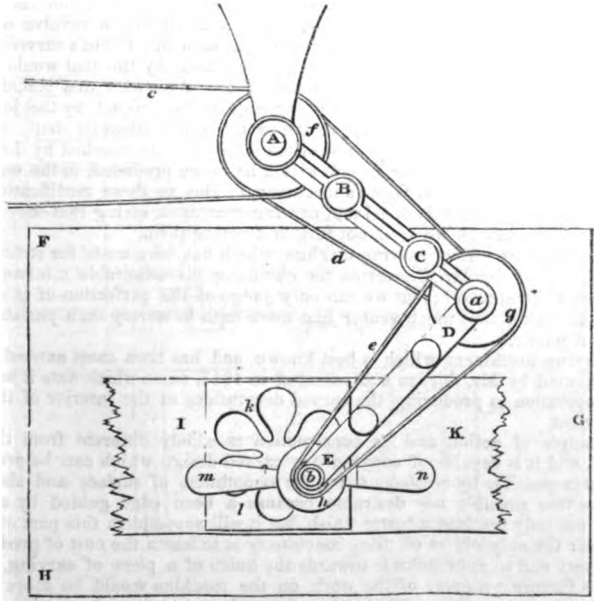

motion in its bearings, which are in the fixed framing of the machine; B, C, and D, E, are swing frames jointed together by a short vertical shaft *a*, and securely keyed to the shaft A. The point *b* is the axis of a revolving tool, which is driven by the belts *c*, *d*, *e*, and the compound pulleys *f*, *g*, *h*, which increase the speed at each step; F, G, H, is the table on which the work is fixed; I, K the work; and *k*, *l*, a templet of brass pierced with the horizontal form of the pattern to be produced in the wood; this templet is securely fixed on the top of the work, or over it, and the machine is adjusted for action.

There is a treadle, not shown in the figure, which enables the workman to lift or depress the shaft A, and the swing frames and tool attached to it; he can thus command the vertical position of the tool with his foot, and its horizontal position with his hand by the handles *m*, *n*, which turn freely on a collar of the swing frame surrounding the mandril or tool holder. The tool having been brought over one of the apertures of the templet when in rapid action, is allowed to sink to a proper depth in the wood underneath, and the smooth part of its shaft is then kept in contact with the guiding edges of the templet and passed round and over the entire surface of the figure, until a recess of the exact size and form of that opening in the templet is produced; this process is repeated for every other opening, and thus a series of recesses are formed in the oak flooring planks which correspond with the design of the templets used. To complete the work it is requisite to cut out of some darker or differently coloured material a number of thin pieces which will fit these recesses, and these are produced in the same way from templets which will fit the various apertures of that first used; these pieces are next glued into the recesses, and the surface when planed and polished exhibits the pattern in the various colours used. For inlaying it is important that the cutting edge of the tool should travel in the same radius as the cylindrical shaft, which is kept against the edge of the templet; but if the tool is a moulded one, a counterpart of its mouldings will be produced in the work, while the pattern, in planes parallel to that of the panel, will have the form of the apertures in the templet used. In this way, by great care in the preparation of the templets and the tools, much of the gothic tracery used in church architecture may be produced, but the process is more applicable to Bath stone than to wood when moulded tools are requisite.

Mr. Irving's patents for cutting ornamental forms in wood and stone are identical in principles of action and in all important points of construction with the arrangements previously described. In that of 1843 he particularly claims all combinations for accomplishing the purpose, "provided the swing frame which carries the cutter, and also the table on which the article to be wrought is placed, have both the means of circular motion." The pierced templet is the guiding power, and the work and templet are fixed on a circular iron table, which is at liberty to revolve on its axis. The swing frame which carries the cutter is single, as in Mr. Gibbs's curved moulding machine, and its radius so adjusted, that an arc drawn by the tool would pass over the centre of the circular table. The mode of operating with this machine was to keep the shaft of the tool against the guiding edge of the templet, by the joint movements of the table on its centre, and of the swing frame about its shaft; and it will be obvious that by this means any point of the table could be reached by the tool, and therefore any pattern of moulded work within its range produced, in the way already described in speaking of Mr. Gibbs's machinery. But as these modifications of the original idea are not, strictly speaking, carving machines, seeing that they only produced curved mouldings, we need not further describe them.

Perhaps the most perfect carving machine which has been made for strictly artistic works is that used by Mr. Cheverton for obtaining his admirable miniature reductions of life-sized statuary; but we can only judge of the perfection of this machine by its work, seeing that the inventor has more faith in *secrecy* than *patents*, and has not made it public.

The carving machinery which is best known, and has been most extensively used, is that invented by Mr. Jordan and patented in 1845, since which date it has been in constant operation in producing the carved decorations of the interior of the Houses of Parliament.

Its principle of action and its construction is widely different from that above described, and it is capable of copying any carved design which can be produced, so far as *that* is possible by *revolving tools*; the smoothness of surface and sharpness of finish is neither possible nor desirable, because a keen edge guided by a practised hand will not only produce a better finish, but it will accomplish this part of the work at less cost; the only object of using machinery is to lessen the cost of production, or to save time; and in approaching towards the finish of a piece of carving, there is a time when further progress of the work on the machine would be more expensive than to finish it by hand. This arises from the necessity of using smaller tools

Digitized by Google

towards the finish of the work to penetrate into its sharp recesses, and the necessarily slow rate at which these cut away the material; it is consequently a matter of commercial calculation, how far it is desirable to finish on the machine, and when to deliver it into the hands of the artist, so as to secure the greatest economy. This depends in a great measure on the hardness of the material; rosewood, ebony, box, ivory, and statuary marble, should be wrought very nearly to a finish; but lime, deal, and other soft woods should only be roughly pointed.

Fig. 431 is a plan of the machine, *fig.* 432 a front elevation, and *fig.* 433 a side elevation. The same letters indicate the same part in all the figures. The carving machine consists of two distinct parts, each having its own peculiar motions quite independent of the other, but each capable of acting simultaneously and in unison with the other. The first, or horizontal part, is the bed plate "floating-table," &c., on which the pattern and work are fixed; all the motions of this part are horizontal. The second, or vertical part, is that which carries the cutters and tracer, the only motion of which, except the revolution of the tools, is vertical.

The horizontal part consists of three castings: The bed plate A, B, C, D, which is a railway supported on piers from the floor and fixed strictly level. The carrying frame, I, J, K, L, mounted on wheels and travelling on the bed plate (the long sides of this frame are planed into (V) rails), and the "floating-table," M, N, O, P, which is also mounted on wheels to travel on the rails of the carrying frame. It is called the "floating-table" because it can be moved in any horizontal direction with almost as much facility as if it were a floating body. Primarily this table has two straight lined motions at right angles to each other, but by combination of these it may move over any figure in an horizontal plane; and because this is accomplished without angular motion about a centre, every point in the surface of the table moves through the same figure at the same time; hence the power of producing many copies of a pattern simultaneously.

431

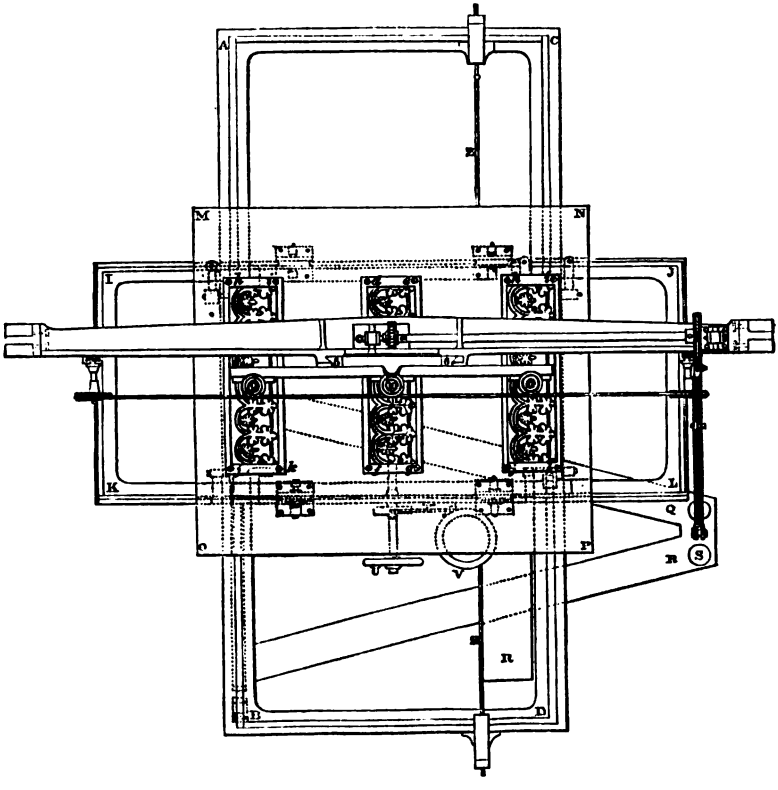

Digitized by Google

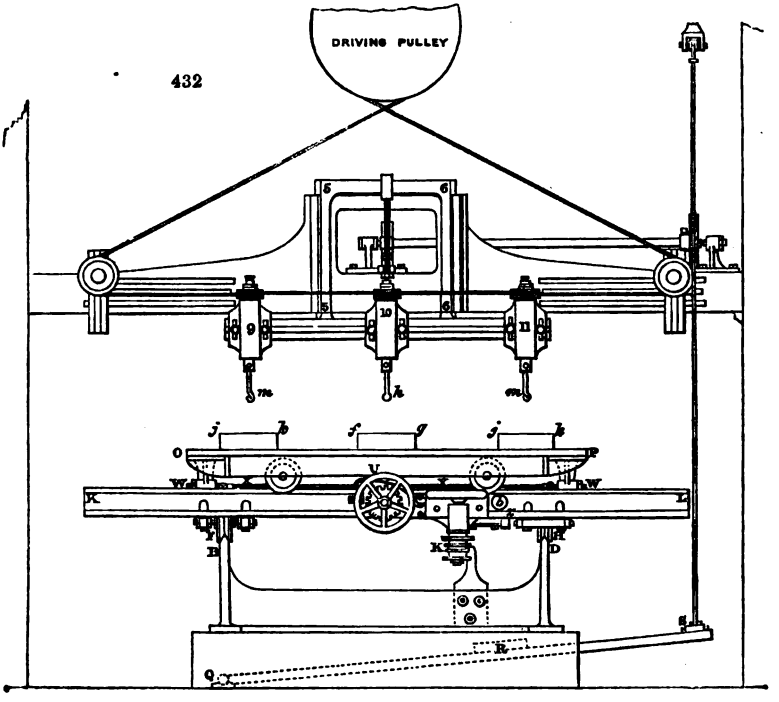

432

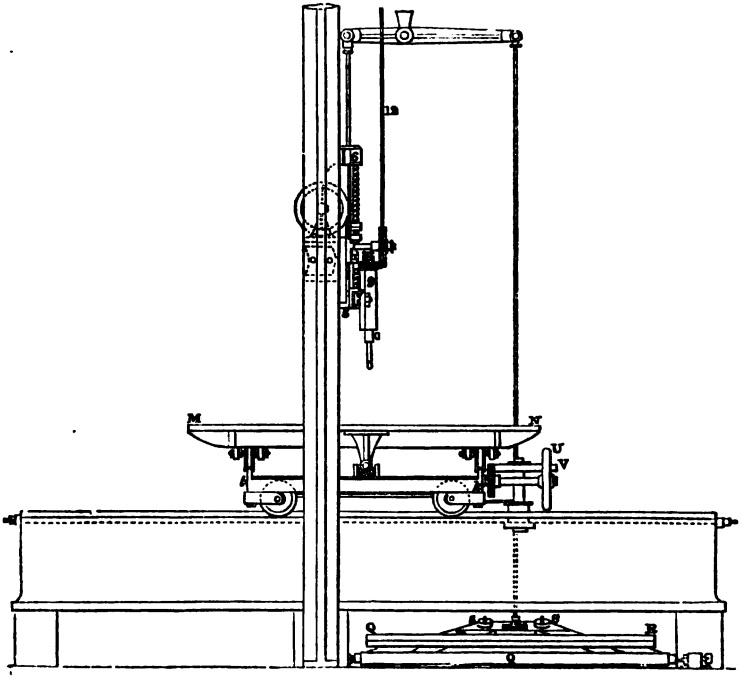

433

Digitized by Google

The second, or vertical part of the machine, is a cast-iron bridge supported on columns across the centre of the bed plate; on the centre of this bridge piece is a wide vertical slide, 5, 6, with a (T) slotted bar on its lower edge; to this bar the mandril heads or tool holders, 9, 10, 11, are bolted, at such distances apart as suits the width of the work in hand, and in such numbers as it is convenient to work at one time. If the framing of the machine is massive and well fixed, six or eight narrow pieces may be carved at once; but if the width of the work is equal to half that of the table, only one can be done, as in that case half the table is required for the pattern. The motion of the vertical slide is governed by the workman's foot on the treadle, R, Q, S; at S balance weights are placed, so as to adjust the force with which the tools will descend on the work; any pressure on the foot-board R lifts the slide, and with it the tools and tracing point.

Returning to the horizontal part of the machine, *d*, *e*, *f*, *g*, is the pattern or original carving which is to be copied, and *h*, *i*, *j*, *k*, two copies in progress. The movements of the floating table are managed by the workman with the hand-wheels U, V; the left hand, on U, directs the lateral motion on the frame, and the right, on V, directs the longitudinal motion on the bed plate; the left-hand movement is communicated by the cord X, X, which is fixed to brackets W, W, underneath the table, and makes one turn round a small pulley on the axis of the wheel U. The right-hand movement is communicated by the cord Z, which is fastened to each end of the bed plate, and makes one or two turns round the pulley K. When at work the man stands inside the frame of the bed plate, with his right foot on the board R and his hands on the steering wheels; on releasing the pressure of the foot the vertical slide descends by its unbalanced weight until the tracer *h* comes in contact with the pattern; the cutters *m*, *m*, are made to revolve by steam power at the rate of seven thousand times per minute, and are so shaped as to cut like a revolving gouge, so that they instantly cut away all the superfluous material they come in contact with; and, by the time the tracer has been brought over every part of the pattern, the pieces *h*, *i*, *j*, *k* will have become exact copies of it.

So far as panel carving is concerned the whole machine has been described; but it is requisite to elaborate its construction a little more for the purpose of carving on the round, and copying subjects which require the blocks to be cut into in all possible directions. Various modifications have been used, but we shall only explain that which we think best adapted to ornamental carving. It is not requisite that we should go into the various applications of this machine, to the manufacture of printing blocks, ship's blocks, gunstocks, letter cutting, tool handling, cabinet shaping, &c. &c., all of which have been shown from time to time to be within its power; nor is it requisite to describe more recent inventions founded on it, as they will more properly come under other heads.

When the machine is intended to copy any form which can be carved by hand, the floating table is differently constructed, but all other parts remain as before. In the floating table used for this purpose, there is an opening in the centre of the table, and a turning plate, which is mounted a few inches above the level of the table, to turn in bearings in standards. Underneath the turning plate, and forming a part of it, there is an arc of rather more than half a circle, having its centre in the axis on which the plate turns, and this arc is cogged on its edge to fit the threads of the tangent screw on the axis of the wheel, so that by turning this wheel, and dropping its detent into any cog, the workman can fix the plate at any angle with the horizon. There are three chucks fitted into sockets of the turn plate, and these are similarly divided on their edges by holes or cogs, into which detents fall, so as to secure them steadily in any required position.

In going through the process the workman will, of course, attack the work when it is placed in a favourable position for the tools to reach a large portion of its surface: and having completed as much as possible on that face, he will turn all the chucks through the same number of divisions; the pattern and work will still have the same relative position to each other as before, but an entirely new face of both will be presented to the tools; this will be carved in like manner, and then another similar change made, and so on until all has been completed which can be reached without changing the angular position of the turning plate. This can be done by the wheel, and when a sufficient number of these changes have been gone through, the work will be complete on every face, although the block may have required to be pierced through in fifty different directions.—T. B. J.

CASCALHO. After the first washing of sand for gold there is a deposit left, and this, in Brazil, is called Cascalho. Also the alluvial soil in which Brazil diamonds are found.

CASCARILLA BARK. (Spanish, *Cascara*, bark.) The bark of *Croton eleutheria* and *Croton cascarilla*, both of which shrubs grow in the West Indies. The bark pos-

Digitized by Google

sessing tonic properties is used medicinally. Of this bark we *imported* in 1864 10,305 cwts., and *exported* 3,688 cwts.

CASE-HARDENING is the name of the process by which iron tools, keys, &c., have their surfaces converted into steel.

Steel when very hard is brittle, and iron alone is for many purposes, as for fine keys, far too soft. It is therefore an important desideratum to combine the hardness of a steely surface with the toughness of an iron body. These requisites are united by the process of case-hardening, which does not differ from the making of steel, except in the shorter duration of the process. The property of hardening is not possessed by pure malleable iron; but by a partial process of cementation the iron is converted exteriorally into steel, and is subsequently hardened to that particular depth. Tools, utensils, or ornaments, intended to be polished, are first manufactured in iron, and nearly finished, after which they are put into an iron box, together with vegetable or animal charcoal in powder, and cemented for a certain time This treatment converts the external part into a coating of steel, which is usually very thin because the time allowed for the cementation is much shorter than when the whole mass is to be converted into steel. Immersion of the heated pieces in water hardens the surface, which is afterwards polished by the usual methods.

When the case-hardening is required to terminate at any particular part, as a shoulder, the object is left with a band or projection; the work is allowed to cool without being immersed in water; the band is turned off, and the work, when hardened in the open fire, is only effected as far as the original cemented surface remains. This ingenious method was introduced by Mr. Roberts, of Manchester, who considers the success of the case-hardening process to depend on the gentle application of the heat; and that, by proper management not to overheat the work, it may be made to penetrate three-eighths of an inch in four or five hours.—*Holtzapffel.*

The recent application of prussiate (ferrocyanate) of potash to this purpose is a very interesting chemical problem. The piece of iron, after being polished, is to be made brightly red-hot, and then rubbed or sprinkled over with the above salt in fine powder, upon the part intended to be hardened. The prussiate being decomposed, and apparently dissipated, the iron is to be quenched in cold water. If the process has been well managed, the surface of the metal will have become so hard as to resist the file. It has been proposed to smear over the surface of the iron with loam made into a thin paste with a strong solution of the prussiate, to dry it slowly, then expose the whole to a nearly white heat, and finally plunge the whole into cold water, when the heat has fallen to dull redness. See STEEL.

CASEIN (from *Caseus*, the Latin name for cheese). The principal part of the nitrogenised matters contained in the milk of mammiferous animals is *casein*. It forms the greatest part of cheese. It is coagulated by acids, but not by heat—in this it differs from either fibrine or albumen; it is also coagulated by rennet (see RENNET) as in the *curding* of milk. See Watts' "Dictionary of Chemistry."

CASHEW NUT. The fruit of the *Anacardium occidentale* of the West Indies.

CASHMERE, or CACHEMERE, a peculiar textile fabric first imported from the kingdom of Cashmere, and now well imitated in France and Great Britain. The material of the Cashmere shawls is the downy wool found about the roots of the hair of the Thibet goat. The year 1819 is remarkable in the history of French husbandry for the acquisition of this breed of goats, imported from the East under the auspices of their government, by the indefatigable courage and zeal of M. Jaubert, who encountered every fatigue and danger to enrich his country with these valuable animals, aided by the patriotism of M. Ternaux, who first planned this importation, and furnished funds for executing it, at his own expense and responsibility. He placed a portion of the flock brought by M. Jaubert, at his villa of St. Ouen, near Paris, where the climate seemed to be very favourable to them, since for several successive years after their introduction M. Ternaux was enabled to sell a great number of both male and female goats. The quantity of fine fleece or down afforded by each animal annually is from a pound and a half to two pounds.

The wool imported into Europe comes by the way of Casan, the capital of a government of the Russian empire upon the eastern bank of the Wolga; it has naturally a greyish colour, but is easily bleached. Its price at Paris is about 6*s.* the pound avoirdupois. The waste in picking, carding, and spinning, amounts to about one-third of its weight.

The mills for spinning Cashmere wool have multiplied very much of late years in France, and the prices of the yarn have fallen by from 25 to 30 per cent., notwithstanding their improved fineness and quality.

The oriental Cashmere shawls are woven by processes extremely slow and consequently costly, whence their prices are very high. They are still sold in Paris at from 4000 to 10,000 francs a piece; and from 100 to 400 pounds sterling in London. It

Digitized by Google

became necessary, therefore, either to rest satisfied with work which should have merely a surface appearance, or contrive economical methods of weaving, to produce the real Cashmere style with much less labour. By the aid of the draw-loom, and still better of the Jacquard loom, M. Ternaux first succeeded in weaving Cachemere shawls perfectly similar to the oriental in external aspect, which became fashionable under the name of French Cachemere. But to construct shawls altogether identical on both sides with the eastern was a more difficult task, which was accomplished only at a later period by M. Bauson, of Paris.

In both modes of manufacture, the piece is mounted by "*reading-in*" the warp for the different leaves of the heddles, as is commonly practised for warps in the Jacquard looms. The weaving of imitation shawls is executed, as usual, by as many shuttles as there are colours in the design, and which are thrown across the warp in the order established by the "*reader*." The greater number of these weft yarns being introduced only at intervals into the web, when the composition of the shawls requires it, they remain floating loose at the back of the piece and are cut afterwards, without affecting in the least the quality of the texture; but there is a considerable waste of stuff in the weaving, which is worked up into carpets.

The weaving of the imitation of real Cachemere shawls is different from the above The yarns intended to form the weft are not only equal in number to that of the colour. of the pattern to be imitated, but, besides this, as many little shuttles or pirns (like those used by embroiderers) are filled with these yarns as there are to be colours repeated in the breadth of the piece; which renders their number considerable when the pattern is somewhat complicated and loaded with colours. Each of these small bobbins or shuttles passes through only that portion of the flower in which the colour of its yarn is to appear, and stops at the one side and the other of the cloth exactly at its limit; it then returns upon itself after having crossed the thread of the adjoining shuttle. From this reciprocal intertexture of all the yarns of the shuttles, it results that although the weft is composed of a great many different threads, they no less constitute a continuous line in the whole breadth of the web, upon which the lay or batten acts in the ordinary way. We see therefore that the whole art of manufacturing this Cachemere cloth consists in avoiding the confusion of the shuttles, and in not striking up the lay till all have fulfilled their function. The labour does not exceed the strength of a woman, even though she has to direct the loom and work the treddles. Seated on her bench at the end opposite to the middle of the beam, she has for aids in weaving shawls from 45 to 52 inches wide, two girl apprentices, whom she directs and instructs in their tasks. About four hundred days of work are required for a Cachemere shawl of that breadth.

In the oriental process all the figures in relief are made simply with a slender pirn without the shuttle used in European weaving. By the Indians the flower and its ground are made with the pirn, by means of an intertwisting, which renders them in some measure independent of the warp. In the Lyons imitation of this style, the leaves of the heddles lift the yarns of the warp, the needles embroider as in lappet weaving, and the flower is united to the warp by the weft thrown across the piece. Thus a great deal of labour is saved, the eye is pleased with an illusion of the loom, and the shawls cost little more than those made by the common fly shuttle.

Considered in reference to their materials, the French shawls present three distinct classes, which characterise the three fabrics of Paris, Lyons, and Nimes.

Paris manufactures the French Cachemere, properly so called, of which both the warp and the weft are the yarn of pure Cachemere down. This web represents with fidelity the figures and the shades of colour of the Indian shawl, which it copies; the deception would be complete if the reverse of the piece did not show the cut ends. The Hindoo shawl, as woven at Paris, has its warp in spun silk, which reduces its price without impairing its beauty much.

Lyons, however, has made the greatest progress in the manufacture of shawls. It excels particularly in the texture of its Thibet shawls, the weft of which is yarn spun with a mixture of wool and spun silk.

Nîmes is remarkable for the low price of its shawls, in which spun silk, Thibet down, and cotton, are all worked up together.

It appears that M. J. Girard at Sèvres, near Paris, has succeeded best in producing Cachemere shawls equal in stuff and style of work to the oriental, and at a lower price. They have this advantage over the Indian shawls, that they are woven without seams, in a single piece, and exhibit all the variety and the raised effect of the eastern colours. Women and children alone are employed in his factory.

CASK. (*Tonneau*, Fr.; *Fass*, Germ.) Much ingenuity has been displayed in cutting the curvilinear and bevelled edges of the staves of casks by circular saws. Sir John Robinson proposed many years back that the stave should be bent to its true curve against a curved bed, and that while thus restrained, its edges should be cut by two saws

Digitized by Google

s s, placed in radii to the circle, the true direction of the joint as shown by the dotted circle *fig.* 434, representing the head of the cask. Mr. Samuel Brown obtained a patent. in Nov. 1825, for certain improvements in the machinery for making casks. His mechanism consists in the first place of a circular saw attached to a bench, with a sliding rest, upon which rest, each piece of wood intended to form a stave of a cask is fixed; and the rest being then slidden forward in a curved direction, by the assistance of an adjustable guide, brings the piece of wood against the edge of the rotatory saw, and causes it to be cut into the curved shape required for the edge of the stave. The second feature is an apparatus with cutters attached to a standard, and traversing round with their carrier upon a centre, by means of which the upper and lower edges of the cask are cut round and grooved, called chining, for the purpose of receiving the heads. Thirdly, an apparatus not very dissimilar to the last, by which the straight pieces of wood designed for the heads of the cask are held together, and cut to the circular figure required, and also the bevelled edges produced. And fourthly, a machine in which the cask is made to revolve upon an axis, and cutting tool to traverse for the purpose of shaving the external part of the cask, and bringing it to a smooth surface.

434

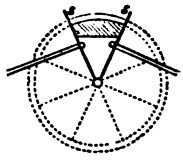

The pieces of wood intended to form the staves of the cask having been cut to their required length and breadth, are placed upon the slide-rest of the first mentioned machine, and confined by cramps; and the guide, which is a flexible bar, having been previously bent to the intended curve of the stave and fixed in that form, the rest is then slidden forward upon the bench by the hand of the workman, which as it advances (moving in a curved direction) brings the piece of wood against the edge of the revolving circular saw, by which it is cut to the curved shape desired.

The guide is a long bar held by a series of movable blocks fitted to the bench by screws, and is bent to any desired curve by shifting the screws; the edge of the slide-rests which holds the piece of wood about to be cut, runs against the long guide bar, and of consequence is conducted in a corresponding curved course. The circular saw receives a rapid rotatory motion by means of a band of rigger from any first mover; and the piece of wood may be shifted laterally, by means of racks and pinions on the side-rest, by the workman turning a handle, which is occasionally necessary in order to bring the piece of wood up to, or away from, the saw.

The necessary number of staves being provided, they are then set round within a confining hoop at bottom, and brought into the form of a cask in the usual way, and braced by temporary hoops. The barrel part of the cask being thus prepared, in order to effect the chining, it is placed in a frame upon a platform, which is raised up by a treddle lever, that the end of the barrel may meet the cutters in a sort of lathe above: the cutters are then made to traverse round within the head of the barrel, and, as they proceed, occasionally to expand, by which means the bevels and grooves are cut on the upper edge of the barrel, which is called chining. The barrel being now reversed, the same apparatus is brought to act against the other end, which becomes chined in like manner.

The pieces of wood intended to form the heads of the cask are now to be cut straight by a circular saw in a machine similar to the first described; but, in the present instance, the slide-rest is to move forward in a straight course. After their straight edges are thus produced, they are to be placed side by side, and confined, when a scribing cutter is made to traverse round, and cut the pieces collectively into the circular form desired for heading the cask.

The cask having now been made up, and headed by hand as usual, it is placed between centres, or upon an axle in a machine, and turned round by a rigger or band with a shaving cutter sliding along the bar above it, which cutter, being made to advance and recede as it slides along, shaves the outer part of the cask to a smooth surface.

Mr. Smart cuts the edges of thin staves for small casks on the ordinary saw-bench,

435

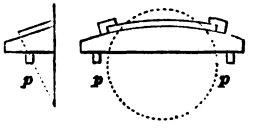

436

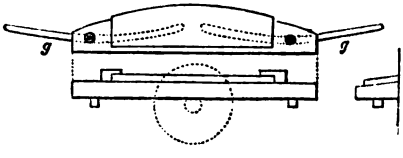

by fixing the thin wood by two staples or hooks to a curved block, the lower face of which is bevelled to give the proper chamfer to the edges, *fig.* 435. One edge having

Digitized by Google

been cut, the stave is released, changed end for end, and refixed against two pins which determine the position for cutting the second edge, and make the staves of one common width. The curved and bevelled block is guided by two pins *p p*, which enter a straight groove in the bench parallel with the saws. This mode of bending is from various reasons found inapplicable to large staves, and these are cut, as shown in three views, *fig.* 436, whilst attached to a straight bed, the bottom of which is also bevelled to tilt the stave for chamfering the edge. To give the curve suitable to the edge, the two pins on the under side of the block run in two curved grooves *g g* in the saw-bench, which cause the staves to sweep past the saw in the arc of a very large circle, instead of in a right line, so that the ends are cut narrower than the middle. Mr. Smart observes (*Trans. Soc. of Arts*, vol. xlvii.) that in staves cut whilst straight, the edges become chamfered at the same angle throughout, which although theoretically wrong is sufficiently near for practice; the error is avoided when the staves are cut whilst bent to their true curvature.

The necessary flexibility which is required for bending the staves of casks is obtained by steaming them in suitable vessels in contact with rigid moulds. By Taylor's patent machinery for making casks, the blocks intended for the staves are cut, out of white Canada oak, to the size of thirty inches by five, and smaller. They are well steamed, and then sliced into pieces one-half or five-eighths of an inch thick, at the rate of 200 a minute, by a process far more rapid and economical than sawing, the instrument being a revolving iron plate, of 12 or 14 feet diameter, with two radical knives arranged somewhat like the irons of an ordinary plane or spoke-shave.

CASSAREEP or CASSIREEPE. The concentrated juice of the roots of the bitter cassava, flavoured by aromatics. It is used to flavour soups, and other dishes, and is the basis of the West Indian dish *pepper-pot*. In French Guiana, the term *cabion* is applied to a similar condiment.—*Pereira.*

CASSAVA. (*Cassave*, Fr.; *Cassava*, Germ.) *Cassava*, or *Cassada Meal*, are names given to the starch of the root of the *Manihot utilissima*, prepared, in the following manner, in the West Indies, the tropical regions of America, and upon the African coast. The tree belongs to the natural family of the *Euphorbiaceæ*.

The roots are washed, and reduced to a pulp by means of a rasp or grater. The pulp is put into coarse strong canvas bags, and thus submitted to the action of a powerful press, by which it parts with most of its noxious juice (used by the Indians for poisoning the barbs of their arrows). As the active principle of this juice is volatile, it is easily dissipated by baking the squeezed cakes of pulp upon a plate of hot iron. Fifty pounds of the fresh juice, when distilled, afford, at first, 3 ounces of a poisonous water, possessing an intolerable offensive smell; of which 35 drops being administered to a slave convicted of the crime of poisoning, caused his death in the course of 6 minutes, amid horrible convulsions.*

The pulp, dried in the manner above described, concretes into lumps, which become hard and friable as they cool. They are then broken into pieces, and laid out in the sun to dry. In this state they afford a wholesome nutriment, and are habitually used as such by the negroes, as also by many white people. These cakes constitute the only provisions laid in by the natives, in their voyages upon the Amazon. Boiled in water with a little beef or mutton, they form a kind of soup similar to that of rice.

The Cassava cakes sent to Europe are composed almost entirely of starch, along with a few fibres of the ligneous matter. It may be purified by diffusion through warm water, passing the milky mixture through a linen cloth, and evaporating the strained liquid over the fire, with constant agitation. The starch, dissolved by the heat, thickens as the water evaporates, but, on being stirred, it becomes granulated, and must be finally dried in a proper stove. Its specific gravity is 1·530—that of the other species of starch.

The product obtained by this treatment is known in commerce under the name of *tapioca*; and being starch very nearly pure, is often prescribed by physicians as an aliment of easy digestion. A tolerably good imitation of it is made by heating, stirring, and drying potato starch in a similar way.

The expressed juice of the root of manioc contains in suspension a very fine fecula, which it deposits slowly upon the bottom of the vessels. When freed by decantation from the supernatant liquor, washed several times and dried, it forms a beautiful starch, which creaks on pressure with the fingers. It is called *cipipa*, in French Guiana; it is employed for many delicate articles of cookery, especially pastry, as also for hair powder, starching linen, &c. This is imported into England from Rio Janeiro as Brazilian arrow root.

* Memoir of Dr. Fermin, communicated to the Academy of Berlin, concerning experiments made at Cayenne, upon the juice of the Manioc.

Digitized by Google

Cassava flour, as imported, may be distinguished from arrow root and other kinds of starch, by the appearance of its particles viewed in a microscope. They are spherical, all about $\frac{1}{1000}$th of an inch in diameter, and associated in groups; those of potato starch are irregular ellipsoids, varying in size from $\frac{1}{300}$th to $\frac{1}{3000}$th of an inch; those of arrow root have the same shape nearly, but vary in size from $\frac{1}{500}$th to $\frac{1}{800}$th of an inch; those of wheat are separate spheres $\frac{1}{1000}$th of an inch.

The formula of Cassava starch is, $C^{12}H^{10}O^{10}$, like the other starches. See TAPIOCA.

Cassava has for some years been imported into France, from Martinique, as *la mousache* and *la cipipa*.

CASSELL YELLOW. An oxychloride of lead. It is the same as *Patent Yellow* and *Turner's Yellow*.

CASSIA. (*Cinnamomum cassia.*) A bark employed for flavouring. The cinnamon cassia is a native of China, and is cultivated in Java. It is imported from Singapore, Calcutta, Bombay, and Manilla This bark is imported principally for the sake of its essential oil, which it yields by distillation. One hundred pounds of good cassia bark will thus yield 12 oz. of essential oil of cassia. It is principally consumed in scenting what is called Brown Windsor Soap. In 1864 we *imported* as follows:

CASSIA LIGNEA:

	lbs.	Computed Real Value.
From Philippine Islands	61,600	£2,420
China	755,765	29,172
British India:		
Singapore and Eastern Straits Settlements	50,154	1,949
Other Parts	12,385	474
	879,904	34,015
CASSIA VERA:		
From British India:		
Singapore and Eastern Straits Settlements	5,732	£77
Other Parts	300	4
	6,032	81

Our *Exports* of Foreign and Colonial Cassia amounted to 857,562 lbs., valued at £32,781.

CASSIA BUDS. (*Flores cassiæ immature.*) The cassia buds and bark are both obtained from the same tree (*Reeves*). "According to the latest observations which the elder Nees has made known, cassia buds are the calyces (*Fruchtkelche*) of *Cinnamomum aromaticum*, about $\frac{1}{4}$th of their normal size. It is also said that they are collected from *Cinnamomum dulce* which is found in China."—*Martius*, quoted by *Pereira*.

The *Exports* of Cassia buds from Canton in 1831 were 177,886 lbs.: and in 1832 the *imports* into Great Britain were 75,173 lbs. In 1856 the *imports* were 119,270 lbs., and in 1864 45,986 lbs.

CASSIA FISTULA. The pudding pipe tree or purging cassia. The pods of this tree are imported from Madras and Ceylon, from Barbadoes, and from Carthagena and Savanilla. In 1864 we *imported* of the pods of cassia fistula 5,500 lbs.

CASSIE. The *Acacia Farnesiana* is grown extensively in the South of France for the sake of its fragrant flower balls: these are termed *Cassie* and used in perfumery. The young plants are raised from seed in beds: in the third year they are planted out in fields and require for each tree about twelve square feet of land. When in maturity *Acacia Farnesiana* will yield flowers to the value of £30 an acre.

CASSIS, the black currant (*Ribes nigra*, Linn.), which was formerly celebrated for its medicinal properties with very little reason.

The only technical use to which it is now applied is in preparing the agreeable *liqueur* called *ratafia*, by the following French recipe:—Stone and crush 3 pounds of black currants, adding to the magma 1 drachm of cloves, 2 drachms of cinnamon, 4 quarts of spirits of wine, at 98° Baumé, and 2½ pounds of sugar. Put the mixture into a bottle which is to be well corked; let it digest for a fortnight, shaking the bottle once daily during the first 8 days: then strain through a linen cloth, and finally pass through filtering paper.

CASSITERITE. Oxide of Tin; Stream Tin. Stream tin is the alluvial *débris* of tin veins. (See TIN ORE.) This is one of the objectionable names, of which a very great number have, of late years, been introduced into the science of Mineralogy.

Digitized by Google

CASSIUS, *purple powder of*. A preparation used in the arts as a colour, chiefly for stained glass and porcelain. It is also employed in medicine by some French physicians, and has been prepared in the following manner: — 10 parts of acid chloride of gold are dissolved in 2000 parts of water. In another vessel, 10 parts of pure tin are dissolved in 10 parts of nitric acid mixed with 20 parts of hydrochloric acid, and this solution is diluted with 1000 parts of distilled water. The solution of tin is added by degrees to that of the acid chloride of gold, so long as any precipitate results. This is allowed to subside; it is then washed, filtered, and then dried at a very gentle heat. The tin salt above used contains both the protoxide and binoxide in certain proportions. The double compound of chloride of tin with sal ammoniac, called the pink salt of tin, is the preferable form; as it is not altered by the atmosphere, is of definite composition, and when boiled with metallic tin it takes up just so much as will form the protochloride: 100 parts of pink salt require for this purpose 10·7 parts of metallic tin.

Professor Graham, in his "Elements of Chemistry," gives the following account of the purple of cassius, and of its preparation. "When protochloride of tin is added to a dilute solution of gold, a purple powder falls. It is obtained of a finer tint when protochloride of tin is added to a solution of the sesquichloride of iron till the colour of the liquid takes a shade of green, and the liquid in that state added, drop by drop, to a solution of sesquichloride of gold, free from nitric acid, and very dilute. After 24 hours a brown powder is deposited, which is slightly transparent, and purple-red, by transmitted light: when dried and rubbed to powder, it is of a dull blue colour. Heated to redness it loses a little water, but no oxygen, and retains its former appearance. If washed with ammonia, on the filter, while still moist, it dissolves, and a purple liquid passes, which rivals the hypermanganate of potash in beauty. . . . . It may also be formed by fusing together 2 parts of gold, 3½ parts of tin, and 15 parts of silver, under borax, to prevent the oxidation of the tin, and treating the alloy with nitric acid, to dissolve out the silver; a purple residue is left, containing the tin and gold that were employed."

"Berzelius proposed the theory that the powder of Cassius may contain the true protoxide of gold combined with sesquioxide of tin, $AuOSn^2O^3$, a kind of combination containing an association of three atoms of metal, which is exemplified in black oxide of iron, spinele, Franklinite, and other minerals. . . . . A glance at its formula shows how readily the powder of Cassius, as thus represented, may pass into gold and binoxide of tin, $AuOSn^2O^3 = Au + 2SnO_2$." — *Graham* and *Watts*.

CASTILE SOAP, or SPANISH SOAP, is prepared with olive oil and a solution of caustic soda. There are two varieties, the *white* and the *marbled*. The marbled appearance is produced in the soap, by adding, as soon as it is made and separated from the spent ley, a fresh quantity of ley, and immediately a solution of the protosulphate of iron. A precipitate of oxide of iron is at once formed, and this gives the dark coloured streaks to the soap. By exposure to the air these streaks become red, in consequence of the conversion of the black oxide of iron into the red or sesquioxide. See SOAP.

CAST-IRON SCOURING. Cast-iron surfaces are said to be easily scoured by adding a little of any kind of organic matter, such as glycerine, stearine, naphthaline, creosote to dilute sulphuric acid; zinc and brass yield to the same method, with great economy of labour, time, and material.

CASTOR. The Beaver. See FURS.

CASTOR, or CASTOREUM. This name is given to a secretion of the Beaver (*Castor fiber*), contained in pear-shaped cellular organic sacs, placed near the genital organs of both the male and female animals. It is a substance analogous to civet and musk, of a consistence similar to thick honey. It has a bitter acrid taste; a powerful penetrating, fœtid, and very volatile smell.

Several chemists, and in particular Bouillon, Lagrange, Laugier, and Hildebrandt have examined castor, and found it to be composed of a resin, a fatty substance, a volatile oil, an extractive matter, benzoic acid, and some salts.

The mode of preparing it is very simple. The sacs are cut off from the castors when they are killed, and are dried to prevent the skin being affected by the weather. In this state the interior substance is solid, of a dark colour, and a faint smell; it softens with heat, and becomes brittle by cold. Its fracture betrays fragments of membranes, indicating its organic structure. When chewed it adheres to the teeth somewhat like wax; it has a bitter, slightly acrid and nauseous taste.

The castor bags, as imported, are often joined in pairs by a kind of ligature. Sometimes the substance which constitutes their value is sophisticated; a portion of the castor being extracted, and replaced by lead, clay, gums, or some other foreign matters. This fraud may be easily detected, even when it exists in a small degree, by the absence of the membranous partitions in the interior of the bags, as well as by the altered smell and taste.

Digitized by Google

Castor is used to a small extent in medicine and in perfumery manufacture, the latter particularly when ambergris is scarce.

In English commerce, two varieties of American castor are made: one called the Hudson's Bay and the other the Canadian—though both are imported by the Hudson's Bay Company.

CASTORINE. A substance existing in castor. (See CASTOR.) It is obtained by treating castor with hot alcohol, and filtering through a Platamour's ebullition funnel. On cooling, the alcohol deposits crystals of a fatty substance. The castorine is retained in the mother liquor, and is procured by evaporation on the water-bath to a small bulk, and then setting aside to allow crystals to form. Castorine crystallises in needles possessing a slight odour of castoreum.—C. G. W.

CASTOR OIL. The expressed oil of the seeds of the *Palma Christi* or *Ricinus communis*, a native tree of the West Indies and South America; but which has been cultivated in France, Italy, and Spain.

In England the castor oil is expressed from the seeds by means of powerful hydraulic presses fixed in rooms artificially heated. It is purified by repose, decantation, and filtration, being bleached in pale-coloured Winchester quart bottles, which are exposed to light on the tops of houses. Unbleached castor oil is certainly more acrid and possesses more purgative properties than such as has been long exposed to the light; we may therefore infer that the *acrid resin* of the oil has undergone some chemical change. In America the oil is expressed from the seeds by pressure between heated plates. In the East Indies, women shell the fruit; the seeds are placed between rollers and crushed; they are then put into hemp cloths, and pressed in the hydraulic press. The oil thus procured is afterwards heated with water in a tin boiler until the water boils, by which the mucilage or albumen is separated as a scum. The East Indian castor oil is sold in England as *cold drawn*. The following is the composition of castor oil:—

	Ure.	Saussure.
Carbon	74·00	74·178
Hydrogen	10·29	10·034
Oxygen	15·71	14·718
	100·00	100·000

CATALYSIS. A term introduced to denote the very peculiar phenomenon of one body establishing, by its mere presence, a like condition, in another body, to that which exists in itself. Thus a piece of meat undergoing the putrefactive fermentation, almost immediately sets up a similar action in fresh meat, or produces in a saccharine fluid that motion which is known as vinous fermentation. The action of the yeast plant,—a living organisation,—establishes an action throughout a large quantity of an infusion of malt,—*fermentation*, or that disturbance which leads to the conversion of sugar into alcohol. This catalytic power is ill understood, and we are content to hide the imperfection of our knowledge under a sounding name.

CATECHINE. *Catechuic Acid.* When *Gambir catechu* is treated with water, an insoluble residue is left, which has been termed by Nees *resinous tannin*. Its composition is $C^{15}H^6O^6$.

CATECHU, a Japanese word, signifying juice formerly called *Terra Japonica*, is an extract made from the wood of several plants which grow in Bombay, Bengal, and other parts of India. Catechu is prepared by boiling the chips of the interior of the trunk in water, evaporating the solution to the consistence of syrup over the fire, and then exposing it in the sun to harden. It occurs in flat rough cakes, and under two forms. The first, or the Bombay, is of uniform texture, of a dark red colour, and of specific gravity 1·39. The second is more friable and less solid. It has a chocolate colour, and is marked inside with red streaks. Its specific gravity is 1·28.

According to Sir H. Davy, these two species are composed as follows:—

	Bombay.	Bengal.
Tannin	54·5	41·5
Extractive	34·0	36·5
Mucilage	6·5	8
Insoluble matters, sand, and lime	5	7
	100·0	100·0

Areka nuts are also found to yield catechu: and catechu is prepared from them in Ceylon, for which purpose they are cut into pieces, watered in an earthen pot with solution of nitre, and have a little of the bark of a species of mimosa added to them. The liquor is then boiled with the nuts, and affords an inspissated decoction.

Digitized by Google

Good catechu is a brittle compact solid, of a dull fracture. It has no smell, but a very astringent taste. Water dissolves the whole of it, except the earthy matter, which is probably added during its preparation. Alcohol dissolves its tannin and extractive. The latter may be oxidised, and thus rendered insoluble in alcohol, by dissolving the catechu in water, exposing it for some time to a boiling heat, and evaporating to dryness.

The tannin of catechu differs from that of galls, in being soluble in alcohol, and more soluble in water. It precipitates iron of an olive colour, and gelatine in a mass which gradually becomes brown.

It has been long employed in India for tanning skins, where it is said to effect this object in five days. Sole leather has been completely tanned by it in this country in ten days, the ox-hide having been made into a bag, with the hair outside, and kept filled with the solution of catechu. In India it has also been used to give a brown dye to cotton goods, and of late years it has been extensively introduced into the calico-print works of Europe. The salts of copper with sal ammoniac cause it to give *a bronze colour* which is very permanent; the proto-muriate of tin, *a brownish yellow*; the per-chloride of tin, with the addition of nitrate of copper, *a deep bronze hue*; acetate of alumina alone, *a reddish brown*, and, with nitrate of copper, *a reddish-olive grey*; nitrate of iron, *a dark-brown grey*. For dyeing a golden coffee brown, catechu has entirely superseded madder; one pound of it being equivalent to six pounds of this root.

Catechu has been recommended for preventing the formation of incrustations in steam boilers, or facilitating their removal when formed. As much of this extract as will slightly colour the water is required.

Bombay Catechu is obtained from the *Areca Catechu*.

Bengal Catechu from the Acacia (Mimosa) Catechu.

Gambir Catechu from the *Uncaria Catechu*, and

Nubian Catechu from the fruits of gummy Acacias growing in Egypt and Nubia.

CATTEMUNDOO. A name given to an elastic gum or hydro-carbon obtained from some species of plants in India.

CATGUT. (*Corde à boyau*, Fr.; *Darmsaite*, Germ.) The name given to cords made of the twisted intestines of the sheep. The guts, being taken while warm out of the body of the animal, are to be cleared of feculent matter, freed from any adhering fat, and washed in a tub of water. The small ends of all the intestines are next to be tied together, and laid on the edge of the tub, while the body of them is left to steep in some water, frequently changed, during two days, in order to loosen the peritoneal and mucous membranes. The bundle of intestines is then laid upon a sloping table which overhangs the tub, and their surface is scraped with the back of a knife, to try if the external membrane will come away freely in breadths of about half their circumference. This substance is called by the French manufacturers *filandre*, and the process *filer*. If we attempt to remove it by beginning at the large end of the intestine, we shall not succeed. This *filandre* is employed as thread to sew intestines, and to make the cords of rackets and battledores. The flayed guts are put again into fresh water, and after steeping a night, are taken out and scraped clean next day, on the wooden bench with the rounded back of a knife. This is called *curing the gut*. The large ends are now cut off, and sold to the pork-butchers. The intestines are again steeped for a night in fresh water, and the following day in an alkaline lixivium made by adding 4 ounces of potash, and as much pearlash, to a pail of water containing about 3 or 4 imperial gallons. This ley is poured in successive quantities upon the intestines, and poured off again, after 2 or 3 hours, till they are purified. They are now drawn several times through an open brass thimble, and pressed against it with the nail, in order to smooth and equalise their surface. They are lastly sorted, according to their sizes, to suit different purposes.

Whipcord is made from the above intestines, which are sewed together endwise by the *filandre*, each junction being cut aslant, so as to make it strong and smooth. The cord is put into the frame, and each end is twisted separately; for whip-cord is seldom made out of two guts twisted together. When twisted, it is to be sulphured once or twice. It may also be dyed black with common ink, pink with red ink, which sulphurous acid changes to pink, and green with a green dye which the colour dealers sell for the purpose. The guts take the dyes readily. After being well smoothed, the cord is to be dried, and coiled up for sale.

Hatter's Cord for Bowstrings. — The longest and largest intestines of sheep, after being properly treated with the potash, are to be twisted 4, 6, 8, 10, or 12 together, according to the intended size of the cord, which is usually made from 15 to 25 feet long. This cord must be free from seams and knots. When half dry, it must be exposed twice to the fumes of burning sulphur; and, after each operation, it is to be well stretched and smoothed: it should be finally dried in a state of tension.

Digitized by Google

Clockmaker's Cord.— This cord should be extremely thin, and be therefore made from very small intestines, or from intestines slit up in their length by a knife fitted for the purpose, being a kind of lancet surmounted with a ball of lead or wood. The wet gut is strained over the ball which guides the knife, and the two sections fall down into a vessel placed beneath. Each hand pulls a section. Clockmakers also make use of stronger cords made of 2 or more guts twisted together.

Fiddle and Harp Strings.—These require the greatest care and dexterity on the part of the workmen. The treble strings are peculiarly difficult to make, and are made at Naples, probably because the Neapolitan sheep, from their small size and leanness, afford the best raw material.

The first scraping of the guts intended for fiddle-strings must be very carefully performed; and the alkaline leys being clarified with a little alum, are added, in a progressively stronger state from day to day, during 4 or 5 days, till the guts are well bleached and swollen. They must then be passed through the thimble, and again cleansed with the lixivium; after which they are washed, spun, or twisted and sulphured during two hours. They are finally polished by friction, and dried. Sometimes they are sulphured twice or thrice before being dried, and are polished between horsehair cords.

It has been long a subject of complaint, as well as a serious inconvenience to musicians, that catgut strings cannot be made in England of the same goodness and strength as those imported from Italy. These are made of the peritoneal covering of the intestines of the sheep; and, in this country, they are manufactured — at Whitechapel, and probably elsewhere, — in considerable quantity; the consumption of them for harps, as well as for the instruments of the violin family, being very great. Their chief fault is weakness; whence it is difficult to bring the smaller ones, required for the higher notes, to concert pitch; maintaining at the same time, in their form and construction, that tenuity or smallness of diameter which is required to produce a brilliant and clear tone.

The inconvenience arising from their breaking when in use, and the expense in the case of harps, where so many are required, are such as to render it highly desirable to improve a manufacture which, to many individuals may, however, appear sufficiently contemptible.

It is well known to physiologists, that the membranes of lean animals are far more tough than of those animals which are fat or in high condition; and there is no reason to doubt that the superiority of the Italian strings arises from the state of the sheep in that country. In London, where no lean animals are slaughtered, and where, indeed, an extravagant and useless degree of fattening, at least for the purpose of food, is given to sheep in particular, it is easy to comprehend why their membranes can never afford a material of the requisite tenacity. It is less easy to suggest an adequate remedy; but a knowledge of the general principle, should this notice meet the eyes of those interested in the subject, may at least serve the purpose of diminishing the evil and improving the manufacture, by inducing them to choose in the market the offal of such carcases as appear least overburthened with fat. It is probable that such a manufacture might be advantageously established in those parts of the country where the fashion has not, as in London, led to the use of meat so much overfed; and it is equally likely, that in the choice of sheep for this purpose, advantage would arise from using the Welsh, the Highland, or the Southdown breeds, in preference to those which, like the Lincoln, are prone to excessive accumulations of fat. It is equally probable that sheep dying of some of the diseases accompanied by emaciation, would be peculiarly adapted to this purpose.

That these suggestions are not merely speculative is proved by comparing the strength of the membranes in question, or that of the other membranous parts, in the unfattened Highland sheep, with that of those found in the London markets.

CATHARTINE. A bitter, non-azotised, purgative substance found in senna. Its formula is not known. To prepare it, an alcoholic extract of senna leaves is to be evaporated to dryness, and then treated with water as long as anything is dissolved. The aqueous solution contains the cathartine mixed with several impurities. A considerable amount of the latter may be got rid of by adding a solution of acetate of lead as long as a precipitate is formed, and then filtering through a calico bag.

CATLINITE. A clay-stone so called after Catlin the American traveller. It is carved into tobacco pipes by the Indians.

CATSUP. A name given by Dr. Kitchener to Ketchup. See KETCHUP.

CAT'S EYE. A translucent quartz, presenting peculiar internal reflections. This effect is said to be owing to filaments of asbestos. When cut *en cabochon*, it is esteemed as an ornamental stone.

Digitized by Google

CAUSTIC. Any chemical substance corrosive of the skin and flesh; as potash, called common caustic,—and nitrate of silver, called lunar caustic, by surgeons.

CAVIARE. The salted roe of certain species of fish, especially the sturgeon. This product forms a considerable article of trade, being exported annually from the town of Astrakhan alone, upon the shores of the Caspian sea, to the amount of several hundred tons. The Italians first introduced it into Eastern Europe from Constantinople, under the name of *caviale*. Russia has now monopolised this branch of commerce. It is prepared in the following manner:—

The female sturgeon is gutted; the roe is separated from the other parts, and cleaned by passing it through a very fine searce, by rubbing it into a pulp between the hands: this is afterwards thrown into tubs, with the addition of a considerable quantity of salt; the whole is then well stirred, and set aside in a warm apartment. There is another sort of caviare,—the compressed,—in which the roe, after having been cured in strong brine, is dried in the sun, then put into a cask, and subjected to strong pressure.

CAWK. The English miner's name for sulphate of baryta, or heavy spar.

CEDAR. (*Cédre*, Fr.; *Ceder*, Germ.) The cedar of Lebanon, or great cedar (*Pinus cedrus*) is a cone-bearing tree. This tree has been famous since the days of Solomon, who used it in the construction of the temple. The wood has been obtained from Crete and Africa.

Specimens have also been procured from Morocco, showing the probability that the range of the tree not only extends over the whole group of mountains which is situate between Damascus and Tripoli in Syria, and which includes the Libanus and Mounts Amanus and Taurus of antiquity, and various others,—but that its distribution on the mountainous regions of North Africa is extensive.

Indeed, if we are to suppose that the cedar and the cedar wood mentioned by many of the ancient writers referred exclusively to the Lebanon species, we must believe that its distribution at one period extended over countries where no trace of its having existed now remains. Egypt, Crete, and Cyprus are mentioned by Pliny and Theophrastus as native habitats of the cedrus; we may thus fairly infer that the *cedrus* of the ancients as frequently had reference to the other coniferæ as to the Lebanon species.

The pencil cedar is the *Juniperus Virginiana*. It is imported from America in pieces from 6 to 10 inches square. The grain of the wood is remarkably regular and soft, on which account principally it is used for the manufacture of pencils, and from its agreeable scent for the inside of small cabinets; it is also made into matches for the drawing-room.

The general use of the cedar wood dates from the highest antiquity. Pliny makes mention of cedar wood and the uses to which it was applied, and cites, as examples of its durability and imperishable nature, the timber of a temple of Apollo at Utica, in Africa, which, when nearly 2000 years old, was found to be perfectly sound, — and the famous statue of Diana in the temple of Saguntum in Spain. Cedria, an oil or resin extracted from a cedar, was also, according to Vitruvius, used to smear over the leaves of the papyrus to prevent the attacks of worms; and Pliny states that the Egyptians applied it with other drugs in the preparation of their mummies; but whether this extract was obtained from the Lebanon cedar or from trees belonging to the genus *Cupressus* or *Juniperus*, which also afford odoriferous resins, it is now impossible to ascertain.

In regard to the cedar and cedar wood mentioned in profane history, it is difficult, from what we have already stated, to determine what has reference to the true cedar, and what belongs to other coniferous species; all that we can know for certainty is that a wood called cedar, distinguished for its incorruptible nature, was frequently used for purposes most important in the eyes of the pagan, viz., in the building and decoration of their temples, and for the statues or images of their heroes and gods.

The peculiar balsamic odour of cedar has long been held as a means to preserve articles from the attacks of insects; chips and shavings of the wood have been in this way kept in collections of linen, papers, and objects of preservation. Cabinets have been recommended, or at least the drawers and fittings, to be made of cedar. That the popular character may receive its due limitation, it may be useful to call attention to some facts when cedar is employed as a means of preservation.

That the odoriferous substance when diffused may affect some forms of organic life, is not disputed, but it is as probable some of the effect may be due to covering the insect with a coating of varnish, alike irritating and interfering with the texture of the surfaces of the body; but the rule cannot be general; if the creatures have a sufficient hardihood they may, and indeed do, attack the wood itself.

Digitized by Google

The following cases will show that the substances emanating from cedar may produce unexpected interference. Mr. Vulliamy states that George III. had a cabinet in the observatory at Kew with drawers of cedar wood in them; watches were placed with the intention of keeping them going. In a short time they all came to rest; the experiment, however, repeated had the same result: on examination, the oil used in different parts of the watches was found to be completely changed into a substance like gum. Mr. Farey's observations, also communicated to the Institution of Civil Engineers, still more show the extraordinary atmosphere produced in close cabinets of cedar wood, and of the effects upon delicate objects. The late Mr. Smith, of Derby having shown him a small collection of minerals which had been locked up in closely fitted drawers of cedar wood; on opening the drawers for the first time after some months, the minerals were found to be covered with a gummy matter having the strong odour of cedar, and troublesome to remove; the bright surface of the crystals appeared as if varnished in an unskilful manner. The cedar had given off a vapour that had condensed on all the minerals, and the same effect might be expected to be produced upon watches, metals, and other substances.

Indeed, cases are known where the action of cedar has produced unpleasant effects, and not without exciting the idea of remote danger. A bundle or package of black lead pencils, the wood as usual of cedar, had been kept in stock upon a shelf wrapped in paper: by the heat of the gas, &c., the cedar vapour had attacked the paper and its materials; the paper seemed thick and stiffened as with varnish, forming one mass with the pencils, and damaging other paper and articles of stock near, while the paper was rendered highly inflammable, burning with a great flame. This case was laid before the officers of the Society of Arts, who are desirous of extending the proper uses of cedar wood, and of avoiding the evils arising from unsuspected chemical action.

White cedar is a native of North America, China, and Cochin China; in the United States it occupies large tracts, denominated *cedar swamps*. The wood is soft, smooth, and of an aromatic smell, and internally of a red colour, permanent in shape, very durable, and is esteemed as a material for fences. Large quantities of shingles are made of it; it is a favourite material for wooden wares or the nicer kinds of coopers' work.

Colonel Lloyd, speaking of another species of cedar, the *Juniperus Bermudiana*, says, "Up to this time there are great quantities of the finest cedar growing in the British island of Bermuda, and the best ships and schooners are always built of it; it is imperishable."

The cedar known to cabinet makers as the Havannah cedar is the wood of the *Cedrela odorata* of Linnæus, and belongs to the same natural order as mahogany. All the cigar boxes from Havannah are made of this kind of cedar; it is imported from the island of Cuba, and is used for the insides of drawers and wardrobes.

New South Wales produces a cedar, *Cedrela trona*, somewhat similar to the Havannah, but more red in colour.

A similar kind is found in the East Indies; the Himalayan cedar, *Juniperus excelsa*, is harder and less odoriferous than the pencil cedar.

In the sketch of the route and progress of Lieutenant A. Burnes and Dr. Gerard (by a recent traveller, vol. i. "Journal of Asiatic Society," Bengal, Calcutta, 1832), in their adventurous journey to explore the Oxus, it is stated:—

"While on the banks of the Jelum they were much struck by the immense size of the firs floated down the river. The houses in all the towns along its banks are roofed therewith.

"Immense cedar trees were seen rolled down from the hills; it was these which supplied materials for Alexander's fleet. One tree measured 13 feet in girth, which may afford some idea of their applicability."

There is much confusion in the application of the term cedar, several trees which are not cedars being so called.

The cedar of Lebanon is usually called *Pinus cedrus*, but sometimes *Cedrus Libanus*. The lofty *deodara*, a native of the Himalayas, with fragrant and almost imperishable wood, and often called the Indian cedar, is sometimes referred to the genus *pinus*, and sometimes to that of *cedrus* or *larix*, with the specific name of *deodara*.

The wood of several coniferæ is, however, called cedar. The wood of *Juniperus Virginiana* is called the red or pencil cedar, and that of *J. Bermudiana* is called Bermuda cedar; that of *J. Barbadensis* is called Barbadoes cedar, while the juniper of the north of Spain and south of France and of the Levant is called *J. oxycedrus*. The white cedar of North America, a less valuable wood than the red cedar, is yielded by *Cupressus thyoides*, and the cedar wood of Japan, according to Thunberg, is a species of cypress.

Digitized by Google

The name cedar is, however, applied to a number of woods in our different colonies, which are in no way related to the *coniferæ*; thus the cedar of Guiana is the wood of *Icica altissima*; the white wood or white cedar of Jamaica is *Bignonia leucoxylon*; and bastard cedar is *Guazuma erlimfolia*. In New South Wales again the term white cedar is applied to *Melia arzedarach*, and red cedar to that of *Flindersia australis*, as well as to the wood toon tree, or *Cedrela toona*.

Cedar wood yields a very fine essential oil by distillation, in the proportion of about 15 oz. to every hundred pounds weight of wood. The perfumery makers find a considerable use for essential oil of cedar. It is now known that all the odoriferous woods, such as sandal wood, myall wood, rose wood, yield their perfumes at the ordinary temperature. If these woods in chips be put into a glass jar for a year the interior will be coated with a heavy dew of perfume.

CEDAR GUM. A gum used for many medicinal purposes, obtained from the branches and cones of the *Widdingtonia juniperoides*.

CEDRA (*cedrat*, Fr.) is the fruit of a species of orange, citron, or lemon, a tree which bears the same name. Its peel is very thick, and covered with an epidermis which encloses a very fragrant and highly prized essential oil. The preserves flavoured with it are very agreeable. The citrons are cut into quarters for the dry comfits, but are put whole into the liquid ones. The liquorist-perfumer makes with the peel of the *cedra* an excellent *liquor*; for which purpose, he plucks them before they are quite ripe; grates down the peel into a little brandy, or cuts them into slices, and infuses these in the spirits. This infusion is distilled for making perfume; but the flavour is better when the infusion itself is used. See PERFUMERY.

CEDRIRET. A singular compound of unknown composition existing in wood tar.

CELESTINE. (*Strontiane sulfatée*, Fr.; *Cölestris*, Germ.) Native sulphate of strontia. Celestine is usually associated with secondary or Silurian limestone or sandstone, also with trap-rocks; and it is found in the red marl formations associated with gypsum. In Sicily it is commonly associated with sulphur. The celestine of Girgenti was found by Stromeyer to be composed as follows:—

Sulphuric acid	43·08
Strontian	56·35
Red oxide of iron	0·03
Carbonate of lime	0·09
Water	0·18

This mineral is found in Sicily, at Bey in Switzerland and Corril in Spain. It exists at Aust Ferry near Bristol, in trap-rocks near Tantellan in the East Lothians, and at Calton Hill, Edinburgh. Dana gives several localities for celestine in America. It is decomposed by ignition with charcoal into sulphide of strontia, which is converted into the nitrate by the action of nitric acid. The nitrate of strontian is employed for the production of the red light in theatrical fire-works.

CELLULAR BEAM. An application of wrought iron; in which wrought iron plates are rivetted with angle irons in the form of longitudinal cells with occasional cross streets. Fairbairn *on Cast and Wrought Iron*. See TUBULAR BRIDGE.

CELLULOSE. The essential part of the solid framework of plants. See Watts' "Dictionary of Chemistry."

CEMENTATION. A chemical process, which consists in imbedding a solid body in a pulverulent matter, and exposing both to ignition in an earthen or metallic case. In this way, iron is cemented with charcoal to form steel, and bottle glass with gypsum powder, or sand, to form Reaumur's porcelain.

CEMENTS. (*Ciments*, Fr.; *Cämente, Kitte*, Germ.) Substances which are capable of assuming the liquid form and of being applied between the surfaces of bodies so as to unite them firmly when solidifying. They are of very varied character.

Gum, glue, and paste are cements, the uses of which are well known.

Diamond cement is a preparation of isinglass and gum ammoniacum dissolved in alcohol (see AMMONIACUM GUM); it is employed to mend glass and china.

Sir John Robinson's cement he thus describes:—

"If it be wished to dissolve good isinglass in spirits of wine, it should first be allowed to soak for some time in cold water, when swelled it is to be put into the spirit, and the bottle containing it being set in a pan of cold water may be brought to the boiling point, when the isinglass will melt into a uniform jelly, without lumps or strings, which it is apt to have if not swelled in cold water previously to being put into spirits. A small addition of any essential oil diminishes its tendency to become mouldy.

"If gelatine, which has been swelled in cold water, be immersed in linseed oil and heated it dissolves, and forms a glue of remarkable tenacity, which, when once dry, perfectly resists damp, and two pieces of wood joined by it will separate anywhere

Digitized by Google

else rather than at the joint. Ordinary glue may be thus dissolved, and sometimes a small quantity of red lead in powder is added."

Shellac dissolved in alcohol, or in a solution of borax, or still better in naphtha, forms a good cement. White of egg alone, or mixed with finely sifted quicklime, will answer for uniting objects which are not exposed to moisture. The latter combination is very strong, and is much employed for joining pieces of spar and marble ornaments. A similar composition is used by copper-smiths to secure the edges and rivets of boilers; only bullock's blood is the albuminous matter used instead of white of egg. Another cement in which an analogous substance, the curd or caseum of milk is employed, is made by boiling slices of skim-milk cheeses into a gluey consistence in a great quantity of water, and then incorporating the mixture with quicklime on a slab with a muller, or in a marble mortar. When this compound is applied warm to broken edges of stoneware, it unites them very firmly after it is cold.

A cement which gradually indurates to a stony consistence may be made by mixing 20 parts of clean river sand, 2 of litharge, and 1 of quicklime, into a thin putty with linseed oil. When this cement is applied to mend broken pieces of stone, as steps of stairs, it acquires after some time a stony hardness. A similar composition has been applied to coat over brick walls, under the name of "Mastic." Portland oolite powder with a little litharge and oil makes good mastic.

The iron-rust cement is made of from 50 to 100 parts of iron borings, pounded and sifted, mixed with one part of sal ammoniac, and when it is to be applied moistened with as much water as will give it a pasty consistency. Formerly flowers of sulphur were used, and much more sal ammoniac, in making this cement, but with decided disadvantage, as the union is effected by the oxidisement, consequent expansion and solidification of the iron powder, and any heterogenous matter obstructs the effect. The best proportion of sal ammoniac is, one per cent. of the iron borings. Another composition of the same kind is made by mixing 4 parts of fine borings or filings of iron, 2 parts of potter's clay, and 1 part of pounded potsherds, and making them into a paste with salt and water. When this cement is allowed to concrete slowly on iron joints it becomes very hard.

For making architectural ornaments in relief, a moulding composition is formed of chalk, glue, and paper paste. Even statues have been made with it, the paper aiding the cohesion of the mass. Some French statuettes are so made.

Mastics of a resinous or bituminous nature which must be softened or fused by heat are the following:—

Mr. S. Varley's consists of 16 parts of whiting sifted and thoroughly dried by a red heat, adding when cold a melted mixture of 16 parts of black resin and 1 of bees'-wax, and stirring well during the cooling.

Mr. Singer's electrical and chemical apparatus cement consists of 5 lbs. of resin, 1 of bees'-wax, 1 of red ochre, and 2 tablespoonfuls of Paris-plaster, all melted together. The ochre and the plaster of Paris should be calcined beforehand, and added to the other ingredients in their melted state. The thinner the stratum of cement that is interposed, the stronger, generally speaking, is the junction.

Boiled linseed oil and red lead mixed together into a putty are often used by copper-smiths and engineers to secure joints. The washers of leather or cloth are smeared with this mixture in a pasty state.

The resin mastic alone is sometimes used by jewellers to cement by heat cameos of white enamel or coloured glass to a real stone, as a ground to produce the appearance of an onyx. Mastic is likewise used to cement false backs or doublets to stones to alter their hue.

Melted brimstone, either alone or mixed with resin and brick dust, forms a tolerably good and very cheap cement.

Plumber's cement consists of black resin 1 part, brick dust 2 parts, well incorporated by a melting heat.

The cement for coating the fronts of buildings consists of linseed oil, rendered dry by boiling with litharge, and mixed with porcelain clay in fine powder, to give it the consistence of stiff mortar. Pipe-clay would answer equally well if well dried, and any colour might be given with ground bricks or pottery. A little oil of turpentine to thin this cement aids its cohesion upon stone, brick, or wood. It has been applied to sheets of wire cloth, and in this state laid upon terraces, in order to make them water-tight; but it is little less expensive than lead.

The bituminous or black cement for bottle corks consists of pitch hardened by the addition of resin and brick dust.

In certain localities where a limestone impregnated with bitumen occurs, it is dried, ground, sifted, and then mixed with about its own weight of melted pitch, either mineral, vegetable, or that of coal tar. When this mixture is getting semifluid, it may

Digitized by Google

be moulded into large slabs or tiles in wooden frames lined with sheet iron, previously smeared over with common lime mortar, in order to prevent adhesion to the moulds, which, being in movable pieces, are easily dismounted so as to turn out the cake of artificial bituminous stone. This cement is manufactured upon a great scale in many places, and used for making Italian terraces, covering the floors of balconies, flat roofs, water reservoirs, water conduits, &c. When laid down, the joints must be well run together with hot irons. The floor of the terrace should be previously covered with a layer of Paris plaster, or common mortar, nearly an inch thick, with a regular slope of one inch to the yard. Such bituminous cement weighs 144 pounds the cubic foot; or a foot of square surface, one inch thick, weighs 12 pounds. Sometimes a second layer of these slabs or tiles is applied over the first, with the precaution of making the seams or joints of the upper correspond with the middle of the under ones. Occasionally a bottom bed, of coarse cloth or grey paper, is applied. The larger the slabs are made, as far as they can be conveniently transported and laid down, so much the better. For *hydraulic* cements, see MORTAR.

An excellent cement for resisting moisture is made by incorporating thoroughly eight parts of melted glue, of the consistence used by carpenters, with four parts of linseed oil, boiled into varnish with litharge. This cement hardens in about forty-eight hours, and renders the joints of wooden cisterns and casks air and water tight. A compound of glue with one-fourth its weight of Venice turpentine, made as above, serves to cement glass, metal, and wood to one another. The gluten of wheat, well prepared, is also a good cement. White of eggs with flour and water well mixed, and smeared over linen cloth, forms a ready lute for steam joints in small apparatus.

White lead ground upon a slab with linseed oil varnish, and kept out of contact of air, affords a cement capable of repairing fractured bodies of all kinds. It requires a few weeks to harden. When stone and iron are to be cemented together, a compound of equal parts of sulphur and pitch answers very well.

Lapidaries' cement is made of resin, tempered with bees'-wax and a little tallow, and hardened with red ochre or Spanish brown and whiting.

Opticians' cement, for fixing glasses for grinding, is made by sifted wood ashes with melted pitch, the essential oil of which is absorbed by the wood ashes, and the adhesiveness of the pitch is therefore reduced. The proportions are somewhat dependent on the temperature of the weather and the qualities of the pitch; but generally about 4 lbs. of wood ashes to 14 lbs. of pitch are employed, and the cement, if too hard and brittle, is softened with hog's lard and tallow.

Japanese cement is said to be prepared by mixing rice flower intimately with cold water, and then boiling the mixture: it is white, and dries nearly transparent. See MORTAR.

CENTRIFUGAL MACHINE. A machine in which advantage is taken of the force produced by centrifugal motion. Several of the old mills were of this description. This term has been not very correctly applied to *Barker's Mill* as it is often called; but which was fully described by *Desaguiliers* (vol. ii. p. 468), in which water is made to act on a machine by its weight. Barker's mill consists of an upright pipe which communicates with two horizontal branches having holes near their ends opening in opposite directions. Desaguiliers affirms the pressure to be the weight of a column, which would produce a velocity of afflux equal to the difference of the velocity of the fluid and of the machine; and hence he deduces that its performance will be the greatest possible, when its retrograde velocity is one-third of the velocity acquired by falling from the surface, in which case it will raise $\frac{8}{27}$ths of the water expended to the same height, which is double of the performance of a mill acted on by the impulse of water.

But this is a very imperfect account of the operation. When the machine (constructed exactly as we have described) moves round, the water which issues descends in the vertical trunk, and then, moving along the horizontal arms, partakes of this circular motion. This excites a centrifugal force, which is exerted against the ends of the arms by the intervention of the fluid. The whole fluid is subjected to this pressure (increasing for every section across the arm in the proportion of its distance from the axis), and every particle is pressed with the accumulated centrifugal forces of all the sections that are nearer to the axis. Every section, therefore, sustains an actual pressure proportional to the square of its distance from the axis. This increases the velocity of efflux, and this increases the velocity of revolution, and this mutual co-operation would seem to terminate in an infinite velocity of both motions. But, on the other hand, this circular motion must be given anew to every particle of water as it enters the horizontal arm. This can be done only by the motion already in the arm, and at its expense. Thus, there must be a velocity which cannot be overpassed even by an unloaded machine. But it is also plain, that by making the horizontal arm very capacious, the motion of the water from the axis to

Digitized by Google

the jet may be made very slow, and much of this diminution of circular motion be prevented. *System of Mechanical Philosophy, by John Robinson*, pp. 616, 617. Centrifugal pumps, correctly speaking, are such as have water admitted at the axis of a hollow wheel, traversed by vanes, which being made to revolve rapidly expels the water at the circumference. The pipe by which the water reaches the axis of the wheel or the reservoir which feeds it, becomes under these circumstances a suction pipe, and if the reservoir into which the water is received from the periphery of the wheel be closed, and a pipe be carried from it upwards, the latter becomes a force pipe. Appold's centrifugal pump, and Gwynn's, are examples of this kind of machine in practice; they are largely employed in raising large bodies of water to a small height. Centrifugal machines were used in America in 1830. Mr. M'Carty erected one in the navy yard New York, in 1838. M. Ch. Combes describes a centrifugal machine in a paper entitled "*Sur les Roues de Réaction*" (*Comptes Rendus*, vol. vii., 2mo. Semestre, 1838, p. 306). In this paper the theory of the centrifugal ventilator is discussed, and its obvious relations to the theory of the centrifugal pump pointed out. In August 1838, M. Combes took out a *brevet d'invention* entitled "Pour un machine universelle, à force centrale, propre à déplacer les liquides et les fluides aëriformes." (*Récherches Théoriques et Expérimentales sur les Roues à Réaction ou à Tuyaux, par M. Ch. Combes*, and *Jurors' Report of Great Exhibition* 1851.) Many ventilating machines for mines are constructed on this principle. (See VENTILATING MINES; also TURBINE.) Whirling machines, which are used for drying cloth, sugar, and other things, are entirely dependent on the action of centrifugal force. These machines are called hydro-extractors. See CALICO PRINTING.

CENTUARY. *Centaurea calcitrata.* The common star thistle; a herb, the root and leaves of which are bitter. It is said to be sometimes used instead of hops.

CERASIN. The name given by Dr. John to those gums which swell but do not dissolve in water; such as gum tragacanth. It is synonymous with BASSORINE, *which see.*

CERASITE or CERASINE. Horn lead. See LEAD ORES.

CERATE, from *cera, wax.* An unguent, of rather a stiff consistence, made of oil, or lard and wax, thickened occasionally with pulverulent matters.

CEREALIN. (*Céréaline*, Fr.) A nitrogenous substance found by M. Mège Mouries in bran. See BREAD.

CERINE. A substance which forms from 70 to 80 per cent. of bees'-wax. It may be obtained by digesting wax for some time in spirit of wine at a boiling temperature, The *myricine* separates, while the *cerine* remains dissolved, and may be obtained from the decanted liquor by evaporation. Cerine is white, analogous to wax, fusible at 134° F., hardly acted upon by hot nitric acid, but is readily carbonised by hot sulphuric acid. When treated with caustic alkali ley, it is converted into margaric acid and *ceraine.*

CERIUM. A peculiar metal discovered in connection with lanthanum and didymium, *cerite, allanite, orthite*, and a few other minerals of rare occurrence, found in Sweden. Cerium, extracted from its chloride by potassium, appears as a dark red or chocolate powder, which assumes a metallic lustre by friction. It does not conduct electricity well, like other metals; it is infusible; its specific gravity is unknown. It has been applied to no use in the arts. See *Watts' Dictionary of Chemistry.*

CERUSE. A name of white lead. See WHITE LEAD.

CERUSITE. Native carbonate of lead.

CETINE. The name was given by Chevreul to spermaceti.

CEYLONITE. A ferruginous variety of spinel from Ceylon.

CEYLON MOSS. (*Plocaria candida.*) See ALGÆ.

CHABASITE. A hydrated silicate of alumina and calcium. It is found in the fissures of some trap rocks.

CHAINWORK is a peculiar style of textile fabric, to which hosiery and tambouring belong. See HOSIERY.

CHAKKARA. A coarse sugar obtained from the cocoa-nut and other plants.

CHALK. (*Craie*, Fr.; *Kreide*, Germ.) An earthy carbonate of lime, white, opaque, soft, dull, or without any appearance of polish in its fracture. Its specific gravity varies from 2·4 to 2·6. Composition: Carbonic acid 44·0, lime 56·0; but it usually contains a little silica, alumina, and oxide of iron. When purified, chalk is called *whiting* and Spanish white, in England; *Schlemmkreide*, in Germany; *blanc de Troyes*, and *blanc de Meudon*, in France. Pure chalk should dissolve readily in dilute muriatic acid, and the solution should afford no precipitate with water of ammonia. Chalk is burnt into lime in great quantities, in which state it is used as a manure, also for making mortar and whitewash. Some of the lower beds, which are argillaceous, afford a good hydraulic cement, equal in every respect to Roman cement.

Of late years, it has become the custom to manure land with unburnt chalk spread

Digitized by Google

on the surface in the proportion of about 40 loads (tons) to an acre. The effect produced by chalk applied in its crude state is similar to that resulting from the application of quicklime, but more lasting, on some lands not requiring to be renewed for several years: it also has the advantage of rendering the soil *mechanically* lighter, from the larger quantity in which it is used.

In chalk districts, it is sometimes employed as a building material.

CHALK, BLACK. A mineral, called also *drawing-slate*.

CHALK, FRENCH. *Steatite*, or soap stone; a soft magnesian mineral.

CHALK, RED. A clay coloured with the peroxide of iron, of which it contains about 17 per cent.

CHALLIS. About the year 1832 this article was introduced, certainly the neatest, best, and most elegant silk and worsted article ever manufactured. It was made on a similar principle to the Norwich crape, only thinner and softer, composed of much finer materials; and instead of a glossy surface, as in Norwich crapes, the object was to produce it without gloss, and very pliable and clothy. The best quality of challis, when finished with designs and figures (either produced in the loom or printed), was truly a splendid fabric, which commanded the attention of the higher circles, and became a favourite article of apparel at their fashionable resorts and parties. The worsted yarn for the weft of this article was spun at Bradford, from numbers 52's to 64's. The making of the challis fabric soon afterwards commenced in the north.—*James's History of Woollen Manufacture.*

CHALYBEATE is a name given in medicine to preparations of iron.

CHALCEDONY. A hard mineral of the quartz family, often cut into seals. Under it may be grouped common chalcedony, heliotrope, chrysoprase, plasma, agate, belonging to the rhombohedral system, onyx, cat's eye, sardonyx, carnelian, and sard.

CHAMELEON MINERAL. As this compound—so long known in chemistry as a mere curiosity, on account of the surprising changes of colour which it spontaneously assumes—has of late been largely employed for whitening tallow, palm oil, and decolouring other organic matters, it merits description in this dictionary. It exists in two states; one of which is called by chemists the manganate of potash, and the other the oxymanganate; denoting that the first is a compound of manganic acid with potash, and that the second is a compound of oxymanganic acid with the same base. They are both prepared in nearly the same way: the former by calcining together, at a red-heat in a covered crucible, a mixture in one part of the black peroxide of manganese with three parts of the hydrate of potash (the fused potash of the apothecary). The mass is of a green colour when cold. It is to be dissolved in cold water, and the solution allowed to settle, and become clear, but by no means filtered, for fear of the decomposition to which it is very prone. When the decanted liquid is evaporated under the exhausted receiver of an air-pump, over a surface of sulphuric acid, it affords crystals of a beautiful green colour, which should be laid on a clean porous brick to drain and dry. They may be preserved in dry air, but should be kept in a well-corked bottle. They are decomposed by water, but dissolve in weak water of potash. On diluting this, decomposition of the salt ensues, with all the chameleon changes of tint; red, blue, and violet. Sometimes a green solution of this salt becomes red on being heated, and preserves this colour even when cold, but resumes its green hue the moment it is shaken: it might, therefore, furnish the votaries of St. Januarius with an admirable means of mystifying the worshippers at his shrine. The original calcined mass, in being dissolved, always deposits a considerable quantity of a brown powder, which is a compound of the acid and peroxide of manganese combined with water. Much of the potash remains unchanged, which may be recovered.

The oxymanganate of potash is made by fusing with a strong heat a mixture of equal parts of peroxide of manganese and hydrate of potash, or one part of peroxide and two parts of nitre. The mass is to be dissolved in water, and if the solution be green, it should be reddened by the cautious addition of a few drops of nitric acid. The clarified liquor is to be evaporated to the point of crystallisation. Even the smallest crystals of this salt have such an intense red colour, that they appear black with a green metallic reflection. In the air they gradually assume a steel-grey hue without undergoing any essential change of nature. A very little of the salt reddens a large body of water. The least portion of any organic matter added to the solution of this salt reduces the oxymanganic acid to the state of peroxide, which precipitates combined with water; the liquor becoming green or colourless, according to circumstances.

A more permanent oxymanganic salt may be made as follows:—Melt chlorate of potash over a spirit lamp, and throw into it a few pieces of hydrate of potash, which immediately dissolve and form a limpid liquid. When peroxide of manganese in fine powder is gradually introduced into that melted mixture, it immediately dissolves, with the production of a rich green colour. After adding the manganese in excess, the whole is to be exposed to a gentle red heat, in order to decompose the residuary

Digitized by Google

chlorate of potash. It is now a mixture of manganate of potash, chloride of potassium, and peroxide of manganese. It forms with water a deep green coloured solution, which, when boiled, assumes a fine red colour, in consequence of its becoming an oxymanganate, and it ought to be decanted off the sediment while hot. By cooling, the oxymanganate of potash separates in crystals possessed of great lustre; but towards the end colourless crystals of chloride of potassium. See MANGANATES.

CHAMOMILE FLOWERS. The *Anthemis nobilis* of Linnæus. The chamomile grows very abundantly in Cornwall, and some other parts of England. It is cultivated at Mitcham and in Derbyshire, for the London market. The chamomile is used medicinally, and is employed by some brewers to substitute hops in bitter beer. It would be well if no more objectionable bitter was employed.

The essential oil of chamomile is remarkable for its blue colour. In a paper read before the Chymical Society by Dr. Piesse, "On the colouring matter of volatile oils," this blue body was shown in an isolated state, and was named by the author azulene.

CHAMPAGNE. See WINES.

CHARBON SULFURIQUE. This name is applied to the product obtained by treating pulverised madder, either at ordinary or at higher temperatures, with a considerable quantity of rather strong sulphuric acid. MM. Persoz and Gaultier de Claubry had shown that the true colouring principles of madder are soluble without alteration in strong sulphuric acid, and it was on this observation, turned to practical account by M. Robriquet, that the preparation of his *charbon sulfurique* was based. After the action of the acid has been continued for several hours, the mass is diluted with water, the liquid filtered, and the residue well washed and dried. *Charbon sulfurique* dyes very strongly, and produces fine colours; but, being difficult and costly to prepare on a large scale, its manufacture has been generally abandoned in this country.

CHARCOAL, WOOD. The fixed residuum of vegetables when they are exposed to ignition out of contact of air. As wood charcoal may be regarded as, especially, the representative of the practically useful charred substances, a description of it naturally precedes that of the other varieties. The earliest plan of *coaling wood*, as the manufacture of charcoal was termed, and is still called, is carried on as follows:—A piece of ground is levelled at some convenient spot in the forest, which is termed the "hearth" or "earth." In the centre of this a thick pole or bundle of brushwood is placed, around which the wood is arranged, some of the pieces being laid horizontally and others set up at an inclination; or the wood may be placed altogether at any steep angle, sloping outwards from the centre to form a flattened cone, which when complete is usually called a heap; the object, whichever way the wood is placed, is to obtain a free circulation of air under the heap, to communicate with the chimney in the centre, which is formed by then withdrawing the centre pole or bundle of brushwood. The large wood should if convenient be at the bottom of the heap, and the outside packed as close as possible; the heap is then covered with small brushwood, and afterwards with turf, or the material most impervious to air which can be conveniently obtained. A fire is lighted in the centre chimney, and by leaving openings in the outside covering at the bottom of the heap, the fire soon extends, and can be guided to any part by making temporary openings to admit the air. When the heap is sufficiently fired all the openings are closed, and lastly the chimney itself. The fire will always extend most rapidly on the side facing or towards the wind; and great care must be taken to watch and check this, by keeping the covering on that side in good order. The charcoal burner must always be careful to spread the fire as evenly as possible through the heap, and after it is coaled to stop it down carefully; he can always accelerate the process in any part of the heap if well built, by opening the outside to admit air freely: but if he finds this does not act, from any fault in setting the wood, he had better open a hole with a bar at the place required, and light a fire in the hole; this will soon communicate with the main fire in the heap. As soon as the smoke and white flame cease to escape at the vents, the whole heap must be closed from the air as carefully as possible, until the charcoal is quite cooled and is ready to draw. The fire must never burn too fast; the slower the process, if the fire is steady and regular, the better the yield of charcoal. Hard close-grained woods take a longer time to coal than soft open-grained woods, and should be placed in the heap accordingly. These technical instructions, handed down in the forests for ages as secrets from father to son amongst the "coalliers" in every country in Europe, are the results of long practical experience, and strictly accord with the true principles on which the process is based.

To carbonise wood under a movable covering, the plan of *meiler*, or heaps, is employed very much in Germany. The wood is arranged either in horizontal layers, or in nearly vertical ones, with a slight slope, so as to form conical rounded heaps of different sizes. The former are called lying *meiler*, *fig.* 437; the latter standing *meiler*, *figs.* 438 and 439. Both are distributed in much the same way.

Digitized by Google

In districts where the wood can be transported into one place by means of rivers, or mountain slides, a dry flat space must be pitched upon, screened from storms and

437 438 439

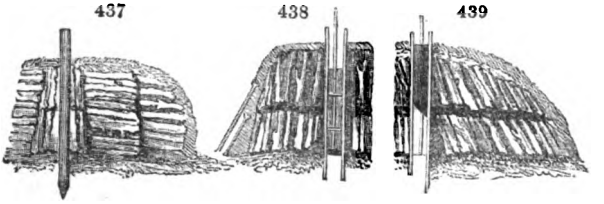

floods, which may be walled round, having a slight declivity made in the ground, towards the centre. (See *fig.* 440.) Into this space the tarry acid will partially fall, and may be conducted outwards, through a covered gutter beneath, into a covered tank. The mouth of the tank must be shut, during the coking, with an iron or stone slab, luted with clay. A square iron plate is placed over the inner orifice of the gutter to prevent it being choked with coal ashes. *Fig.* 440 represents a walled *meiler* station; *a*, the station; *b*, the gutter; *c*, the tank, which is covered with the slab *d*; *e*, a slab which serves to keep the gutter clear of coals. The cover of the heaps is formed of earth, sand, ashes, or such other matter as may be most readily found in the woods. They should be kindled in the centre. From 6 days to 4 weeks may be required for charring a heap, according to its size, hard wood requiring most time; and the slower the process, the better and greater is the product, generally speaking.

440

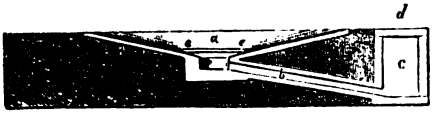

Charring of wood in mounds (*Haufe* or *liegende Werke*), *figs.* 441 and 442, differs from that in the *meiler*, because the wood in the *haufe* is successively charred, and the charcoal is raked out by little and little. The product is said to be greater in this way, and also better. Uncleft billets, 6 or 8 feet long, being laid over each other, are covered with ashes, and then carbonised. The station is sometimes horizontal, and sometimes made to slope. The length may be 24 feet, the breadth 8 feet; and the wood is laid crosswise. Piles are set perpendicularly to support a roof made of boughs and leaves covered with ashes. Pipes are occasionally laid within the upper part of the mounds, which serve to catch and carry off some of the liquid.

441

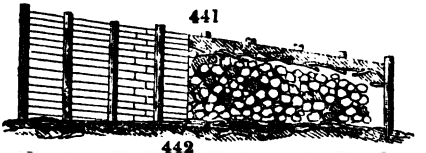

442

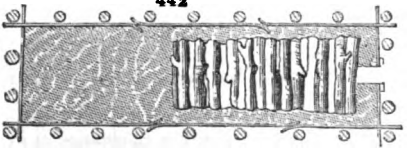

Fig. 443 is a vertical section, and *fig.* 444 a half bird's-eye view, and half cross section at the height of the pit bottom, of Chabeaussière's kiln for making wood charcoal. *a* is the oven; *b*, vertical air pipes; *c c*, horizontal flues for admitting air to the kiln; *d d*, small pits which communicate by short horizontal ones, which communicate, by short horizontal pipes *e e*, with the vertical ones; *f*, the sole of the kiln, a circle of brickwork, upon which the cover or hood *h* reposes; *i*, a pipe which leads to the cistern *k*; *l*, the pipe destined for carrying off the gaseous matter; *m m*, holes in the iron cover or lid.

443

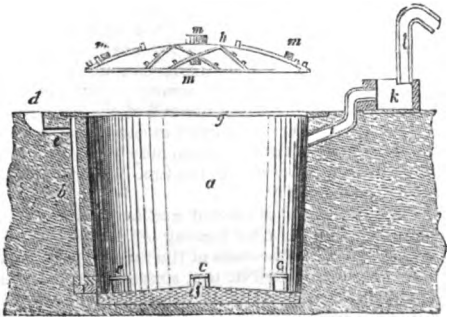

Digitized by Google

The distribution of the wood is like that in the horizontal *meilers*, or heaps; it is kindled in the central vertical canal with burning fuel, and the lid is covered with a few inches of earth. At the beginning of the operation all the draught flues are left open, but they are progressively closed, as occasion requires. In eight kilns of this kind, 500 *decasters* of oak wood are carbonised, from which 15,000 hectolitres of charcoal are obtained, equal to 64,000 pounds French, being about 25 per cent., besides tar, and 3000 velts of wood vinegar, of from 2° to 3° Baumé.

441

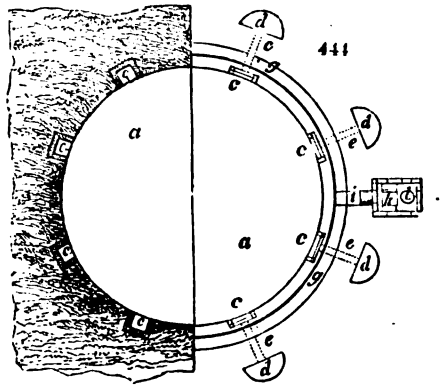

At Crouy upon the Ourcq, near Meaux, there is a well-constructed kiln for making turf-charcoal. It resembles most nearly a tar-kiln. In *fig.* 445, *a* is the cylindrical coking place, whose surrounding walls are heated by the flame which passes through the intermediate space *b*. The place itself is divided by partitions of fire tiles into three stages, through the apertures in which the flames of the fire *c c*, rise, and heat the exterior of the coking apartment. In order to confine the heat, there is in the enclosing walls of the outer kiln a cylindrical hollow space *d*, where the air is kept stagnant. Through the apertures left in the upper end at *e*, the turf is introduced; they are then shut with an iron plate *f*, which is covered with ashes or sand. The fire-place opens above this aperture, and its outlet is provided with a movable iron cover *g*, in which there is a small hole for the issue of the gases. The sole of the kiln consists of a cast-iron slab *h*, which may be raised by means of a hook *i* upon it. This is drawn back after the carbonisation is completed, whereby the charcoal falls from the coking space into a subjacent vault. The volatile products are carried off by the pipe *k*, and led into the condensing cistern; the gases escaping to the fire-place, where they are burned. The iron slab is protected from the corrosion of the acid vapours by a layer of coal ashes.

445

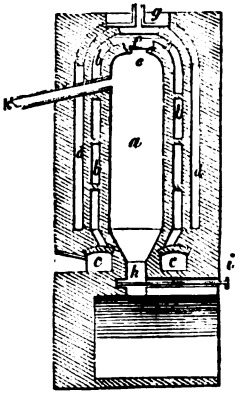

Charcoal obtained by the action of a rapid fire in close vessels is not so solid and so good a fuel as that which is made in the ancient way by the slow calcination of pyramidal piles covered with earth. One of the most economical ovens for making wood charcoal is that invented by M. Foucauld, which he calls a *shroud*, or *abri*. To construct one of these, 30 feet in diameter at the base, 10 feet at its summit, and from 8 to 9 feet high, he forms, with wood 2 inches square, a frame 12 feet long, 3 feet broad at one end, and 1 foot at the other. The figures 446–447 will explain the construction. The uprights, A B and C D, of this frame are furnished with three wooden handles *a a a*, and *a' a' a'*, by means of which they can be joined together, by passing through two contiguous handles a wooden fork, the frame being previously provided with props, as shown in *fig.* 446, and covered with loam mixed with grass. A flat cover of 10 feet diameter, made of planks well joined, and secured by 4 cross bars, is mounted with 2 trap doors, M N, *fig.* 449, for giving egress to the smoke at the commencement of the operation; a triangular hole P, cut out in the cover, receives the end of the conduit Q R S, (*figs.* 448 and 449) of wood formed of three deals destined to convey the gases and condensed liquids into the casks F G H. Lastly, a door T, which may be opened and shut at pleasure, permits the operator to inspect the state of the fire. The charcoal calcined by this *abri* has been found of superior quality.

When it is wished to change the place where the *abri* is erected, and to transport it to a store of new-felled timber, the frame is taken down, after beating off the clay which covers it; the joints are then cut by a saw, as well as the ends of the forks which fixed the frames to one another. This process is economical in use, simple and cheap in construction; since all the pieces of the apparatus are easily moved about, and may be

Digitized by Google

readily mounted in the forests. For obtaining a compact charcoal, for the use of artisans, this mixed process of Foucauld is said to be preferable to either the close iron cylinder or the pile.

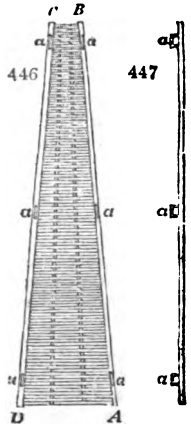

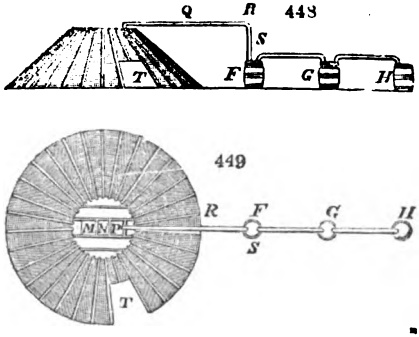

For making gunpowder-charcoal the lighter woods, such as the willow, dogwood, and alder answer best; and in their carbonisation care should be taken to let the vapours freely escape, especially towards the end of the operation, for when they are re-absorbed, they greatly impair the combustibility of the charcoal.

By the common process of the forests, about 18 per cent. of the weight of the wood is obtained; by the process of Foucauld about 24 per cent. is obtained, with 20 of crude pyroligneous acid of 10° Baumé. By the process described under ACETIC ACID, 27 of charcoal, 18 of acid at 6°, are procured from 100 parts of wood, besides the tar. These quantities were the results of careful experimenting, and are greater than can be reckoned upon in ordinary hands.

Charcoal for chemical purposes may be extemporaneously prepared by calcining pieces of wood covered with sand in a crucible, till no more volatile matter exhales.

The charcoal of some woods contains silica, and is therefore useful for polishing metals. Being a bad conductor of heat, charcoal is employed sometimes in powder to encase small furnaces and steam-pipes. It is not affected by water; and hence, the extremities of stakes driven into moist ground are not liable to decomposition. In like manner casks when charred inside preserve water much better than common casks, because they furnish no soluble matter for fermentation or for food to animalcules.

Lowitz discovered that wood charcoal removes offensive smells from animal and vegetable substances, and counteracts their putrefaction. He found the odour of succinic and benzoic acids, of bugs, of empyreumatic oils, of infusions of valerian, essence of wormwood, spirits distilled from bad grain, and sulphureous substances were all absorbable by freshly calcined charcoal properly applied. A very ingenious filter has been constructed for purifying water, by passing it through strata of charcoal of different fineness.

When charcoal is burned, one-third of the heat is discharged by radiation, and two-thirds by conduction.

The following Table of the quantity of charcoal yielded by different woods was published by Mr. Mushet, as the result of experiments carefully made upon the small scale. He says, the woods before being charred were thoroughly dried, and pieces of each kind were selected as nearly alike in every respect as possible. One hundred parts of each sort were taken, and they produced as under:—

Lignum Vitæ afforded	26·0	of charcoal of a greyish colour, resembling coke.
Mahogany	25·4	tinged with brown, spongy and porous.
Laburnum	24·5	velvet black, compact, very hard.
Chestnut	23·2	glossy black, compact, firm.
Oak	22·6	black, close, very firm.
Walnut	20·6	dull black, close, firm.
Holly	19·9	dull black, loose and bulky.
Beech	19·9	dull black, spongy, firm.
Sycamore	19·7	fine black, bulky, moderately firm.
Elm	19·5	fine black, moderately firm.

Digitized by Google

Norway Pine	19·2	shining black, bulky, very soft.
Sallow	18·4	velvet black, bulky, loose and soft.
Ash	17·9	shining black, spongy, firm.
Birch	17·4	velvet black, bulky, firm.
Scottish Pine	16·4	tinged with brown, moderately firm.

Messrs. Allen and Pepys, from 100 parts of the following woods, obtained the quantities of charcoal as under:—

Beech	15·00	Oak	17·40
Mahogany	15·75	Fir	18·17
Lignum Vitæ	17·25	Box	20·25

It is observable that the quantities obtained by Messrs. Allen and Pepys are in general less than those given by Mr. Mushet, which may be owing to Mr. Mushet not having applied sufficient heat, or operated long enough, to dissipate all the aqueous matter or the gaseous products.

To those persons who buy charcoal by weight, it is important to purchase it as soon after it is made as possible, as it quickly absorbs a considerable portion of water from the atmosphere. Different woods, however, differ in this respect. Messrs. Allen and Pepys found that by a week's exposure to the air, the charcoal of

Lignum Vitæ gained	9·6	per cent.
Fir	13·0	ditto.
Box	14·0	ditto.
Beech	16·3	ditto.
Oak	16·5	ditto.
Mahogany	18·0	ditto.

The following is a tabular view of the volumes of the different gases which were absorbed in the course of 24 hours, by one volume of charcoal, in the experiments of M. Théodore de Saussure, which were conducted in a way likely to produce correct results. Each portion of charcoal was heated afresh to a red heat, and allowed to cool under mercury. When taken from the mercury, it was instantly plunged into the vessel of gas.

Ammoniacal gas	90	Bicarburetted hydrogen	35·00
Muriatic acid gas	85	Carbonic oxide	9·42
Sulphurous acid	65	Oxygen gas	9·25
Sulphuretted hydrogen	55	Nitrogen	7·50
Nitrous oxide	40	Carburetted hydrogen	5·00
Carbonic acid gas	35	Hydrogen gas	1·75

Neumann, who made many experiments on charcoal, informs us that for the reduction of the metallic oxides, the charcoal of the heavier woods, as that of the oak and the beech, is preferable, and that, for common fuel, such charcoal gives the greatest heat, and requires the most plentiful supply of air to keep it burning; while those of the lighter woods preserve a glowing heat with a much less draught of air; and that for purposes where it is desirable to have a steady and a still fire, charcoal should be employed which has been made from wood previously divested of its bark, since it is the cortical part which crackles and flies off in sparks during combustion, while the coal or the wood itself seldom does.

For making crayons of charcoal, the willow is the best wood that can be employed, as the softness is uniform in all its parts. The durability of charcoal may be seen in several of our old churchyards, where the letters made with lamp-black are still perfect, though the white lead with which the body of the stones was painted is entirely destroyed.

This property of carbon is shown, however, in a more striking manner by the writings that were found in the ruins of Herculaneum, which have retained their original blackness for two thousand years. The ancients wrote with ink made from ground charcoal.

If it be required to purify any carbonaceous matter, to render it fitter for delicate pigments, this may be done by first calcining it in a close vessel, and then lixiviating it in water slightly acidulated by nitric acid.

The incorruptibility of charcoal was well known to the ancients, and they availed themselves of this property upon all important occasions.

About sixty years ago a quantity of oak stakes were found in the bed of the Thames, in the very spot where Tacitus says that the Britons fixed a vast number of such stakes, to prevent the passage of Julius Cæsar and his army. These stakes were charred to a considerable depth, had retained their form completely, and were firm at the heart.

Digitized by Google

Most of the houses in Venice stand upon piles of wood, which have all been previously charred for their preservation. In this country, estates were formerly marked out by charred stakes driven to a considerable depth into the ground. These are occasionally found, and usually the charred portions are quite perfect, although every other part has decayed.

CHARCOAL, ANIMAL. See BONE BLACK. Animal charcoal especially, and other charcoal occasionally, has been much employed in the construction of filters for domestic use. The advantage of charcoal is a purifying agent—through which to pass water—has been long established. But it cannot be too generally known that the charcoal, in a few weeks loses the property upon which its value depends. When first used, it separates not only the matters mechanically suspended in water, but much of the organic matter and salts held in solution. This property appears to be entirely lost in about two months, after which time it is necessary either to renew or to restore the charcoal. See FILTER.

CHARCOAL, LIGNITE. Much of the lignite or brown coals of the Continent has been converted into charcoal, with a view to its use in metallurgical works. Mayer says that very firm charcoal is obtained by charring freshly-dug lignite without previously exposing it to the air. The complaint, however, amongst metallurgists is, that it is not generally sufficiently coherent for the furnace. The following are a few of the results of practical experiments:—

Lignite from	Cologne,	produced per cent. of	charcoal	36·1
"	Iceland	"	"	57·5
"	Friesdorf	"	"	48·2
"	Stösschen	"	"	40·6
"	Paredel	"	"	42·0
"	Oberpfalz	"	"	46·0

CHARCOAL, PEAT. Numerous attempts have been made from time to time to utilise the peat of our bogs, and especially to bring peat charcoal into use for smelting iron, and other metallurgical processes. As far back as 1712, we are told by Carlowitz, that peat was charred in piles or stacks as wood is. Vogel informs us that, in 1735, peat charcoal was made in the Hartz. Numerous experiments have been made on the Continent to produce a charcoal from peat, which should answer the requirements of metallurgy. None of these appear to have been entirely successful. Within the last few years experiments have been made in Ireland to smelt the hæmatite iron ore of Cumberland with peat charcoal. The exact results of the experiments have not been made known, but, certain it is, they did not promise to be commercially successful, and the idea has long been abandoned. We learn from the report of Sir Robert Kane, that the relative quantities of charcoal and other substances produced from a hundred parts of peat were found to be:—

	Average.	Maximum.	Minimum.
Charcoal	29·222	39·132	18·973
Tarry matter	2·787	4·417	1·462
Watery products	31·378	38·127	21·819
Gases	36·616	57·746	25·018

From the same report we glean the following tables, giving the determinations of carbon, &c., in different peats:—

	REGNAULT. (*Annal der Pharm.*)			MULDER. (*Berz. Jahrb*)		
	Vulcaire near Abbeville.	Long near Abbeville.	Champ de Fer, near Framont.	Friesland compact turf.	Friesland surface turf.	Holland.
Carbon	60·40	60·89	61·05	59·42	60·41	59·27
Hydrogen	5·90	6·21	6·45	5·87	5·57	5·41
Oxygen	33·64	32·90	32·50	34·71	34·02	35·32
Ash in 100 parts	5·58	4·61	5·33	3·80	0·91	14·25

The following results were obtained by Sir Robert Kane, from peats from the Irish bogs; and published in the Proceedings of the Royal Irish Academy.

	Kilbeggan in Westmeath.	Kilbaha in Clare.	Cappoge in Kildare.
Carbon	61·04	51·13	51·05
Hydrogen	6·67	6·33	6·85
Oxygen	30·45	34·48	39·55
Ash	1·83	8 06	2·25

Digitized by Google

The determinations of charcoal and volatile matters found in peat in the following table, are: 1. from Rue, in department of Somme; and 2. from Abbeville, by Berthier; 3. from Vaucluse, by Diday; 4. from Sécheral, by Sauvage; and 5. from Kildare; 6. from Kilbeggan; 7. from Kilbaha; and 8. Cappoze, by Sir Robert Kane.

	1.	2.	3.	4.	5.	6.	7.	8.
Charcoal - -	21·0	23·0	17·3	22·0	23·82	22·67	19·14	23·65
Volatile matter -	72·0	72·2	65·3	39·2	73·63	75 50	72·80	70·10
Ash - -	7·0	4·8	17·4	8·3	2·55	1·83	8·06	6·24

Peat is usually charred by methods similar to those employed for the carbonization of wood. Kilns, variously constructed, have been used, but the success attending the production of peat-charcoal by them, has not been sufficiently great to induce us to occupy space with any description of them.

In 1849, Mr. Vignoles, C.E., patented a process for charring peat by steam, superheated to the melting point of tin or lead. Pulped peat is thrown in mass into a cylindrical drum-shaped vessel, divided, if necessary, into compartments, which is caused to revolve with great rapidity upon an axis—the velocity requisite being such as shall drive off the water or other fluid from the solid parts of the peat or turf by centrifugal force. When all the water is removed from the peat by this process, and it is in a coherent mass, it is removed and moulded into blocks. These blocks are put into large cylindrical iron vessels, into which steam, at from 45 lbs. to 60 lbs. pressure per square inch, is admitted, after a process of superheating, by traversing iron tubes heated to bright redness. This process, although strongly recommended, has never been practically adopted.

Peat charcoal, as far as heating power is concerned, ranks among the best kinds of fuel, but it produces so much ash as to make its use very objectionable. 100 pounds of dry peat, say Messrs. Ronalds and Dr. Richardson, leave 21 lbs. of ash, and produce 47 lbs. of charcoal, therefore those 47 lbs. of peat charcoal will contain 21 lbs. or 45 per cent. of ash.

Rogers adopted in Ireland a system of drying peat and carbonizing it, which was for some time carried forward with much promise of success. Green produced a draught of hot air through a drying house, by means of chimneys and fires. He then distilled the dry peat in wrought iron cylinders, similar to those employed in making illuminating gas, the gases obtained being used as part of the fuel below. Notwithstanding all the attempts which have been made to utilise peat charcoal, there is no one process now carried out (1866) on a large scale.

CHARCOAL, PLATINISED. This preparation, which appears destined to become exceedingly valuable, was introduced by Dr. Stenhouse, who thus describes the mode of preparation and some of its uses.

"The lighter kinds of wood charcoal, owing to the nine volumes of oxygen gas contained in their pores, possess a considerable power of oxidising the greater number of easily alterable gases and vapours. The absorbent power of charcoal, however, is comparatively much greater than its capacity for inducing chemical combination. In this respect charcoal presents a remarkable contrast to spongy platinum, which, though inferior as an absorbent for some gaseous substances,—such for instance, as ammonia, of which spongy platinum absorbs only 30 volumes, while charcoal absorbs ninety—is, nevertheless, immensely more effective, both as an oxidiser, and as a promoter of chemical combination generally. As it is desirable for some purposes, while retaining the absorbent power of charcoal unimpaired, to increase its oxidating influences, it struck me that this important object might be easily effected by combining the charcoal with minutely divided platinum. In this way, a combination is produced, to which I have given the name of platinised charcoal, which possesses the good properties of both of its constituents. In order to platinise charcoal, nothing more is necessary than to boil the charcoal, either in coarse powder or in large pieces, in a solution of bichloride of platinum, and when the charcoal has become thoroughly impregnated with the platinum, which seldom requires more than ten minutes, or a quarter of an hour, to heat it to redness in a close vessel—a capacious platinum crucible being very well adapted for this purpose. When 150 grains of charcoal were impregnated with nine grains of platinum, by the process just described, the charcoal was found to have undergone no change in its external appearance, though its properties had been very essentially altered. When a few grains of this platinised charcoal were passed up into a mixture of dry oxygen and hydrogen in the proportions to form water, over mercury, the two gases combined in the course of a few minutes, precisely in the same way as when a clay ball of spongy platinum is employed. When, however, a fragment of charcoal containing a considerably larger proportion of platinum was passed up into a similar gaseous mixture, the gases instantly combined with explosive violence, just as if platinum-black had been used. If pieces of cold platinised charcoal are held in a jet

Digitized by Google

of hydrogen, they speedily become incandescent, and inflame the gas. Platinised charcoal, when slightly warmed, likewise rapidly becomes incandescent in a current of coal gas, but the jet of gas is not inflamed, owing to the very high temperature, a white heat, which is required for this purpose.

"In the vapour of alcohol or wood spirit, platinised charcoal becomes red hot, and continues so till the supply of vapour is exhausted. In the course of a few hours, spirits of wine, in contact with platinised charcoal and air, is converted into vinegar. I find that two per cent. of platinum is sufficient to platinise charcoal for most purposes. Charcoal containing this small amount of platinum, causes a mixture of oxygen and hydrogen to combine perfectly in about a quarter of an hour, and this is the strength of platinised charcoal that seems best adapted for charcoal disinfectant respirators. Charcoal containing one per cent. of platinum, causes a mixture of oxygen and hydrogen, to combine in about two hours; and charcoal containing the extremely minute quantity of $\frac{1}{4}$ per cent. platinum, produces the same effect in from 6 to 8 hours. Platinised charcoal seems likely to admit of various useful applications; one of the most obvious of these is its excellent adaptability to air-filters and respirators for disinfectant purposes. It is plain that no easily alterable organic vapours, such as effluvia or miasmata, can remain in contact, even for a few minutes, with platinised charcoal without being destroyed, their carbon being converted into carbonic acid, and their hydrogen into water.

"Platinised charcoal also seems likely to prove a highly useful application to malignant ulcers and similar sores, on which I confidently expect, from its powerful oxidating properties, that it will act as a mild, but effective, caustic. Perhaps, however, as an application to sores, platinised asbestos, either alone, or in combination with platinised charcoal, might be found more manageable. In those diseases also where the internal use of charcoal has been found beneficial, I should think that platinised charcoal may be advantageously substituted. In Bunsen's carbon battery also, the employment of platinised charcoal may, I think, be advantageously tried.

"It is clear that the amount of platinum in the charcoal may be varied almost at pleasure, according to the strength of the platinum solution employed in its preparation, and the purposes to which the charcoal is intended to be applied. Almost any form, and even very considerable dimensions, may be given to the platinised charcoal —circumstances which greatly extend the range of its applications."

CHARCOALS. The name by which the best tin plates are known, these are always made by charcoal fires.

CHASCHISCH. Hadschy is not the correct term for this narcotic drug, for Hadschy means a *pilgrim*; the true name is, according to pronunciation, *Chaschisch*, the Arab word for hemp (*Cannabis sativa*). By this name, all intoxicating drugs whose chief constituent is this herb are well known over the whole of the East. The mode of preparing chaschisch is the following :—

The tops and all the tender parts of the hemp plant are collected after the period of inflorescence, dried and kept for use. It must be premised that the hemp plant is in the East distinguished by its narcotic properties, although botanists are unable to detect any difference between this and the European species. The dried hemp or chaschisch, is used—

1st. Boiled in fat, butter, or oil, with a little water; the filtered product is employed in all kinds of pastry.

2nd. Powdered for smoking: 5 or 10 grs. of the powder are smoked from a common pipe (*tsubuk*) with ordinary tobacco (*tütüm*), or from a water pipe (*nargiele*) with another kind of tobacco (*tombeki*). The tombeki is probably the leaf of a species of lobelia; it is smoked in a nargiele, and is uncommonly narcotic; so much so, that it is ordinarily steeped in water for a few hours before it is used, to weaken it, and the pipe is charged with it whilst it is yet wet.

3rd. Formed with tragacanth mucilage into pastiles, which are placed upon a pipe and smoked in similar doses. These two last preparations are termed *esrar* (*esrar* is the Arab word for "*secret*"); they are the most active of all the preparations of chaschisch, and the first pipe will cause cerebral congestion in beginners.

4th. Made into an electuary with dates or figs and honey. This preparation is of a dark brown, almost black, colour, and tastes of dates and hemp; it is less active than the esrar.

5th. Lastly, another electuary is prepared of the same ingredients with the addition of spices, clove, cinnamon, pepper, amber, and musk. This preparation is used as an aphrodisiac.

Chaschisch is said not to produce stupor, but the most pleasant species of intoxication. The person under its influence feels with perfect consciousness in the best of all humours; all impressions from without produce the most grateful sensations; pleasant illusions pass before his eyes, and he feels comfortably happy; he thinks

Digitized by Google

himself the happiest man on earth, and the world appears to him Paradise. From this imaginative state he passes into the every day state, with a perfect recollection of all sensations, and of everything he has done and of every word he has spoken. The effects of a continued use of the narcotic are emaciation and nervous debility.

CHECK. A cloth in which coloured lines or stripes cross each other rectangularly. Blackburn in England, and Kirkaldy in Scotland, are the principal centres of the check manufacture. See WEAVING.

CHEESE. Fr. *Fromage*. The curd of milk which has been allowed to undergo a peculiar change, by which it acquires the well-known flavour. The most celebrated English cheeses are manufactured in Cheshire, Gloucestershire, and Somersetshire. The milk of animals contains three principles, which are, by very slight changes, separated from each other. By a short repose, an oily portion rises to the surface of the milk—this consists of the cream globules, which are readily converted into butter. If any acid be added to the milk, a curd separates; this is the caseous matter, or casein, which being pressed in moulds, becomes cheese; the third portion being the serum or whey. The cheesy matter which exists in milk in a soluble state, is usually separated by means of rennet (*see* RENNET)—that is, it is coagulated by it, or rendered insoluble. The action of rennet upon milk is still very imperfectly understood. In order to investigate the subject, Berzelius washed and dried the stomach of a calf, and yet he found that one part of this mixed with nearly 2,000 parts of skimmed milk, and heated to 120° F., so completely coagulated the caseous matter that no trace of it remained in solution. All acids curdle milk—muriatic (hydrochloric) acid is said to be used for this purpose in Holland. Some vegetables readily coagulate milk, amongst others the juice of the fig tree, the flowers of the *Galium verum*, the yellow lady's bed straw, or cheese rennet. The odour of the flowers of this plant is sweet, the stalks and flowers have been used in Cheshire to curdle milk, and they are said to give a peculiar flavour to that kind of cheese.

There are different kinds of cheeses according to the manner of preparing them.

Soft cheeses—as cream cheese, and Bath and Yorkshire cheese, which will not keep long, and are therefore sold as soon as made.

Hard cheeses—as Cheshire, Gloucester, Cheddar, Parmesan and Dutch cheese.

Intermediate—we may regard the Gruyère and Stilton.

The following is the process used for cheese-making in general. The milk is first strained, then put into a large cauldron, which hangs from an iron crane over a wood fire, and heated to nearly blood heat. It is then removed from the fire, the prepared rennet is added to it, and stirred till it is well mixed with the warm milk. The cauldron is then covered with a cloth, and left for about half an hour or an hour, till the coagulum is formed. This done, the curd is cut horizontally, with a flat wooden skimming ladle, made for that purpose, into thin slices, which are poured against the side of the cauldron, so that every portion of the curd thus rises to the surface, and is thinly sliced. The cauldron is then replaced over the fire, and the whole is well stirred with a long staff with a knob made of hard wood at the end, and small sticks placed crosswise through holes bored in it; this breaks the curd into very small pieces; the stirring is continued until the heat is raised to 135°, when the cauldron is again taken off the fire. It is then stirred for nearly an hour more with the staff, and when this is done, the curd is found in small pieces about the size of a pea, which feel elastic and rather tough. The curd is then collected in the bottom of the cauldron, and the whey floats at the top: a cloth is put under the curd, and lifted by the four corners on to an instrument, something like a small ladder, which is placed across the top of the cauldron. The whey runs out through the cloth, then the curd in the cloth is put into a hoop, made of a thin piece of wood; and a board about two inches thick is placed over it; it is then put into the press. After remaining in the press about an hour, the curd is examined, and the edges which have pressed over the ring are pared off and put in the centre of the cheese. The cheese is then taken out of the hoop and turned, and a fresh cloth substituted. This is done two or three times during the day. A little finely powdered salt is then rubbed on both sides of the cheese, and it is left in the press until the next morning, after that it is taken out and put on a shelf, where it is allowed to remain for six or eight weeks, having a little salt rubbed into it every day till it will not take any more. The weather has a great influence on the dairy. In Cheshire, cheeses are made in great perfection. In making them they are particularly careful to extract every particle of whey; to do this they press the curd very tightly in boxes with holes bored in them; they then put wooden skewers through these holes into the cheese, so that no whey can possibly remain in the curd. This process gives Cheshire cheeses the solid appearance which they possess. If there are any holes in them they are considered imperfect. In these cheeses the salt is mixed with the curd, instead of being rubbed on the outside of the cheese. This prevents fermentation,

Digitized by Google

or the formation of any elastic matter. Gloucester and Somersetshire cheeses are made in just the same way as the Cheshire, except that the curd is not quite so much broken, or the skewers put through the cheese, and some portion of the cream is generally taken to make butter. Warm water is poured over the curd to wash from it any whey that may still be remaining in it, or to dissolve any of the oily part, or butter, that may have separated, before the milk had been coagulated.

Stilton cheeses require great care in making them. They are made by adding the preceding evening's cream to the morning's milk. The cream and milk must be well mixed together, and after the milk is coagulated, the curds must be strained through a sieve only lightly pressed, then put into a shape; when it is firm enough it is taken out, bound round with a cloth to keep it from breaking, and set on a shelf. It is sometimes powdered with flour and plunged into hot water to harden the outside. Stilton cheese is generally preferred in a mouldy state, and to hasten this, pieces of another mouldy cheese are often inserted in the new Stilton, or wine or ale poured over it. But if the cheese is rich, it does not require this, but the inside will get soft like butter, without getting mouldy.

Gruyère and *Parmesan* cheeses are made by the process first described, the only difference between them being, that a greater degree of heat is used in making Parmesan, than in making Gruyère, and this renders the Parmesan cheese dry and grained, while the Gruyère is pressed and compact. A little saffron is also used to give Parmesan colour and flavour, but nothing is used for Gruyère.

Dutch cheeses are made in a very similar way to Gloucester cheeses, but instead of using rennet to curdle the milk, the Dutch use muriatic acid, or spirits of salt. They are very careful to prevent fermentation in this cheese, and in order to effect this, the curd, after being well broken and pressed, is soaked in salt and water: salt is also rubbed on the outside of the cheese, and it thus acquires the quality of keeping well, even in warm climates. These cheeses are generally known in Holland by the name of Edam cheeses, from the name of the place where they are made.

Another cheese much used in Holland is one made from skim milk; not having much flavour of its own, cummin seeds are mixed with the curd to supply this defect.

The *Roquefort cheese* is made in France from goats' or sheep's milk. The evening's and morning's milk is mixed, and rennet is used in the ordinary way to coagulate it. The curd is then subjected to great pressure, and when the whey is all extracted, the cheeses are laid on shelves, side by side, and frequently wiped carefully to dry them without heat. They generally wrap the cheeses in coarse cloths, to prevent them from cracking in drying. When they are quite dried, they are taken to caves dug in the rocks, where the air is always cool, and placed on shelves. They are then salted, and after about two or three days, they are rubbed with a coarse cloth, and then scraped with a knife. They are then left for fifteen days, during which time they get hard, and begin to get mouldy on the outside: the mouldiness is removed by a knife, and this process is repeated every fifteen days for two months, and sometimes oftener. During this time the crust formed on the cheeses becomes successively white, greenish and reddish; when it is this latter colour, they are fit for use.

The *Brie cheese* is another, the quality of which is nearly as good as the last, but it is only used in the places where it is manufactured, because it will not keep. It is very simply made; the milk curdled in the usual manner is put to strain on a wicker frame. When all the whey has been extracted, the cheese is salted and put in a very cool place; the salting is repeated every two days: when salted sufficiently it is removed to a cave or placed on a bed of hay, until it softens. This cheese should be eaten when it is about the consistency of cream; it is then delicious, but if left longer, it becomes putrid.

The *Neufchâtel cheeses* are merely cream thickened by heat, and then compressed in a small mould. They are esteemed a great delicacy.

There is a small cheese much relished in Germany, made from skimmed milk. The milk is curdled by being placed near the fire; the curds are then put into a linen bag, and all the whey pressed out of them. When this has become solid, the curd is again broken in a tub, and allowed to remain in this state for several days. Putrid fermentation then begins to take place; when in this state it is taken and rolled into little balls with the hand, and flavoured with carraway seed. After a few days the inside of the ball becomes soft, and it is then esteemed a great dainty by many. Sometimes they are placed in the smoke of a chimney over a wood fire; the smoke hardens the outside, and when they are eaten, it is taken off like the rind of an apple.

The *Schabzieger*, a Swiss cheese, is made in much the same manner; the curd is worked into a paste with a large quantity of a herb, called in the country dialect *zieger kraut*, finely powdered. It is then pressed into a mould, and becomes very solid, and capable of being kept a long time. When eaten it is scraped and mixed with butter, and spread on bread. It possesses a very peculiar taste.

Digitized by Google

The Jura cheese is very much like the Gruyère, and is often sold for it.

There is a kind of cheese or hard curd made in Switzerland with the whey that is left after making other cheeses. The whey is heated over the fire until a thick scum arises; it is then put in a square box, all the whey runs off, and the curd, which is called *serré*, remains; this is dried, and although nearly flavourless, is much eaten by the people on the mountains, who use it instead of bread. They cut it in slices, and spread butter on it, and it forms the principal food of some of the herdsmen.

If a cheese is hard and dry it is much improved by washing several times in soft water, and then laying it in a cloth moistened with wine or vinegar. This method is often practised in Switzerland, where cheeses are often kept for many years.

In England cheeses are frequently coloured: the substance most generally used for colouring is arnotto. Sometimes the juice of the orange or carrot, and the flower of the marigold, are used for this purpose. Foreign cheeses are seldom coloured.

Composition of Cheese.

	Water.	Ash of the substance.		Nitrogen.			Fat.	
		Normal.	Dry.	Normal.	Dry.	Free from ash.	Normal.	Dry.
	Per Ct.	Per Ct.	Per Ct.	Per Ct.	Per Ct.	Per Ct.	Per Ct.	Per Ct.
Cheese from Chester	30·39	4·78	6·88	5·56	8·00	8·59	25·48	36·61
„ „ Parmesan	30·31	7·09	10·18	5·48	7·87	8·76	21·68	31·12
„ „ Neufchâtel	61·87	4·25	11·17	2·28	5·99	6·07	18·74	49·15
„ „ Brie	53·99	5·63	12·08	2·39	5·14	5·85	24·83	53·29
„ „ Holland	41·41	6·21	10·61	4·10	7·01	7·84	25·06	42·78
„ „ Gruyère	32·05	4·79	7·05	5·40	7·96	8·56	28·40	41·81

Payen Journal Pharma.

Cheese of certain dairies and districts is apt to undergo a remarkable decomposition, whereby valerianic acid is formed. Messrs. Iljenko and Laskowsi distilled along with water a turbid ammoniacal liquor, which being redistilled along with some sulphuric acid, and the product neutralised by barytes, the resulting saline compound proved to be the valerianate of that base, mixed with compounds of butyric acid, caproic acid, caprylic acid, and capric acid; the cheese was from Limbourg. Valerianic acid was found by M. Balard in the cheese of Roquefort.

CHEMICAL FORMULÆ. The term formula, in ordinary chemical language, is always understood to mean the collection of symbols indicating a compound substance. Thus if we allude to the letter or letters indicating an element, we say its symbol; but if we are speaking of a compound, we say its formula. It appears that some short notice of the principles upon which the construction of chemical formulæ depends is necessary, to enable those who are not familiar with chemical language to understand the few formulæ employed in these volumes. For a complete account of the philosophy involved in the construction, consult Watts' "Dictionary of Chemistry." The symbols of all the elements will be found under the head "EQUIVALENTS, CHEMICAL." In constructing formulæ there are several rules to be observed, the neglect of which will lead to misapprehension of the meaning intended to be conveyed. Substances in the most intimate union are expressed by placing the symbols in juxtaposition. Thus oxide of lead is represented by PbO, dry sulphuric acid by SO^3, acetic acid by $C^4H^3O^4$. But where a compound is to be expressed which is itself formed by the union of two compounds of the class first mentioned, such as an acid and a base, a comma is placed between them thus: Sulphate of lead is PbO,SO^3, nitrate of copper $CuO.NO^5$. The number of atoms, when more than one enters into a compound, is expressed by writing the number on the upper part of the right hand of the element. But if only one atom is to be expressed, the mere symbol is written. Thus oxide of copper is CuO, but the sub-oxide is Cu^2O. If it be intended to multiply a formula not containing a comma or other sign, such as SO^3; $C^4H^3O^4$, &c., the number is to be written on the left hand of the formula, and is to be made larger than would be the case if it merely multiplied the atoms of an element. Thus two atoms of oxide of lead are written 2PbO; three atoms of acetic acid, $3C^4H^3O^4$. But it is to be remembered that a number placed on the left hand of a symbol or formula only multiplies as far as the first comma or sign, so that if we wish to multiply a formula containing a comma or other sign, the formula must be placed between parentheses. Thus two atoms of sulphate of lead are written $2(PbO.SO^3)$. If it be intended to express the fact that one substance is to be added to another, with a view to the production of a given compound or reaction, the substances to be added together are connected by a plus sign. For example, suppose it be necessary to express the fact

Digitized by Google

that one equivalent of oxide of lead added to one equivalent of sulphuric acid produces sulphate of lead, we write, $PbO + SO^3$ forms sulphate of lead. But it is more usual and brief to put down the terms connected by the plus sign followed by the sign of equality, and then the formula of the resulting compound, thus:—$PbO + SO^3 = PbO,SO^3$. A collection of symbols expressing the nature of a reaction or decomposition, the two terms being united by the symbol of equality, is called an equation. Equations are of the highest value to the chemist, as enabling him to express in the simplest possible manner the most complicated reactions. Moreover, these equations enable us to see at a glance the true nature of a decomposition. To take a simple case, namely, that of the decomposition of terchloride of antimony by carbonate of ammonia, we have

$$SbCl^3 + 3(NH^4O,CO^2) = SbO^3 + 3NH^4Cl + 3CO^2.$$

Or, in words, terchloride of antimony plus three equivalents of carbonate of ammonia, yields one equivalent of teroxide of antimony, three equivalents of chloride of ammonium, and three equivalents of carbonic acid.

The above illustrations will suffice to show the principles upon which formulæ and equations expressive of chemical decompositions are constructed. In writing equations showing the metamorphoses of substances with which it may be supposed the reader of them may not be very fully acquainted, it is proper to place beneath them the names of the substances in full; thus: in writing the change supposed to be experienced by amygdaline under the influence of a ferment which does not itself contribute any substance to the reaction, we might say:—

$$\underbrace{C^{40}H^{27}NO^{22}}_{\text{Amygdaline.}} + 4HO = \underbrace{C^{14}H^6O^2}_{\text{Bitter almond oil.}} + \underbrace{C^2NH}_{\text{Prussic acid.}} + \underbrace{2C^{12}H^{12}O^{12}}_{\text{Grape sugar.}}$$

In writing the formulæ of substitution compounds, it is convenient to place the replaced and replacing substances in a vertical line, so as at a glance to indicate the substitution which has taken place. As an illustration we shall place side by side the chemical type ammonia and some bodies derived from it by substitution.

$$\underbrace{N\left\{\begin{matrix}H\\H\\H\end{matrix}\right.}_{\text{Ammonia.}} \quad \underbrace{N\left\{\begin{matrix}C^2H^3\\H\\H\end{matrix}\right.}_{\text{Methylamine.}} \quad \underbrace{N\left\{\begin{matrix}C^2H^3\\C^2H^3\\H\end{matrix}\right.}_{\text{Bimethylamine.}} \quad \underbrace{N\left\{\begin{matrix}C^2H^3\\C^2H^3\\C^2H^3\end{matrix}\right.}_{\text{Trimethylamine.}} \quad \underbrace{N\left\{\begin{matrix}C^{12}H^5\\H\\H\end{matrix}\right.}_{\text{Aniline.}} \quad \underbrace{N\left\{\begin{matrix}pt\\pt\\H\end{matrix}\right.}_{\text{Platinamine.}} \quad \underbrace{P\left\{\begin{matrix}C^2H^3\\C^2H^3\\C^2H^3\end{matrix}\right.}_{\text{Triphosphmethylamine.}}$$

In the first of the above formulæ we have the type or starting point, ammonia itself. In the next we find one atom of hydrogen (two volumes) replaced by one atom (two volumes) of the radical methyle. In the third we find two atoms of hydrogen replaced; and in the fourth illustration all three have been replaced by methyle. The fifth formula is that of ammonia, in which one equivalent of hydrogen is replaced by phenyle, forming phenylamine, or, as it is more usually termed, aniline. The sixth illustrates a very peculiar substitution. In it we find two atoms of hydrogen replaced by the platinicum of the late illustrious chemist, M. Gerhardt, who regards platinum as entering into substitutions with two atomic weights, as if it were two metals The one being the platinum of chemists generally, its atomic weight being 99 (and its symbol Pt); this he calls platinosum. The other being platinicum (pt), with an atomic weight half that of platinosum, namely, 49·5. The last formula is that of the singular base, triphosphmethylamine. In it we see the nitrogen of the original type replaced by phosphorus, and each equivalent of hydrogen by methyle.

It is a fruitful source of annoyance to students and others to find, on looking through chemical works, the same substance represented by different authors with totally different formulæ. We shall endeavour to give a few instances and such explanations as will assist in enabling the student to overcome the difficulty. It is often the case that the differences in the formulæ arise from the works consulted having been written at different dates; the older one is then, in most cases, to be rejected, because it is probable that the formulæ in it have been corrected by subsequent and more accurate researches. It not unfrequently happens that an author writes nitrous acid NO^4, and the true nitrous acid (NO^3) is called hyponitrous acid. It may serve to assist the student in correcting any errors on this point, to consult a list of the oxides of nitrogen according to the nomenclature at present employed: such a list will be found in the article NITROGEN. A still more common cause of difficulty is owing to the different theoretical views of chemists regarding the constitution of chemical sub-

Digitized by Google

stances. The papers of MM. Laurent and Gerhardt, and the more advanced of their followers, are at times almost unintelligible to the beginner, owing to their adoption of different atomic weights to those employed in this country. Whatever opinion may be held by individuals respecting the necessity for the changes adopted by them, it must be remembered that the arguments in favour of their doctrines are in general of the most weighty kind; and moreover, that chemical reactions can often be explained and generalised when seen through the medium of their theoretical views, which present exceedingly embarrassing points if viewed under the old system. It will serve to a great extent to remove the difficulties alluded to if it be remembered that, in order to pass from the ordinary atomic weights used in this work to those employed by M. Gerhardt, it is merely necessary to double the atomic weights of carbon, oxygen, sulphur, and selenium, while the hydrogen, nitrogen, phosphorous metals, chlorine, bromine, iodine, and fluorine remain unaltered.

Some of the more advanced chemists of the present day write carbonic acid $C'O^4$, instead of CO^2. This is in consequence of their regarding it as a bibasic instead of a monobasic acid. The same thing applies to sulphuric acid. It is also to be remembered that most modern chemists assume organic bodies to undergo a condensation to four volumes; consequently ether becomes $C^8H^{10}O^2$, instead of C^4H^5O. The same remark applies to many other substances. Bodies that cannot have their vapour relations properly studied, in consequence of their not being volatile without decomposition, are often written in two or three different ways by various authors. It is probable that these anomalies will, for a time, increase rather than diminish, because recent discoveries are constantly showing the inadequacy of the older views of the chemical constitution of bodies to explain the reactions that occur.

It will greatly assist the student in his endeavours to recollect chemical formulæ, if he commits to memory the principal types and the substances which are regarded as formed on their model. The following are those which are best established:—

Type, two atoms of water.—This type is written in such a manner that the replacement of the hydrogen can be distinctly seen. By its side are placed a few of the substances formed on the same model.

Two atoms of water.	Acetic acid.	Alcohol.	Ether.*	Hydrate of potash.	Anhydrous potash.
$O^2\left\{\begin{matrix}H\\H\end{matrix}\right.$	$O^2\left\{\begin{matrix}C^4H^3O^2\\H\end{matrix}\right.$	$O^2\left\{\begin{matrix}C^4H^5\\H\end{matrix}\right.$	$O^2\left\{\begin{matrix}C^4H^5\\C^4H^5\end{matrix}\right.$	$O^2\left\{\begin{matrix}K\\H\end{matrix}\right.$	$O^2\left\{\begin{matrix}K\\K\end{matrix}\right.$

In the above simple illustrations of the type water we have, in the case of acetic acid, one atom of hydrogen replaced by the oxidised radical acetyle $C^4H^3O^2$, and the other by one atom of basic hydrogen. By basic hydrogen is meant, that it acts the part of, and can be replaced by, a metal. The opinions of chemists with regard to the nature of the radical existing in acetic acid are divided. Some consider the acid as the hydrated teroxide of the non-oxidised radical acetyle (C^4H^3), and therefore write its formula $C^4H^3O^2 + HO$. But as the chloride of the oxidised radical can be isolated, we cannot doubt its existence. Moreover, there is no doubt of the existence of the other radical, C^4H^3, because we find it replacing hydrogen in the base acetylamine. See ACETYLAMINE. But the conclusion must be drawn from these facts that there are two radicals, one existing in acetic acid $C^4H^3O^2$, which Williamson calls othyle, and another, sometimes called vinyle C^4H^3, which exists in aldehyde, in olefiant gas, and several other bodies. The radical in acetic acid is, consequently, not C^4H^3, but $C^4H^2O^2$.

The next illustration is that of alcohol, which consists of two atoms of water, in which one atom of hydrogen is replaced by ethyle, and the other by hydrogen. Ether, on the other hand, is derived from the same type, both atoms of basic hydrogen being replaced by ethyle. Hydrate of potash and anhydrous potash will, after what has been said, explain themselves. It will be seen that in all these illustrations, the same vapour volume is preserved, and by this means the exceeding anomaly of ether and alcohol being of different vapour volumes is removed. While the type two atoms of water (= 4 volumes) has an actual existence, it remains for chemists to discover whether we are justified in receiving as types bodies which have no real existence, such as three atoms of water.

Type, two atoms of hydrogen.—The type ammonia has already been sufficiently illustrated; it remains, then, only to show what substances are to be regarded as formed on the type hydrogen. M. Gerhardt, in addition to these, adopts hydrochloric acid as a type; but when we consider that that acid is itself formed on the hydrogen model, it appears unnecessary to raise it to the dignity of a separate type.

* For the typical representation of the mixed and composed ethers, see the article ETHER.

Digitized by Google

Two atoms of hydrogen.	Olefiant gas.	Marsh gas.	Hydrochloric acid.	Benzole.	Prussic acid.	Chloride of ethyle.
$\overbrace{\begin{matrix}H\\H\end{matrix}}$	$\overbrace{\begin{matrix}C^4H^3\\H\end{matrix}}$	$\overbrace{\begin{matrix}C^2H^3\\H\end{matrix}}$	$\overbrace{\begin{matrix}Cl\\H\end{matrix}}$	$\overbrace{\begin{matrix}C^{12}H^5\\H\end{matrix}}$	$\overbrace{\begin{matrix}C^2N\\H\end{matrix}}$	$\overbrace{\begin{matrix}C^4H^5\\Cl\end{matrix}}$

The above will be sufficiently plain after what has been said, it being remembered that C^2H^3 is methyle, C^4H^5 ethyle, $C^{12}H^5$ phenyle, and C^2N cyanogen.

It is sometimes a source of perplexity to the beginner to find that the formulæ of salts are written by different authors in a somewhat different manner. Thus sulphate of potash will, by one, be written SO^3,KO, and by another SO^4K. The reason of this will become plain from the following considerations:—*All salts are derived from acids by the substitution of metals for hydrogen.* Thus if, instead of writing sulphuric acid SO^3,HO, we write SO^4H, we shall at once see that sulphate of potash, SO^4K, is sulphuric acid in which one equivalent of hydrogen is replaced by potassium. It is true that the relation between acids and salts may be more completely seen by using a different class of formulæ, founded on the theory of types; but, nevertheless, the above illustrations will serve to explain why one person will write acetate of potash $\overbrace{\begin{matrix}C^4H^3O^4,\\K\end{matrix}}$, another $\overbrace{\begin{matrix}C^4H^3O^3,O,\\K\end{matrix}}$, a third $C^4H^3O^3,KO$, and perhaps a fourth $C^4H^3O^2,KO^2$.

On the modes of determining the empirical and rational formulæ of substances from the results of their analysis.— It now remains to show how the formulæ of bodies are determined. There are two kinds of formulæ — the empirical and rational. An empirical formula merely indicates the simplest ratio existing between the elements present; a rational formulæ shows the absolute constitution of an atom or equivalent of any substance. Sometimes the expression rational formula is used in a more extended sense, and then signifies the actual manner in which the elements are arranged in a compound molecule, but this happens so seldom, that we shall in this work understand the term in the sense first given.

An empirical formula can always be deduced from the mere result of an accurate analysis. A rational formula, on the other hand, demands a knowledge of the atomic weight of the substance. The latter datum can be best determined — 1st, by the analysis of a compound with a substance the atomic weight of which is well established; 2nd, by determining the density of its vapour.

Empirical formulæ. — The percentage composition of a compound having been accurately found, the empirical formula may be deduced from the following rule:— Divide the percentage of each constituent by its atomic weight, and reduce the number so obtained to its lowest terms. Suppose, for example, the empirical formula of nitric acid to be required, the percentage being:—Nitrogen, 25·9; oxygen, 74·1.

These numbers, divided by their respective atomic weights, give :—

$$\frac{25\cdot9}{14}=85$$

$$\frac{74\cdot1}{8}=9\cdot26$$

To reduce these numbers to their lowest terms, it is merely necessary to divide 9·26 by 1·85. The simplest terms being :—Nitrogen, 1·00: oxygen, 5·00. Nitric acid consequently consists of one equivalent of nitrogen, and five of oxygen.

Rational formulæ.—In the above illustration we found the simplest ratio existing between the elements of nitric acid. But it will be seen that, for aught that appears there, it may consist of n times NO^5. It becomes necessary, therefore, to find the atomic weight of the acid, and then to find the number of atoms of the elements (combined in the above ratio), which will make that atomic weight. In order to do this, it will be proper to determine the atomic weight of the acid from the data procured by the first method, given above. In order to accomplish this, a salt was analysed for the percentages of soda and nitric acid, with the annexed result:—Soda, 36·47; nitric acid, 63 53.

The required datum, namely, the atomic weight of the acid can easily be obtained by saying,—*As the percentage of base is to the percentage of acid, so is the atomic weight of the base to the atomic weight of the acid.* In the instance given we have, therefore:—

36·47	:	63·53	::	31	:	53·999
Percentage of base.		Percentage of acid.		Atomic weight of base.		Atomic weight of acid.

Digitized by Google

It is evident that 53·999 may be written 54·0 without any inaccuracy. If, therefore, we add together the equivalents of nitrogen and oxygen in the ratio found in the empirical formula, we shall have:—

1 equivalent of nitrogen = 14
5 equivalents of oxygen = 40

54 = the atomic weight of the acid.

We will now consider the mode of determining the rational formula of a substance from the results of the analysis and the density of the vapour. Suppose a hydrocarbon to have yielded on analysis:—Carbon, 85·714; Hydrogen, 14·286 (= 100);

And— $\frac{85{\cdot}714}{6} = 14{\cdot}286$ $\frac{14{\cdot}286}{1} = 14{\cdot}286$

The quotient being the same, the empirical formula becomes C^6H^6. It remains, therefore, to determine the value of n. The density of the vapour was found to be 2·9064. Now the hydrocarbons always possess a condensation to four volumes. In the article EQUIVALENTS, CHEMICAL, rules are given for ascertaining the equivalents of substances from the densities of their vapours. For four volume formulæ the rule is:—Divide the density of the gas by half the density of hydrogen. Applying this rule we have:—

$$\frac{2{\cdot}9064}{{\cdot}0346} = 84{\cdot}00.$$

It is therefore necessary to find what multiple of the atomic weight of CH will make 84·00. Now $C + H = 6 + 1 = 7$, and $7 \times 12 = 84$. Consequently, the formula is 12(CH), or, as it is always written, $C^{12}H^{12}$.

The above rules will suffice to enable any person to determine the empirical and rational formulæ of substances from the results of analysis.—C. G. W.

CHERRY COAL. A soft non-caking coal. The coals of Staffordshire, of Derbyshire, and much of the Scotch coal appears to belong to this variety. See COAL.

CHERRY TREE. The Tunbridge turners use the wood largely, considering the wood of the black heart cherry the best. It is a hard, close-grained wood, of a pale red-brown colour.

CHERRY WATER, distilled from wild cherries, contains some bitter almond oil. See ALMOND OIL.

CHERT, a siliceous mineral nearly allied to chalcedony and flint, but less homogeneous and simple in texture. A gradual passage from chert to limestone is not uncommon.—*Lyell.* *Chert* is a term often applied to hornstone, and to any impure flinty rock, including the jaspers.—*Dana.*

Chert is worked extensively out of the carboniferous limestone quarries of Flintshire, especially at Halkin and at Talacre. It is also produced in considerable quantities in the same formation in Derbyshire. It is used in the Potteries.

CHESSY COPPER or CHESSYLITE, a variety of the blue carbonate of copper which is found in great beauty at Chessy near Lyons.

CHESTNUT. (*Castanea vesca.*) The wood of this, the sweet or Spanish chestnut, is sometimes used in house carpentry. The wood of an oak (*Quercus sessiliflora*) is often mistaken for it.

The wood of the horse chestnut (*Æsculus hippocastum*) is one of the white woods much used by the turners of Tunbridge; it is also employed for brush backs. The white (*inner*) bark of the horse chestnut, when infused in boiling water, produces a yellow fluid, which possesses the remarkable power of *fluorescence*, that is, it *throws back* from its first surface a set of rays of high refrangibility, and of a blue colour, while the ordinary yellow rays are duly transmitted. The phenomena have been fully investigated by Professor Stokes, to whom the name is also due. See FLUORESCENCE.

CHICA is a red colouring principle made use of in America by some Indian tribes to stain their skins. It is extracted from the *Bignonia chica* by boiling its leaves in water, decanting the decoction, and allowing it to settle and cool, when a red matter falls down, which is formed into cakes and dried. It is not much used in this country. The *crajuru* or *carcuru*, which is imported from Para in Brazil is more frequently employed. The dyes are probably identical, but one is purer than the other. See CARAJURA.

CHICORY. The root of the *Chicorium intybus.* Wild Succory or Chicory. This plant is cultivated in various parts of England, growing well in a gravelly and chalky soil; also in Belgium, Holland, Germany, and France. The roots of the wild succory were formerly used medicinally; it possesses properties in many respects resembling those of the dandelion, but it is rarely employed for curative purposes in the present day.

Digitized by Google

Chicory root roasted has been employed as a substitute for coffee for more than eighty years. (*Constantini Nachricht von d. Cichorianwurzel*, 1771.) It is now employed extensively as a mixture with coffee, which, although allowed, cannot be regarded other than an adulteration.

Chicory root is heated in iron cylinders, which are kept revolving as in the roasting of coffee. In this country about two pounds of lard are added to every cwt. of chicory during the roasting process: in France butter is used; by this a lustre and colour resembling that of coffee is imparted to it. When roasted the chicory is ground to powder and mixed with the coffee. Chicory has been supposed by some persons to be wholesome and nutritive, while others contend that it is neither one nor the other; however, no obvious ill effects have been observed to arise from its employment, if we except the occasional tendency to excite diarrhœa when it has been used to excess. The analysis of chicory root by John gave 25 parts *watery bitter extractive*, 3 parts *resin*, besides *sugar*, *sal ammoniac*, and *woody fibre*. Waltl procured *inulin* from it, but the quantity varies greatly in different roots. The following remarks on the adulteration of chicory are by Dr. Pereira.

"Roasted chicory is extensively adulterated. To colour it, Venetian red and, perhaps, reddle are used. The former is sometimes mixed with the lard before this is introduced into the roasting machine; at other times it is added to the chicory during the process of grinding. Roasted pulse (peas, beans, and lupines), corn (rye and damaged wheat), roots (parsnips, carrots, and mangold wurzel), bark (oak-bark tan), wood dust (logwood and mahogany dust), seeds (acorns and horse-chestnuts), the marc of coffee, coffee husks (called coffee-flights), burnt sugar, baked bread, dog biscuit, and baked livers of horses and bullocks (!), are substances which are said to have been used for adulterating chicory. A mixture of roasted pulse (peas usually) and Venetian red has been used, under the name of *Hambro' powder*, for the same purpose.

"The following are the chief modes of examining chicory with the view to the detection of these adulterations:—

"1st. Careful examination of the odour, flavour, and appearance to the naked eye of the suspected powder. In this way foreign substances may sometimes be detected.

"2nd. A portion of the dried powder is to be thrown on water; the chicory rapidly imbibes the water and falls to the bottom, whereas some intermixed powders (as the marc of coffee) float.

"3rd. The suspected powder is to be submitted to careful microscopical examination. Pulse and corn may be detected by the size, shape, and structure of the starch grains. The tissues of barks, woods, and other roots may also be frequently distinguished from those of chicory.

"4th. A decoction of the suspected chicory is then to be prepared, and, when cold, to be tested with solution of iodine and persulphate of iron.

"Iodine colours a decoction of pure chicory brownish; whereas it produces a purplish, bluish, or blackish colour with decoctions of roasted pulse, roasted corn, baked bread, roasted acorns, and other substances containing starch. Persulphate or perchloride of iron does not produce much effect on a decoction of pure chicory, but it communicates a bluish or blackish tint to a decoction of oak-bark, of roasted acorns, and other substances containing tannic or gallic acids.

"5th. By incineration, pure dried chicory yields from 4 to 5 per cent. of a grey or fawn-coloured ash. If Venetian red, or any earthy or mineral substances, be present, a larger amount of ash is obtained. Moreover, when Venetian red has been employed, the colour of the ash is more or less red."

In 1864 we *imported* of *chicory raw or kiln dried.*

	cwts.	computed real value.
From Hanover	1,522	£571
Holland	13,474	5,684
Belgium	121,074	50,986
From other parts	202	83
Total	136,272	57,324

Of *chicory roasted or ground* 48,575 lbs., of the compute value of 606*l.*

CHILDRENITE. This mineral may be regarded as an hydrous phosphate of alumina and iron. Its composition being phosphoric acid, 27·8; alumina, 14·4; protoxide of iron, 31·8; protoxide of manganese, 8·9; water, 17·6. (*Dana.*) At Crinnis mine in Cornwall, Childrenite is found on slate, and at Tavistock in Devonshire, with apatite.

CHIMNEY. (*Cheminée*, Fr.; *Schornstein*, Germ.) (The whole of this article is

Digitized by Google

retained as written by Dr. Ure. His investigation on some of the points involved being of much value.) Chimney is a modern invention for promoting the draught of fires and carrying off the smoke, introduced into England so late as the age of Elizabeth, though it seems to have been employed in Italy 100 years before. The Romans, with all their luxurious refinement, must have had their epicurean cookery placed in perpetual jeopardy from their kitchen fires, which, having no vent by a vertical tunnel in the walls, discharged their smoke and frequently their flames at their windows, to the no small alarm of their neighbours, and annoyance of even the street passengers.

Chimneys in dwelling houses serve also the valuable purpose of promoting salubrious circulation of air in the apartments, when not foolishly sealed with anti-ventilating stove-chests.

The first person who sought to investigate the general principles of chimney draughts, in subserviency to manufacturing establishments, was the celebrated Montgolfier. As the ascent of heated air in a conduit depends upon the diminution of its specific gravity, or, in other words, upon the increase of its volume by the heat, the ascensional force may be deduced from the difference between the density of the elastic fluid in the interior of the chimney, and of the external air; that is, between the different heights of the internal and external columns of elastic fluid supposed to be reduced to the same density. In the latter case, the velocity of the gaseous products of combustion in the interior of the chimney is equal to that of a heavy body let fall from a height equal to the difference in height of the two aerial columns.

To illustrate this position by an example, let us consider the simple case of a chimney of ventilation for carrying off foul air from a factory of any kind; and suppose that the tunnel of iron be incased throughout with steam at 212° Fahr. Suppose this tunnel to be 100 yards high, then the weight of the column of air in it will be to that of a column of external air 100 yards high, assumed at 32° Fahr., inversely as its expansion by 180°; that is, as 1000 is to 1·375; or as 72·727 is to 100. The column of external air at 32° being 100 yards, the internal column will be represented by 72·727; and the difference = 27·27, will be the amount of unbalanced weight or pressure, which is the effective cause of the ventilation. Calculating the velocity of current due to this difference of weight by the well-known formula for the fall of heavy bodies, that is to say, multiplying the above difference, which is 27·27, by the constant factor 19·62, and extracting the square root of the product; thus, $\sqrt{19{\cdot}62 \times 27{\cdot}27} = 23{\cdot}13$ will be the velocity in yards per second, which, multiplied by 3, gives 69·39 feet. The quantity of air which passes in a second is obtained of course by multiplying the area or cross section of the tunnel by this velocity. If that section is half a yard, that is = a quadrangle $2\frac{1}{4}$ feet by 2, we shall have $23{\cdot}13 \times 0{\cdot}5 = 11{\cdot}565$ cubic yards, $= 312\frac{1}{4}$ cubic feet.

The problem becomes a little more complicated in calculating the velocity of air which has served for combustion, because it has changed its nature, a variable proportion of its oxygen gas of specific gravity 1·111 being converted into carbonic acid gas of specific gravity 1·524. The quantity of air passed through well-constructed furnaces may, in general, be regarded as double of what is rigorously necessary for combustion, and the proportion of carbonic acid generated, therefore, not one half of what it would be were all the oxygen so combined. The increase of weight in such burned air of the temperature of 212°, over that of pure air equally heated, being taken into account in the preceding calculation, will give us about 19 yards or 57 feet per second for the velocity in a chimney 100 yards high incased in steam.

In comparing the numbers resulting from the trials made on chimneys of different materials and of different forms, it has been concluded that the obstruction to the draught of air, is directly proportional to the length of the chimneys, and to the square of the velocity, and inversely to their diameter.

With an ordinary wrought iron pipe of from 4 inches to 5 inches diameter, attached to an ordinary stone, burning good charcoal, the difference is prodigious between the velocity calculated by the above theoretical rule and that observed by means of a stop watch, and the ascent of a puff of smoke from a little tow dipped in oil of turpentine thrust quickly into the fire. The chimney being 45 feet high, the temperature of the atmosphere 68° Fahr. the velocity per second was:

Trials	By Theory.	By Experiment.	Mean Temperature of Chimney.
1	26·4 feet	5 feet	190° Fahr.
2	29·4 „	5·76 „	212° „
3	34·5 „	6·3 „	270° „

To obtain congruity between calculation and experiment, several circumstances must be introduced into our formulæ. In the first place, the theoretical velocity must

Digitized by Google

be multiplied by a factor, which is different according as the chimney is made of bricks, pottery, sheet iron, or cast iron. This factor must be multiplied by the square root of the diameter of the chimney (supposed to be round), divided by its length, increased by four times its diameter. Thus, for pottery, its expression is $2{\cdot}06\sqrt{\frac{D}{L+D}}$; D being the diameter, and L the length of the chimney.

A pottery chimney, 33 feet high, and 7 inches in diameter, when the excess of its mean temperature above that of the atmosphere was 205° Fahr., had a pressure of hot air equal to 11·7 feet, and a velocity of 7·2 feet per second. By calculating from the last formula, the same number very nearly is obtained. In none of the experiments did the velocity exceed 12 feet per second, when the difference of temperature was more than 410° Fahr.

Every different form of chimney would require a special set of experiments to be made for determining the proper factor to be used.

This troublesome operation may be saved by the judicious application of a delicate differential barometer, such as that invented by Dr. Wollaston; though this instrument does not seem to have been applied by its very ingenious author in measuring the draughts or ventilating powers of furnaces.

If into one leg of this differential siphon, water be put, and fine spermaceti oil into the other, we shall have two liquids, which are to each other in density as the numbers 8 and 7. If proof spirit be employed instead of water, we shall then have the relation of very nearly 20 to 19. I have made experiments on furnace draughts with the instrument in each of these states, and find the water and oil siphon to be sufficiently sensible; for the weaker draughts of common fire-places the spirits and oil will be preferable barometric fluids.

To the lateral projecting tube of the instrument, as described by Dr. Wollaston, I found it necessary to attach a stop-cock, in order to cut off the action of the chimney, while placing the siphon, to allow of its being fixed in a proper state of adjustment, with its junction line of the oil and water at the zero of the scale. Since a slight deviation of the legs of the siphon from the perpendicular changes very considerably the line of the level, this adjustment should be made secure by fixing the horizontal pipe tightly into a round hole, bored into the chimney stalk, or drilled through the furnace door. On gently turning the stop-cock, the difference of atmospheric pressure corresponding to the chimney draught will be immediately indicated by the ascent of the junction-line of the liquids in the siphon. This modification of apparatus permits the experiment to be readily rectified by again shutting off the draught, when the air will slowly re-enter the siphon; because the projecting tube of the barometer is thrust into the stop cock, but not hermetically joined; whereby its junction-line is allowed to return to the zero of the scale in the course of a few seconds.

Out of many experiments made with this instrument, I shall content myself with describing a few, very carefully performed at the breweries of Messrs. Trueman, Hanbury, and Buxton, and of Sir H. Meux, Bart., and at the machine factory of Messrs. Braithwaite; in the latter of which I was assisted by Captain Ericssen. In the first trials at the breweries, the end of the stop-cock attached to the differential barometer was lapped round with hemp, and made fast into the circular peep-hole of the furnace door of a wort-copper, communicating with two upright parallel chimneys, each 18 inches square and 50 feet high. The fire was burning with fully its average intensity at the time. The adjustment of the level being perfect, the stop-cock orifice was opened, and the junction level of the oil and water rose steadily, and stood at $1\frac{1}{4}$ inches, corresponding to $\frac{1{\cdot}25}{8} = 0{\cdot}156$ of 1 inch of water, or a column of air 10·7 feet high. This difference of pressure indicates a velocity of 26 feet per second. In a second set of experiments, the extremity of the stop-cock was inserted into a hole bored through the chimney stalk of the boiler of a Boulton and Watt steam-engine of twenty-horse power. The area of this chimney was exactly 18 inches square at the level of the bored hole, and its summit rose 50 feet above it. The fire-grate was about 10 feet below that level. On opening the stop-cock, the junction line rose $2\frac{1}{4}$ inches. This experiment was verified by repetition upon different days, with fires burning at their average intensity, and consuming fully 12 lbs. of the best coals hourly for each horse's power, or nearly one ton and a third in twelve hours. If we divide the number $2\frac{1}{4}$ by 8 the quotient 0·28 will represent the fractional part of 1 inch of water supported in the siphon by the unbalanced pressure of the atmosphere in the said chimney; which corresponds to $19\frac{1}{4}$ feet of air, and indicates a velocity in the chimney current of 35 feet per second. The consumption of fuel was much more considerable in the immense grate under the wort copper, than it was under the steam-engine boiler.

In my experiments at Messrs. Braithwaite's factory, the maximum displacement of the junction line was 1 inch, when the differential oil and water barometer was placed

Digitized by Google

in direct communication with a chimney 15 inches square, belonging to a steam boiler, and when the fire was made to burn so fiercely, that, on opening the safety-valve of the boiler, the excess of steam beyond the consumption of the engine rushed out with such violence as to fill the whole premises. The pressure of one-eighth of an inch of water denotes a velocity of draught of 23·4 feet per second.

In building chimneys, we should be careful to make their area rather too large than too small; because we can readily reduce it to any desired size by means of a sliding register plate near its bottom, or a damper plate applied to its top, adjustible by wires or chains passing over pulleys. Wide chimneys are not so liable as narrow ones to have their draught affected by strong winds. In a factory, many furnace flues are often conducted into one vertical chimney stalk, with great economy in the first erection, and increased power of draught in the several fires.

Vast improvements have been made in this country of late years in building stalks for steam boilers and chemical furnaces. Instead of constructing an expensive, lofty scaffolding of timber round the chimney, for the bricklayers to stand upon, and to place their materials, pigeon-holes, or recesses, are left at regular intervals, a few feet apart, within the chimney, for receiving the ends of stout wooden bars, which are laid across, so as to form a species of temporary ladder in the interior of the tunnel. By means of these bars, with the aid of ropes and pulleys, everything may be progressively hoisted for the building of the highest engine or other stalks. An expert bricklayer, with a handy labourer, can in this way raise, in a few weeks, a considerable chimney, 40 feet high, 5 feet 8 inches square outside, 2 feet 8 inches inside at the base, 28 inches outside, and 20 inches inside at the top. To facilitate the erection, and at the same time increase the solidity of an insulated stalk of this kind, it is built with three or more successive plinths, or recedures, as shown in *fig.* 450. It is necessary to make such chimneys thick and substantial near the base, in order that they may sustain the first violence of the fire, and prevent the sudden dissipation of the heat. When many flues are conducted into one chimney stalk, the area of the latter should be nearly equal to the sum of the areas of the former, or at least of as many of them as shall be going simultaneously. When the products of combustion from any furnace must be conducted downwards, in order to enter near the bottom of the main stalk, they will not flow off until the lowest part of the channel be heated by burning some wood shavings or straw in it, whereby the air siphon is set agoing. Immediately after kindling this transient fire at that spot, the orifice must be shut by which it was introduced; otherwise the draught of the furnace would be seriously impeded. But this precaution is seldom necessary in great factories, where a certain degree of heat is always maintained in the flues, or, at least, should be preserved, by shutting the damper plate of each separate flue, whenever its own furnace ceases to act. Such chimneys are finished at top with a coping of stone-slabs, to secure their brick-work against the infiltration of rains, and they should be furnished with metallic conducting rods, to protect them from explosions of lightning.

When small domestic stoves are used, with very slow combustion, as has been recently proposed upon the score of a misjudged economy, there is great danger of the inmates being suffocated or asphyxied, by the regurgitation of the noxious burned air. The smoke doctors who recommend such a vicious plan, from their ignorance of chemical science, are not aware that the carbonic acid gas of coke or coal must be heated 250° F. above the atmospheric air to acquire the same low specific gravity with it. In other words, unless so rarefied by heat, that gaseous poison will descend through the orifice of the ash-pit, and be replaced by the lighter air of the apartment. Drs. Priestley and Dalton have long ago shown the co-existence of these twofold crossing currents of air, even through the substance of stoneware tubes. True economy of heat and salubrity alike require vivid combustion of the fuel, with a somewhat brisk draught inside of the chimney, and a corresponding abstraction of air from the apartment. Wholesome continuous ventilation, under the ordinary circumstances of dwelling-houses, cannot be secured in any other way. Were these mephitic stoves, which have been of late so ridiculously puffed in the public prints, generally introduced, the faculty would need to be immediately quadrupled to supply the demand for medical advice; for headaches, sickness, nervous ailments, and apoplexy would become the constant inmates of every inhabited mansion. The phenomena of the grotto of Pausilippo might then be daily realised at home among those who ventured to recline upon sofas in such carbonated apartments; only, instead of a puppy being suffocated *pro tempore*, human beings would be sacrificed, to save two pennyworths of fuel *per diem*.

The figures upon the following page represent one of the two chimneys erected at the Camden Town station, for the steam boilers of the two engines of 60-horse power each, belonging to the London and Birmingham Railway company. These engines then drew their train of carriages up the inclined plane of Hampstead Hill. The chimneys were designed by Robert Stephenson, Esq., engineer to the Company,

Digitized by Google

executed by William Cubitt, Esq., of Gray's Inn Road, — and do equal honour to both gentlemen, being probably among the most elegant and substantial specimens of this style of architecture in the world. In the section, *fig.* 450,

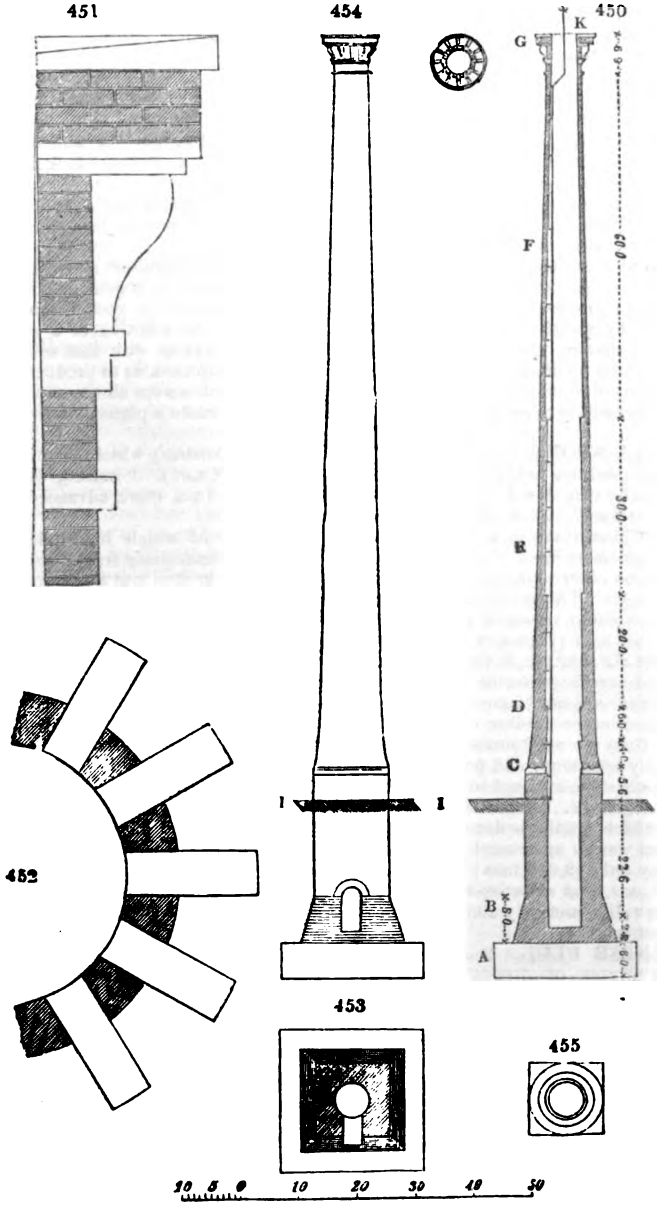

A represents a bed of *concrete*, 6 feet thick, and 24 feet square.

B, brick footings set in cement; the lower course 19 feet square.

C, Bramley-fall stone base, with a chain of wrought iron let into it.

D, a portion, 15 feet high, curved to a radius of 113 feet, built entirely of Malm paviours (a peculiarly good kind of bricks).

Digitized by Google

E, shaft built of Malm paviours in mortar.

F, ditto, built from the inside, without exterior scaffolding.

G, the cap, ornamented (as shown in the plan alongside) with Portland stone, the dressings being tied together with copper cramps and an iron bond.

Fig. 451 represents the mouldings of the top, upon an enlarged scale.

Fig. 452, a plan of the foundation, upon an enlarged scale.

Fig. 453, ditto, at the level of the entrance of the flue as seen in

Fig. 454, the elevation of the chimney.

Fig. 455, plan at the ground level I, in *figs.* 450 and 454.

K, *fig.* 450, the lightning conducting rod.

CHINA CLAY. KAOLIN, or PORCELAIN CLAY, *which see.* A fine white clay produced by the decomposition of the felspar of the granite rocks. It is found and prepared in this country in Cornwall and Devonshire.

CHINA INK. (*Encre de Chine*, Fr.; *Chinesischer Tusch*, Germ.) It is said that the true China ink is made from the condensed smoke or soot of burned camphor; and hence, when of the best quality, it has this odour.

Most of the China ink is made from oil lampblack, disguised as to smell with musk, or with a little camphor-black. The binding substance is gelatine, commonly made from parchment; but isinglass answers equally well. A good imitation may be made by dissolving isinglass in warm water, with the addition of a very little alkali to destroy the gelatinising power, and incorporating with that solution, by levigation on a porphyry slab, as much of the finest lampblack as to produce a mass of the proper consistence. The minute quantity of alkali serves also to saponify the oil which usually adheres to lampblack, and thereby to make a pigment miscible with water.

CHINA STONE. A semi-decomposed granite, (*Petuntze*) which has nearly the same composition as the China clay (see PORCELAIN CLAY). "Indeed, the China clay can be considered as little more than this granite in a more advanced state of decomposition."—*De la Beche.*

The China stone is a kind of granite, the felspar of which has undergone a partial decomposition. It is carefully selected so as to be entirely free of schorl, and requires no other preparation for the market than to be broken into a size convenient for carriage. This granite is of a peculiar nature; it does not contain any mica, but numerous glossy scales of greenish-yellow talc. It has been stated by some authors that "this rock (*Pegmatite*, or *Graphic granite*), after exposure to the decomposing action of the weather, is the chief source" of the China stone and clay. This represents but very imperfectly — indeed, incorrectly — the conditions. The decomposition of the granite is not brought about by the action of the weather, but by some peculiar decomposition proceeding to a considerable depth through the whole mass. In many places, from the very surface to the depth of more than 100 feet, this decomposition is equally apparent; and possibly it extends to much greater depths in some places. The same stone exposed to the air does not, in any ordinary time, exhibit any signs of disintegration. No satisfactory explanation has yet been offered of the conditions under which granite is decomposed to produce the Kaolin and the China stone.

There was an agreement existing amongst the producers of China stone to send off annually only 12,000 tons; but when the demand is brisk, this has been extended to 18,000 tons, and sometimes even more. The value of the China stone at the works in Cornwall is annually about 1800*l.* The whole that is raised is sent to the Staffordshire potteries.

CHINESE BLUE. Several compositions are sold under this name; it is sometimes a mixture of ultramarine with flake white, and sometimes a mixture of cobalt blue and white lead.

CHINOLINE. $C^{18}H^{7}N$. A volatile base, found in coal naphtha, and also, accompanied by several others, in the basic fluid obtained by distilling cinchonine with potash.—C. G. W.

CHINTZ. (*Zitz*, Germ.) Probably derived from the East, the Hindoo name *cheent*, and the Persian *chinz*, signifying spotted or stained. The term is applied in this country to a fast-printed calico, in which several colours are imprinted upon a white or coloured ground, and usually glazed.

CHIOS or CHIAN TURPENTINE. The *Pistacia terebinthus*, growing in Syria and the Greek Archipelago, yields this turpentine. The turpentine harvest of Scio, according to Tournefort, is made from the end of July to October, by cutting crossways with a hatchet the trunks of the largest trees. The turpentine runs down on flat stones placed under the trees, where it hardens. The quantity produced from each tree does not exceed eight or ten ounces. Its consistency is that of honey; its colour greenish-yellow, with an agreeable turpentine odour. It is often called Cyprus turpentine, but is seldom seen pure in this country, other coniferous turpentines being sold for it.

Digitized by Google

CHLORATE OF POTASSIUM, formerly called oxymuriate of potash. This interesting saline compound has become the object of a pretty extensive manufacture, in consequence of its application to make matches for procuring instantaneous light, and a detonating powder for fire arms. It may be prepared both in the humid and dry way.

Having made a strong solution of purified potash, or carbonate of potash, with from 2 to 3 parts of water, we pass through it in a Woulfe's apparatus a current of chlorine gas, till it ceases to absorb any more. Chloride of potash and chloride of potassium alone are formed as long as there is an excess of alkali in the solution; but afterwards in the further reaction of the materials, the chloride passes into the state of a chlorate, and, as such, precipitates from the solution. During the first half of the operation, that is, till the potash is about one half saturated with chlorine, as indicated by litmus paper ceasing to be darkened and beginning to be blanched, only the chloride of potassium or muriate of potash falls. The process should be interrupted at this point in order to remove the salt, to wash it, to add the washings to the liquor, and then to transmit the gas freely through the solution. As the operation advances, less muriate of potash is formed, and at length nothing but the pure chlorate is separated in crystals. When finally the bubbles of gas pass through without being sensibly absorbed the process is known to be completed; the liquid may then be allowed to settle, and be poured off from the crystals of chlorate of potash, which are purified from the muriate by dissolving them in three times their weight of boiling water and filtering the solution while hot. On its cooling, the chlorate will separate in pearly-crystalline plates. It may be rendered quite pure by a second crystallisation, in which state it does not affect solution of nitrate of silver.

The above potash ley usually gets a reddish tint in the course of the process in consequence of a little manganesic acid coming over with the chlorine, but it gradually loses this colour as the saturation become complete, and then the solution turns yellow. The tubes for conveying the gas should be of large diameter, if they be plunged into the saline solution, because the crystallisation which takes place in it is apt to choke them up. This inconvenience may, however, be obviated by attaching to the end of the glass tube a tube of caoutchouc terminated in a small glass funnel, or simply the neck of a caoutchouc bottle with a part of its body, whose width will not be readily closed with a saline crust. The residuary lixivium may be used in another operation, or it may be evaporated down to half its bulk and set aside to crystallise, whereby some more chlorate will be obtained, mixed indeed with muriate and carbonate, from which, however, it may be separated by a second crystallisation. In general the pure chlorate obtained does not exceed $\frac{1}{10}$ the weight of the potash employed; because in thus treating potash with chlorine, $\frac{3}{4}$ of it are converted into muriate of potash and only $\frac{1}{4}$ into chlorate, and a part of the latter adheres to the muriate, or is lost in the mother waters of the crystallisations.

The chlorate of potassium may be more conveniently manufactured, like that of lime, in the dry way. St. Romer patented at Vienna the following method for that purpose in 1821:—Ten pounds of crystallised peroxide of manganese are to be finely pulverised, mixed with 10 pounds of plumbago, and 30 pounds of common salt, and put into the leaden retort represented in *fig.* 456, p. 710. From the middle of the helmet-shaped lid of this vessel, a lead tube, 2 feet long, and 2 inches wide, conducts to the receiver, which is a square earthen pan, hard glazed both within and without, of the same capacity with the retort. The end of the tube must be made fast to a frame at the height of 6 inches above the bottom of the receiver. Upon its inner side, 4 inches apart, brackets are to be fixed for supporting a series of laths or shelves of white wood, on which a number of little paper or paste-board boxes are to be laid. In these boxes 10 pounds of the purest carbonate of potash, prepared from tartar, are to be spread. The receiver must now be covered with a lid made tight by a water lute. Twenty pounds of concentrated sulphuric acid, previously diluted with 16 pounds of water, and then cooled, are to be poured upon the mixed materials in the retort, the lid immediately secured, with the tube adjusted in the receiver. The whole must be allowed to operate spontaneously without heat for 12 hours. At the end of this time the retort is to be surrounded with a water bath and steadily heated during 12 hours, and then left to cool for 6 hours. The apparatus must now be opened, the cakes of chlorate of potash removed, and freed from muriate by solution and crystallisation.

M. Liebig proposes the following process for obtaining chlorate of potassium:—

Heat chloride of lime in water till it ceases to destroy vegetable colours. In this case a mixture of chloride of calcium and chlorate of potash is obtained. This is to be dissolved in hot water, and to the solution concentrated by evaporation, chloride of potassium is to be added, and then suffered to cool. After cooling, a quantity of crystals of chlorate of potash is obtained, which are to be redissolved and crystallised again to purify them. M. Liebig considers that this will be a cheap process for obtaining chlorate of potash. From 12 oz. of chloride of lime, of so bad a quality that it left 65 per cent. of insoluble matter, he obtained an ounce of chlorate of potash.

Digitized by Google

The only difficulty to overcome in this process is, from the chloride of lime not being so easily decomposed by heat as is generally supposed; a solution of it may be kept boiling for an hour without losing its bleaching power. The best method is to form a thin paste with chloride of lime and water, and then to evaporate it to dryness. If it be required to prepare it by passing chlorine into cream of lime, it is advantageous to keep it very hot.

The chlorate of potassium which separates from the solution by crystallisation has not the form of scales which it usually possesses, but is prismatic: whether this is occasioned by some admixture has not been ascertained; but on recrystallising, it is obtained in the usual form.

The solution ought not merely to be left to cool, in order to procure crystals, for the crystallisation is far from being terminated even after complete cooling; crystals continue to be deposited for 3 or 4 days.

The following modification of the process for making chlorate of potassium is that of M. Vée. A solution of chloride of lime marking 18° or 20° Baumé is to be set upon the fire in a lead or cast iron pot, and when it begins to get hot, there is to be dissolved in it a quantity of chloride of potassium sufficient to raise the hydrometer 3° or 4°. It must then be concentrated as quickly as possible till it marks 30° or 31°, taking care that it does not boil over by the sudden extrication of oxygen. The concentrated liquor is set aside to crystallise in a cool place, when a deposit of chlorate of potassium forms, mixed with chloride of potassium. The mother waters being evaporated to the density of 36°, afford another crop of crystals, after which they may be thrown away.

The salts obtained at the first crystallisation are to be redissolved, and the solution being brought to 15° or 16° is to be filtered, when it will afford upon cooling pure chlorate of potash.

The following ingenious and easy way of making this valuable chlorate was suggested by Professor Graham:—Mix equal atomic weights of carbonate of potash and hydrate of lime (70 of the former, if pure, and 37 of slaked lime in powder), diffuse them through cold water, and transmit chlorine gas through the mixture. The gas is absorbed with great avidity, and the production of a boiling heat. When the saturation is complete, carbonate of lime remains, and a mixture of muriate and chlorate of potash, which latter salts are to be separated, as usual, by the difference of their solubility in water.

It has been remarked on the above process, that it effects no saving of potassa, and therefore is far inferior to the one long practised in several parts of Germany, especially at Giessen, and introduced into this country a good many years ago by Dr. Wagenmann, from Berlin. The chlorine is passed into a mixture of one equivalent of chloride of potassium (76), and 6 equivalents of hydrate of lime (222), previously stirred with water to the consistence of a thin paste. Thus the calcium of the lime unites with the chlorine to form chloride of calcium, while the chloride of potassium is converted into chlorate of potassa, which salt is easily separated in crystals by its sparing solubility, which remains unfrozen even at the cold of 220° F.

Chlorate of potassium may also be made by saturating with chlorine a mixture of 74 parts of chloride of potassium (muriate of potash) and 168 parts of quicklime, brought to the consistency of a thin pap by the cautious addition of water. The mass being dissolved in warm water, and evaporated and cooled, yields crystals of chlorate of potash, while a mother water of chloride of calcium (muriate of lime) remains. The following process has likewise been prescribed:—Mix 10 parts of good chloride of lime and water into a pap, and evaporate to dryness, whereby it is converted into a mixture of chloride of calcium and chlorate of lime devoid of bleaching power; dissolve it in water, filter, concentrate the solution by evaporation, then add to it 1 part of chloride of potassium and cool for crystallisation. The salt which may thereby be separated from the chloride of calcium will afford 0·83 of pure chlorate of potash. By this process of Professor Liebig ⅔ of the potash are saved, but much oxygen is wasted in the evaporation to dryness of the chloride of lime; and consequently, much chloric acid is lost towards the production of the salt. Vée mixes the chloride of lime pap, before heating it, with the chloride of potassium, boils the mixture smartly, whereby much oxygen is undoubtedly thrown off, and then sets the liquor aside to crystllisee L. Gmelin suggests that saturation of the liquor with chlorine before boiling might be advantageous. Gay-Lussac has suggested to make this valuable salt by precipitating a solution of chloride of lime with carbonate (or sulphate) of potash, saturating the liquor after filtration with chlorine gas, evaporating, and crystallising.*

* Mr. Calvert forms a mixture of 8½ equivalents of burnt lime for 1 equivalent of caustic potash, and passes a current of chlorine through the hot mixture. Under these conditions chloride of calcium and chlorate of potassium are produced, and the quantity of the latter is stated to be very nearly the theoretical amount.

Digitized by Google

Professor Juch's process is to pass chlorine gas into a mixture of 1 pound caustic lime and 1 pound carbonate of potash, with 8 pounds of water. The resulting chloride of potash readily separates in the filtered liquid by crystallisation from the very soluble chloride of calcium. By this method potash is not wasted in the useless production of chloride of potassium. Chloride, the old oxymuriate of potash, has a cooling, somewhat unpleasant and nitrous taste; it does not bleach. At 60° F. 100 parts of water dissolve 6 parts of the salt, and at its boiling point, or 220°, 60 parts. When heated to dull ignition in a glass retort, it gives out 39·15 per cent. of its weight of oxygen, and becomes thereby chlorate of potassium. When strongly triturated in a mortar it crackles, throws out sparks, and becomes luminous. It deflagrates upon red hot cinders like nitre: when triturated along with sulphur or phosphorus, it detonates with great violence, not without danger to the hands of the operator, if they be not protected by a thick glove. Similiar detonations may be produced with cinnabar or vermilion, sulphuret of potassium, volatile oils, sugar, &c; but they can be affected only by the smart blow of a heated hammer and anvil. The lucifer matches formerly employed for procuring a light, were the wooden sulphur matches, coated with a paste containing phosphorus, which, when dry, would ignite by friction. To prepare the paste, phosphorus was melted with a certain quantity of water at 120°, the requisite proportion of nitrate, with a small proportion of chlorate of potash, was dissolved in this water, a small quantity of binoxide of manganese or red lead added, and the liquid thickened with gum; the whole was well triturated together in a mortar till the globules of phosphorus ceased to be visible to the eye, and the mass was coloured with prussian blue or with minium. The points of the matches were dipped into this paste, and then cautiously dried in a stove. The use of the gum was to serve as a varnish to protect the phosphorus from oxidation by the air. The mixture for percussion powder for guns may be 54 parts of chlorate of potash, 21 parts of nitre, 18 parts of sulphur, 7 parts of lycopodium; or 100 parts of chlorate of potassium, 55 parts of nitre, 33 parts of sulphur, 17 parts of sifted touch wood, and 17 parts of lycopodium; or 20 parts of gunpowder, freed from nitre by means of water, and then mixed with 11 parts of chlorate of potash and water to the consistence of a thin paste. This powder when dry is dangerous to handle, being very apt to explode. But this danger is guarded against, by letting fall a drop of the paste into each percussion cap, and leaving it to dry there. In the detonation of this powder chlorine is generated which rusts the metal very fast.

CHLORATES. Compounds of chloric acid with salifiable bases.

CHLORHYDRIC ACID. The modern name for HYDROCHLORIC ACID. The gas was discovered by Priestly in 1772; dissolved in water it has been long known as spirit of salts. See MURIATIC ACID.

CHLORIDES. "The term chloride is applied to all compounds of chlorine, which may be derived from one or more atoms of hydrochloric acid, by the substitution of a metal or other radical (which may itself contain *chlorine*) for an equivalent quantity of hydrogen."—Watts' "Dictionary of Chemistry."

CHLORIC ACID. The acid constituent of the preceding salts. It consists of one equivalent of chlorine = 35·5, and five of oxygen = 40, the sum of which (75·5) is the equivalent of the acid. This acid, which is only known in combination with one equivalent of water, is exceedingly unstable, being instantly decomposed by contact with organic matter, and undergoing gradual spontaneous decomposition in diffused day-light. It is prepared by decomposing chlorate of potash by the addition of hydro-fluosilicic acid, which forms with potash an insoluble compound.

CHLORINE, one of the most energetic of the undecomposed substances, exists, under ordinary circumstances, as a greenish-yellow gas; but when exposed to a pressure of 4 atmospheres, it becomes a transparent liquid, which remains unfrozen even at the cold of—220° F. In the first state, its density, compared to air (reckoned 1·000), is 2·47; in the second, its density, compared to water (1·000), is 1·33. It is obtained either by the action of sulphuric acid on a mixture of common salt and binoxide of manganese, or by the action of moderately strong hydrochloric acid on binoxide of manganese alone. In the first case, the proportions are 7 parts by weight of oil of vitriol, previously diluted with 7 parts of water and 4 parts of common salt, intimately mixed with 3 parts of binoxid of manganese; in the latter, which is the most convenient method, hydrochloric acid, specific gravity 1·15, is gently heated with the finely powdered binoxide, in the proportions of about three oz. of oxide to half a pint of acid. The hydrochloric acid should not be more diluted than above indicated, otherwise an explosion may occur, probably in consequence of the formation of one of the explosive oxides of chlorine. The gas must be collected either over brine or over warm water.

Chlorine has a peculiar smell and irritates the nostrils most violently when inhaled, as also the windpipe and lungs. It is eminently noxious to animal life, and if breathed in its undiluted state, would prove instantly fatal. It supports the combustion of many bodies, and indeed spontaneously burns several without their being pre-

Digitized by Google

viously kindled. The resulting combinations are called chlorides, and act most important parts in many manufacturing processes.

Water absorbs, at the ordinary temperature of the atmosphere, about double its volume of chlorine, and acquires the colour, taste, and smell of the gas, as well as its power of destroying or bleaching vegetable colours. When this aqueous chlorine is cooled down to 36° F., dark-yellow crystalline plates appear in it of the hydrate of chlorine, which are composed in 100 parts of 27·7 chlorine, and 72·3 water. If these crystals be heated to about 45°, they liquefy, and the gas flies off.

Chlorine has a powerful affinity for hydrogen, not only combining with it rapidly in the gaseous state, but seizing it in many of its liquid and solid combinations: as in certain volatile hydrocarbons, which it inflames; and in yellow wax, cotton, and flax, which it whitens. The compound of chlorine and hydrogen gases is hydrochloric or muriatic acid gas. Binoxide of manganese, when mixed with liquid hydrochloric acid, as in the above process, abstracts the hydrogen and eliminates the chlorine. When chlorine is passed into water, it decomposes some of it, seizes its hydrogen to form a little hydrochloric acid, and enables its oxygen to unite, either with the chlorine into chlorous acid, or with the remaining water, and to constitute oxygenated water. Hence aqueous chlorine, exposed to the sunbeam, continually evolves oxygen, and ere long becomes hydrochloric acid.

This watery compound acts in a powerful way upon coloured vegetable fibres, extracting their hydrogen or colouring element by the twofold affinities of the chlorine and oxygen for it. Hence chlorine, as a bleaching agent, requires to be tempered by the quiescent affinity of some alkaline base—potash, soda, or lime. Malaria, or morbific and putrescent miasmata, consist chiefly of hydrogenous matter as their bases, and are best counteracted by chlorine, where it can be conveniently applied. In fumigating the Millbank Penitentiary, Mr. Faraday found that a mixture of 1 part of common salt and 1 part of binoxide of manganese, when acted upon by two parts of oil of vitriol previously mixed with one part of water (all by weight), and left till cold, produced the best results. Such a mixture at 60°, in shallow pans of red earthenware, liberated its chlorine gradually, but perfectly, for four days. The salt and manganese were well mixed, and used in charges of 3½ pounds of the mixture. The acid and water were mixed in a wooden tub, the water being put in first, and then about half the acid; after cooling, the other half was added. The proportions of water and acid were 9 measures of the former to 10 of the latter.—See Watts' "Dictionary of Chemistry."

CHLORIDES OF POTASH, SODA, AND LIME. These are the most important preparations through which chlorine exerts its peculiar powers upon the objects of manufacture. When a weak solution of caustic potash or soda is saturated with chlorine, it affords a bleaching liquor, still used by some bleachers and calico-printers for delicate processes; but the price of the alkalies has led to the disuse of these chlorides as a general means, and has occasioned an extensive employment of chloride of lime. This compound was first employed in the liquid form as a bleaching agent in 1798, and in the following year the idea suggested itself to Mr. Charles Macintosh, at that time a partner of Messrs. Tennant and Knox, to impregnate quicklime in a dry state with chlorine, and a patent was taken out accordingly. The discovery of the bleaching property of chlorine is due to Berthollet, who announced the fact to the Academy of Sciences in 1785. In the following year, the new method of bleaching was introduced into Great Britain by Mr. Watt. In 1788, Mr. Thomas Henry of Manchester exhibited calico bleached by chlorine, without having any knowledge of the previous experiments of Watt; and in the following year a detailed method of the process was published by Berthollet. To give some idea of the rapidity with which bleaching is conducted by the improved modern processes, the writer of the article on this subject in the *Encyclopædia Britannica* quotes the following illustration. A bleacher in Lancashire received 1400 pieces of grey muslin on a Tuesday, which on the Thursday immediately following were returned bleached to the manufacturers at the distance of 16 miles and they were packed up and sent off that very day to a foreign market.

A great variety of apparatus has been at different times contrived for favouring the combination of chlorine with the slaked lime for the purpose of commerce. The simplest construction for subjecting lime-powder to chlorine, is a large chamber 8 or 9 feet high, built of siliceous sandstone, having the joints of the masonry secured with a cement composed of pitch, resin, and dry gypsum in equal parts. A door is fitted into it at one end, which can be made air-tight by strips of cloth and clay lute. A window on each side enables the operator to judge how the impregnation goes on by the colour of the air, and also gives light for making the arrangements within at the commencement of the process. As water lutes are incomparably superior to all others where the pneumatic pressure is small, I would recommend a large valve or door on

Digitized by Google

this principle to be made in the roof, and two tunnels of considerable width at the bottom of each side wall. The three covers could be simultaneously lifted off by cords passing over a pulley, without the necessity of the workman approaching the deleterious gas, when the apartment is to be opened. A great number of wooden shelves, or rather trays, 8 or 10 feet long, 2 feet broad, and 1 inch deep, are provided to receive the riddled slaked lime, containing generally about 2 atoms of lime to 3 of water. These shelves are piled one over another in the chamber, to the height of 5 or 6 feet, cross bars below each keeping them about an inch asunder, that the gas may have free room to circulate over the surface of the calcareous hydrate.

The alembics for generating the chlorine, which are usually nearly spherical, are in some cases made entirely of lead, in others of 2 hemispheres joined together in the middle, the upper hemisphere being lead, the under one cast-iron. The first kind of alembic is enclosed for two-thirds from its bottom in a leaden or iron case, the interval of two inches between the two being destined to receive steam from an adjoining boiler Those which consist below of cast-iron have their bottom directly exposed to a very gentle fire; round the outer edge of the iron hemisphere a groove is cast, into which the under edge of the leaden hemisphere fits, the joint being rendered air-tight by Roman or patent cement. In this leaden dome there are four apertures, each secured by a water-lute. The first opening is about 10 or 12 inches square, and is shut with a leaden valve, with incurvated edges, that fit into the water channel at the margin of the hole. It is destined for the admission of a workman to rectify any derangement in the apparatus of rotation, or to detach hard concretions of salt from the bottom.

The second aperture is in the centre of the top. Here a tube of lead is fixed, which descends nearly to the bottom, and down through which the vertical axis passes. To its lower end the cross bars of iron, or of wood, sheathed with lead, are attached, by whose revolution the materials receive the proper agitation for mixing the dense manganese with the sulphuric acid and salt. The motion is communicated either by the hand of a workman applied from time to time to a winch at top, or it is given by connecting the axis with wheel work, impelled by a stream of water or a steam-engine. The third opening admits the siphon-formed funnel, through which the sulphuric acid is introduced; and the fourth is the orifice of the eduction-pipe.

Manufacturers differ much from each other in the proportion of their materials for generating chlorine. In general, 10 cwt. of salt are mixed with from 10 to 14 cwt. of manganese, to which mixture, after its introduction into the alembic, from 12 to 14 cwt. of sulphuric acid are added in successive portions. That quantity of oil of vitriol must, however, be previously diluted with water, till its specific gravity becomes about 1·6. But, indeed, this dilution is seldom actually made, for the manufacturer of bleaching-powder almost always prepares his own sulphuric acid for the purpose, and therefore carries its concentration no higher in the leaden boilers than the density of 1·65, which, from Dr. Ure's table of sulphuric acid, indicates $\frac{1}{4}$th of its weight of water, and therefore $\frac{1}{3}$rd more of such acid must be used.

The fourth aperture admits the eduction pipe. This pipe is afterwards conveyed into a leaden chest or cylinder, in which all the other eduction-pipes also terminate. They are connected with it simply by water-lutes, having hydrostatic pressure of 2 or 3 inches. In this general *diversorium* the chlorine is washed from adhering muriatic acid, by passing through a little water, in which each tube is immersed, and from this the gas is let off by a pretty large leaden tube, into the combination room. It usually enters in the top of the ceiling, whence it diffuses its heavy gas equally round.

Four days are required, at the ordinary rate of working, for making good marketable bleaching-powder. A more rapid formation would merely endanger an elevation of temperature, productive of muriate of lime, at the expense of the bleaching quality. But skilful manufacturers use here an alternating process. They pile up, first of all, the wooden trays only in alternate shelves in each column. At the end of two days the distillation is intermitted, and the chamber is laid open. After two hours the workman enters, to introduce the alternate trays covered with fresh hydrate of lime, and at the same time rakes up thoroughly the half-formed chloride in the others. The door is then secured, and the chamber, after being filled for two days more with chlorine, is again opened, to allow the first set of trays to be removed, and to be replaced by others containing fresh hydrate, as before. Thus the process is conducted in regular alternation; thus very superior bleaching-powder is manufactured, and thus the chlorine may be suffered to enter in a pretty uniform stream. But for this judicious plan, as the hydrate advances in impregnation, its faculty of absorption becoming diminished, it would be requisite to diminish proportionately the evolution of chlorine, or to allow the excess to escape, to the great loss of the proprietor, and, what is of more consequence, to the great detriment of the health of the workmen.*

* According to C. H. Mène (Comptes Rendus, Nov. 22, 1847), chloride of lime may be prepared almost pure, and instantaneously, by pouring upon slaked lime, water saturated with chlorine. The

Digitized by Google

The manufacturer generally reckons on obtaining from one ton of rock-salt, employed as above, a ton and a half of good bleaching-powder. But the following analysis of the operation will show that he ought to obtain two tons.

When a mixture of sulphuric acid, common salt, and black oxide of manganese are the ingredients used by the manufacturer of bleaching-powder, the absolute proportions are, upon the hydrogen scale of equivalents:—

1 eq. chloride of sodium	58·5	29·75
1 eq. binoxide of manganese	43·5	21·25
2 eq. oil of vitriol	98·0	49·00
	200·0	100·00

and the products ought to be;—

Chlorine disengaged	1 eq.	35·5	17·75
Sulphate of soda	1 eq.	71·0	35·50
Sulphate of manganese	1 eq.	75·5	37·75
Water	2 eq.	18·0	2·00
		200·0	100·00

These proportions are, however, very different from those employed by the manufacturers; and they ought to be so, on account of the impurity of their oxide of manganese. Yet, making allowance for this, many of them commit great errors in the relative quantities of their materials.

From the preceding computation, it is evident that 1 ton of salt with 1 ton of the above native oxide of manganese, properly treated, would yield 0·59 of a ton of chlorine, which would impregnate 1·41 tons of slaked lime, producing 2 tons of bleaching-powder, stronger than the average of the commercial specimens; or, allowing for a little loss, which is unavoidable, would afford 2 tons of ordinary powder, with a little more slaked lime.

Fig. 456 represents a retort of lead, well adapted to the evolution of chlorine from the mixture of salt, manganese, and sulphuric acid, or from manganese and muriatic acid.

The interior vessel is cast in lead, and it has round its bottom part a cast-iron steam case. The salt and manganese are introduced by the aperture *c*, and the sulphuric acid by the siphon funnel *f*. The contact of these three substances is continually renewed by the agitator or stirrer B, which consists of wrought or cast-iron sheathed with lead. *e* is the gas discharge pipe. The residuums are drawn off by the bottom discharge pipe G. The heating case receives its steam by the pipe *h*.

456

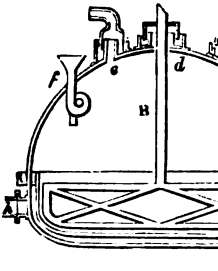

457

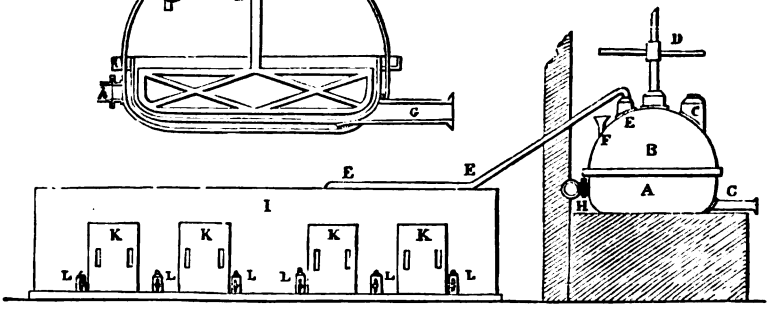

The chlorine gas, *fig.* 457, is conveyed from the retort B, into the chamber I, by the tube E E E. This chamber is divided into four compartments, to receive the gas dis-

chlorine is absorbed the moment the liquid comes into contact with the lime, and if the supernatant water is immediately decanted, and the lime remaining at the bottom of the vessel saturated by frequent repetition of the treatment with chlorine water, *perfectly pure* chloride of lime is obtained. Labarraque finds that the absorption of chlorine by moistened hydrate of lime is greatly facilitated by mixing it with $\frac{1}{10}$th of its weight of common salt.'

Digitized by Google

engaged from four retorts, like the above. The bottom of it is covered with a stratum three or four inches thick of quicklime, newly slaked and sifted, which is stirred about from time to time, by the rakes L L L L. When the saturation is sufficient, the chloride of lime is taken out by the doors K K K K. The size of this apparatus allows 2 cwt. of manganese, and its equivalent quantity of salt and sulphuric acid, or of muriatic acid, to be introduced at once into the retort. D is the handle of the agitator.

The same form of retort will suit perfectly well to prepare chlorine for making liquid chloride of lime, which is preferred by many bleachers and calico-printers who have conveniences for preparing it themselves. The most concentrated solutions of the dry chloride of lime do not mark more than 6° B. (specific gravity 1·04), and discolour only 50 volumes of Gay-Lussac's solution of indigo, whilst the chloride made in the humid way marks from 8° to 9° B. (about 1·060), and discolours 80 volumes of the same solution.

In the chloride of lime apparatus, most generally used by the skilful calico-printers of Mülhausen, the mixture of muriatic acid and manganese is put into glass globes, with long necks, heated upon a sand-bath. The chlorine is conveyed by glass tubes into a cylindrical stone cistern, containing milk of lime. The furnace of the sand-baths is made of cast-iron, and has brick partitions, to give each retort its own fire. The smoke of all these fires goes off by a flue into sheet iron pipes. The cistern is made of siliceous sandstone. Its cover is of wood, coated with a resinous cement; and it fits at its edges into grooves cut in the stone. A wheel serves to agitate the liquid continually; its paddles being kept at 2 inches distance from the sides of the cistern. The milk of lime is introduced by a funnel, and the chloride is drawn off by a discharge pipe. I think the lead retort and agitator used in this country greatly preferable to the experimental laboratory plan described above. In all such apparatus we should avoid giving any pressure to the tubes or vessels, and should not therefore dip the extremities of the gas-pipes beneath the surface of the liquid, but rather facilitate the combination of the chlorine and the lime, by enlarging the surfaces of contact and by agitating. Intermediate vessels containing water, or the chemical cascade of M Clement, are very useful for absorbing any muriatic acid which may be disengaged along with the chlorine, and thereby preventing the needless formation of muriate of lime in the chambers or cisterns of impregnation.

When the solution of the chloride of lime is mixed with hydrate of lime, it bears, without decomposing, a pretty high temperature, provided it be not too long continued; it may even, in certain cases, be raised to near the boiling point without suffering a marked loss of its discolouring power; but when the chloride is deprived of that excess of lime, it is decomposed in a short time, even at a heat of 110° F.

When chlorine is admitted to milk of lime, it infallibly produces some muriate of lime; but the quantity is kept at a *minimum* by constantly presenting an excess of lime to the gas with the agitator, and by keeping the temperature as low as possible. Hence the influx of gas should not be so rapid as to generate much heat. An automatic agitator, moved by steam or water power, is therefore much better than one driven by the hand of the operator, who is apt to intermit his labours.

If the liquor becomes hot at the end of the process, it should be immediately drawn off into large stone bottles and cooled. The rose colour, which sometimes supervenes, is due to a minute quantity of manganese: the strongest liquid chloride of lime that can be prepared will not discolour more than 80 times its volume of Gay-Lussac's indigo test.

On acting upon cotton-cloth with a concentrated solution of chloride of lime, at from 110° to 120° F., pure carbonic acid is disengaged, and the texture of the cloth is injured. Here the hydrogen of the water, and of the cotton, being seized by the chlorine, the liberated oxygen combines with the carbon to form carbonic acid. In the discharge-troughs, where printed calicoes are passed through strong solutions of chloride of lime, stalactitic crusts of carbonate of lime come to be formed in this way.

The residue in the still is a mixture of sulphate of manganese, bisulphate of soda, and free sulphuric acid: it is mixed with as much common salt as the sulphuric acid is able to decompose, and the whole is gradually fused in a furnace. By this fusion, the sulphate of manganese is decomposed, as well as the common salt, and there remains sulphate of soda, mixed with oxide of manganese and peroxide of iron. Lixiviation gets rid of these two oxides, and leaves a solution of sulphate of soda, which is evaporated to dryness, mixed with pounded coal, and ignited in a reverberatory furnace. By this process the Glauber salt is converted into sulphuret of sodium, from which carbonate of soda is extracted by simple and well-known processes.

In the year 1846, Mr. Pattinson patented an improved mode of manufacturing chlorine. In this process he made use of a stone vessel or generator, enclosed in a double iron vessel. The hydrochloric acid, specific gravity 1·16, is poured into the generator, and on a grating or false bottom is placed the binoxide of manganese in lumps.

Digitized by Google

The temperature of the contents of the generating vessel is then raised to 180° F., by means of steam, made to circulate between the stone vessel and the iron casing. This heat is continued for about 18 hours; and then, by means of a suitable pipe passing to the bottom of the generator, steam, under a pressure of 10 lbs. to the inch, is injected into the vessel for about two minutes, and this is repeated every half hour for about six hours. In this process no mechanical agitation is required, as the steam enters with sufficient force, under the pressure above mentioned, to effect the requisite agitation of the contents, and by clearing the lumps of manganese from all adhering matters, expose a fresh surface continually to the action of the acid.

In carrying this process into practical operation, Mr. Pattinson found that the apparatus is liable to be completely deranged, and the iron vessel destroyed by the action of the hydrochloric acid, if the stone generating vessel should happen to get broken; to obviate which inconvenience, and to enable the generator to be used though in a broken condition, the inner iron vessel is perforated; and the spaces between the two iron vessels, and between the inner iron vessel and the stone generator, are filled with coal tar, or pitch, thickened by boiling to such a consistence as to be tough, but not brittle, when cold. Steam, circulating through a coil of pipe passing between the iron vessels, serves to maintain the tar at the requisite degree of heat; and in the event of the breakage of the stone generator, the liquefied tar flows into the fissure, and prevents the escape of the hydrochloric acid into the steam vessel.

A method of treating the residuum obtained in the manufacture of chlorine was patented in 1855 by Mr. C. Tennant Dunlop. It consists in transforming the chloride of manganese, first into carbonate and then into oxide, by the action of heat. Whatever impurity the chloride of manganese may contain—as chloride of iron, for instance—is first separated, either by calcination or by the agency of a suitable precipitant. Practical working has shown that the carbonate of manganese thus treated yields an oxide of a richness equivalent to that of 80 per cent. pure peroxide. The carbonate of manganese may be obtained by precipitation from the chloride by carbonate of ammonia. The chloride of ammonium resulting from this treatment may either be employed as such, or it may be re-transformed in the usual way into carbonate for the precipitation of fresh chloride of manganese. Hydrate of lime is also used as a precipitant, the resulting hydrated oxide of manganese being subsequently converted into carbonate by the transmission through it of a stream of carbonic acid.

By another process, carbonate of manganese is obtained by passing carbonic acid through the solution of chloride of manganese which has been previously mixed with a quantity of carbonate of soda. The carbonate of soda, under the influence of carbonic acid, decomposes the chloride of manganese into carbonate, from which the oxide can be obtained. The essential feature of this invention is the production of artificial oxide of manganese, by first converting the chloride into carbonate, and afterwards this latter into oxide, by the joint agencies of heat and atmospheric air.

Mr. Dunlop has also obtained a patent for the production of chlorine by a very elegant method, which dispenses with the use of manganese altogether. It consists in mixing common salt with nitrate of soda, and submitting the mixture to the action of sulphuric acid. Chlorine and nitrous gas are evolved, and are caused to traverse a vessel containing strong sulphuric acid, by which the nitrous gas is readily absorbed, and the chlorine passes of. A current of atmospheric air is now passed through the nitrous sulphuric acid, until the nitrous is converted into nitric acid. These mixed acids are then made to act upon common salt without any addition of nitrate of soda, and the same gaseous products are obtained as before.

Nature of Bleaching Powder.—An elaborate series of experiments on the manufacture of chloride of lime was made in 1822 by Dr. Ure, the most important results of which are embodied in the subjoined table.

Prepared with Protohydrate of Lime without pneumatic pressure. The process carried on until the lime ceased to obtain chlorine.					Commercial Specimens.		
	Synthesis.	First Analysis.	Second Analysis.	Mean.			
Chlorine - - -	39·39	40·00	40·62	40·31	23	22	28
Lime - - -	46·00	44·74	46·07	45·40	46 }	78	71
Water - - -	14·60	15·26	13·31	14·28	31 }		
Chloride of Lime -	100·00	100·00	100·00	100·00	100	100	100

Digitized by Google

Mr. Graham found that hydrate of lime, dried at 212°, absorbed afterwards little or no chlorine; but that, when dried over sulphuric acid, it was in the most favourable condition for becoming chloride of lime. A dry, white, pulverulent compound is obtained by exposing the last hydrate to chlorine, which contains 41·2 to 41·4 chlorine in 100 parts, of which 39 parts are available for bleaching, the remainder going to form chloride of calcium and chlorate of lime. This appears to be the maximum absorption of chlorine by dry hydrate of lime; but the bleaching powder of commerce rarely, even when fresh prepared, contains more than 30 per cent. of chlorine, and after being kept for several months, the proportion often falls as low as 20 per cent. A compound containing one equivalent of chlorine and one equivalent of hydrate of lime, should contain 48·57 chlorine and 51·43 hydrate of lime; a compound of one equivalent of chlorine and two of hydrate of lime, should contain 32·42 chlorine and 67·58 hydrate of lime; and these are about the proportions in good commercial specimens. It would not be advisable to attempt to manufacture a more highly chlorinated product, as the stability of the compound is increased by an excess of lime. Where a stream of chlorine is transmitted through water holding hydrate of lime in suspension, the lime is entirely dissolved, and the full equivalent of chlorine is absorbed. Water poured upon bleaching powder dissolves out the bleaching combination, leaving a large residue of lime. Ten parts of water are required for one part of dry chloride. The solution emits the peculiar odour of hypochlorous acid; and if we regard bleaching powder as hypochlorite of lime, the reaction which occurs in its formation will be thus represented:—

$$2CaO + 2Cl = CaCl + CaO,ClO.$$

But good bleaching powder is not deliquescent, neither does alcoholdissolve anything from it, both which should occur if the compound contained free chloride of calcium. It is possible, however, that the two salts may exist in bleaching powder in the form of a double salt, or that the chlorine is in direct combination with the oxide. If the compound be supposed to be pure chloride of lime, the reaction is simply an absorption of chlorine; and the same should be the case with the other bleaching compounds —chloride of soda, for instance. But when carbonate of soda, saturated with chlorine (Labarraque's Liquor), is evaporated, no chlorine is evolved, and the residue still possesses bleaching properties. The true nature of bleaching powder is open, therefore, to speculation.

The bleaching action of solution of chloride of lime is very slow unless an acid be added to it. When dilute sulphuric acid in insufficient quantity is employed, no chlorine is evolved but hypochlorous acid, which may be distilled off and condensed in a suitable receiver; but with excess of acid, chlorine only is liberated. When calicoes and other woven goods are to be bleached, they are first thoroughly cleansed by boiling successively with lime-water and a weak solution of caustic soda; they are then digested in a solution of bleaching powder, specific gravity 1·02, containing about 2½ per cent. of chloride of lime; after which they are immersed in very dilute sulphuric acid, which, by liberating the chlorine within the fibres of the cloth, rapidly removes the colour. The goods are then washed, a second time steeped in alkali, and again passed through a weaker solution of chloride, and then through dilute acid; after which they are thoroughly washed in water. The quantity of liquor necessary for 700 lbs. of cloth is 971 gallons, containing 388½ lbs. of chloride. When white figures are required on a coloured ground, the pattern is printed on the cloth with tartaric acid, thickened with gum. The colour is discharged in those places where the acid was present, but elsewhere untouched. When chloride of lime is heated, it evolves oxygen gas, and sometimes chlorine, and it becomes converted into a mixture of chlorate of lime and chloride of calcium, which has no bleaching properties. Half an ounce of chloride of lime boiled in two ounces of water yields, according to Keller, 165 cubic inches of oxygen contaminated with chlorine.

The property of chlorine, to destroy offensive odours and to prevent putrefaction, gives to the chlorides of lime and soda a high value. On this important subject Pereira has the following remarks (Mat. Med. vol. i.) with reference to medical police. "If air be blown through putrid blood, and then through a solution of chloride of lime, carbonate of lime is precipitated, and the air is disinfected; but if the air be first passed through putrid blood, then through caustic potash, or milk of lime, to abstract the carbonic acid, and afterwards through the solution of chloride of lime, it retains its stinking quality. Chloride of lime may be employed to prevent the putrefaction of corpses previous to interment;—to destroy the odour of exhumed bodies during medico-legal investigations;—to destroy bad smells and prevent putrefaction in dissecting-rooms and workshops in which animal substances are employed (as catgut manufactories);—to destroy unpleasant odours from privies, sewers, drains, wells, docks, &c.;—to disinfect ships, hospitals, prisons, stables, &c. The various modes

Digitized by Google

of applying it will readily suggest themselves. For disinfecting corpses, a sheet should be soaked in a pailful of water containing a pound of chloride, and then wrapped round the body. For destroying the smell of dissecting rooms, &c., a solution of the chloride may be applied by means of a gardening pot." Of equal importance is this substance to the medical practitioner. The poisonous exhalations from foul sewers may be counteracted by a slight inhalation of chlorine gas, as obtained from a little chloride of lime placed in the folds of a towel wetted with acetic acid.—H. M. N.

The importance of chlorine as a disinfecting agent appears to have been fully proved during the period of the cattle plague. Both Dr. Angus Smith and Mr. Crookes, in their reports, give several very striking examples of the power of this agent in cleansing sheds and houses which have been occupied by cattle suffering under and dying from the disease. Carbolic acid, however, appears to be preferred by one of these chemists. Both these preparations may, it is clear, be used with satisfaction when required.

CHLORITE, from χλωρος, *green*. Silicates of magnesia and alumina occurring in igneous rocks, and forming a characteristic ingredient in *chlorite slate*. It often occurs in quartz crystals in vermiform crystallisations.

CHLORITES. Salts of chlorous acid. See Watts' "Dictionary of Chemistry."

CHLOROMETRY. The processes or series of processes by which the strength or commercial value of substances containing chlorine, or from which chlorine may be rendered available, is ascertained, is called *Chlorometry*. Chloride (hypochlorite) of lime, of potash, or of soda, and the ores of manganese, are the most important of these substances.

Chloride of lime is a mixture of hypochlorite of lime, chloride of calcium, and hydrate of lime ($CaO,ClO + CaCl + CaO.HO$), and is decomposed by the weakest acids—even by carbonic acid; and therefore, by exposure to the air, it gradually loses its chlorine, and being converted into carbonate of lime, it may become perfectly valueless. This decomposition by all acids is common to all decolourising chlorides (hypochlorites), and may be explained, either by admitting that the decomposing acid (say, for example, the carbonic acid of the air) simply eliminates the hypochlorous acid, the oxygen of which oxidises in a direct manner the calcium of the chloride of calcium mixed with the hypochlorite of lime, thus :—

$$CaO,ClO + CaCl + 2CO^2 = 2CaO,CO^2 + 2Cl;$$

or by considering the decolourising chloride (chloride of lime, for example) not as a hypochlorite, but as a compound resulting from the direct combination of chlorine with CaO (CaO,Cl); in which view of the case the decomposition is explained as follows :—

$$CaO,Cl + CO^2 = CaO,CO^2 + Cl.$$

The value of the decolourising chlorides in general, and of chloride of lime in particular, depends upon the quantity of chlorine which may be liberated from it under the influence of an acid. For technical purposes this estimation is exceedingly important, and should never be neglected by the bleacher.

Chlorine, whether in the free state, or combined with weak alkalies, or caustic lime, having the property of destroying colouring matter of an organic nature, this reaction was from the first resorted to as a means of determining the commercial value of these chlorides; namely, by ascertaining the quantity of a solution of indigo of known strength which could be decolourised by them; for this purpose a test liquor is prepared by dissolving a given quantity of sulphate of indigo in water, and pouring therein, drop by drop, a certain quantity of the sample of chloride of lime previously dissolved in a measured quantity of water. The solution of chloride of lime must be added, drop by drop, to the sulphate of indigo test liquor until the latter turns from blue to yellow, the operator taking care to stir the mixture without intermission.

This method of chlorometry, however, is objectionable, and is, in fact, the worst of all, on account of the difficulty of ascertaining when the reaction is complete; for the yellow colour, resulting from the decomposition of the indigo (chlorisatine), mixing with the original blue colour of the solution, produces a green colour, which interferes with the correctness of the observation. On the other hand, the test liquor of sulphate of indigo always undergoes spontaneous and gradual decolorisation by standing, not only when exposed to diffused light, but even though it be kept in well stoppered bottles, and in the dark.

The process generally adopted now is one which gives exceedingly accurate results; it was contrived by Gay-Lussac, and it is based on the property which arsenious acid (AsO^3) in solution in chlorhydric acid possesses of becoming peroxidised, that is

Digitized by Google

to say, converted into arsenic acid (AsO^5), in the presence of chlorine and water. This reaction may be represented by the following equation :—

$$AsO^3 + 2Cl + 2HO = AsO^5 + 2HCl$$

That is to say, one equivalent of arsenious acid (AsO^3) in presence of two equivalents of chlorine (2Cl) and of two equivalents of water (2HO), produces one equivalent of arsenic acid (AsO^5) and two equivalents of chlorhydric acid (2HCl).

This reaction is so rapid, that if organic substances capable of being decolourised by the action of chlorine are present while it is taking place, the colour is not destroyed so long as any portion of arsenious acid remains unconverted into arsenic acid; but as soon as the last portion of the arsenious acid has been peroxidised, the liquor is instantly decolourised, which reaction at once indicates that the experiment is at an end.

Taking the equivalent of arsenious acid = 99, and that of chlorine = 35·5, it is evident that 99 grains of arsenious acid will correspond to 71·0 of chlorine ($35·5 \times 2 = 71·$); or, which is the same thing, 139·436 grains of arsenious acid will correspond very nearly to 100 of chlorine.

Take, therefore, a certain quantity of the arsenious acid of commerce, reduce it to powder, and dissolve it in hot diluted chlorhydric acid; allow it to recrystallise therefrom, wash the crystalline powder with cold water, dry it well, reduce it into fine powder, and of this dry and pure arsenious acid take now 139·44 grains, prepared as above said, put them into a flask, and add thereto about 3 ounces pure chlorhydric acid, *free from sulphurous and nitric acid*, and diluted with three or four times its bulk of water; keep the whole at a boiling heat until all the arsenious acid has totally dissolved. Pour now the solution into a glass cylinder graduated into 10,000 grains-measures, rinse the flask with water, and pour the rinsings into the graduated glass cylinder until, in fact, it is filled up to the scratch marked 10,000. This done, it is clear that each 1000 grains-measure of that liquor will contain 13·944 grains weight of arsenious acid, corresponding to 10 grains weight of chlorine. This should be labelled "arsenious acid test liquor." If it be desired to prepare a larger quantity of test liquor, instead of 139·44, the operator may take, for example, ten times that quantity of arsenious acid, namely, 1394·44 grains (or, more correctly, 1394·36), and dissolve them in as much liquid as will form 100,000 grains-measures; but he will have to take care to keep it in one or more well stoppered jars, in order that the strength of the solution may not be altered by evaporation.

Having thus prepared a quantity of arsenious acid test liquor, weigh off 100 grains from a fair average sample of the chloride of lime to be examined, and after triturating them first in the dry state, and then with a little water in a glass mortar, and then adding more water, pour the whole into a flask or glass vessel capable of holding 2000 grains-measure, and marked with a scratch at that point. The mortar in which the chloride of lime has been triturated must be rinsed with more water, and the rinsings poured into the 2000 grains-measure glass vessel first mentioned, until the whole of the 2000 grains-measures are filled up to the scratch. The whole must now be well shaken, in order to obtain a uniformly turbid solution, and half of it (namely, 1000 grains-measure) is transferred to an alkalimeter, which therefore will thus be filled up to 0°, and will contain 50 grains of the chloride of lime under examination; and as the 1000 grains-measure of the alkalimeter are divided into 100 degrees, each degree or division will therefore contain 0·5, or half a grain of chloride of lime.

On the other hand, pour also 1000 grains-measure of the arsenious acid test liquor into a somewhat large beaker, and add thereto a few drops of a solution of sulphate of indigo, in order to impart a distinct blue colour to it; shake the glass, so as to give a circular motion to the liquid, and while it is whirling round pour gradually into it the chloride of lime liquor from the alkalimeter, watching attentively the moment when the blue tinge of the arsenious acid test liquor is destroyed. Care must be taken to stir the liquor well during the process, and to stop as soon as the decolourising is effected, which indicates that the whole of the arsenious acid is converted into arsenic acid, and that the process is finished.

The quantity of chlorine contained in the sample is then determined in the following manner:—

We have seen that the 1000 grains measure of the arsenious acid test liquor, into which the chloride of lime liquor was poured from the alkalimeter, contained 13·944 grains weight of arsenious acid, corresponding to 10 grains weight of chlorine. And the 1000 grains-measure of chloride of lime liquor poured from the alkalimeter contained 50 grains weight of chloride of lime, each degree of the alkalimeter containing, therefore, half a grain of chloride of lime.

Let us suppose that, in order to destroy the blue colour of the 1000 grains-measure

Digitized by Google

of the arsenious acid test liquor, 80 divisions (800 grains-measure) of the chloride of lime liquor in the alkalimeter have been employed. It is evident that these 80 divisions contained the 10 grains weight of chlorine necessary to destroy the colour of the arsenious acid test solution, or rather to peroxidise all the arsenious acid (13·944) contained in that solution tinged blue with indigo. And since each division represents half a grain of chloride of lime, 40 grains weight of chloride of lime, containing 10 grains weight of chlorine, must have been present in the 80 divisions employed. If now 40 grains of the chloride of lime under examination contained 10 grains of chlorine, what is the percentage of chlorine in that same chloride? The answer is 25.

$$40 : 10 :: 100 : 25.$$

The chloride of lime submitted to the experiment contained, therefore, 25 per cent. of chlorine.

In the method just described it will be observed that, instead of pouring the arsenious acid test liquor into the solution of the sample, as in alkalimetry, it is, on the contrary, the solution of the sample which is poured into that of the test liquor. It is necessary to operate in this manner, because, otherwise, the chlorhydric acid of the arsenious acid test liquor would disengage at once more chlorine than the arsenious acid could absorb, and thus render the result quite incorrect. On the contrary, by pouring the chloride of lime into the solution of arsenious acid, the chlorine being disengaged in small portions at a time, always meets with an abundance of arsenious acid to react upon. It is better, also, to employ the turbid mixture of chloride of lime, than to allow it to settle and to perform the experiment on the decanted portion.

Instead of arsenious acid, protosulphate of iron may very conveniently be employed; and this method, first proposed, I believe, by Runge, yields also exceedingly accurate results.

This method is based upon the rapid peroxidisation which protosulphate of iron undergoes when in contact with chlorine in the presence of water and of free sulphuric acid, two equivalents of the protosulphate being thereby converted into one equivalent of persulphate, on account of one equivalent of chlorine liberating one equivalent of oxygen from the water, which equivalent of oxygen adds itself to the protoxide of iron which thus becomes converted into peroxide, and consequently into persulphate of iron, while the equivalent of hydrogen, liberated at the same time, forms with the chlorine one equivalent of chlorhydric acid; thus:—

$$2FeO,SO^3 + 2SO^3 + HO + Cl =$$
$$Fe^2O^3,3SO^3 + HCl;$$

by which it is seen that two equivalents of protosulphate of iron correspond to one equivalent of chlorine.

Protosulphate of iron may be obtained in a state of great purity as a by-product of the action of sulphuric acid upon protosulphuret of iron in the preparation of sulphuretted hydrogen, the evolution and reducing action of the latter gas preventing the formation of any peroxide. All the operator has to do is to redissolve in water, with addition of a little sulphuric acid, the crystals which have formed in the sulphuretted hydrogen apparatus, to filter the whole liquor, and to recrystallise it; or else to pour the hot and very concentrated solution into strong alcohol: by the latter process, instead of obtaining the protosulphate in crystals, it is in the shape of a fine clear blue precipitate. Or else, as much piano-forte wire may be dissolved in moderately diluted sulphuric acid as will nearly neutralise it; the liquor is then filtered and left to crystallise, taking care, however, to leave a few fragments of the wire suspended in it, that no peroxidisation may take place; or else the iron solution may be concentrated by heat, and while hot pour into strong alcohol, by which a clear blue crystalline precipitate of pure protosulphate of iron will be obtained. In either case the protosulphate of iron so produced contains 7 equivalents of water of crystallisation ($FeO,SO^3,7HO$).

Take, accordingly, 2 equivalents, or 278 grains, of the crystallised protosulphate of iron, before alluded to, and previously dried between folds of blotting-paper, or moistened with alcohol and left to dry in the air until all odour of alcohol has vanished, and dissolve these 278 grains of protosulphate of iron in water strongly acidified with either sulphuric or chlorhydric acid, so that the liquor may occupy the bulk or volume of 3550 grains of water. 1000 grains of such a solution will therefore contain 78·31 grains of crystallised protosulphate of iron, and will accordingly be peroxidised by, or will correspond to, 10 grains of chlorine. When only one experiment is contemplated, 78·31 of crystallised protosulphate of iron may be at once dissolved in 1000 grains (1 alkalimeter full) of water acidified with sulphuric acid; and this is the protosulphate of iron test liquor.

Digitized by Google

Weigh now 100 grains of the chloride of lime under examination, and dissolve them, as before mentioned, in a glass mortar, with a sufficient quantity of water, so that it may occupy the bulk of 2000 grains-measures of water; pour half of this, namely, 1000 grains-measure, into an alkalimeter divided, as usual, into 100 divisions or degrees, each degree of which will therefore contain half a grain of chloride of lime. Pour gradually the chloride of lime from the alkalimeter into a glass beaker containing 1000 grains-measure of the test solution of protosulphate of iron, above alluded to, stirring all the while, until it is completely converted into persulphate of iron, which may be ascertained by means of strips of paper, previously dipped into a solution of red prussiate of potash and dried, more chloride of lime being poured from the alkalimeter as long as a blue stain is produced by touching the red prussiate of potash test paper with a drop of the solution of protosulphate of iron operated upon. The quantity of chlorine contained in the chloride of lime under examination, is estimated as follows:—Since 1000 grains-measure of the protosulphate of iron test liquor, into which the solution of chloride of lime is poured, contains, as we said, 78·31 grains of proto-sulphate of iron, corresponding to 10 grains of chlorine; and since, on the other hand, 1000 grains-measure of the solution of chloride of lime in the alkalimeter contains 50 grains of chloride of lime, that is to say, $\frac{1}{2}$ grain of that substance in each division of the alkalimeter:

Let us suppose, for example, that the quantity of chloride of lime required to peroxidise the iron of the 1000 grains-measure of protosulphate amounts to 90 divisions, it is evident that the solution contained 45 grains of chloride of lime, and if these 45 grains of chloride of lime contained the 10 grains of chlorine necessary to peroxidise the iron of the protosulphate in the glass beaker, the 100 grains of the same chloride under examination evidently contain 22·22. This calculation is readily effected by dividing 1000 by half the number of the divisions poured from the alkalimeter. The half of 90 (number of divisions employed) being 45, dividing 1000 by 45 is 22·22.

Or, instead of 100 grains, the operator may take only 50 grains of the chloride of lime to be examined, and this will prove a more convenient quantity, in that case, the dividing 1000 by the number of divisions employed, will at once give the percentage. Let us suppose, for example, that 45 divisions only of the 50 grains of chloride of lime solution, taken as sample, to have been employed; then, since these 45 divisions contained the 10 grains of chlorine necessary to peroxidise the iron contained in the 1000 grains-measure of the protosulphate, it is evident that 100 grains will contain 22·22 of chlorine; thus:—

Divisions.		Grains of chlorine.		Divisions.		Grains of chlorine.
45	:	10	::	100	:	$x = 22{\cdot}22$

There are other accurate methods of determining the amount of chlorine in chloride of lime, provided a proper care be bestowed on the operation; but the processes by arsenious acid and by proto-sulphate of iron are by far the less liable to error from the circumstance, among other reasons, that their solutions are less liable to become altered. The other methods also require a longer time, and we shall only mention the rationale of their mode of action.

Thus the process by *chloride of manganese* consists in decomposing a test solution of it by the chloride of lime, to be examined as long as a brown precipitate is produced. The reaction is as follows:—

$$\begin{aligned} &MnCl + CaO,Cl + HO = \\ &MnO^2 + CaCl + HCl. \end{aligned}$$

The process with *yellow prussiate of potash* depends upon the following reaction:—

$$\begin{aligned} &2(FeCy + 2KCy) + Cl = \\ &(3KCy + Fe^2Cy^3) + KCl. \end{aligned}$$

That is to say, 2 equivalents of yellow prussiate (ferrocyanide of potassium) produce 1 equivalent of red prussiate (ferricyanide of potassium), 1 equivalent of chloride of potassium; and, therefore, 2 equivalents = 422 grains of the yellow prussiate will correspond to 1 equivalent = 35·5 of chlorine. The chloride of lime is, as usual, poured into the solution of the chloride of manganese, and the operation is completed when a brown colour begins to appear.

The process by *subchloride of mercury* (Hg^2Cl), which is insoluble in water, is based upon its conversion by chlorine into chloride of mercury ($HgCl$), which is soluble in water, thus:—

$$\begin{aligned} &Hg^2Cl + Cl = \\ &2HgCl. \end{aligned}$$

The *modus operandi* is briefly as follows:—As subnitrate of mercury is difficult to

Digitized by Google

obtain in a perfectly neutral state, and free from basic, or from pernitrate, take a known volume of pernitrate of mercury, precipitate it by an addition of chlorhydric acid, collect the precipitate formed, wash it, dry it at 212° F., and weigh it. Having thus ascertained the quantity of subchloride of mercury contained in the known bulk of pernitrate, 1000 grains measure of it are measured off, and precipitated by an excess of chlorhydric acid; and the whole is then well shaken so as to agglomerate it; a given weight of chloride of lime, say 50 grains, are dissolved as usual in water so as to obtain one alkalimeter full, which is then gradually poured into the liquor containing the precipitated subchloride of mercury, until it completely disappears and the liquor becomes as clear as water, which indicates that the operation is at an end. The number of divisions of the chloride of lime liquor used are then read off, and the quantity of chlorine present in the chloride of lime is easily calculated from the quantity of subchloride of mercury which was known to have existed in the known bulk of pernitrate employed, and which has been converted into perchloride of mercury by the chlorinated liquor poured into it.

Testing of Black Oxide of Manganese for its available Oxygen.

Manganese is found, in combination with more or less oxygen, in a number of minerals, but the principal ores of that substance are the pyrolusite (binoxide of manganese), MnO^2, braunite (sesquioxide of manganese), Mn^2O^3, manganite (hydrated sesquioxide of manganese), $Mn^2O^3 + HO$, hausmannite (red oxide of manganese), Mn^3O^4, &c. &c.

The first, namely, the pyrolusite, is by far the most important of these ores which are chiefly employed for the preparations of chlorine, and their commercial value depends upon the quantity of this gas which a given weight of them can evolve, which quantity is proportionate to that of the oxygen contained in the ore beyond that which constitutes the protoxide of that metal, as will be shown presently. The manufacturer who uses these ores, ought also to take into consideration the amount of impurities which may be present in them, such as earthy carbonates, peroxide of iron, alumina, silica, sulphate of barytes, since these impurities diminish, *pro tanto*, the value of the ore. The estimation of the commercial value of a manganese ore may be accomplished in various ways.

One of these methods consists in first reducing into fine powder a sample of the ore, and treating it by moderately diluted nitric acid. If this produces an effervescence, it is owing to the presence of carbonates, and an excess of nitric acid should then be used, so as to dissolve them entirely. When all effervescence has ceased, even after a fresh addition of acid, the whole should be thrown on a filter, and the residue within the filter should be washed and dried. For technical purposes the weight of these carbonates may be thus easily effected, namely, by weighing a certain quantity of the sample (for example 100 grains), digesting it for a few hours in dilute nitric acid, collecting on a filter, washing, and drying until it no longer diminishes in weight. The loss indicates, of course, the quantity per cent. of the carbonates which it contained. This being done, take a weighed quantity of the sample, dry it well, as just said, introduce it into a small counterpoised retort, at the extremity of which a tube containing fragments of fused chloride of calcium, also weighed, should be adjusted. Apply then to the retort the strongest heat that can be produced by an argand spirit lamp, or by my gas furnace-lamp, and, after some time, disconnect the chloride of calcium tube and weigh it. The increase of weight indicates the quantity of water which has volatilised, and which was yielded principally by the hydrate of sesquioxide (manganite, $Mn^2O^3 + HO$), some portion of which is always found mixed with the peroxide; every grain of water thus evaporated corresponds to 9·77 of manganite.

The contents of the small retort should now be emptied into a counterpoised platinum capsule or crucible, and ignited therein, until, after repeated weighings, the weight is observed to remain uniform; this converts the mass completely into manganoso-manganic oxide (Mn^3O^4). The crucible is then weighed, and the loss indicates the quantities of oxygen evolved, from which that of the peroxide is calculated. Each grain of oxygen corresponds to 2·71 of pure peroxide. This experiment should evidently be carried on with great care, since a small quantity of oxygen represents a large quantity of peroxide.

In order to effect the complete conversion of the peroxide in the sample into red oxide of manganese, as above mentioned, the ignition should be continued for a long time, and the quantity operated upon should be small; if a larger quantity be treated a common fire should be used instead of an argand lamp.

The value of manganese may also be very accurately estimated by measuring the quantity of chlorine which a given weight of the ore produces, when treated by chlorhydric acid.

In order to understand the rationale of this method, the reader must bear in mind

Digitized by Google

that all the oxides of manganese when heated in contact with chlorhydric acid evolve a quantity of chlorine exactly proportionate to that of the oxygen above that which it contained in the protoxide. For example, protoxide of manganese being treated by chlorhydric acid produces only protochloride of manganese, but yields no free chlorine, as shown by the following equation: $MnO + HCl = MnCl + HO$. Not so however the red oxide of manganese or manganoso-manganic oxide (Mn^3O^4), which, when treated by chlorhydric acid, forms protochloride of manganese, but disengages one third of an equivalent of chlorine, as shown by the following equation: Red oxide of manganese, or manganoso-manganic oxide, may be represented by the formula $MnO + Mn^2O^3$, or by Mn^3O^4, or by $3MnO1\frac{1}{3}$; therefore: $1\frac{1}{3}MnO + 1\frac{1}{3}HCl = 1\frac{1}{3}HO + MnCl + \frac{1}{3}Cl$.

Sesquioxide of manganese when treated by chlorhydric acid yields half an equivalent of free chlorine for each equivalent of protochloride of manganese formed; as shown by the following equation: Sesquioxide of manganese, Mn^2O^3, is the same as $2MnO1\frac{1}{2}$; therefore $1\frac{1}{2}MnO + 1\frac{1}{2}HCl = 1\frac{1}{2}HO + MnCl + \frac{1}{2}Cl$.

Lastly peroxide of manganese when treated by chlorhydric acid yields one entire equivalent of chlorine for each equivalent of protochloride formed; as shown by the following equation: Peroxide of manganese is MnO^2; therefore $MnO^2 + 2HCl = 2HO + MnCl + Cl$. And as the commercial value of the ores of manganese depends, as already said, upon the amount of chlorine which they can evolve when treated by chlorhydric acid, the object in view will evidently be attained by determining that quantity.

Runge's method, which we detailed at the beginning of this article in the testing of chloride of lime, may also be applied for the testing of the ores of manganese. That method, it will be recollected, is based upon the rapid peroxidisation which sulphate of protoxide of iron undergoes when in contact with chlorine, water being present; which reaction is represented as follows: $2FeO,SO^3 + HO + Cl = Fe^2O^3,SO^3 + HCl$. Showing that two equivalents of protosulphate of iron represent one equivalent of chlorine, since one equivalent of chlorine is required to convert two equivalents of protosulphate of iron into one of the persulphate of that base. The experiment is performed as follows: Pulverise 278 grains (2 equivalents) of crystallised protosulphate of iron ($2FeO,SO^3,7HO$), and mix them in a small flask with 43·6 grains of the manganese under examination, and previously reduced into very fine powder. These 43·6 grains represent one equivalent of pure binoxide of manganese (MnO^2), and would, therefore, if pure, peroxidise exactly the two equivalents, or 278 of protosulphate of iron. About three fluid ounces of strong chlorhydric acid should now be poured upon the mixture in the flask, which flask must be immediately closed with a perforated cork provided with a tube-funnel drawn to a point, in order that the vapour may escape, and the whole is then rapidly boiled. The chlorine disengaged by the manganese is immediately absorbed by the protosulphate of iron. We just said that 43·6 grains of peroxide of manganese would, if pure, exactly peroxidise the 278 grains of protosulphate of iron, but as the peroxide of manganese of commerce is never pure, it is evident that the 43·6 grains of the sample employed will prove insufficient to peroxidise the iron, and hence, the necessity of ascertaining the amount of protosulphate which could not be peroxidised, and which remains in the acid solution. This may be done by means of a chlorate of potash test-liquor, as follows: Since 1 equivalent (=122·5 grains) of chlorate of potash (=KO,ClO^5) produce, under the influence of boiling chlorhydric acid, 6 equivalents of chlorine, as shown by the equation $KO,ClO^5 + 6HCl = KCl + 6HO + 6Cl$, it follows that 20·41 of chlorate of potash would be sufficient to peroxidise 278 grains (2 equivalents) of protosulphate of iron, and would therefore represent 35·5 (1 equivalent) of chlorine, or 43·6 of peroxide of manganese.

The chlorate of potash test-liquor, therefore, is prepared by dissolving 20·41 of chlorate of potash in 1000 water-grains' measure of water. The solution is then poured carefully, drop by drop, from a glass alkalimeter through the tube funnel into the boiling hot solution containing the salt of iron. The whole of the chlorine which is disengaged is immediately absorbed by the protosulphate of iron, but as soon as the latter is completely peroxidised, the free chlorine which is evolved immediately reacts upon the colouring matter of a slip of paper, stained blue by sulphate of indigo, or litmus, previously placed by the operator between the cork and the neck of the flask, which piece of paper becoming bleached indicates that the operation is terminated. The operator then reads off the number of measures of the chlorate of potash test-liquor which have been employed to complete the peroxidisation of the protosulphate of iron.

Let us suppose that 50 divisions of the alkalimeter (500 water-grains' measures) have been employed; it is clear that half the quantity only of the protosulphate of iron employed has been converted into persulphate, and that consequently the quantity of the sample of manganese contained half its weight of valueless material; or, in other words, each measure of the test-solution of chlorate of potash employed to

Digitized by Google

complete the peroxidisation of the protosulphate represents 1 per cent. or 21·8 grains of useless matter contained in the 43·6 grains of the ore of manganese operated upon. The air should be excluded from the flask during the peroxidisation of the protosulphate of iron, else the oxygen of the air acting upon the salt of iron, would peroxidise a portion of it and vitiate the result. Instead of protosulphate, protochloride of iron may be used, for which purpose 56 grains (2 equivalents) of pianoforte wire should be put into a matras or flask as above mentioned, and about four fluid ounces of pure concentrated chlorhydric acid poured upon them. The flask being closed, as directed in the preceding process, with a cork provided with a funnel tube drawn to a point at the lower end, a gentle heat is then applied to promote the solution of the iron. When all the metal has dissolved, the operator introduces 43·6 grains of the peroxide of manganese under examination, previously reduced into fine powder and kept in readiness, weighed and folded up in a piece of paper; the flask is immediately closed with its cork, the liquor is slightly agitated and then brought to the boiling point. The chlorine disengaged by the manganese is completely absorbed by the protochloride of iron, the excess of which is determined by the chlorate of potash test-liquor precisely as explained just above.

By the methods which we have described the proportion of chlorine which a sample of manganese can evolve may be ascertained, but this alone is far from constituting the commercial value of the article as a source of chlorine, and it is not less important to determine the proportions of the other substances, such as peroxide of iron, earthy carbonates, &c., which are contained in the sample and which unprofitably consume a certain quantity of hydrochloric acid without evolving chlorine, and merely producing chlorides of iron, of calcium, of barium, &c. Hence the necessity of estimating not only the quantity of chlorine which a given weight of peroxide of manganese can yield but likewise the proportion of hydrochloric acid which is uselessly saturated by the foreign substances contained in the ore. For this purpose the following method which was first recommended by Gay-Lussac may be resorted to:— One equivalent, or 43·6 grains, of the peroxide of manganese under examination are treated by an excess of hydrochloric acid; for example, by 500 water-grain measures of chlorhydric acid of specific gravity 1·093, which quantity contains, according to Dr. Ure, 100 grains of real acid. The amount of chlorine corresponding to that of the pure manganese in the sample is then determined as mentioned before by means of protosulphate or protochloride of iron.

Since 43·6 grains (one equivalent) of pure peroxide of manganese require 74 grains (two equivalents) of pure chlorhydric acid to evolve 35·5 of chlorine, if we saturate the excess of chlorhydric acid employed by means of a solution of carbonate of soda, as in acidimetry, and thus determine the quantity of free acid, the difference will at once show what quantity of acid has been consumed both by the peroxide of manganese and by the foreign substances conjointly; but if we now subtract from that number the quantity consumed by the manganese, which will have been ascertained in the first part of the experiment, the remainder will of course represent the proportion which has been uselessly consumed by the impurities.

Taking a test solution of carbonate of soda of such a strength that 100 alkalimetrical divisions contain exactly 53 grains (one equivalent) of it, and are consequently capable of saturating exactly 36·5 grains (one equivalent) of pure chlorhydric acid, let us suppose that in order to saturate the excess of free acid left after the determination of the chlorine evolved by the manganese, it is found that 140 alkalimetrical divisions of the test solution of carbonate of soda just alluded to have been required. Since 100 alkalimetrical divisions or measures of carbonate of soda can saturate 36·5 grains of pure chlorhydric acid, the 140 divisions or measures employed represent therefore 51·1 grains of acid left in excess and in a free state, which being deducted from the 100 grains (contained in the 500 grain measures of acid of specific gravity 1·093 employed) leave 48·9 grains as the proportion of real acid consumed by the manganese and impurities of the sample. Let us suppose now that the 43·6 grains of manganese operated upon have been found in the first part of the experiment to contain only 21·8 grains, or 50 per cent. of peroxide of manganese as before mentioned; these will therefore have consumed 36·5 grains of chlorhydric acid, which being deducted from the 48·9 grains (the joint quantity of acid consumed by the acid and impurities), leave 12·4 as the proportion of pure chlorhydric acid wasted or uselessly taken up by the impurities alone, and therefore the 43·6 grains of peroxide of manganese operated upon consisted of

Pure peroxide of manganese - - - -	21·8	= 50 00
Impurities unprofitably consuming chlorhydric acid	12·4	= 28·44
Other impurities - - - - - - - -	9·4	= 21·56
	43·6	= 100·00

Digitized by Google

The amount of water contained in the sample may be separately estimated by exposing a given weight of it (100 grains, for example) in a capsule at a temperature of about 215° Fahr. until they no longer lose weight. The loss, of course, indicates the percentage of water.

Dr. Ure recommended a chlorometric apparatus represented in the fig. 458. Into the flask or phial C put 100 grains of the manganese to be tested, and into the globes, A, B, pour out of an alkalimetrical tube charged with 1000 grain measures of the above *equivalent* copperas solution, from 200 to 500 grain measures, according to the supposed quality of the manganese; then introduce through the funnel *d* some hydrochloric acid of known specific gravity (suppose 1·1), containing nearly 20 per cent. of chlorine, also from a charged alkalimetrical tube, and apply gentle heat to the bottom of the flask by placing it in a capsule of water standing over a spirit lamp. The chlorine evolved will rise up through the tube *f*, which passes merely beyond the cork, and will enter into the solution in B and A, converting it into red sulphate. Have ready some dry paper imbued with solution of red ferrocyanide of potassium (red prussiate of iron). Dip a slip of whalebone into the liquor in the globe A, through the funnel *e* (represented in the figure rather too high above the globe), and touch the paper with its point. As long as it forms a blue spot, some of the iron still exists as black oxide, and the process is to be urged by the addition of a little more hydrochloric acid to the manganese, as long as chlorine gas continues to be disengaged, and while it maintains the level of the liquor in A above that in B. Whenever the liquor, by the reaction of the chlorine, ceases to stain the test-paper blue, more of the solution from the graduated tube must be added till it begins to do so. By the cautious administration of the hydrochloric acid on the one hand, and of the copperas liquor on the other, the term of saturation will be arrived at in a few minutes. The manganese has then produced all the chlorine which it can yield. The number of water grain measures of the liquor, or degrees of its alkalimeter scale, being multiplied by 44, will give a product denoting the percentage of pure manganese present in the sample; or being multiplied by 36, a product which will denote the quantity of chlorine by weight which 100 grains of it can serve to generate.

458

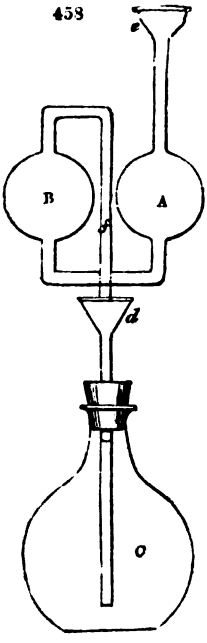

Since one atom of pure manganese (44 grains), in producing 36 grains of chlorine, consumes 2 atoms = 74 grains of hydrochloric acid, the quantity of this acid expended from the graduated tubes, beyond the due proportion of chlorine obtained, will show how much of the acid is unprofitably consumed by foreign substances in the manganese. In fact, every grain of chlorine should, with pyrolusite, be generated by an expenditure of little more than 2 grains of real muriatic acid, or 10 grains weight of the dilute acid, = about 9 grain measures of the graduated tube. Liquid hydrochloric acid of specific gravity 1·093 contains in 1000 grain measures exactly 200 grains of real acid. Hence 100 grains of pure pyrolusite should produce about 82 grains of chlorine, and consume about 169 of real muriatic acid = 845 grain measures of liquid acid, specific gravity 1·093. Instead of taking 100 grains of manganese as the testing dose, 10 or 20 grains may be taken, according to the dimensions of the apparatus and the exactness of the operator.

But if it be wished to obtain direct per centages of *manganese* by the graduated tubes without the trouble of reduction, then for a dose of 10 grains take a solution of fresh green copperas (free from adhering moisture), containing 632 grains in 10,000 grain measures. Proceed as above directed. If the manganese be a pure peroxide, 10 grains of it will generate as much chlorine as will peroxidise exactly 1000 grain measures, or 100 degrees by the test-tube of the copperas solution. But if the manganese contain only 40 or 50 per cent. of peroxide, then 40 or 50 centigrade measures of the said solution will be equivalent to the chlorine evolved from it by the reaction of hydrochloric acid.

If the object is on the other hand to obtain direct indications as to *chlorine*, then a test solution of copperas, containing 772 grains in 10,000 grain measures, will serve to show, by the peroxidisement of each 10 grain measures, or of one degree of the centesimal scale of the test tube, the reaction of one grain of chlorine available for bleaching, &c. in the chloride of lime or of soda, &c. The test solutions of copperas should be kept in well-corked bottles, containing a little powdered sulphuret of iron at

Digitized by Google

their bottom, which is to be shaken up occasionally in order to preserve the iron in the state of protoxide.

The manganese should always be treated with dilute nitric acid before submitting it to the above-described ordeal; and if it exhibits effervescence, 100 grains of it should be digested with the acid for a sufficient time to dissolve out all the carbonates present, then thrown upon a filter, washed and dried before weighing it for the testing operation. The loss of weight thereby sustained denotes the percentage of carbonates, and if calcareous it will measure the waste of acid that would ensue from that source alone, in using that manganese for the production of chlorine.

That manganese is most *chlorogenous* which contains no carbonates, the least proportion of oxide of iron, and of sesquioxide of manganese.

Another method of determining the commercial value of peroxide of manganese is that of Drs. Fresenius and Will. This method is grounded upon the fact that when peroxide of manganese is treated by oxalic acid, or oxalate of potash in presence of an excess of sulphuric acid, the result is sulphate of protoxide of manganese, carbonic acid being at the same time evolved, as shown by the following

Oxalic acid.

equation:—$MnO^2 + SO^3 + \widetilde{C^2O^3} = MnO,SO^3 + 2CO^2$. That is to say, one equivalent of peroxide of manganese, under the influence of sulphuric acid, parts with one equivalent of oxygen, which is transposed to the three equivalents of oxygen of the oxalic acid, thus forming two equivalents of carbonic acid, which escape in the state of gas, so that the loss of weight resulting from this escape of carbonic acid is, practically speaking, equal to the weight of peroxide of manganese.

The apparatus employed by Drs. Fresenius and Will is absolutely the same as that which we represented, *fig.* 35, in the article on ALKALIMETRY, and which we reproduce here, the *modus operandi* being as follows:

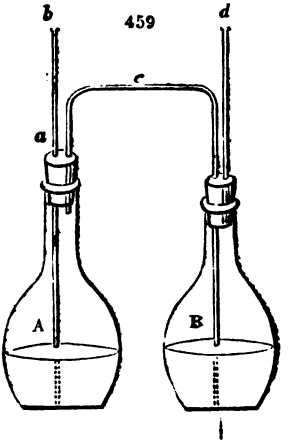

Into bottle A introduce 43·6 grains (one equivalent) of the manganese to be examined, previously well pulverised and levigated; and likewise 100 grains of neutral oxalate of potash, which may be prepared by saturating ordinary oxalate of potash with carbonate of potash, and evaporating to crystallisation. The neutral oxalate of potash should be pulverised. This being done, fill now bottle B with concentrated sulphuric acid to about one-third of its capacity. Cork flasks A and B up air-tight, and thus connect them into one twin-apparatus, and weigh the whole accurately. Close the opening *b* of the tube of bottle A with a small pellet of wax, and suck a little air at *d* so as to produce a vacuum in bottle A, and thus cause a little of the sulphuric acid of bottle B to pass into it. The oxygen of the manganese will then react upon the oxalic acid, which will be thereby converted into carbonic acid, which passing through the concentrated sulphuric acid in bottle B will be deprived of its moisture by it, and finally escape through the tube *d*. As soon as the disengagement of carbonic acid ceases, the operator should repeat the same manœuvre, that is to say, he should suck up again at *d*, in order to cause fresh portions of sulphuric acid to pass from bottle B into bottle A, and so on, until bubbles of gas are no longer disengaged. When the last portion of sulphuric acid thus sucked up fails in producing a disengagement of carbonic acid, the operator removes the little wax stopper, and again applying his lips to the tube *d*, sucks the air in order to sweep the carbonic acid from the apparatus, and replace it by common air, the suction being continued as long as a taste of carbonic acid is perceptible. When the apparatus, which has become very hot during the reaction of the sulphuric acid, has become cold, it is weighed again; the loss of weight indicates the amount of pure peroxide of manganese, each grain of carbonic acid representing very nearly one grain of peroxide of manganese.

In this mode of treatment, it is, of course, absolutely necessary to treat the manganese ore with dilute nitric acid, as mentioned at the beginning of this article, in order to remove any carbonate which might be present.

The economy of any sample of manganese in reference to its consumption of acid, in generating a given quantity of chlorine, may be ascertained also by the oxalic acid test:—44 grains of the pure peroxide, with 93 grains of neutral oxalate of potash, and 98 of oil of vitriol disengage 44 grains of carbonic acid, and afford a complete

Digitized by Google

neutral solution; because the one half of the sulphuric acid, = 49 grains, goes to form an atom of sulphate of manganese, and the other half to form an atom of sulphate of potash.

The deficiency in the weight of carbonic acid thrown off will show the deficiency of peroxide of manganese; the quantity of free sulphuric acid may be measured by a test-solution of bicarbonate of potash, and the quantity neutralised, compared to the carbonic gas produced, will show by the ratio of 98 to 44, the amount of acid unprofitably consumed.—A. N.

CHLOROFORM. When a mixture of chlorine and gaseous chloride of methyl is exposed to the sun's rays, chloroform is produced. It is prepared usually by distilling alcohol with chloride of lime. It is used to produce insensibility.

CHLOROPHANE. A name given to some of the varieties of fluor spar. See FLUOR SPAR.

CHOCOLATE. (Eng. and Germ.; *Chocolat*, Fr.) Is an alimentary preparation of very ancient use in Mexico, from which country it was introduced into Europe by the Spaniards in the year 1520, and by them long kept a secret from the rest of the world. Linnæus was so fond of it, that he gave the specific name, *theobroma*, food of the gods, to the cacao tree which produced it. The cacao-beans lie in a fruit somewhat like a cucumber, about 5 inches long and 3½ thick, which contains from 20 to 30 beans, arranged in 5 regular rows with partitions between, and which are surrounded with a rose-coloured spongy substance, like that of water melons. There are fruits, however, so large as to contain from 40 to 50 beans. Those grown in the West India islands, Berbice, and Demerara, are much smaller, and have only from 6 to 15; their development being less perfect than in South America. After the maturation of the fruit, when their green colour has changed to a dark yellow, they are plucked, opened, their beans cleared of the marrowy substance, and spread out to dry in the air. Like almonds, they are covered with a thin skin or husk. In the West Indies they are immediately packed up for the market when they are dried; but in the Caraccas they are subjected to a species of slight fermentation, by putting them into tubs or chests, covering them with boards or stones, and turning them over every morning, to equalise the operation. They emit a good deal of moisture, lose the natural bitterness and acrimony of their taste by this process, as well as some of their weight. Instead of wooden tubs, pits or trenches dug in the ground are sometimes had recourse to for curing the beans; an operation called *earthing* (*terrer*). They are lastly exposed to the sun and dried. The latter kind are reckoned the best, being larger, rougher, of a darker brown colour, and when roasted, throw off their husk readily, and split into several irregular fragments; they have an agreeable mild bitterish taste, without acrimony. The Guiana and West India sorts are smaller, flatter, smoother-skinned, lighter coloured, more sharp and bitter to the taste. They answer best for the extraction of the butter of cacao, but afford a less aromatic and agreeable chocolate. According to Lampadius, the kernels of the West India cacao beans contain, in 100 parts, besides water, 53·1 of fat or oil, 16·7 of an albuminous brown matter, which contains all the aroma of the bean, 10·91 of starch, 7¾ of gum or mucilage, 0·9 of lignine, and 2·01 of a reddish dye stuff, somewhat akin to the pigment of cochineal. The husks form 12 per cent. of the weight of the beans; they contain no fat, but, besides lignine, or woody fibre, which constitutes half their weight, they yield a light brown mucilaginous extract by boiling in water. The fatty matter is of the consistence of tallow, white, of a mild agreeable taste, called butter of cacao, and not apt to turn rancid by keeping. It melts only at 122° Fahr., and should, therefore, make tolerable candles. It is soluble in boiling alcohol, but precipitates in the cold. It is obtained by exposing the beans to strong pressure in canvass bags, after they have been steamed or soaked in boiling water for some time. From 5 to 6 ounces of butter may be thus obtained from a pound of cacao. It has a reddish tinge when first expressed, but it becomes white by boiling with water.

The beans, being freed from all spoiled and mouldy portions, are to be gently roasted over a fire in an iron cylinder, with holes in its ends for allowing the vapours to escape; the apparatus being similar to a coffee-roaster. When the aroma begins to be well developed, the roasting is known to be finished; and the beans must be turned out, cooled, and freed by fanning and sifting from their husks. The kernels are then to be converted into a paste by trituration in a mortar heated to 130° Fahr., or by the following ingenious and powerful machine. The chocolate paste has usually in France a little vanilla incorporated with it, and a considerable quantity of sugar, which varies from one-third of its weight to equal parts. For 1½ lbs. of cacao one pod of vanilla is sufficient. The roasted beans soon lose their flavour by exposure to the air.

Fig. 460 represents the chocolate mill. Upon the sole A, made of marble, six conical rollers B B are made to run by the revolution of the upright axis or shaft *q*, driven by the agency of the fly wheel E and bevel wheels I K. The sole A rests upon a strong iron plate, which is heated by a small stove, introduced at the

Digitized by Google

door H. The wooden framework F forms a ledge, a few inches high, round the marble slab, to confine the cocoa in the act of trituration. C is the hopper of the mill through which the roasted beans are introduced to the action of the rollers, passing

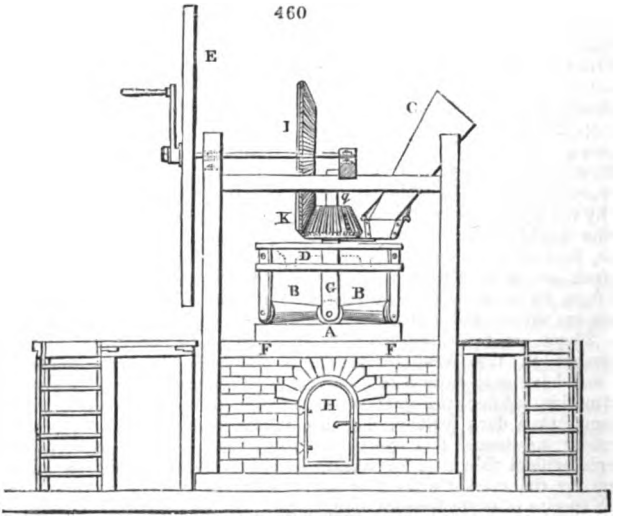

first into the flat vessel D, to be thence evenly distributed. After the cacao has received the first trituration, the paste is returned upon the slab, in order to be mixed with the proper quantity of sugar and vanilla, previously sliced and ground up with a little hard sugar. When the chocolate is sufficiently worked, and while it is thin with the heat and trituration, it must be put carefully into the proper moulds. If introduced too warm, it will be apt to become damp and dull on the surface; and, if too cold, it will not take the proper form. It must be previously well kneaded with the hands to insure the expulsion of every air bubble.

In Barcelona, chocolate mills on this construction are very common, but they are turned by a horse-gin set to work in the under story, corresponding to H in the above figure. The shaft G is, in this case, extended down through the marble slab, and is surrounded at its centre with a hoop to prevent the paste coming into contact with it. Each of these horse mills turns out about ten pounds of fine chocolate in the hour, from a slab two feet seven inches in diameter.

Chocolate is flavoured with cinnamon and cloves in several countries, instead of the more expensive vanilla. In roasting the beans the heat should be at first very slow, to give time to the humidity to escape; a quick fire hardens the surface, and injures the process. In putting the paste into the tin plate, or other moulds, it must be well shaken down, to insure its filling up all the cavities, and giving the sharp and polished impression so much admired by connoisseurs. Chocolate is sometimes adulterated with starch; in which case it will form a pasty consistenced mass when treated with boiling water. The harder the slab upon which the beans are triturated the better; and thence porphyry is far preferable to marble. The grinding rollers of the mill should be made of iron, and kept very clean.

Fig. 461 represents the chocolate mills at the victualling-yard, Deptford, as mounted by the celebrated engineers, Messrs. Rennie. There are four double mill-stones, A, B, C, D, each three feet in diameter, of which the nether rests upon a bed of cast-iron, like a drum-head, kept at the temperature of about 220° by the admission of steam to the case below. Over each mill there is a feeding hopper, 1, 2, 3, 4, in communication by the pipes 5, 6, 7, 8, with the general reservoir E, charged upon the floor above with cocoa through the funnel placed over it. The vertical shafts which turn these mills are marked F, G, H, L; they are moved by the train of bevel-wheels above, which are driven by an arm from the main shaft of the steam-engine. Each mill can, of course, be thrown in and out of gear at pleasure. At I, I, I, I, the discharge-spout is shown, which pours out the semi-fluid hot chocolate into shallow cylindrical tin pans, capable of containing about nine pounds of chocolate each. These four mills are capable of converting upwards of a ton of cocoa into good chocolate in a day, on the system of double trituration.

Digitized by Google

461

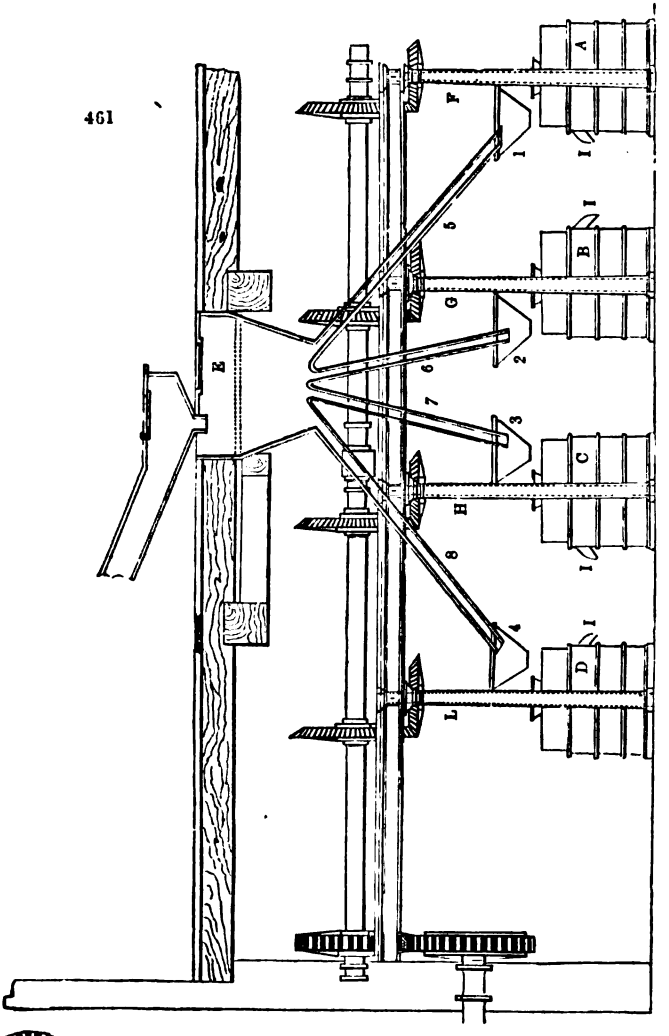

462

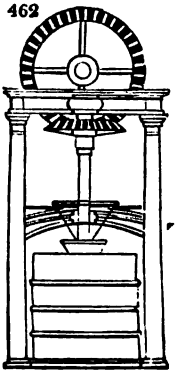

Fig. 462 is an end view of one of the chocolate mills, with its mitre-gearing.

Our *importations* of chocolate or cocoa paste, were in 1864 as follows:—

From Holland, 4,931 lbs., valued at 309*l.*; from France, 127,757 lbs., valued at 7,986*l.*; and from other parts, 8,687 lbs, valued at 542*l.*; making a total of 141,375 lbs., valued at 8,837*l.*

CHROMASCOPE. An instrument for showing colours.

CHROMATES, saline compounds of chromic acid with bases. See CHROMIUM and CHROMIC ACID.

CHROMATES OF POTASH. (For the preparation of these salts refer to CHROME IRON.) *Bichromate of potash*, by slow cooling, may be obtained in the form of square tables, with bevelled edges, or flat, four-sided prisms. They are permanent in the air, have a metallic and bitter taste, and dissolve in about one-tenth of their weight of water at 60° F., but in one half of their weight of boiling water. The composition of bichromate of potash is

Digitized by Google

Potash - - - - - - -	31·6
Chromic acid - - - - - -	68·4
	100·0

That of the neutral *Chromate of Potash* is

Potash - - - - - - -	48·0
Chromic acid - - - - - -	52·0
	100·0

These salts are much employed in CALICO PRINTING and in DYEING, which see.

The value of a solution of chromate of potash, if it be tolerably pure, may be inferred from its specific gravity by the following table:—

At specific gravity		1·28	it contains about		50	per cent of the salt.	
,,	,,	1·21	,,	,,	33	,,	,,
,,	,,	1·18	,,	,,	25	,,	,,
,,	,,	1·15	,,	,,	20	,,	,,
,,	,,	1·12	,,	,,	16	,,	,,
,,	,,	1·11	,,	,,	14	,,	,,
,,	,,	1·10	,,	,,	12	,,	,,

In making the red bichromate of potash from these solutions of the yellow salt, nitric acid was at first chiefly used: but in consequence of its relatively high price, sulphuric, muriatic, or acetic acid has been frequently substituted upon the large scale.

Chromate of Potash, adulteration of, to detect.—The chromate of potash has the power of combining with other salts up to a certain extent without any very sensible change in its form and appearance; and hence it has been sent into the market falsified by very considerable quantities of sulphate and muriate of potash, the presence of which has often escaped observation, to the great loss of the dyers who use it so extensively. The following test process has been devised by M. Zuber, of Mülhouse. Add a large excess of tartaric acid to the chromate in question, which will decompose it, and produce in a few minutes a deep amethyst colour The supernatant liquor will, if the chromate be pure, afford now no precipitate with the nitrates of barytes or silver; whence the absence of the sulphates and muriates may be inferred. We must, however, use dilute solutions of the chromate and acid, lest bitartrate of potash be precipitated, which will take place if less than 60 parts of water be employed. Nor must we test the liquid till the decomposition be complete, and till the colour verge rather towards the green than the yellow. Eight parts of tartaric acid should be added to one of chromate to obtain a sure and rapid result. If nitrate of potash (saltpetre) is the adulterating ingredient, it may be detected by throwing it on burning coals, when deflagration will ensue. The green colour is a certain mark of the transformation of the chromic acid partially into the chrome oxide; which is effected equally by the sulphurous acid and sulphuretted hydrogen. Here this metallic acid is disoxygenated by the tartaric, as has been long known. The tests which I should prefer are the nitrates of silver and baryta, having previously added so much nitric acid to the solution of the suspected chromate, as to prevent the precipitation of the chromate of silver or baryta. The smallest adulteration by sulphates or muriates will thus be detected.

A mixture of sulphate of soda and chloride of sodium tinged with strong solution of chromium is sometimes sold for pure bichromate of potash.—H. M. N.

CHROMATE OF LEAD, the chrome yellow of the painter, is a rich pigment of various shades, from deep orange to the palest canary yellow. It is made by adding a limpid solution of the neutral chromate of potash, to a solution equally limpid of acetate or nitrate of lead. A precipitate falls which must be well washed and carefully dried out of the reach of any sulphuretted vapours. A lighter shade of yellow is obtained by mixing some solution of alum or sulphuric acid with the chromate before pouring it into the solution of lead; and an orange tint is to be procured by the addition of subacetate of lead in any desired proportions.

It was ascertained by MM. Riot and Delisse, that the proportion of chromic acid in chromate of lead may be much diminished without any injury to the colour, and that the same colour is produced with 25 parts of neutral chromate for 100 of chrome yellow, as when 54 parts are used. They give the following formula for the preparation of this pigment. Acetate of lead is dissolved in water, and sulphuric acid in

Digitized by Google

quantity necessary to convert the oxide of lead into sulphate is added. The clear liquid contains acetic acid and may be drawn off, and preserved for the preparation of fresh acetate of lead. The sulphate of lead is washed and treated with a hot solution of neutral chromate of potash, 25 parts being used for every 75 parts of sulphate of lead. The liquid then contains sulphate of potash which may be made available, and the precipitate consists of chromate of sulphate of lead.

To prepare chrome red, Rungé directs an intimate mixture to be made of 448 lbs. of litharge, 60 lbs. of common salt, and 500 lbs. of water. As soon as the mass becomes white and swells up considerably, more water is added to prevent it from becoming too hard. After four or five days, the mass becomes a compound of chloride and hydrated oxide of lead. Without separating the mother liquor, which contains undecomposed chloride of sodium and soda, 150 lbs. of powdered bichromate of potash are to be added, and the whole well stirred together, and finally washed.

Liebig and Wöhler have lately contrived a process for producing a subchromate of lead of a beautiful vermilion hue. Into saltpetre, brought to fusion in a crucible at a gentle heat, pure chrome yellow is to be thrown by small portions at a time. A strong ebullition takes place at each addition, and the mass becomes black, and continues so while it is hot. The chrome yellow is to be added till little of the saltpetre remains undecomposed, care being taken not to overheat the crucible, lest the colour of the mixture should become brown. Having allowed it to settle for a few minutes, during which the dense basic salt falls to the bottom, the fluid part, consisting of chromate of potash and saltpetre is to be poured off, and it can be employed again in preparing chrome yellow. The mass remaining in the crucible is to be washed with water, and the chrome red being separated from the other matters, it is to be dried after proper edulcoration. It is essential for the beauty of the colour, that the saline solution should not stand long over the red powder, because the colour is thus apt to become of a dull orange hue. The fine crystalline powder subsides so quickly to the bottom after every ablution, that the above precaution may be easily observed.

CHROMATYPE. A photographic process. See PHOTOGRAPHY.

CHROMATYPOGRAPHY. A French process for printing letter-press in colours.

CHROME IRON. The only ore of chromium which occurs in sufficient abundance for the purposes of art, is the octohedral chrome ore, commonly called chromate of iron, though it is rather a compound of the oxides of chromium and iron. The fracture of this mineral is imperfect conchoidal, or uneven. Hardness = 5·5; specific gravity 4·4 to 4·5; but the usual chrome ore found in the market varies from 3 to 4. Its lustre is semi-metallic or resinous; colour, iron or brownish black; streak, yellowish to reddish brown. It is sometimes magnetic. Before the blowpipe it is infusible alone, but in borax it is slowly soluble, forming a beautiful emerald green bead: fused with nitre it forms a yellow solution in water.

Chrome ore was first discovered in the Var department in France; it is also found in Saxony, Silesia, Bohemia, and Styria; in Norway at Röraas: in the Ural near Katherinenberg; in the United States at the Barehills near Baltimore, Chester in Massachusets, and Hoboken in New Jersey. In Scotland it is found in the parishes of Kildrum and Towie in Aberdeenshire; in the limestone near Portsoy in Banffshire; near Ben Lawes in Perthshire, and at Buchanan in Stirlingshire. It occurs massive and in considerable quantity at Swinaness, and Haroldswick in Unst, one of the Shetlands; also in Fetlar and in other of the smaller Shetland Islands.

Composition of Chrome Iron Ores.

	1.	2.	3.	4.	5.
Sesquioxide of Chromium - -	36·0	54·08	39·51	60·04	43·00
Protoxide of Iron - - -	37·0	25·66	36·00	20·13	34·70
Alumina - - - - - -	21·5	9·02	13·00	11·85	20·30
Magnesia - - - - - -	- -	5·36	- -	7·45	- -
Silica - - - - - - -	5·0	4·83	10·60	- -	2·00
	99·5	98·95	99·11	99·47	100·00

(1) from St. Domingo, analysed by Berthier; (2) from Röraas, in Norway, analysed by Von Kobell; (3) from Baltimore, analysed by Seybert; (4) crystallised, from Baltimore, analysed by Abich; (5) analysed by Klaproth.

The chief application of this ore is to the production of Chromate of Potash, from which salt the various other preparations of this metal used in the arts are obtained.

Digitized by Google

Treatment of the Ore. According to the old method it is reduced to a fine powder. by being ground in a mill under ponderous edge wheels, and sifted. It is then mixed with one third or one half its weight of coarsely bruised nitre, and exposed to a powerful heat for several hours, on a reverberatory hearth, where it is stirred about occasionally. In the large manufactories of this country, the ignition of the above mixture in pots is laid aside as too operose and expensive. The calcined matter is raked out and lixiviated with water. The bright yellow solution is then evaporated briskly and the chromate of potash falls down in the form of a granular salt, which is lifted out from time to time from the bottom with a large ladle, perforated with small holes, and thrown into a draining box. The saline powder may be formed into regular crystals of neutral *Chromate of Potash*, by solution in water and slow evaporation: or it may be converted into a more beautiful crystalline body, the *bichromate of potash*, by treating its concentrated solution with nitric, muriatic, sulphuric, or acetic acid, or indeed any acid exercising a stronger affinity for the second atom of the potash, than the chromic acid does.

The first great improvement in this manufacture was the dispensing with nitre, and oxidising entirely by means of air admitted into the reverberatory furnace, in which the ore mixed with carbonate of potash is calcined. Stromeyer afterwards suggested the addition of lime, by which the oxidation was much quickened, and Mr. Charles Watt substituted the sulphates of potash and soda for the nitrates of those alkalies. The sulphate was first intimately mixed with the ground ore, and then the lime well incorporated with the mixture, which was heated to bright redness, for four hours with frequent stirring.

In 1847 Mr. Tighman obtained a patent for the use of felspar in the manufacture of certain alkaline salts, and amongst them of chromate of potash: he directs 4 parts by weight of felspar, 4 parts of lime, or an equivalent quantity of carbonate of lime, and one part of chromic ore, all in fine powder, to be intimately mixed together, and kept at a bright red heat for from 18 to 20 hours in a reverberatory furnace, the mixture being turned over frequently, so that all parts may be exposed equally to heat and air; the temperature is not to rise high enough to cause even incipient fusion, and the charge should be kept in a porous state; when, on being examined, the charge is found to contain the proper quantity of alkaline chromate, it is withdrawn from the furnace and lixiviated with water.

Some manufacturers mix the powdered ore with an equal weight of common salt, muriate of potash, or hydrate of lime, and expose the mixture to a full red heat, passing over it while in fusion highly heated steam, and stirring it every 10 or 15 minutes; the hydrochloric acid and iron escape in the form of sesquichloride of iron.

In treating chromium (chromate of iron), the ore is pulverised and mixed with common salt, muriate of potash, or hydrate of lime, and exposed in a reverberatory furnace to a red or even a white heat, the mixture being stirred every ten or fifteen minutes, and steam at a very elevated temperature introduced during the operation, until the desired effect is obtained, which may be ascertained by withdrawing a portion from the furnace and testing it, as customary. The products of this operation are finally treated in the manner usual for the chromic and bichromic salts.

The mixture of chromium and common salt produces chromate of soda, the greater portion, or perhaps all of the iron contained in the chromium being absorbed by the hydrochloric acid evolved from the salt, and carried off in the form of sesquichloride of iron. From the first mixture is manufactured pure bichromate of soda, which, by the addition of hydrochloric acid, may be converted to chlorochromate; and from the last, or lime mixture, is produced a chromate of that earth, from which, by the addition of soda or potash, there may be obtained a compound salt, which, with those previously mentioned, may be advantageously employed.

M. Jacquelin first prepares chromate of lime by calcining at a bright red heat in a reverberatory furnace, for 9 or 10 hours, an intimate mixture of chalk and chrome ore. The friable and porous mass is then crushed, suspended in water, and sulphuric acid added until the liquid slightly reddens blue litmus paper; the chromate of lime is hereby converted into bichromate; chalk is now added, until the whole of the sesquioxide of iron is precipitated, and the clear liquid, which now contains only bichromate of lime and a little sulphate, may be used for the preparation of the insoluble chromates of lead, zinc, baryta, &c., by mixing it with the acetates or chlorides of these metals. To prepare bichromate of potash, the bichromate of lime is mixed with solution of carbonate of potash, which gives rise to insoluble carbonate of lime, which is easily washed, and a solution of bichromate of potash which is concentrated and set aside to crystallise.

Mr. Booth (patent sealed Nov. 9th, 1852) mixes powdered chrome ore with one-fifth of its weight of powdered charcoal, and heats it on the hearth of a reverberatory

Digitized by Google

furnace, protecting it carefully from the air. The ore is by this means decomposed, and the iron reduced to the metallic state, and is dissolved out by dilute sulphuric acid; the residue is washed and dried, and afterwards mixed with carbonate of potash and saltpetre, and heated in the same manner that the chrome ore itself is heated in the process usually employed. The solution of sulphate of iron is evaporated to crystallisation so as to produce copperas in a state adapted for commerce.

Analysis of Chrome Iron Ore.—Various methods have been proposed. The following, suggested by Mr. T. S. Hunt, gives accurate results:—The ore, finely levigated in an agate mortar, is mixed with 10 or 12 times its weight of fused bisulphate of potash, and preserved at a gentle heat for about half an hour. The fused mass is extracted with hot water, and boiled for a few minutes with excess of carbonate of soda; the precipitate is dried and fused with five times its weight of a mixture of equal parts of nitre and carbonate of soda, in a platinum or silver crucible. The mixture is kept in fusion for 10 or 15 minutes, and when cold is extracted with water. The alkaline chromate thus obtained may be precipitated by a salt of lead, or it may be supersaturated by hydrochloric acid, and boiled with alcohol, by which it is converted into chloride of chromium, from which the oxide is to be precipitated by adding ammonia in excess and boiling for a few minutes. Chrome iron ore is so difficult of decomposition, that the method of fusing it at once with nitre and an alkaline carbonate frequently fails in oxidising the whole of the chromium into chromic acid.

Mr. Calvert mixes the well pulverised ore with three or four times its weight of a mixture made by slaking quicklime with caustic soda, and then dries and calcines the mass. He then adds one-fourth part of nitrate of soda, and calcines for two hours more, by which time he finds the whole of the chromium is converted into chromic acid. Another process, which Mr. Calvert finds to produce good results, consists in calcining the pulverised chrome ore with nitrate of baryta, adding a little caustic potash from time to time towards the end of the process.—H. M. N.

CHROMIC ACID. There are several methods of preparing this acid, the simplest consists in decomposing bichromate of potash by oil of vitriol:—1. An excess of oil of vitriol is mixed with a warm solution of bichromate of potash, the liquid is poured off from the chromic acid, which separates in small red crystals; the crystals are drained in a funnel having its stem partly filled with coarsely pounded glass, and are afterwards dried on a porous tile under a bell glass: 2. Mr. Warrington mixes 10 measures of a cold saturated solution of bichromate of potash with from 12 to 15 measures of oil of vitriol free from lead, and presses the red acicular crystals which separate as the liquid cools, between porous stones. If it be desired to remove the last traces of sulphuric acid, the crystals should be redissolved in water, and a solution of bichromate of baryta should be added in quantity just sufficient to throw down the whole of the sulphuric acid as sulphate of baryta; the solution may be recrystallised by evaporation in vacuo. 3. Meissner prepares the acid direct from chromate of baryta by digesting that salt with a quantity of dilute sulphuric acid, not sufficient for complete saturation: the solution which contains chromic acid and acid chromate of baryta is precipitated by the exact amount of sulphuric acid required, so that the solution is neither affected by sulphuric acid, nor by a salt of baryta: it is then evaporated to dryness.

Chromic acid is obtained in quadrangular crystals, of a deep red colour; it has a very acrid and styptic taste. It reddens powerfully litmus paper. It is deliquescent in the air. When heated to redness, it emits oxygen and passes into the deutoxide. When a little of it is fused along with vitreous borax, the compound assumes an emerald green colour.

As chromic acid parts with its last dose of oxygen very easily, it is capable in certain styles of calico printing of becoming a valuable substitute for chlorine where this more powerful substance would not from peculiar circumstances be admissible. For this ingenious application, the arts are indebted to that truly scientific manufacturer, M. Daniel Kœchlin, of Mülhouse. He discovered that whenever chromate of potash has its acid set free by its being mixed with tartaric or oxalic acid, or a neutral vegetable substance (starch or sugar for example), and a mineral acid, a very lively action is produced, with disengagement of heat, and of several gases. The result of this decomposition is the active reagent chromic acid, possessing valuable properties to the printer. Watery solutions of chromate of potash and tartaric acid being mixed, an effervescence is produced which has the power of destroying vegetable colours. But this power lasts no longer than the effervescence. The mineral acids react upon the chromate of potash only when vegetable colouring matter, gum, starch, or a vegetable acid, are present to determine the disengagement of gas. During this curious change carbonic acid is evolved; and when it takes place in a retort, there is condensed in the receiver a colourless liquid, slightly acid, exhaling somewhat of the smell of vinegar, and containing a little empyreumatic oil. This liquid heated with

Digitized by Google

the nitrates of mercury or silver reduces these metals. On these principles M. Kœchlin discharged indigo blue by passing the cloth through a solution of chromate of potash, and printing nitric acid thickened with gum upon certain spots. It is probable that the employment of chromic acid would supersede the necessity of having recourse in many cases to the more corrosive chlorine.—H. M. N.

CHROMIUM. The metallic base of the oxide of chromium. It may be obtained by exposing to a very high temperature, in a crucible lined with charcoal, an intimate mixture of sesquioxide of chromium and charcoal. The spongy mass obtained is powdered in an iron mortar, and mixed with a little more sesquioxide of chromium (to oxidise as much as possible of the carbon); it is then again exposed in a porcelain crucible to a very high temperature, when a coherent metal is obtained. This metal is greyish in colour, hard, and brittle, and is magnetic at low temperatures. It has received no practical applications.

CHROMIUM, OXIDE OF. The green oxide of chromium has come so extensively into use as an enamel colour for porcelain, that a fuller account of the best modes of manufacturing it must prove acceptable to many of our readers.

That oxide, in combination with water, called the hydrate, may be economically prepared by boiling chromate of potash, dissolved in water, with half its weight of flowers of sulphur, till the resulting green precipitate ceases to increase, which may be easily ascertained by filtering a little of the mixture. The addition of some potash accelerates the operation. This consists in combining the sulphur with the oxygen of the chromic acid, so as to form sulphuric acid, which unites with the potash of the chromate into sulphate of potash, while the chrome oxide becomes a hydrate. An extra quantity of potash facilitates the deoxidisement of the chromic acid by the formation of hyposulphite and sulphuret of potash, both of which have a strong attraction for oxygen. For this purpose the clear lixivium of the chromate of potash is sufficiently pure, though it should hold some alumina and silica in solution, as it generally does. The hydrate may be freed from particles of sulphur by heating dilute sulphuric acid upon it, which dissolves it; after which it may be precipitated, in the state of a carbonate, by carbonate of potash, not added in excess.

By calcining a mixture of bichromate of potash and sulphur in a crucible, chromic acid is also decomposed, and a hydrated oxide may also be obtained; the sulphur being partly converted into sulphuret of potassium, and partly into sulphuric acid (at the expense of the chromic acid), which combines with the rest of the potash into a sulphate. By careful lixiviation, these two new compounds may be washed away, and the chrome green may be freed from the remaining sulphur, by a slight heat.

Another method of preparing green oxide of chromium, is to mix intimately 45 parts of gunpowder with 240 parts of perfectly dry chromate of potash, and 35 parts of hydrochlorate of ammonia (sal ammoniac), reduce to powder, and pass through a fine sieve; fill a conical glass or other mould with this powder, gently pressed, and invert so as to leave the powder on a porcelain slab of any kind. When set on fire at its apex with a lighted match, it will burn down to the bottom with brilliant coruscations. The black residuum, being elutriated with warm water, affords a fine bright green oxide of chromium.

Preparation of Green Oxide of Chromium for calico-printing.—The following directions are given by De Kerrur. At the commencement of the process the green hydrate of the oxide of chromium is first prepared by dissolving 4 kilogrammes of bichromate of potash in 22 litres (39 pints) of boiling water. Then into a boiler or vessel containing 108 litres (24 gallons) of boiling water, 4 or 5 kilogrammes (8 or 10 lbs.) of pulverised white arsenic are thrown, and boiled for 10 minutes: a precipitate will be formed, and must be allowed to settle: the clear liquor is then run off, and immediately mixed with the solution of bichromate of potash, stirring all the time: in a short time the mixture acquires a green tint, and the hydrated oxide of chromium will be formed and precipitated. After being several times well stirred, and allowed to cool, the whole is thrown upon a filter of white wool, and the hydrate of chromium remaining on the filter is carefully washed with boiling water. It is then dried, and ready to be employed for the preparation of the chloride. In order to obtain that salt, hydrochloric acid of 22° Beaumé is diluted with water, until the acid no longer gives off vapour. It is then heated, and whilst hot, as much of the hydrated oxide of chromium, prepared as above, is added as will saturate the acid and leave a slight excess of the oxide undissolved. The whole is then left to settle, and the clear liquor is decanted from the dissolved matter. In this state the solution of chloride of chromium still presents some traces of free acid, which would act injuriously upon the fibres of the cotton. To remove this, and to obtain the product in a neutral state, potash ley (marking 36° Beaumé) is poured in very gradually, until the oxide of chromium begins to be precipitated. The solution of chloride of chromium thus prepared, and which is of a dark green colour, is evaporated until it marks 46° Beaumé; after

Digitized by Google

cooling, oxide of chromium of the finest green colour is obtained. This preparation is sold under the name of Sea-green.

This oxide may also be prepared by decomposing, with heat, the chromate of mercury, a salt made by adding to nitrate of protoxide of mercury, chromate of potash, in equivalent proportions. This chromate has a fine cinnabar red, when pure; and, at a dull red heat, parts with a portion of its oxygen and its mercurial oxide. From M. Dulong's experiments it would appear that the purest chromate of mercury is not the best adapted for preparing the oxide of chrome to be used in porcelain painting. He thinks it ought to contain a little oxide of manganese and chromate of potash to afford a green colour of a fine tint, especially for pieces that are to receive a powerful heat. Pure oxide of chrome preserves its colour well enough in a muffle furnace; but, under a stronger fire, it takes a dead-leaf colour.—H. M. N.

CHROMIUM, BLUE OXIDE OF. The following directions have been given for the preparation of a *blue oxide* of chromium. The concentrated alkaline solution of chromate of potash is to be saturated with weak sulphuric acid, and then to every 8 lbs. is to be added 1 lb. of common salt, and half a pound of concentrated sulphuric acid; the liquid will now acquire a green colour. To be certain that the yellow colour is totally destroyed, a small quantity of the liquor is to have potash added to it, and filtered; if the fluid is still yellow, a fresh portion of salt and of sulphuric acid is to be added: the fluid is then to be evaporated to dryness, redissolved, and filtered; the oxide of chrome is finally to be precipitated by caustic potash. It will be of a greenish-blue colour, and being washed, must be collected upon a filter.—H. M. N.

CHRYSANILINE. See ANILINE YELLOW.

CHRYSENE. A brilliant yellow substance, contained in the least volatile portions of coal tar. It crystallises in spangles like iodide of lead. Its best solvent for the purpose of crystallisation is Boghead naphtha.—C. G. W.

CHRYSOBERYL, or GOLDEN BERYL, is composed of alumina 80·2 and glucina 19·8 = 100. It is of various shades of yellowish and light green, sometimes with a bluish opalescence internally. It has a vitreous lustre, and varies from translucent to transparent. Fracture, conchoidal, or uneven. Specific gravity = 3·5 to 3·8. It belongs to the trimetric system.

This stone, when transparent, furnishes a beautiful gem of a yellowish-green colour, which is cut with facets, unless it be opalescent, in which case it is cut *en cabochon*. It occurs in the Brazils and Ceylon, in rolled pebbles in the alluvial deposits of rivers; in the Ural, in mica-slate; and at Haddam, Connecticut, U.S., in granite, traversing gneiss.—H. W. B.

CHRYSOCOLLA. The Greeks gave this name to borax. It is now applied to the silicate of copper, a mineral with the composition of silica 34·3, oxide of copper 45·2, water 20·5. It is often mixed with carbonate and oxide of copper. It is found in Chili, the Lake Superior district, in the copper mines of South Australia, and the West Indian islands; also in Cornwall, Saxony, and indeed in most localities where copper mines occur. Bischof observes, that silicate of copper may be formed through the action of an alkaline, lime or magnesia silicate, on sulphate or nitrate of copper in solution. He also shows that this silicate is decomposed by carbonated waters, producing carbonate of copper. In nature the alkaline silicates are often furnished by the decomposing granite, and the sulphate of copper by the changes which constantly occur in copper pyrites.

CHRYSOLITE or PERIDOT. The name given to the paler and more transparent crystals of olivine, the latter name being restricted to imbedded masses or grains of inferior colour and clearness. It is usually found in angular or rolled pieces, rarely crystallised. The crystals (generally, 8, 10, or 12-sided prisms) are variously terminated, and often so compressed as to become almost tabular. They are generally very fragile, and therefore unfit for ornamental purposes. Oriental chrysolite is composed of silica 39·73, magnesia 50·13, protoxide of iron 9·19, alumina 0·22, protoxide of manganese 0·09, oxide of nickel 0·32 = 99·68.—*Stromeyer*.

As a gem, chrysolite is deficient in hardness and play of colour; but when the stones are large and of good colour, and well cut and polished, it is made into necklaces, &c., with good effect. From its softness, which is little less than that of glass, it requires to be worn with care, or it will lose its polish. The best mode of displaying the colours to the greatest advantage is to cut it in small steps. To give it the highest polish, a copper wheel is used, on which a little sulphuric acid is dropped. During the process a highly suffocating smell is given out, produced, probably, by the oxidation of the copper and the decomposition of the acid. Chrysolite is supposed to have been the topaz of the ancients. It is found near Constantinople; at Vesuvius; and

Digitized by Google

the Isle of Bourbon, at Real del Monte; in Mexico; in Egypt; and at Expailly, in Auvergne.—H. W. B.

CHRYSOPRASE. An apple-green or leek-green variety of chalcedony, the colour of which is caused by the presence of nickel. It occurs at Kosemeitz, in Silesia, and Belmont's lead mine, St. Lawrence County, New York.

This stone was probably the chrysoberyl of the ancients.—H. W. B.

CHUNAM. A cement made of shell lime and sea sand, commonly used in India.

CICHORIUM ITYBUS. See CHICORY.

CIDER. See CYDER.

CIMOLIAN EARTH. *Cimolite* (*Cimolia*, Pliny). This earth is found in the island of Argentiers, the ancient Cimolus, in Bohemia, and some parts of Russia. It has been frequently confounded with fuller's earth, because it has been used for the same purposes—removing grease from silk or woollen fabrics. It is an aluminous silicate, consisting of silica 63, alumina 23, oxide of iron 1·25, water 12. It absorbs water rapidly, and splits into thin lamina. Powdered and mixed with water it forms a creamy mass, which absorbs oil from any fabric over which it may be spread.

CINCHONA BARK. See PERUVIAN BARK.

CINCHONICINE. $C^{40}H^{24}N^2O^2$. An alkaloid isomeric with cinchonine and cinchonidine. It is produced by the action of heat on any of the saline combinations of cinchonine.—*Pasteur.*

CINCHONIDINE. $C^{40}H^{24}N^2O^2$. This alkaloid, the quinidine of Leers, is one of the isomers of cinchonine.

CINCHONINE. $C^{40}H^{24}N^2O^2$. An alkaloid or organic base accompanying quinine. Some of the differences of properties on which processes for their separation may be founded are the following. Cinchonine crystallises more readily than quinine from an alcoholic solution, in consequence of its being less soluble in that fluid. Sulphate of quinine, on the other hand, is less soluble than sulphate of cinchonine. Cinchonine is insoluble, while quinine is freely soluble in ether. See Watts' "Dictionary of Chemistry."

CINDER. The slags produced in the processes of iron manufacture.

CINDER BED. A bed of oyster-shells; found in the Middle Purbeck series.

CINDER FLUE. See IRON.

CINDER IRON. See IRON.

CINDER TAP. See IRON.

CINNABAR is the principal and only valuable ore of the mercury of commerce, which is prepared from it by sublimation.

It is a sulphide (*sulphuret*) of mercury, composed, when pure, of quicksilver 86·2, sulphur 13·8, in which case it is a natural vermilion, and identical with the vermilion of commerce; but it is sometimes rendered impure by an admixture of clay, bitumen, oxide of iron, &c. Cinnabar is of a cochineal-red colour, often incliuing to brownish-red, and lead-grey, with an adamantine lustre, approaching to metallic in dark varieties, and to dull in friable ones. It varies from sub-transparent to opaque, has a scarlet streak, and breaks with a sub-conchoidal uneven fracture. H=2 to 2·5, specific gravity =8·99. In a matrass it entirely sublimes, and with soda yields mercury with the evolution of sulphurous fumes. When crystallised, it belongs to the rhombohedral system.

Cinnabar occurs in beds in slate-rocks. The chief European beds are at Almaden near Cordova, in Spain, and at Idria in Upper Carinthia, where it usually occurs in a massive form, and is worked on a thick vein belonging to the Alpine carboniferous strata. It also occurs abundantly in China, Japan, Fluanca Vilica in South Peru, and at New Almaden in California, in a mountain east of San José, between the Bay of Francisco and Monterey, where it is very abundant, and easy of access. The chief source of the mercury used in England, is Spain. Our recent *imports* have been as follows: Cinnabar native, in 1863, 13 cwts., computed real value 146*l.*; and in 1864, 14 cwts., computed real value 157*l.*

Cinnabar in the arts is used as a pigment, in the state of a fine powder, which is known by the name of vermilion. See MERCURY and VERMILION.—H. W. B.

CINNAMON. (*Cannelle*, Fr.; *Zimmt*, Germ.) The inner bark of the *Laurus cinnamomum*, used chiefly for flavouring cordials. Cinnamon yields an exquisite essential oil by distillation which has considerable use in medicine and perfumery.

Imports:—

	1863, lbs.	Computed real value.	1864. lbs.	Computed real value.
From Ceylon - - -	874,704	£72,892	596,769	£61,482
Other parts - -	38,751	485	7,729	114
Japan - - - - -		- -	24,504	306
Madras - - - - -		- -	16,512	206
	913,455	73,377	645,514	62,108

Digitized by Google

CINNAMON STONE. A name given to one of the varieties of the lime garnets.

CITRIC ACID. (*Acide citrique*, Fr.; *Citronensaure*, Germ.) This acid exists in the juices of fruits, especially the lemon, orange, currant, and quince. It was first procured from lemon juice in a pure state by Scheele, who adopted the following process. Lemon juice was put into a large tub, and saturated with dry chalk in fine powder, noting carefully the quantity employed. The citrate of lime which precipitates being freed from the supernatant liquor is to be well washed with repeated affusion and decantation of water. For every ten pounds of chalk employed, nine and a half pounds of sulpuric acid diluted with six times its weight of water are to be poured while warm upon the citrate of lime, and well mixed with it. At the end of twelve hours, or even sooner, the citrate will be all decomposed, dilute citric acid will float above, and sulphate of lime will be found at the bottom. The acid being drawn off, the calcareous sulphate must be thrown on a canvas filter, drained, and then washed with water to abstract the whole acid.

The citric acid thus obtained may be evaporated in leaden pans, over a naked fire, till it acquires the specific gravity 1·13; after which it must be transferred into another vessel, evaporated by a steam or water bath till it assumes a syrupy aspect, when a pellicle appears first in patches, and then over the whole surface. This point must be watched with great circumspection, for if it be passed, the whole acid runs a risk of being spoiled by carbonisation. The steam or hot water, must be instantly withdrawn and the concentrated acid put into a crystallising vessel in a dry, but not very cold apartment. At the end of four days the crystallisation will be complete. The crystals must be drained, re-dissolved in a small portion of water, the solution set aside to settle its impurities, then decanted, re-evaporated, and re-crystallised. A third or fourth crystallisation may be necessary to obtain a colourless acid.

If any citrate of lime be left undecomposed by the sulphuric acid, it will dissolve in the citric acid, and obstruct its crystallisation, and hence it will be safer to use the slightest excess of sulphuric acid than to leave any citrate undecomposed. There should not however be any great excess of sulphuric acid. If there be, it is easily detected by nitrate of barytes, but not by the acetate of lead as prescribed by some chemical authors; because the citrate of lead is not very soluble in the nitric acid, and might thus be confounded with the sulphate, whereas citrate of barytes is perfectly soluble in that test acid. Sometimes a little nitric acid is added with advantage to the solution of the coloured crystals, with the effect of whitening them.

Twenty gallons of good lemon juice will afford fully ten pounds of white crystals of citric acid.

For citric acid thus prepared Kane gives the following formula: — $C^{12}H^5O^{11} + 3HO + 2Aq$; but if evaporated to a pellicle, the acid crystallises while hot to a different form, and its formula is — $C^{12}H^5O^{11} + 3HO$. According to Berzelius, hypothetical dry citric acid is composed of $C^1H^7O^4$.

The crystals of citric acid are oblique prisms with four faces, terminated by dihedral summits, inclined at acute angles. Their specific gravity is 1 617. They are unalterable in the air. When heated, they melt in their water of crystallisation; and at a higher heat, they are decomposed. They contain 18 per cent. of water, of which one-half may be separated in a dry atmosphere, at about 100° F., when the crystals fall into a white powder.

Citric acid in crystals is composed by Dr. Ure's analysis; — of carbon, 33·0, oxygen, 62·37, and hydrogen, 4·63; results which differ very little from those of Dr. Prout, subsequently obtained. Dr. Ure found its atomic weight to be 8·375, compared to oxygen 1,000. The composition of crystallised citric acid has been thus represented: —

	Atoms.	Eq. wt.	per cent.	Dumas.	Prout.	Ure.
Carbon - - -	4	24	35·8	36·28	34·28	33·00
Hydrogen - - -	3	3	4·5	4·45	4·76	4·63
Oxygen - - -	5	40	59·7	59·27	60·96	62·37

Attempts were made, both in the West Indies and Sicily, to convert the lime and lemon juice into citrate of lime, but they seem to have failed through the difficulty of drying the citrate for shipment.

Citric acid in somewhat crude crystals is employed with much advantage in calico printing. If adulterated with tartaric acid, the fraud may be detected by adding potash to the solution of the acid, which will cause a precipitate of cream of tartar.

The manufacture of citric acid so closely resembles that of tartaric acid, that the makers of one commonly fabricate the other. The raw material in this case is pretty generally a black fluid, like thin treacle, which comes from Sicily, and is obtained by

Digitized by Google

inspissating the expressed juice of the lemon,—the rind having previously been removed from the lemon for the sake of its essential oil. This black juice is impure citric acid, and requires to be treated with chalk, as practised with respect to the first operation on tartar; by which means an insoluble citrate of lime is formed; and this after being well washed with cold water, is decomposed by sulphuric acid; and the solution, after undergoing the action of animal charcoal and proper evaporation, yields brownish crystals on cooling. These are re-dissolved, decoloured, and crystallised three or four times ere they can be sent into the market, for citric acid is more tenacious of colouring matter than most of the other vegetable acids. At Nice, and in the South of France, a portion of chloride of lime is digested upon the citrate of lime, to bleach it prior to decomposition by sulphuric acid. For this purpose, the washed citrate is exposed in shallow vessels to the action of the sun's rays covered by a weak solution of chloride of lime. In a few hours decolouration ensues; and it is moreover stated that the mucilage which hangs about the citrate of lime, and impedes the subsequent crystallisation of the acid, is in this way destroyed, and the number of re-crystallisations requisite to give a saleable aspect to the citric acid thereby diminished.

CITRATES. Combinations of citric acid with alkalies, earths and metals forming salts. See Watts' "Dictionary of Chemistry."

CITRON. (*Citradier*, Fr.; *Cedrato*, Ital.) The fruit of the *Citrus medica*, belonging to the family of dicotyledonous plants the *Aurantiaceæ* or *Hesperideæ*. The rind of this fruit candied is well known as a delicate sweetmeat. The tree producing the citron is the most beautiful of the genus. A curious variety of the citron is cultivated in China, and called the fingered citron, from its lobes all separating into fingers in different shapes and sizes. The fruits of several other genera belonging to the family are greatly esteemed in the countries which produce them. See HESPERIDEÆ. We *imported*, in 1864, 7,803*l.* worth of citron preserved with salt.

CITRUS. A genus of the family *Aurantiaceæ* producing the orange, the lemon, &c.

CITRUS AURANTIUM. The common or sweet orange.
CITRUS BIGARADEA. The bitter or Seville orange, or bigarade.
CITRUS BERGAMIA. The Bergamot orange.
CITRUS DECUMANA. The shaddock: *which see.*
CITRUS LIMETTA. The lime: *which see.*
CITRUS LIMONIUM. The lemon: *which see.*
CITRUS MEDICA. The citron: *which see.*

CIVET. (*Civette*, Fr.; *Zibeth*, Germ.) The odour of this substance is peculiar and very characteristic, and is even more persistent than musk. It forms the base of the famous "Jockey Club" perfume. It is the product of two small quadrupeds of the genus *viverra* (*v. zibetha* and *v. civetta*), of which the one inhabits Africa, and the other Asia. They are reared with tenderness, especially in Abyssinia. The civet is contained in a sac, situated between the anus and the parts of generation in either sex. The animal frees itself from an excess of this secretion by a contractile movement which it exercises upon the sac, when the civet issues in a vermicular form, and is carefully collected. The negroes are accustomed to increase the secretion by irritating the animal; and likewise introduce a little butter, or rather grease, by the natural slit in the bag, which mixes with the odoriferous substance, and increases its weight. It is employed only in perfumery. In 1857, 1,476 ounces were *imported*.

According to M. Boutron-Chalard, it contains a volatile oil, to which it owes its smell, some free ammonia, resin, fat, an extractiform matter, and mucus. It affords by calcination an ash, in which there are some carbonate and sulphate of potash, phosphate of lime and oxide of iron.

CLAUSTHALITE. A selenide of lead which occurs in the veins of Hæmatite at Clausthal and other mines in the Hartz, and at Rio Tinto in Spain.

CLAY. (*Argile*, Fr.; *Thon*, Germ.) The term clay is applied to hydrous-silicates of alumina, derived, for the most part, from the decomposition of felspathic rocks, and which are generally rendered impure by the admixture of other substances. Economically, the term is applied to any finely divided mineral matter, which becomes plastic on being wetted, and retains its shape when moulded or pressed into any particular form. Lime, magnesia, oxide of iron, with some other colouring metallic oxides, are occasionally present in small quantities in certain natural clays: when iron is present, the clay burns red.

The different varieties of clay possess the following common characters:—

1. They are readily diffusible through water, and are capable of forming with it a plastic ductile mass, which may be kneaded by hand into any shape. This plasticity exists, however, in very different degrees in the different clays.

2. They concrete into a hard mass upon being dried, and assume, upon exposure to the heat of ignition, a degree of hardness sometimes so great as to give sparks by col-

Digitized by Google

lision with hardened steel. In this state they are no longer plastic with water, even when pulverised. Tolerably pure clays, though infusible in the furnace, become readily so by the admixture of lime, iron, manganese, &c.

3. All clays, even when previously freed from moisture, shrink in the fire by virtue of the reciprocal affinity of their particles; they are very absorbent of water in their dry state, and adhere strongly to the tongue.

4. Ochrey, impure clays, emit a disagreeable earthy smell when breathed upon.

Brongniart distributes the clay into:—

1. Fire-clays (*argiles apyres*, Fr; *feuerfeste*, Germ.)
2. Fusible (*schmelzbare*, Germ.).
3. Effervescing (*brausende*, Germ.), from the presence of chalk.
4. Ochrey (*ocreuses*, Fr.; *ockrige*, Germ.).

1. *Slate-clay.* (*Schiefer-thon*, Germ.) Its colour is grey or greyish-yellow. Massive, dull, or glimmering from admixture of particles of mica. Fracture slaty, approaching sometimes to earthy. Fragments tabular; soft, sectile, and easily broken; sp. gr. = 2·6; adheres to the tongue, and breaks down in water. Slate-clay is ground and reduced into a paste with water for making fire-bricks; for which purpose it should be as free as possible from lime and iron.

2. *Fire-clay.* In this country the geological position of the *fire-clay*, which is largely employed in the manufacture of fire-bricks, glass-house pots, &c., is immediately beneath the coal, each bed of which rest upon a stratum of greater or less thickness of a clay possessing the peculiar qualities of fire-clay, and distinguished in the mining districts, from the position it occupies with reference to the coal, by the name of *under clay*. The Stourbridge clay is of this character.

3. *Common clay or loam.*—This is an impure coarse pottery clay, mixed with iron, ochre, and occasionally with mica. It has many of the external characters of plastic clay. It is soft to the touch, and forms, with water, a somewhat tenacious paste; but is in general less compact, more friable than the plastic clays, which are more readily diffusible in water. It does not possess the property of acquiring in water that commencement of translucency which the purer clays exhibit. Although soft to the touch, the common clay wants unctuosity, properly so called. The best example of this argillaceous substance, is afforded in the London clay formation, which consists chiefly of bluish or blackish clay, mostly very tough. Those of its strata which effervesce with acids partake of the nature of marl. This clay is fusible at a strong heat in consequence of the iron and lime which it contains. It is employed in the manufacture of bricks, tiles, and coarse pottery ware.

4. *Potter's clay, or Plastic clay.*—This species is compact, soft, or even unctuous to the touch, and polishes with the pressure of the finger; it forms, with water, a tenacious, very ductile, and somewhat translucent paste. It is infusible in a porcelain kiln, but assumes it in a degree of hardness. Werner calls it *pipe-clay*. Good plastic clay remains white, or if grey before, becomes white in the porcelain kiln. The clay from Poole in Dorsetshire is a celebrated potter's clay, and the clay from the neighbourhood of Newton Abbot in Devonshire is a well-known pipe-clay.

The geological position of the Plastic clay of geologists, is beneath the London-clay, and above the sand which covers the chalk-formation. The Plastic clay of the Paris basin is described as consisting of two beds separated by a bed of sand. The lower bed is the proper plastic clay. The plastic clay of *Abondant*, near the forest of Dreux, analysed by Vauquelin, gave—

Silica, 43·5; alumina, 33·2; lime, 0·35; iron, 1; water, 18.

This clay is employed as a fire-clay for making the bungs or *seggars*, or coarse earthenware cases, in which china ware is fired.

The plastic clay of Dorsetshire which supplies the great Staffordshire potteries, occurs near the base of the Bagshot beds. It is grey coloured, less unctuous than that of Dreux, and consequently more friable. It becomes white in the pottery kiln, and is infusible at that heat. It causes no effervescence with nitric acid, but falls down quickly in it, and becomes higher coloured. Its refractoriness allows of a harder glaze being applied to the ware formed from it without risk of the heat requisite for making the glaze flow affecting the biscuit either in shape or colour. "Most of the plastic clays of France," says M. Brongniart, "employed for the same ware, have the disadvantage of reddening a little in a somewhat strong heat; and hence it becomes necessary to coat them with a soft glaze, fusible by means of excess of lead at a low heat, in order to preserve the white appearance of the biscuit. Such a glaze has a dull aspect, and cracks readily into innumerable fissures by alternations of hot and cold water." Hence one reason of the vast inferiority of the French stoneware to the English. See DORSETSHIRE CLAY.

5. *Porcelain clay or Kaolin earth.*—Kaolin is generally a hydrous silicate of alumina, expressed by the formula $\dot{A}l\ddot{S}i + 2H$ = Silica 40·0, alumina 44·5, water 12·5.

Digitized by Google

A few general remarks on clays in general, and in reference especially to their use in the arts will not be out of place here.

Pure clay, the silicate of alumina of the chemist, is infusible; but when subjected to the fire of a porcelain kiln, it contracts into about one-half of its total bulk. It must, however, be heated very cautiously, otherwise it will decrepitate and fly in pieces, owing to the sudden expansion into steam of the water combined with its particles, which is retained with a considerable attractive force. It possesses little plasticity, and consequently affords a very short paste, which is apt to crack when kneaded into a cake.

It is not only infusible by itself, but it will not dissolve in the fusible glasses, making them merely opaque. If either lime or silica be added separately to pure clay, in any proportion, the mixture will not melt in the most violent furnace; but if alumina, lime, and silica, be mixed together, the whole melts, and the more readily, the nearer the mixture approaches to the following proportions: — 1 of alumina, 1 of lime, and 3 of sand. If the sand be increased to five parts, the compound becomes infusible. These interesting facts show the reciprocal action of those earths which are mixed most commonly, in nature, with alumina.

Iron in small quantity, but in a state not precisely determined, though probably of protoxide, does not colour the clays till they are subjected to a powerful heat. There are very white clays, such as those of Montereau, which do not become red till calcined in the porcelain kiln; the oxide of iron contained in them, which colours them in that case, was previously imperceptible. It is from this circumstance, that the clays fit for making fine white stone ware, as also the Kaolins adapted to the manufacture of porcelain, are very rare.

Iron, in larger proportion, usually colours the clays green or slate-blue, before they have been heated. Such clays, exposed to the action of fire, become yellow or red according to the quantity of iron which they contain. When the iron is very abundant, it renders the clays fusible; but a little lime and silica must also be present for this effect. The earthenware made with these ferruginous clays can bear but a moderate baking heat; it is thick, porous, and possesses the advantage merely of cheapness, and of bearing considerable alternations of temperature without breaking.

Silicate of alumina and the aluminous clays which possess most plasticity are apt to crack in drying, or to lose their shape. This very serious defect for the purposes of pottery is rectified, in some measure, by adding to that earth a certain quantity of sand or silica. Thus, a compound is formed which possesses less attraction for water, and dries more equably from the openness of its body. The principal causes of the distortion of earthenware vessels, are the unequal thickness of their parts, and quicker desiccation upon one side than another. Hard burnt stoneware ground to powder, and incorporated with clay, answers still better than sand for counteracting the great and irregular contraction which natural pottery paste is apt to experience. Such ground biscuit is called *cement;* and its grains, interspersed through the ware, may be regarded as so many solutions of continuity, which arrest the fissures.

The preceding observations point out the principles of those arts which employ clay for moulding by the wheel, and baking in a kiln.

To determine the quantity of alumina in clay, a given weight of this substance, say 100 grs., well dried and in fine powder, should be mixed with double its weight of fluor spar, also in fine powder, then the mixture placed in a platinum or leaden vessel, and about 400 grs. of strong sulphuric acid poured over it. Next expose the whole to a heat of from 212° to 215° Fahr. for half an hour; then add three or four ounces of water, and throw the mixture on a filter, adding a little water at the end of the filtration, so as to obtain the whole of the soluble matter. To the filtered fluid add now an excess of a solution of ammonia, by which the alumina will be precipitated; and this, after being well washed on a filter, and dried at a red heat, must have its amount determined by the balance. If, however, the precipitate thrown down by ammonia has a deep yellow or red colour, the presence of iron is indicated; and this must be removed before drying the alumina. For this purpose, a quantity of tartaric acid should be added, so as to redissolve the mixed precipitate, and the solution slightly supersaturated with carbonate of soda; when, on adding hydrosulphite of ammonia, the iron will separate as a black sulphuret, leaving the alumina still in solution; from whence it may be obtained by evaporating the whole to dryness, heating red hot, and then washing away the alkaline salts by hot water; the alumina is then left pure, and, after being dried, may be weighed. As the presence of iron in clay is a serious drawback, the quantity of black sulphuret formed becomes a good indication of the impurity of the sample under examination, and is therefore worthy of notice.

Although the proportion of alumina in clay is the chief commercial feature required by the makers of earthenware, yet it may sometimes be requisite to determine also the amount of silica present; which may be done by fusing together in an iron crucible

Digitized by Google

or pan, at a full red heat, one part of the clay in question with three parts of pure potash—both being in fine powder, and carefully mixed before fusion. The fused mass must, when cold, be boiled for some time in water, until it is thoroughly disintegrated; when it should be poured into a porcelain vessel, and supersaturated with muriatic acid; after which, by evaporating to dryness, a residue will be obtained, that, after careful washing with boiling water, consists merely of the silica contained in the clay in question. After being heated red hot, it may be weighed as usual. If lime be suspected to exist with the alumina in clay, this may be separated, when in solution, by means of tartaric acid and carbonate of soda, as above indicated; for, in such cases, the lime will fall at once as a carbonate, leaving the alumina behind in the fluid. The following remarks by Dr. Ure have still their application, and are therefore retained:—

"If a glazing material could be discovered, the expansions and contractions of which, by heat, exactly corresponded with those of the biscuit ware, or silicate of alumina, under the same influence, then the present system of covering a spongy body by a coating of vitrifiable glaze would answer the desired intention well enough; for to the cheapness and durability of earthenware would thus be superadded the cleanliness of glass. But this desideratum has been sought for, over and over again, during the last half century, and nothing but disappointment has resulted. In proof of which we have only to ask—Where is that glazed earthen vessel, which, though made expressly for the use of the apothecary, will retain oil, after being two or three times heated and cooled? The answer to this question must be our argument in favour of abandoning such a system of glazing, and adopting the only other mode by which a non-absorbent pottery ware can be fabricated. The body of the ware itself must undergo a semivitrification, as happens with the finest kind of china; so that, even if by long use the glaze come to be fairly worn off, still the non-absorbent principle would remain as perfect as at first. A mixture of silica and alumina, in the proportion of four atoms of the former to one of the latter, would bear or require a certain quantity of fusible material to induce semivitrification throughout the mass; but a compound of three atoms of silica and one of alumina would probably be melted down into a worthless slag by exactly the same addition. Here then lies the root of that difficulty which has hitherto so injuriously restricted the employment of felspar and other vitrifiable bodies in the fabrication of British earthenware. Those who have attempted to use such substances have occasionally succeeded to admiration; and nothing but the uncertainty of the result, and repeated failures, have induced them to abandon the employment of a class of articles which, if capable of being controlled, every intelligent manufacturer admits would confer perfection on his art. But it is a great mistake to suppose that these inequalities of action arise out of some peculiarity in the vitrifiable materials themselves, or are in any way the work of chance. The materials are, or ought to be, uniform, and certainly can be made so, whilst, for the rest, there is no such thing as chance in nature,—the laws of chemistry are not accidental or variable, they are immutable. We have shown, however, that clays not only differ from each other, but, as it were, from themselves; since, from the same pit, and within a few inches of the same spot, clays of very contrary characters may be procured. Plasticity is no more an indication of the presence or purity of clay, than sweetness is a test of sugar. In a rough way both these qualities have a value; but the arts are now fast approaching an epoch, when all such fallacious aids must give place to the guidance of philosophy; and the sooner our manufacturers become convinced of this grand truth the better for themselves and their country. The propriety of knowing the exact composition of the raw materials employed in any art or manufacture does not, indeed, admit of dispute—it is imperative; and hence we are the more astonished at the scantiness of information respecting the analysis of so important a production as clay. In face of such apathetic ignorance, would any one believe that, independently of an immense home consumption, our exports of earthenware last year amounted to a million sterling? Had the clays of this country been of a tolerably uniform composition, like some of those in China and on the continent, of course mere practice would long ago have enabled our potters to produce articles of the highest quality. Where there is no difficulty there can be but little merit, and still less profit. It is the great glory of British enterprise and industry to despise so low and facile a position. Our manufacturers must meet and overcome the trivial impediments connected with variations in the clay they purchase, and, by properly adjusting the other materials (so as to bring on exactly the due amount of vitrification needed in the body of the ware), produce, from any kind of clay, articles identical with those which other nations fabricate from the very finest clays only.

"Before quitting this subject, a few remarks upon the substances used in the formation of glazes may not be inappropriate. To a certain extent, we are still supplied with earthenware, the glaze of which contains lead, and is, consequently, dangerous to health, though, when well burned on, this danger is greatly diminished, from the

Digitized by Google

increased insolubility of the silicate of lead in weak acids. It is, however, an objectionable mode of glazing earthenware, and requires to be watched with caution, more especially where borax is used at the same time, for the borate of lead is more easily acted on than the silicate. It has been lately suggested that oxide of zinc would form a sufficiently fusible compound with silica, and is cheap enough to supplant oxide of lead in the glazing of common earthenware. The latter assertion is undoubtedly true, and, although we entertain some suspicions as to the easy fusibility of silicate of zinc, yet this is precisely one of those problems which, from their important sanitary bearing, deserve immediate investigation. On the continent a very pure kind of felspar, mixed probably with a little carbonate of baryta and oxide of tin, forms the only glaze used upon porcelain and the china vessels intended for chemical purposes. It is so hard as to withstand the attack of a file, and it resists the action of the strongest acids and alkalies at all temperatures below 300° Fahr.—the hydrofluoric acid and its salts alone excepted." See KAOLIN and POTTERY.

The composition of ordinary clay will be seen from the following analyses, by Mr. T. H. Henry :—

1. Fire-clay (Stourbridge, Brierly Hill).

Silica	51·80
Alumina	30·40
Protoxide of iron	4·14
Magnesia	·50
Water and organic matter	13·11
	99·95

With trace of soda.

2. Three samples of Fire-clay from Wales:— No. 1, inferior; the other two good; No. 3, the best.

	I.	II.	III.
Silica	50·35	56·90	54·80
Alumina	23·50	24·90	27·60
Oxide of iron	10·40	2·83	2·56
Magnesia	1·45	1·07	1·00
Soda	1·55	3·00	2·00
Water and organic matter	11·85	11·60	11·80
	99·10	100·30	99·76

3. Clay making good red bricks.

Silica	50·40
Alumina and oxide of iron	24·00
Carbonate of lime	2·70
„ magnesia	1·30
Water, &c.	21·60
	100·00

4. Clay inferior, on account of excess of carbonate of lime; effervesced strongly with acids.

Silica	33·06
Oxide of iron and alumina	11·20
Carbonate of lime	39·80
„ magnesia	6·00
Water, &c.	10·00
	100·06

5. Black shale from coal measures, Dudley.

Silica	48·75
Alumina	17·95
Oxide of iron	15·70
Lime	2·32
Magnesia	1·50
Water, &c.	13·35
	99·57

Digitized by Google

Clay of all sorts *exported* in 1864 :

	Tons.	Computed real value.
To Russia	2,202	£3,563
Sweden	1,642	1,647
Prussia	1,457	1,763
Hanover	887	1,432
Hamburg	2,742	3,496
Holland	8,211	8,997
Belgium	11,079	13,974
France	16,487	22,486
Spain and the Canaries	3,001	3,218
Italy: Sardinian States	988	1,227
United States: North Atlantic Ports	3,361	6,961
South Atlantic Ports	20	44
Pacific Ports	39	33
Other Countries	6,740	7,670
	58,856	76,511

CLAY IRON STONE. See IRON.

CLAYITE. A variety of Galena. See LEAD.

CLAY-SLATE. *Argillaceous Schist.* See SLATE.

CLAYSTONE. An earthy felspathic rock of the trap group, occurring in veins and in mountain masses. It becomes porphyritic by the intermixture of felspar crystals, and is then known as *Claystone porphyry.*

CLICHY WHITE. A white lead manufactured at Clichy in France. See WHITE LEAD.

CLOTH MANUFACTURE AND DRESSING. See WOOLLEN and WOOL.

CLOVES. (*Clou*, Fr.; *Clavo*, Span.) The clove tree, *Carophyllus aromaticus*, is a small tree from fifteen to thirty feet high, a native of the Moluccas. The flowers are odorous and the bark, fruit, leaves, and roots are all more or less aromatic. The flower buds are the cloves of commerce; when prepared they have the appearance of a nail, hence their name from *clavo*, a nail. The buds as soon as they are gathered are dried in smoke over a fire, in the sun, or in a kiln. They are exported in small boxes.

The clove trade was at one time the monopoly of the Dutch. The clove tree is, however, now cultivated both in the East and West Indies, but the finest are still brought from Amboyna in the Moluccas.

Our importation of cloves in 1864 was as follows :

	lbs.	Computed real value.
From Holland	130,526	£3,107
East Coast of Africa	146,813	2,361
United States: North Atlantic Ports	87,985	1,392
Sierra Leone	41.429	669
Bombay and Scinde	896,072	14,125
Madras	313	5
Singapore	23,006	1,272
Other Parts	2,302	41
	1,328,446	22,972

CLOVE OIL. ($C^{20}H^{12}O^4$. *Syn. Eugenic acid, Carophyllic acid.*) When cloves are distilled with water, a large quantity of oil passes over. It has been examined by Dumas, Ettling, Böckmann, Stenhouse, Calvi, and, more recently, by Greville Williams. Treated with solution of potash, the greater portion dissolves, leaving a small quantity of a hydrocarbon isomeric with oil of turpentine. See CARBURETTED HYDROGEN. The potash solution, on being supersaturated with a mineral acid, allows the eugenic acid to rise to the surface in the form of an oil. When freshly distilled it is colourless, and boils at 483° S. Its density at 57°·2 F. is 1·0684. On analysis it gave :—

	Greville Williams.		Calculation.		
Carbon	73·1	73·1	C^{20}	120	73·17
Hydrogen	7·7	7·6	H^{12}	12	7 32
Oxygen	19·2	19·3	O^4	32	19·51
	100·0	100·0			100·00

The density of its vapour was found to be 5·86. Theory requires 5·67. The above results were confirmed by a determination of the per centage of baryta in the eugenate.—C. G. W.

Digitized by Google

COAL. *Houille*, Fr.; *Steinkohle*, Germ). Coal is a mineral of vegetable origin. There is abundant evidence to prove this, but, there still exists considerable uncertainty as to the mode of conversion—as to the character of the plants which went to the production of coal—indeed, as to the parts of plants required, and as to the conditions under which our coal beds were formed. This is not the place for the discussion of these questions, but it appears necessary that the hypotheses of the best authorities on the subject should be briefly given.

"The occurrence of vegetable remains in all kinds of coal is such convincing evidence of its formation from vegetable substances, that all further proof is superfluous."—*Gustav Bischof.* Ph. D.

"There are few varieties of coal in which their vegetable origin can be detected by anatomical examination."—*Göppert.*

"It appears from the researches of Liebig, and other eminent chemists, that when wood and vegetable matter are buried in the earth, exposed to moisture, and partially or entirely excluded from the air, they decompose slowly, and evolve carbonic acid gas, thus parting with a portion of their original oxygen. By this means they become gradually converted into lignite or wood coal, which contains a larger portion of hydrogen than wood does. A continuation of decomposition changes this lignite into common or bituminous coal, chiefly by the discharge of carburetted hydrogen or the gas by which we illuminate our streets and houses. According to Bischoff, the inflammable gases which are always escaping from mineral coal, and are so often the cause of fatal accidents in mines, always contain carbonic acid, carburetted hydrogen, nitrogen, and olifiant gas. The disengagement of all these gradually transforms ordinary or bituminous coal into anthracite, to which the names of splint coal, glance coal, hard coal, culin, and many others have been given."—*Lyell.*

"These drifts of plants now forming streaks of coally matter in the sandstones or shales including them, are sufficient to show that though numerous coal beds may be the result of the growth of a peculiar vegetation in places, the roots of which required and penetrated a suitable soil beneath, it might so happen that extensive and deep accumulations of drifted plants may wholly form coal beds under favourable circumstances."—*De la Beche.*

True coal is so altered from its original vegetable condition as to have left scarcely any trace of its true history. It is generally, however, associated with sands and clays, exhibiting numerous fragments of the ancient vegetation that obtained at the time of its formation; but these fragments are so far removed in every respect, from the existing form of vegetation, as to afford little clue to the ancient condition of the earth in this respect. In coal all trace of true woody fibre has disappeared; the water originally present, and so injurious in the less altered forms of vegetable fuel, is entirely absent, or if present at all, is so rather mechanically than chemically, while the water originally in the plant appears to have undergone decomposition, the hydrogen uniting with some part of the carbon, to form carburetted hydrogen gas often existing in the cells, and between the plates of the coal under considerable pressure, and the oxygen being almost entirely removed. The former vegetable has now become a mineral substance, and lies in vast beds of variable thickness, and overlaying each other to the extent sometimes of more than a hundred in a single district; such beds being regularly interstratified with deposits of sand and clay, and occupying a distinct geological position, being, with only a few exceptions, confined to rocks belonging to the newer part of the palæozoic series.

The changes undergone by vegetable matter when buried in the earth, and accumulated in large quantities, and the length of time needed to produce any marked alteration, are subjects rather more interesting, it may seem, to the chemist than to the practical man, who looks only for fuel that he may employ economically. But inasmuch as the real condition of coal varies considerably, it is desirable that the whole history of coal and lignite beds, should be generally understood by any one using these substances extensively.

Vegetable matter consists of carbon in combination with oxygen and hydrogen, as its principal constituents; nitrogen forming but a small although an important part in its economy. A large quantity of water is also present, and so long as the vegetable lives, there is a constant change and circulation of material particles, kept up, replacing and renewing the different portions. When death takes place, there is a tendency to decomposition, or the separation of the whole into minute atoms having no further relation to each other. But this is frequently checked by various conditions, such as the presence of some substances derived from plants themselves, or the absence of sufficient oxygen gas to allow the change to take place by combining with the carbon to form carbonic acid gas, the first step in the process of destruction. These causes act constantly but partially, and thus a large quantity of vegetable matter is always in the course of decomposition, while in particular spots a large

Digitized by Google

quantity is constantly being accumulated. The latter condition is seen in our climate in the gradual but steady increase of peat bogs.

That coal is derived from the vegetable kingdom no longer admits of a doubt, but the class of plants to which more especially we are to look for the origin of coal, is still a matter of much uncertainty; and the conditions under which the change is brought about are very imperfectly understood, and indeed by many geologists entirely misconceived. The idea generally entertained is, that—already described in part—which supposes, a natural basin in which vegetable matter is deposited, the layers, according to circumstances varying in thickness, which become covered with mud or sand, and were thus entombed; the decomposition and disintegration breaking up the vegetable structure, goes on for ages.

Microscopic observers assure us that they are enabled to detect ligneous structure in the bituminous coal. Mr. Quecket has given a great number of drawings in proof of this, and he refers the coal to the *woody* matter of an extinct class of the Conifera. Botanists of eminence, however, assure us that there is no evidence of ligneous structure in any of the examples brought forward in proof of that hypothesis.

Sir Charles Lyell in his excellent *Manual of Elementary Geology* enters largely and with his usual lucid manner, into the consideration of the carboniferous plants. There can be no doubt of the existence of the remarkable flora described by him during the period when our beds of fossil fuel were forming. Referring to Sir William Logan as his authority, Sir Charles says, "It was observed that while in the overlying shales or 'roof' of the coal, ferns and trunks of trees abound, without any *stigmariæ*, and are flattened and compressed, those singular plants of the underclay (*the stigmariæ*) very often retain their natural forms of branching freely, sending out their slender leaf-like rootlets, formerly thought to be leaves, through the mud in all directions." This plant is singularly indicative of the class of plants from which coal has been derived.

M. Adolph Brogniart states that the number of species of carboniferous plants amounts to about 500. Lindley informs us that no less than 250 ferns have been obtained from the coal strata. Forty species of fossil plants of the coal period have been referred to the *Lepidodendrons*. These with *Equisetaceæ*, *Colamites*, *Asterophyllites*, *Sigillaria*, of which about thirty-five species are known with their roots, *Stigmariæ*, and *Conifera* make up the remarkable flora which have been preserved to us in our coal series.

Trees and humbler plants in great variety are found in the carboniferous sandstones and shales, and in the coal itself, but it does not appear that we have any one evidence of the actual conversion of the woody fibre of these plants into coal; that is, there is no evidence of the direct conversion of wood into bituminous coal. The trees are almost invariably silicified, or converted into columns of sandstone; the carbon which constituted the original woody fibre being *substituted* by silica, or sometimes by carbonate of lime, and sometimes by iron. Sir Charles Lyell has carefully examined the phenomena, now in progress, of the great Delta of the Mississippi, and he perceives in them many facts which fully explain, to his mind, the progress of coal deposit. It cannot, however, be disguised that even while he refers the coal to the supposed submerged forests, he does not venture to explain any of those changes, which he evidently believes depend upon some peculiar conditions of climate.

Professor John Phillips, who has devoted much study to this subject, says, "There is no necessity to enlarge upon the proofs of the origin of coal from vegetables, drawn from an examination of its chemical constitution, as compared with the vegetable products, and the composition of the ligneous parts of the plants, and from the *unanswerable identity of the carbonaceous substance*, into which a vast multitude of fossil plants have been converted. The chemical constitution of this carbonaceous product of the individual vegetables, is exactly analogous to the chemical constitution of coal; and it is quite probable that hereafter the reason of the variations to which both are subject, whether dependent on the original nature of the plant or produced by unequal exposure to decay after inhumation, or metamorphic subsequent operations, will be as apparent as that of the general argument arising from a common vegetable origin." — *Manual of Geology.*

Mr. Jukes says, "If therefore, we suppose wood (or vegetable matter) buried under accumulations of more or less porous rock, such as sandstone and shale, so that it might rot and decompose, and some of its elements enter into new combinations, always using up a greater quantity of oxygen and nitrogen than of carbon and hydrogen, or of oxygen and hydrogen than of carbon, we should have the exact conditions for the transformation of vegetable matter into coal." — *The Student's Manual of Geology.*

Much stress has been laid upon the fact that we have brown coal still retaining all the unmistakeable characters of wood, and the *apparent* passage of this into true coal.

Digitized by Google

Göppert states that the timber in the coal mines of Charlottenbrunn is sometimes converted into brown coal. The same conversion was many years ago found in an old gallery of an iron mine at Turrach in Styria. A. Schrötter explains, according to the analysis made by him, this conversion, by the separation of marsh gas and carbonic acid from the ligneous fibre of oak wood.—*Bischof.*

The same authority says, "This conversion of wood into coal may take place in four different ways, namely:

"1. By the separation of carbonic acid and carburetted hydrogen.
2. „ „ carbonic acid and water.
3. „ „ carburetted hydrogen and water.
4. „ „ carbonic acid, carburetted hydrogen and water."

Quoting the information accumulated by Bischof for the purpose of showing the chemical changes which take place, the following analyses are given :—

	Carbon.	Hydrogen.	Oxygen.	Authority.
Oak Wood	52·53	5 27	42·20	Gay-Lussac and Thenard.
Decayed Oak Wood	53·47	5·16	41·37	Liebig.
Fossil Wood	57·8	5·8	36·4	Regnault.
Turf	60·1	6·1	33·8	Vaux.
Lignite	72·3	5·3	22·4	Regnault.
Coal from the Marennes (Tuscany).	76·7	5·2	18·1	Bischof.
Retinite from the brown coal mines of Walchow	80·3	10·7	9·0	Schrötter
Peat Coal	80·7	4·1	15·2	Baer.
Coal	82·2	5·5	12·3	Bischof.

Such is, in the main, the evidence brought forward in support of the view that coal is the result of the decomposition, upon the place where it is found, of woody fibre. The following remarks by Professor Henry Rogers on the structure of the Appalachian coal exhibits some of the difficulties which surround this view :—

"Each bed is made up of innumerable very thin laminæ of glossy coal, alternating with equally minute plates of impure coal, containing a small admixture of finely divided earthy matter. These subdivisions, differing in their lustre and feature, are frequently of excessive thinness, the less brilliant leaves sometimes not exceeding the thickness of a sheet of paper. In many of the purer coal-beds these thin partings between more lustrous layers consist of little laminæ of pure fibrous charcoal, in which we may discover the peculiar texture of the leaves, fronds, and even the bark of the plants which supplied a part of the vegetable matter of the bed. All these ultimate divisions of a mass of coal will be found to extend over a surprisingly large surface, when we consider their minute thickness. Pursuing any given brilliant layer, whose thickness may not exceed the fourth part of an inch, we may observe it to extend over a superficial space which is wholly incompatible with the idea that it can have been derived from the flattened trunk or limb of any arborescent plant, however compressible. When a large block of coal is thus minutely and carefully dissected it very seldom, if ever, gives the slightest evidence of having been produced from the more solid parts of trees, though it may abound in fragments of their fronds and deciduous extremities."

It is not possible, within the space which can be afforded to this article in the present work, to examine further the various views which have been entertained by geologists and chemists of the formation of coal. A brief summary must now suffice.

1. Coal is admitted upon all hands to be of vegetable origin.

2. Many refer coal to some peculiar changes which have taken place in wood; others to the formation and gradual subsidence of peat bogs (*Unger*). Fuci have also been thought by some to supply the materials for coal-beds.

3. By some the coal is thought to be found upon the spots on which the trees grew and decayed. By others it is supposed that vast masses of vegetable matter were drifted into lakes or deltas, to be there decomposed.

4. Whether the plants grew on the soil — *the under clay* — upon which the coal is found, or were drifted to it; there must have been long periods during which nothing but vegetable matter was deposited, and then a submergence of this land, and vast accumulations of mud and sand. The number of coal seams in some of our coal fields, and the thicknesses of the strata will be given.

Digitized by Google

Henry Rogers and others suppose, that the whole period of the coal measures was characterised by a general slow subsidence of the coasts on which we conceive that the vegetation of the coal grew; that this vertical depression was, however, interrupted by pauses and gradual upward movements of less frequency and duration, and that these nearly statical conditions of the land, alternated with great paroxysmal displacements of the level, caused by the mighty pulsations of earthquakes. (See FAULTS, HEAVES.)

The difficulties are mainly the facts—

1. That the evidence is not clear that anything like *ligneous structure* can be detected in coal.

2. That the *woody matter* found in coal is never converted into coal, although sometimes it appears as if the bark was so changed.

3. That the coal arranges itself always in exact obedience to the underlying surface, as though a semi-fluid mass had been spread out on a previously formed solid bed.

4. The thinning out of true coal to extreme tenuity, as mentioned by Professor Rogers; numerous examples of which appear in this country.

5. The extreme difficulty connected with the subsidence of the surface of the earth to such a depth as that to which the lowest seams of coal extend.

We do not intend to answer any of those difficulties, but to leave the question open for further examination; merely remarking, in conclusion, that there can be no doubt of the vegetable origin of coal; the only question is, the conditions of change by which bituminous coal has been produced from vegetable fibre,—and—that we have not completed all the links in the chain between brown coal and true coal.

The following Table shows at a glance the chemical difference between wood and brown coal on the one hand, and anthracite on the other; and serves to explain what has been said of the chemical changes; by which wood is supposed to pass into bituminous and, eventually, anthracite coal:—

	Locality.	Authority.	Carbon.	Hydrogen.	Oxygen.	Nitrogen.
Pure woody fibre	- - -	Schodler - -	52·65	5.25	42·10	
Beech - - -	- - -	Chevrndler - -	48·89	6·07	43·11	0·93
Oak - - -	- - -	Ditto - -	50·64	6·03	42·05	1·28
Peat - - -	Holland - -	Milder - - -	59·27	5·41	35·32	
Ditto - - -	Long - -	Regnault - -	60·06	6 21	33 73	
Ditto - - -	Bog of Allen -	Kane - - -	61·02	5·77	32 40	0·80
Ditto - - -	Upper Shannon	Ditto - -	61·21	5·61	31·44	1·62
Lignite - - -	Cologne - -	Regnault - -	63·42	4·98	27·11	
Ditto - - -	Patagonia - -	J. A. Phillips -	62·19	5·08	19·44	
Brown coal - -	Neider Alpen -	Regnault - -	69·05	5·20	22·74	
Ditto - - -	Wigan - -	J. A. Phillips -	80·21	6·30	8·54	
Ditto - - -	Bog Head - -	Hofmann - -	65·66	8 90		
Ditto - - -	Ditto - -	Anderson - -	64·02	8·09	5·66	0·55
Cannel coal - -	Wigan - -	Richardson - -	83·75	5·66	8 03	
Cherry coal - -	Newcastle -	Ditto - -	81·20	5·04	8·43	
Carr's Hartley -	Ditto - -	Admiralty Inquiry	79·83	5·11	7·26	1·17
Steam Wallsend -	Ditto - -	Ditto - -	83·71	5·30	2·79	1·06
Resolven - -	South Wales -	Ditto - -	79·33	4·75	- -	1·38
Neath Abbey - -	Ditto - -	Ditto - -	89·04	5·05	- -	1·07
Graigola - -	Ditto - -	Ditto - -	84·87	3·84	7·19	0·41
Aberaman - -	Ditto - -	Ditto - -	90·94	4·28	0·94	1·21
Anthracite - -	Ditto - -	Ditto - -	91·44	3·46	0·79	0·21
Ditto - - -	Slievardagh, Ireland - -	Ditto - -	80·03	2·30	- -	0 23
Ditto - - -	Vizille - -	Jacqueline - -	94 09	1·85		
Ditto - - -	Swansea - -	Regnault - -	91·29	2·33	0·82	0·45

Brooke and Miller divide coal into three varieties—1. Anthracite; 2. Black coal; 3. Brown coal. The chemical differences between those being:

	1	2	3
Carbon - - - - - -	94·10	83·75	73·79
Hydrogen - - - - -	2·39	5·66	7·46
Oxygen - - - - - -	1·34	8·04	13·70
Nitrogen - - - - - -	0·87		
Ash - - - - - -	1·30	2·55	4·96

Other mineralogists, as Dana, divide coal into bituminous and non-bituminous, and under these divisions they group the numerous varieties of coal which occur, as

BITUMINOUS VARIETIES. 1. *Pitch or caking coal* (*Dana*), which burns readily with a yellow flame, and which on receiving the heat unites into a solid mass; thus requiring poking to prevent a too complete consolidation of the mass. 2. *Cherry*

Digitized by Google

coal somewhat resembles caking coal, but in burning it does not soften or cake. It burns more rapidly than caking coal, with a clear yellow flame. 3. *Splint coal* or *splent coal* is in Scotland a term for a hard laminated variety of bituminous coal, intermediate in texture, between caking and cannel coal. The name is derived from its splitting (or *splenting*) up in large flaggy or board-like laminæ (*Page*). It is a coarse kind of cannel coal (*Dana*). A variety of bituminous (cannel) coal, with a slaty structure, and of a harder and tougher nature than cherry coal. Splint coal is used by Lyell as the equivalent to anthracite. 4. *Cannel coal.* A coal with a fine compact texture, a large conchoidal fracture; it receives a good polish; is sonorous when struck. It is coal more perfectly bituminised than No. 1. In Scotland this coal is called *parrot coal* from the crackling, chattering noise which it makes when first thrown into the fire.

Jet resembles cannel coal, but is blacker, and has a much more brilliant lustre.

Flint Coal. A kind of coal resembling anthracite in appearance; but containing bitumen.

Flew Coal. A coal resembling flint coal. It must be regarded as a local name for the coal found at Wedgebury in Staffordshire.

Crow Coal. A coal found near Alston, containing but a small quantity of bitumen.

Albert Coal or *Albertite.* A bituminous coal found in Nova Scotia; it has the appearance of asphaltum, and is partially soluble (about 20 per cent), but it has not the fusibility of asphaltum.

Non-Bituminous Varieties. *Anthracite.* A coal with a sharp edged, shining, conchoidal fracture, not easily ignited, but when burning it gives out an intense heat, unaccompanied by smoke, and produces but little flame. Often called *stone coal.*

Culm. An impure shaly kind of coal, or anthracite shale, as the culmniferous or anthracite shales of Devon. The term is used in parliamentary returns to signify anthracite.

Fossil Coke. An American variety, more compact than artificial coke, supposed to be produced by the action-trap rocks on anthracite.

Recent Coal. The true coal era is a well-marked one. Geologically it lies between the old red sandstone and the new red sandstone rocks. A newer coal is found in the lias at Richmond in Virginia, United States, and belonging to the Oolites, at Brora in Sutherlandshire, Scotland. These newer coals are very insignificant as compared with the true old coals.

Brown Coal. This comparatively recent coal sometimes resembles bituminous coal. Other varieties have a brownish-black colour, with a coal-like lustre. It is called, when it approaches ordinary coal in hardness and appearance, *stone coal.*

Lignite. Wood in a process of change; when it still retains its woody structure, it is called *wood* or *board coal*; when it consists of thin layers, it is termed *paper coal*, and when soft and earthy it is known as *peat coal.*

The relative importance of mineral fuel in various countries, as indicated by the actual coal area and the real production of the coal fields, may be understood by a reference to the subjoined table. These areas are based upon the data given by Mr. Taylor, but with some modifications.

Countries.	Coal Area in Square Miles.	Proportion of whole Area of the Country.	Annual Production in Tons in 1865.
British Islands - -	12,800	1-10	98,150,587
France - - -	2,000	1-100	11,300,000
Belgium - - -	520	1-22	9,758,200
Spain - - - -	4,000	1-52	500,000
Prussia - - -	1,200	1-90	10,748,685
Bohemia - - -	1,000	1-20	1,966,000
United States of America	113,000	2-9	16,472,410
British North America	18,000	1-20	2,750,000

Coal-fields of the United Kingdom.

It will be thus seen how extremely important the coal-fields of the British islands really are when compared with any others elsewhere. This is the case not merely in the total annual production and the proportionate extent of the deposit, but also from the great number of points at which the coal can be advantageously worked. This will be best seen by reference to the table given at the end of the article.

Digitized by Google

The distribution of coal in the United Kingdom is of vast importance to the country. It is spread over large areas, commencing with Devonshire in the south and extending to the northern divisions of the great Scotch coal-fields. A careful examination of all these deposits cannot but prove useful.

DEVONSHIRE. *Lignite of Bovey-Heathfield.*—Lysons (*Magna Britannia*) informs us that this so-called Bovey coal was worked for use early in the last century; and Dr. Maton described those beds in 1797 as being from 4 to 16 feet in thickness, alternating with clay, and he stated that the pits were about 80 feet deep, and worked for the supply of a neighbouring pottery. A pottery was established at Ideo in 1772, and one at Bovey Tracey in 1812, both of which were supplied with fuel from those lignite beds Those beds are supposed to have been formed towards the latter part of the supercretaceous periods. The wood of which they are formed has been sometimes supposed to be analogous to the oak and other existing trees. The supply from those beds of "Bovey coal" is now falling off, the adjoining pottery being compelled to use some coal as fuel.—*De la Beche.*

Bideford Anthracite.—The beds of Anthracite stretch across the country from Barnstaple Bay, by Bideford and Averdiscot, towards Chittlehampton, a distance of about twelve miles and a half. The anthracite is mixed with the black shales of the carbonaceous deposits.

"The anthracite is mixed with those shales in the manner represented beneath *fig.* 463; *a*, sandstones; *b*, shales; *c*, culm or anthacite; so that the culm itself seems the result of irregular accumulations of vegetable matter intermingled with mud and sand. As so frequently happens with carbonaceous deposits of this kind, nodules of argillaceous iron-stone are often found in the same localities with the shales and anthracite, reminding us of the intermixture of iron ores and vegetable matters in the bogs and morasses of the present day."—*De la Beche.*

463

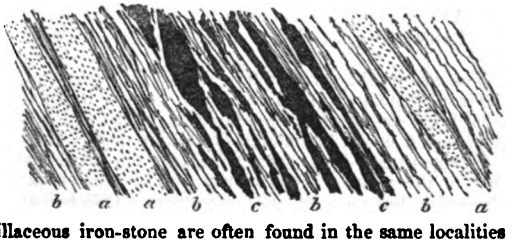

SOMERSETSHIRE AND GLOUCESTERSHIRE.—The Dean Forest coal-field, and the coal measures, extending further south forming the Bristol coal-field, are included in this division. The workable seams of coal in the forest are the following:—

		ft.	in.
Dog Delf	(having a thickness of)	1	2
Smith Coal	"	2	6
Little Delf	"	1	8
Park End High Delf	"	3	7
Stakey Delf	"	2	6
Little Coal	"	1	1
Rocky Delf	"	1	9
Upper Churchway Delf	"	4	2
Lower Churchway Delf	"	2	0
Braizley Delf	"	1	9
Nag's Head, or Weaver's	"	2	9
Whittington Delf	"	2	6
Coleford High Delf	"	5	0
Upper Trenchard	"	2	0
Lower Trenchard	"	1	4

There is a small coal-field north of the Forest of Dean, which is a long narrow strip, containing two and a half square miles, or 1600 acres.—*Maclauchlan, Geological Transactions*, vol. v.

About nine miles and a half to the south of Dean Forest a considerable mass of coal measures has been preserved from destruction, by the denuding causes which have carried off the connecting portion between it and Dean Forest, leaving at least two outlying patches on the north of Chepstow.

The Bristol coal-field occupies about fifty square miles, or 32,000 acres. The seams of coal are very thin in comparison with those which are worked in other districts. Buckland and Coneybeare (Geological Transactions, vol. i) have well described this coal-field.

The total thickness of the whole series of strata in this Bristol coal-field has been shown by De la Beche to be as follows:—

Digitized by Google

Upper shales and limestones	1800 feet, with 10 beds of coal.
Middle sandstone	1725 feet, with 5 beds of coal.
Lower shales	1565 feet, with 36 beds of coal.
Farewell Rock	1200 feet.
	6290

South Wales Coal Field.—The total thickness of the coal strata in this important district is very great. Logan and De la Beche have accumulated evidence which appears to justify the admission of 11,000, or even 12,000 feet thickness from the carboniferous limestone to the highest part of the coal series about Llanelly; in other parts of the field the series is found to be on proportions only less gigantic. The most general view which can be afforded seems thus, giving the true coal measure about 8000 feet:—

	feet.
Llanelly series, with several beds of coal	1000
Penllergare series of shales, sandstones, and beds of coal, 110 beds; 26 beds of coal	3000
Central series (Townhill sandstones of Swansea, Pennant grit of the Bristol field); 62 beds, and 16 beds of coal	3246
Lower shales, coals, and iron-stones (Merthyr); 266 beds, 34 beds of coal	812

Abundance of iron-stone beds and *unionidæ* occur.

Farewell-Rock and Gower shales above; the carboniferous limestone below.

The coal on the north-eastern side of the basin is of a coking quality, excellent for the iron manufacture; on the north-western it contains little or no bitumen, being what is called stone-coal or anthracite; on the south side, from Pontypool to Caermarthen Bay, it is of a bituminous or binding quality.—*Phillips.*

Shropshire.—This district includes the small coal-field of Coalbrook Dale and that of the plain of Shrewsbury. The Coalbrook-Dale field, according to Mr. Prestwick, has some remarkable features. (*Geological Transactions.*) Perhaps there is no coal tract known, which in so small a compass, about twelve miles long, and, at most, three and a half miles wide, exhibits so many curvatures in the outcrops, crossed by so many continuous faults, some varying north by east, others east-north-east; these crossed by many of shorter length, and directed west-north-west, and in several other lines. The total thickness is supposed to be 1000 or 1100 feet, divided into 80 distinct strata. The coal varies in total thickness from 16 feet to 55, and in the number of its beds from 7 to 22, the increase being to the north. The "cleat" or system of joints runs from west-north-west to east-south-east. The coal is, for the most part, of the variety called slate-coal in Scotland, and hard coal in Derbyshire. Cannel coal is rare—sulphureous coal (pyritous) very common. Petroleum abounds in the central and upper part of the field. The beds are mostly thin; the ten uppermost are too sulphureous for other uses than lime burning, and are called stinkers; twelve beds of good coal, in all 25 feet thick, the thickest being five feet, succeed, and the lowest bed of the whole formation, eight inches thick, is sulphureous.—*Phillips, Prestwick.*

Staffordshire.—*The coal-field of South Staffordshire*, which has been described by Mr. J. Beete Jukes, who states, its boundary would be roughly described as the space included within a boundary line drawn from Rugeley through Wolverhampton to Stourbridge; hence to the southern end of the Bromsgrove Lickey, and returning through Harborne (near Birmingham) and Great Barr back to Rugeley. This geologist classes this coal strata in three divisions, by the well traced band of *thick coal.* The total thickness of coal near Dudley being about 57 feet, and between Bilston and Wolverhampton upwards of 70 feet. The thick coal is formed of eight, ten, or thirteen distinguishable parts, the whole seam varying in thickness from three feet to *thirty-nine feet five inches*; it is very irregular in parts, divided by sandstones, splitting with wide-shaped offshoots, and cut into "swiles" or "horse backs," which rise up from the floor. Below the thick coal, are numerous beds of sandstone-shales, coal, and iron-stone, having on the average a thickness of 320 feet; and above the thick coal the thickness is 280 feet on the average.—*Records of the School of Mines.*

North Staffordshire Coal-field.—This field is comprised in the space between Congleton, Newcastle-under-Lyne, and Lane End. About 32 beds of coal have been determined, rising eastward between Burslem in the centre of the field and its eastern limit near Norton church.

Derbyshire and Nottinghamshire.—The Derbyshire and Nottinghamshire coals are classed as to structure in two varieties, as "*hard*" coal, in which the divisional structures are chiefly derived from the planes of stratification, crossed by one set of

Digitized by Google

"cleat" or natural joints (called "slines," "backs," &c.) so that large prismatic masses result; "*soft*" coal where the cleat fissures are numerous, and broken by cross cleat. In respect of the *quality*, some of the coal is of a "crozling" or coking nature, easily fusible and changing its figure by "coking"; the rest (and this is specially the case with the "hard" variety) makes both good furnace coal and excellent coke, which, however, is hardly melted at all, and the masses are not changed in figure by the process.—*Phillips's Manual of Geology.*

The names by which the more important beds of coal worked within this district are known, are as follows: Tupton coal, hard coal, soft coal, black shale or clod coal, low hard coal and low soft, windmill coal, Dansil coal, Ganister coal, Parkgate coal, Aston coal, Kilburn coal, furnace coal, Hazel coal, Eureka coal, main and deep coal.

LEICESTERSHIRE AND WARWICKSHIRE.—The Leicester coal-field is best developed about Ashby de la Zouch (see Mammatt on "the coal-field of Ashby de la Zouch"), where the coal is much like the hard coal of Derbyshire. Amongst the seams of coal is one variety called cannel; and another, formed by the concurrence of more than one band, from seventeen to twenty-one feet in thickness. The beds near Ashby de la Zouch are as follows:—

In the Moira district—

	Thickness of beds.
Eureka coal	4 to 6 feet.
Stocking coal	6 to 7 „
Woodfield coal	5 „
Slate coal	3½ to 4 „
Nether main coal	14 to 15 „
Fourfoot coal	4 to 5 „
The Earl coal	4 ft. 6 in.

In the Coleorton district—

Heath End coal	9 feet.
Lount coal	(3 beds).
Main coal	10 to 12 feet.

The Warwickshire coal-field is from a point east of Tamworth to a point east of Coventry, about twenty miles from N.W. to S.E. parallel to the Ashby coal tracts. The strata are most productive of coal near the southern extremity, where, by the coming together of two seams,—worked separately at Griff,—the five-yard seam is worked. The beds are known as the seven-feet coal and rider, slate coal, two yards, lower seam, cannel, and Ell coal.

YORKSHIRE.—Professor John Phillips gives the following mode of classification as the most natural and convenient for the Yorkshire coal.

Magnesian limestone unconformably covers the coal seams.

Upper coals - { Shales and Badsworth coal. / Ackworth rock. / Wragby and Sharlston coals.

Red rock of Woolley Hooton-Roberts, &c.

Middle coals - { Furnace coals - - Barnsley thick coal. / Intermediate coals - { Rock of Horbury. / Middle coals. / Iron-stone coals - { Silkstone and Flockton beds. / Low Moor coals.

Flagstone rock of Woodhouse, Bradford, Elland, Peniston, &c

Lower coals - { Shales and ganister stone. / Coals. / Shales and ganister stone. / Coals. / Shales, &c.

Millstone grit lies below the "coal series."

The important middle coal series are again divided by Professor Phillips as follows:—

Red rock of Woolley Edge
Furnace coals of Barnsley, &c. *including the eight or ten feet seam.*

Digitized by Google

Iron-stone coals -	Rock of Horbury and Wentworth House. Swift burning coals of Middleton, Dewsbury, &c., with bands of "mussels." Bituminous coals of Silkstone and Low Moor. Flagstone rocks beneath.

The small coal-field of Ingleton and Black Burton in Lonsdale is thrown down on the south side of the great Craven fault.

LANCASHIRE.—The coal-field of Lancashire occupies an area extending from Macclesfield to Colne, 46 miles, and from Torboch, near Liverpool, to Todmorden about 40 miles. Excluding the millstone grit, its area is about 250 square miles.—*Heywood.*

In a line through Worsley, Bury, and Burnley to the limestone shales of Pendle Hill, we have 36 seams of coal, 10 of them not exceeding 1 foot in thickness, making in all 93 feet of coal.

The series is divisible into three parts above the millstone grit.

Upper part, containing a bed of limestone at Ardwick near Manchester.

Middle part, containing the greater part of the thick and valuable seams, especially the cannel coal of Wigan.

Lower part, corresponding to the ganister series of Yorkshire.

CHESHIRE.—The coal-field of Cheshire is not of great importance.

NORTH WALES.—*Flintshire and Denbighshire.*—The Flintshire coal basin extends from north to south, somewhat more than 30 miles from Llanassa to near Oswestry in Shropshire. The coal strata dip generally eastward and form in the northern part a trough beneath the estuary of the Dee. This coal basin in Flintshire commences with beds of shale and sandstone. The coal is of various thickness, from ¾ to 5 yards, and consists of the common, cannel, and peacock varieties.—*Phillips and Conybear.*

CUMBERLAND.—This coal-field extends as a narrow crescent from Whitehaven to near Hesket Newmarket:—around Whitehaven and at Workington the coal is worked extensively. At the latter place, a few years since, a very valuable colliery was destroyed by the bursting in of the sea.

There are three workable seams in the Cumberland coal-field in the neighbourhood of the three undermentioned towns, and these are known in each place by the names given :—

Whitehaven.	Workington.	Maryport.
Bannock band.	Moorbanks.	Ten quarters.
Main band.	Main seam.	Cannel and metal seams (divided with shale from 2 feet to 5 fathoms thick).
Six-quarter coal or Low-bottom seam.	Hamilton seam.	

NORTHUMBERLAND AND DURHAM.—The total thickness of the coal measures of this district is about 1600 feet. The number of distinct layers or beds, as usually noted by the miners, about 600. The total thickness of the beds of coal rarely exceeds —does not on the average equal—60 feet. No bed of coal is of greater thickness, even for a short distance, than 6 or 7 feet; several are so thin as to be of no value at present; but many of these will be worked with profit as soon as a little rise above the present prices occurs. The total thickness of "workable coal," supposing all the beds to be found in a given tract, is not to be estimated at above 20 or 30 feet. The most part of the coal in this great district is of the coking quality, but, in this respect, there is much variation; advantage has been taken of this, in rendering available very large quantities of the dust of coal, and the small coal which formerly was burnt to waste on the pit bank. The best coke for locomotive engines is now made from the lower coals in the Auckland district of Durham, and the Shotley Bridge district of Northumberland. The best "steam coal" is obtained from the north side of the Tyne and the Blyth district. The best "house coal" still comes from the remains of the "High chain" on the Tyne, and from the "Hutton seam" on the Wear; but the collieries north of the Tees have acquired a high reputation.

As a general view of the groups of strata the following summaries may suffice.—(*Foster and Buddle.*)

Upper groups of coal measures, including chiefly thin seams of small value (8 or more) in a vast mass of sandstone in shales, with some iron-stone. At the base is a mussel band; we estimate this at 900 feet.

Digitized by Google

	On the Tyne:—	Ft.	In.
Middle group.	*High main coal*	6	0
	Strata and thin coals	60	0
	Metal coal	1	6
	Strata and thin coals	30	0
	Stone coal	3	0
	Strata	83	0
	Yard coal	3	0
	Strata	90	0
	Bensham seam	3	0
	Strata with several variable beds and some layers of mussels	150	0
	Low main coal	6	0
	Strata	200	0
	Hervey's seam	3	0
	Strata	300	0
	Brockwell seam	3	0
	Strata above millstone grit	200	0

On the Wear and Tyne:—	Ft.	In.	Ft.	In.
Unknown.				
Five-quarter coal	3	9 to 6	9	
Main coal	5	6 to 6	0	
Mandlin seam	4	6 to 6	0	
Low main or Hutton seam	4	6 to 6	6	
Beaumont seam	3	0 to 6	0	
Brockwell seam	3	0 to 6	0	

—*Phillips.*

The seams which are *principally* worked in this district are the high main, five-quarter main, Bensham seam, Hutton seam, Beaumont seam, low five-quarter, three-quarter seam, Brockwell and stone coals. These seams are known by other names, each district usually adopting its own peculiar term to designate the workable seams. Thus the Bensham seam of the Tyne is known as the Mandlin seam of the Wear. The Beaumont or Hervey seam is the Townley seam of the Townley colliery and the main coal of Wylam colliery. At Hetton the high main seam of the Cramlington district separates into two, and is called the three-quarter seam at Pontoss; where it unites again it is known as the Shieldrow seam. The Cramlington grey seam is the metal-coal seam and stone coal seam of Sherriff Hill, where it is divided; while it unites at Hetton and forms the five-quarter seam of that and the Auckland district. The Cramlington yard seam becomes the main coal seam at Hetton, Haswell, and some other localities, the Brass Thill at Pontoss, and the main coal in Auckland. Again the Cramlington five-quarter seam divides and forms the six-quarter, and the five-quarter at Sherriff Hill the Brass Thill seam at Pittington; they again unite and form the Hutton seam at Pontoss colliery, and so with regard to a few others. —*Mineral Statistics.*

Scotland.—"A memoir on the Mid-Lothian and East Lothian coal fields," by David Milne, gives the most exact account of the carboniferous system of Scotland. From the list which has been already given (p. 698) it will be seen that the Scotch coal-field extends from the eastern unto the western shore.

There are three principal coal-basins in Scotland: 1. that of Ayrshire; 2. that of Clydesdale; and 3. that of the valley of the Forth, which runs into the second in the line of the Union Canal. If two lines be drawn, one from Saint Andrews on the north-east coast, to Kilpatrick on the Clyde, and another from Aberlady, in Haddingtonshire, to a point a few miles south of Kirkoswald in Ayrshire, they will include between them the whole space where pitcoal has been discovered and worked in Scotland.

According to Mr. Farey there are 337 principal alterations of strata between the surface in the town of Fisherrow, on the banks of the Frith of Forth (where the highest of these strata occur) and the commencement of the basaltic rocks, forming the general floor and border of this important coal-field. These strata lie internally in the form of a lengthened basin or trough, and consist of sandstone, shale, coal, limestone, ironstone, &c. Sixty-two seams of coal, counting the double seams as one; 7 limestones; 72 assemblages of stone and other strata; in all 5000 feet in thickness.

Professor Phillips remarks of this district, "On the whole, allowing for waste, unattainable portions, and other circumstances, this one district may be admitted as likely to yield to the miner for actual use 2,250 millions of tons of coal." The coal is partly "splint," partly "rough" or "cherry," partly of the "cannel" or "parrot" variety. The first containing most oxygen; the last, most hydrogen and nitrogen, and the least carbon. See Boghead Coal.

Ireland.—The coal measures of Ireland, if we include in this term the millstone grit, occupy large tracts of land in that country, and are upon the whole analogous,

Digitized by Google

in general mineral characters and organic contents, to those of England. The same absence of limestone, the same kind of successions of sandstones and shales is remarked in them. Anthracite or stone-coal like that of South Wales is found in the Leinster and Munster districts; bituminous coal occurs in Connaught and Ulster. In Ulster the principal collieries are at Coal Island and Dungannon. The Munster coal district is stated by Mr. Griffith to be of greater extent than any English coal-field, but, it is much less productive. At Ballycastle the coal is found in connection with basalt.—*Phillips.*

Mr. Hull remarks in his *Coal Fields of Great Britain*, "that Ireland was once covered over two-thirds of its extent by coal-fields, is a proposition which we may confidently affirm on geological grounds; but the misfortunes of the sister isle began long before the landing of Strongbow, for old father Neptune has swept the coal and coal strata clean into his lap, and left little but a bare floor of limestone behind. In plain words, if we examine a geological map of Ireland we shall find that the carboniferous limestone overspreads its greater part; and as we always find in England that this formation is ultimately surmounted by coal measures, so we may infer slate was the same order of succession here, before the sea, which more than once overwhelmed the country after the carboniferous epoch remorselessly swept away the more valuable portion of this system of rocks."

The following general statement of the geological conditions of the coal measures of these islands is from the pen of the late Dr. Ure, as is also the descriptions of the Scotch coal-fields.

The great Carboniferous Formations of these islands may be subdivided into four orders of rocks: 1. the coal measures, including their manifold alternations of coal-beds, sandstones, and shales; 2. the millstone grit and shale towards the bottom of the coal measures; 3. the carboniferous limestone, which, projecting to considerable heights above the outcrop of the coal and grit, acquires the title of mountain limestone; 4. the old red sandstone, or connecting link with the transition and primary rock basin in which the coal system lies.

The coal series usually, but not invariably, consists of a regular alternation of mineral strata deposited in a great concavity or basin, the sides and bottom of which are composed of transition rocks. This arrangement will be clearly understood by inspecting *fig.* 464, which represents a section of the coal-field south of Malmsbury.

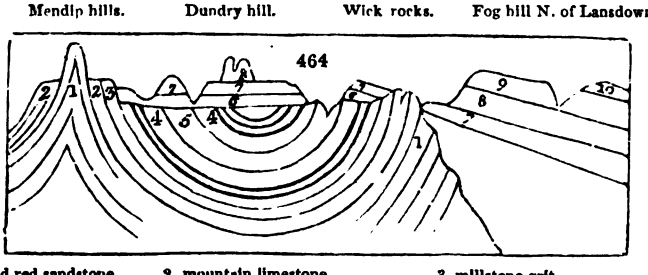

1, 1, old red sandstone. 2, mountain limestone. 3, millstone grit.
4, 4, coal seams. 5, Pennant, or coarse sandstone. 6, new red sandstone, or red marl.
7, 7, lias. 8, 8, inferior oolite. 9, great oolite. 10, cornbrash and Forest marble.

No. 1, or the old red sandstone, may therefore be regarded as the characteristic lining of the coal basins; but this sandstone rests on transition limestone, and this limestone on highly inclined beds of slaty micaceous sandstone which on the one hand alternates with and passes into a coarse breccia, having grains as large as peas; on the other, into a soft argillaceous slate. The micaceous sandstone stands bare on the north-eastern border of the Forest of Dean, near the southern extremity of the chain of transition limestone which extends from Stoke Edith, near Hereford, to Flaxley on the Severn. It is traversed by a defile, through which the road from Gloucester to Ross winds. The abruptness of this pass gives it a wild and mountainous character, and affords the best opportunity of examining the varieties of the rock.

The *limestone* consists in its *lower beds* of fine-grained, tender, extremely argillaceous slate, known in the district by the name of *water-stone*, in consequence of the wet soil that is found wherever it appears at the surface. Calcareous matter is interspersed in it but sparingly. Its *upper beds* consists of shale alternating with extensive beds of stratified limestone. The lowest of the calcareous strata are thin, and alternate with shale. On these repose thicker strata of more compact limestone, often of a dull blue

Digitized by Google

colour. The beds are often dolomitic, which is indicated by straw yellow colour, or dark pink colour, and by the sandy or glimmering aspect of the rock.

The *old red sandstone*, whose limits are so restricted in other parts of England, here occupies an extensive area. The space which it covers, its great thickness, its high inclination, the abrupt character of the surface over which it prevails, and the consequent display of its strata in many natural sections, present, in this district, advantages for studying the formation, which are not to be met with elsewhere in South Britain. In the neighbourhood of Mitchel Dean, the total thickness of this formation, interposed conformably between the transition and mountain limestone, is from 600 to 800 fathoms. The old red sandstone is characterised in its upper portion by the presence of siliceous conglomerate, containing siliceous pebbles, which is applied extensively to the fabrication of millstones near Monmouth, and on the banks of the Wye. This sandstone encircles the Forest with a ring of very elevated ground, whose long and lofty ridges on the eastern frontier overhang the valley of the Severn.

The *mountain or carboniferous limestone*, is distinguished from transition limestone, rather by its position than by any very wide difference in its general character or organic remains. According to the measurements of Mr. Mushet, the total thickness of the mountain limestone in this field is about 120 fathoms. The zone of limestone belonging to this coal-basin, is from a furlong to a mile in breadth on the surface of the ground, according as the dip of the strata is more or less rapid. The angle of dip on the northern and western border is often no more than 10°, but on the eastern it frequently amounts to 80°. The calcareous zone that defines the outer circle of the basin, suffers only one short interruption, scarcely three miles in length, where in consequence of a fault the limestone disappears, and the coal-measures are seen in contact with the old red sandstone.

Coal measures. — Their aggregate thickness amounts, according to Mr. Mushet, to about 500 fathoms. 1. The lowest beds, which repose on the mountain limestone, are about 40 fathoms thick, and consist here, as in the Bristol coal-basin, of a red siliceous grit, alternating with conglomerate, used for millstones; and with clay, occasionally used for ochre. 2. These beds are succeeded by a series about 120 fathoms thick, in which a grey gritstone predominates, alternating in the lower part with shale, and containing 6 seams of coal. The grits are of a fissile character, and are quarried extensively for flag-stone, ashlers, and fire-stone. 3. A bed of grit, 25 fathoms thick, quarried for hearth-stone, separates the preceding series from the following, or the 4th, which is about 115 fathoms thick, and consists of from 12 to 14 seams of coal alternating with shale. 5. To this succeeds a straw-coloured sandstone, nearly 100 fathoms thick, forming a high ridge in the interior of the basin. It contains several thin seams of coal, from 6 to 16 inches in thickness. 6. On this repose a series of about 12 fathoms thick, consisting of 3 seams of coal alternating with shale. 7. This is covered with alternate beds of grit and shale, whose aggregate thickness is about 100 fathoms, occupying a tract in the centre of the basin about 4 miles long, and 2 miles broad. The sandstone No. 5 is probably the equivalent of the Pennant in the preceding figure.

The floor, or pavement, immediately under the coal beds is, almost without exception, a grayish-slate clay, which, when made into bricks, strongly resists the fire. This fire-clay varies in thickness from a fraction of an inch to several fathoms. Clay-ironstone is often disseminated through the shale.

The above description by Dr. Ure holds perfectly correct for the great coal-fields of south-western England, where we have *coal measures*, *millstone grit*, and *mountain limestone* in regular order, the latter being at the base of the system. As we proceed northward to Yorkshire and Northumberland, the limestone begins to alternate with the true coal measures, the two deposits forming together a series of strata about 1000 feet in thickness. To this mixed formation succeeds the great mass of genuine mountain limestone. In Fifeshire, in Scotland, we observe a still greater departure from the type of the south of England, or a more complete intercalation of dense masses of marine limestone, with sandstone and shales containing coal.

At Brora, in Sutherlandshire, we have a coal formation belonging to the lower divisions of the oolite period; and in the north-east of Yorkshire, we have a similar formation.

The Brora coal-field is the most remarkable example in this, or in perhaps any country hitherto investigated, of a pseudo coal-basin among the deeper secondary strata, but above the new sandstone or red marl formation. The Rev. Dr. Buckland and Sir C. Lyell, after visiting it in 1824, had expressed an opinion that the strata there were wholly unconnected with the proper coal formation below the new red sandstone, and were in fact the equivalent of the oolitic series; an opinion fully confirmed by the subsequent researches of Sir R. Murchison. (*Geol. Trans.* for 1827, p. 293.) The Brora coal-field forms a part of those secondary deposits which

Digitized by Google

range along the south-east coast of Sutherlandshire, occupying a narrow tract of about 20 miles in length, and 3 in its greatest breadth.

One stratum of the Brora coal-pit is a coal-shale, composed of a reed-like striated plant of the natural order *Equisetum*, which seems to have contributed largely towards the formation of that variety of coal. From this coal-shale the next transition upwards is into a purer bituminous substance approaching to *jet*, which constitutes the great bed of coal. This is from 3 feet 3 inches to 3 feet 8 inches thick, and is divided nearly in the middle by a thin layer of impure indurated shale charged with pyrites, which, if not carefully excluded from the mass, sometimes occasions spontaneous combustion upon exposure to the atmosphere; and so much indeed is that mineral disseminated throughout the district, that the shales might be generally termed "pyritiferous." Inattention on the part of the workmen, in 1817, in leaving a large quantity of this pyritous matter to accumulate in the pit, occasioned a spontaneous combustion, which was extinguished only by excluding the air; indeed the coal-pit was closed in and remained unworked for four years. The fires broke out again in the pit in 1827.

The purer part of the Brora coal resembles common pitcoal; but its powder has the red ferruginous tinge of pulverised lignites. It may be considered one of the last links between lignite and true coal, approaching very nearly in character to jet, though less tenacious than that mineral; and, when burnt, exhaling but slightly the vegetable odour so peculiar to all imperfectly bituminised substances. The fossil remains of shells and plants prove the Brora coal to be analogous to that of the eastern moorlands of Yorkshire, although the extraordinary thickness of the former, compared with any similar deposit of the latter (which never exceeds from 12 to 17 inches), might have formerly led to the belief that it was a detached and anomalous deposit of true coal, rather than a lignite of any of the formations *above* the new red sandstone: such misconception might more easily arise in the infancy of geology, when the strata were not identified by their fossil organic remains.

On the coast of Yorkshire the strata of this pseudo coal formation appear in the following descending order, from Filey Bay to Whitby. 1. Coral-rag. 2. Calcareous grit. 3. Shale, with fossils of the Oxford clay. 3. Kelloway rock (swelling out into an important arenaceous formation). 5. Cornbrash. 6. Coaly grit of Smith. 7. Pierstone (according to Mr. Smith, the equivalent of the great oolite). 8. Sandstone and shale, with *peculiar plants and various seams of coal.* 9. A bed with fossils of the inferior oolite. 10. Marl-stone? 11. Alum-shale or lias. All the above strata are identified by abundant organic remains.

In the oolitic series, therefore, where the several strata are developed in conformity with the more ordinary type of these formations, we may venture to predict with certainty, that no carboniferous deposits of any great value will ever be discovered, at all events in Great Britain. A want of such knowledge has induced many persons to make trials for coal in beds subordinate to the English oolites, and even superior to them, in places where the type of formation did not offer the least warrant for such attempts.—*Ure.*

Sir Charles Lyell remarks, a rich harvest of fossils has been obtained from the upper carbonaceous shales and sandstones at Gristhorpe, near Scarborough. The lower shales are well exposed in the sea cliffs at Whitby, and are chiefly characterised by *ferns* and *cycadeæ*. They contain also a species of colamite, and a fossil called *Equisetum columnare*, which maintains an upright position in sandstone strata over a wide area. Shells of *Estheria* and *Mico*, collected by Mr. Bean from these Yorkshire coal-bearing beds, point to the estuary or fluviatile origin of the deposit.

The most complete and simplest form of a coal-field is the entire basin-shape, which we find in some instances without a dislocation. An example of this is to be seen at Blairengone, in the county of Perth, immediately adjoining the western boundary of Clackmannanshire, as represented in *fig.* 465, where the outer elliptical line, marked A, B, C, D, represents the crop, outburst, or basset edge of the lower coal, and the inner elliptical line represents the crop or basset edge of the superior coal. *Fig* 466 is the longitudinal section of the line A B; and *fig.* 467, the transverse section of the line C D. All the accompanying coal strata partake of the same form and parallelism. These basins are generally elliptical, sometimes nearly circular, but are often very eccentric, being much greater in length than in breadth; and frequently one side of the basin on the short diameter has a much greater dip than the other, which circumstance throws the trough or lower part of the basin concavity much nearer to the one side than to the other. From this view of one entire basin, it is evident that the dip of the coal strata belonging to it runs in opposite directions, on the opposite sides, and that all the strata regularly crop out, and meet the alluvial cover in every point of the circumferential space, like the edges of a nest of common basins. The waving line marks the river Devon.

Digitized by Google

It is from this basin shape that all the other coal-fields are formed, which are segments of a basin produced by slips, dikes, or dislocations of the strata. If the coal

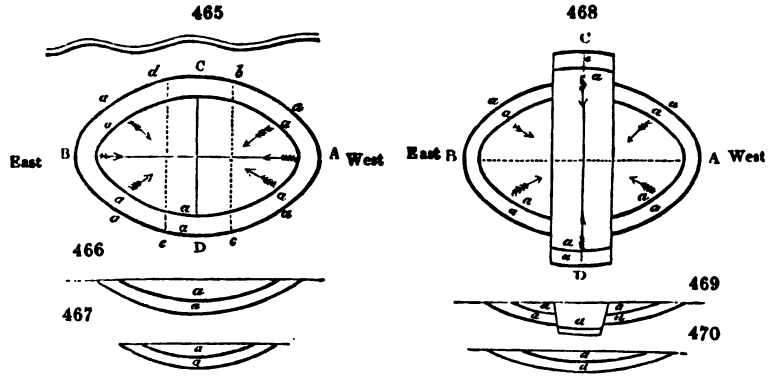

(*fig.* 465) were dislocated by two slips *b c* and *d e*, the slip *b c* throwing the strata *down* to the east, and the slip *d e* throwing them as much *up* in the same direction, the outcrops of the coals would be found in the form represented in *fig.* 468, of which *fig.* 469 is the section in the line A B, and *fig* 470 the section in the line C D.

The absolute shape of the coal-fields in Great Britain has been ascertained with surprising precision. To whatever depth a coal-mine is drained of its water, from that depth it is worked, up to the rise of the water-level line, and each miner continues to advance his room or working-place, till his seam of coal meets the alluvial cover of the outcrop, or is cut off by a dislocation of the strata. In this way the miner travels in succession over every point of his field, and can portray its basin-shape most minutely.

Fig. 471 represents a horizontal plan of the Clackmannanshire coal-field, as if the strata at the outcrop all around were denuded of the alluvial cover. Only two of the concentric beds, or of their edges *a*, *a*, are represented, to avoid perplexity. It is to be remembered, however, that all the series of attendant strata lie parallel to the above line. This plan shows the Ochill mountains, with the north coal-fields, of an oblong elliptical shape, the side of the basin next the mountains being precipitous, as if upheaved by the eruptive trap-rocks; while the south, the east, and the west edges of the basin shelve out at a great distance from the lower part of the concavity or *trough*, as miners call it. Thus the alternate beds of coal, shale, and sandstone, all nearly concentric in the north coal-field, dip inwards from all sides towards the central area of the *trough*. The middle coal-field of this district, however, which is formed by the great north slip, is merely the segment of an elliptical basin, where the strata dip in every direction to the middle or the axis marked with the letter x; being the deepest part of the segment. The south coal-field, formed by the great south slip, is likewise the segment of another elliptical basin, similar in all respects to the middle coal-field. Beyond the outcrop of the coals and subordinate strata of the south coal-fields, the counter dip of the strata takes place, producing the mantle-shaped form; whence the coal strata in the Dunmore field, in Stirlingshire, lie in a direction contrary to those of the south coal-field of Clackmannanshire. o, are the Ochill mountains.

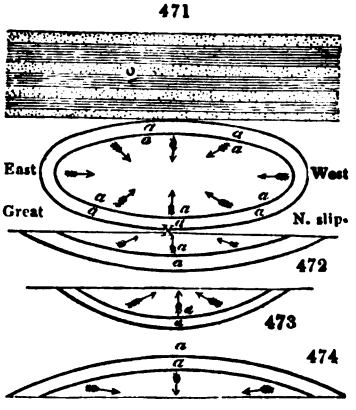

Fig. 475 is a very interesting section of the main coal-basin of Clackmannanshire, as given by Mr. Bald in the Wernerian Society's Memoirs, vol. iii. Here we see it broken into three subordinate coal-fields, formed by two great faults or dislocations of the strata; but independently of these fractures across the whole series, the strata continue quite regular in their respective alternations, and preserve nearly unchanged their angle of inclination to the horizon. The section shows the south coal-field

Digitized by Google

dipping northerly, till it is cut across by the great south slip *x*, which dislocates the coal and the parallel strata to the enormous extent of 1230 feet, by which all the coals have been thrown up, not simply to the day, but are not found again till we advance nearly a mile northward, on the line of the dip, where the identical seams of coal, shale, &c. are observed once more with their regular inclination. These coals of the middle area, dip regularly northward till interrupted by the great north slip *y*, which dislocates the strata, and throws them up 700 feet; that is to say, a line prolonged in the direction of any one well-known seam, will run 700 feet above the line of the same seam as it emerges after the middle slip. Immediately adjoining the north slip, the coals and coal-field resume their course, and dip regularly northward, running through a longer range than either of the other two members of the basin, till they arrive at the valley of the Devon, at the foot of the Ochill mountains, where they form a concave curvature, or trough, *a*, and thence rise rapidly in an almost vertical direction at *b*. Here the coals with all their associate strata, assume conformity and parallelism with the face of the sienitic-greenstone strata of the Ochill mountains *c*, being raised to the high angle of 73 degrees with the horizon. The coal-seams thus upheaved, are called *edge-metals* by the miners.

475

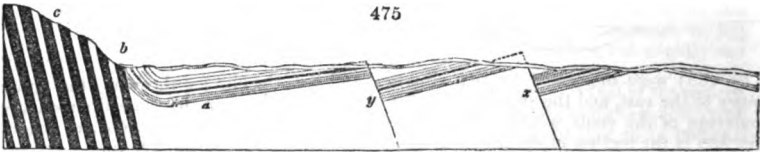

In this remarkable coal-field, which has been accurately explored by pitting and boring to the depth of 703 feet, there are no fewer than 142 beds, or distinct strata of coal, shale, and sandstone, &c., variously alternating, an idea of which may be had by inspecting *fig.* 476. Among these are 24 beds of coal, which would constitute an aggregate thickness of 59 feet 4 inches; the thinnest seam of coal being 2 inches and the thickest 9 feet. The strata of this section contain numerous varieties of sandstone, slate-clay, bituminous shale, indurated clay, or fire-clay, and clay ironstone. Neither trap-rock nor limestone is found in connection with the workable coals; but an immense bed of greenstone, named Abbey Craig, occurs in the western boundary of Clackmannanshire, under which lie regular strata of slate-clay, sandstone, thin beds of limestone, and large spheroidal masses of clay ironstone, with a mixture of lime.

476

"With regard to slips in coal-fields," says Mr. Bald, "we find that there is a general law connected with them as to the position of the dislocated strata, which is this:—When a slip is met with in the course of working the mines—if when looking to it, the vertical line of the slip or fissure, it forms an acute angle with the line of the pavement upon which the observer stands, we are certain that the strata are dislocated downwards upon the other side of the fissure. On the contrary, if the angle formed by the two lines above mentioned is obtuse, we are certain that the strata are dislocated or thrown upwards upon the other side of the fissure. When the angle is 90°, or a right angle, it is altogether uncertain whether the dislocation throws up or down on the opposite side of the slip. When dikes intercept the strata, they generally only separate the strata the width of the dike, without any dislocation, either up or down; so that if a coal is intercepted by a dike, it is found again by running a mine directly forward, corresponding to the angle or inclination of the coal with the horizon."—*Wernerian Society's Memoirs*, vol. iii. p. 133.

477

The Johnstone coal-field, in Renfrewshire, is both singular and interesting. The upper stratum of rock is a mass of compact greenstone or trap, above 100 feet in thickness, not at all in a conformable position with the coal strata, but overlying; next there is a few fathoms of soft sandstone and slate-clay, alternating, and uncommonly soft. Beneath these beds, there are no fewer than 10 seams of coal, lying on each other, with a few divisions of dark indurated clay. These coal-seams have an aggregate thickness of no less than 100 feet; a mass of combustible matter, in the form of coal, unparalleled for its accumulation in so narrow a space. The greater part of this field contains only 5 beds of coal; but at the place where the section shown in *fig.* 477 is taken, these 5 coals seem to have been overlapped or made to slide over each other by violence. This structure is represented in *fig.* 478, which is a section of the Quarrelton coal in the Johnstone field, showing the over-

Digitized by Google

lapped coal and the double coal, with the thick bed of greenstone, overlying the coal field.

478

a. Alluvial cover.
b. Bed of trap or greenstone.
c. Alternating coal strata.
d. Coal-seams.
e. Position of greenstone, not ascertained.
f. Strata in which no coals have been found.
g. The overlapped coal.
h. The double coal.

Fig. 479 is intended to represent an extensive district of country, containing a great coal-basin, divided into numerous subordinate coal-fields by dislocations. The lines marked *b* are slips, or faults; the broad lines marked *c* denote dikes: the former dislocate the strata, and change their level, while dikes disjoin the strata with a wall, but do not in general affect their elevation. The two parallel lines marked *a*, represent two seams of coal, variously heaved up and down by the faults; whereas the dikes are seen to pass through the strata without altering their relative position. In this manner partial coal-fields are distributed over a wide area of country, in every direction.

479

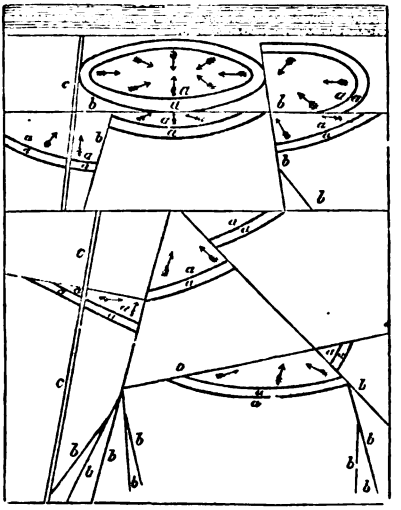

Fig. 480 is an instance of a convex coal-field exhibited in Staffordshire, at the Castle-hill, close to the town of Dudley. 1, 1, are limestone strata; 2, 2, are coal. Through this hill, canals have been cut, for working the immense beds of carboniferous limestone. These occur in the lower series of the strata of the coal-field, and therefore at a distance of many miles from the Castle-hill, beyond the outcrop of all the workable coals in the proper basin-shaped part of the field; but by this apparently inverted basin-form, these limestone beds are elevated far above the level of the general surface of the country, and consequently above the level of all the coals. We must regard this seeming inversion as resulting from the approximation of two coal-basins, separated by the basset edges of their mountain limestone repository.

481

480

Fig. 481 is a vertical section of the Dudley coal-basin, the upper coal-bed of which has the astonishing thickness of 30 feet; and this mass extends 7 miles in length, and 4 in breadth. Coal-seams 5 or 6 feet thick, are called *thin* in that district.

For a very satisfactory description of the coal-field of South Staffordshire, the reader is referred to a memoir, "On the geology of the South Staffordshire coal-field," by J. Beete Jukes, published in the "Records of the School of Mines."

It is not possible in the present work to enter into any further description of the coal-fields of this country. In the selections which have been made, striking types have been chosen, which are sufficiently characteristic to serve the purposes of general illustration. There are many variations from the conditions which have been described, but these are due to disturbances which have taken place either since the formation of the coal, or during the period of the actual deposition of the coal.

Digitized by Google

Foreign Coal-Fields.

We have not yet arrived at the period when we could pronounce with any approach to certainty on the actual number of coal basins in the world; the total number must, however, amount to at least from 250 to 300 principal coal fields, and many of these are subdivided by the disturbed position of the strata into subordinate basins.

The basins or coal areas may be, however, grouped into a comparatively small number of districts, and even many of these are little known and not at all measured. The greater number occur in Western Europe and Eastern North America, while Central and Southern Africa, South America, and a large part of Asia, are almost without any trace of true carboniferous rocks.

The principal coal-fields of Europe, are those of Belgium, France, Spain (in the Asturias), Germany (on the Rhur and Saare), Bohemia, Silesia, and Russia (on the Donetz).

Belgium.—The Belgian-coal-field is the most important, and occupies two districts; that of Liége and that of Hainault, the former containing 100,000 and the latter 200,000 acres. In each the number of coal seams is very considerable, but the beds are thin and so much disturbed as to require special modes of working. The quality of coal is very various, including one peculiar kind, the Flenu coal, unlike any found in Great Britain, except at Swansea. It burns rapidly with much flame and smoke, not giving out an intense heat, and having a somewhat disagreeable smell. There are nearly fifty seams of this coal in the Mons district. No iron has been found with the coal of Belgium.

Mr. Dunn, H.M. Inspector of Collieries, has reported on the coal of Belgium: and first quoting a report which announces that the mines would be exhausted in twenty years, says "This announcement comes with appalling force upon the numerous joint-stock companies. * * * According to the report of M. Briavionne, Belgium is traversing towards a momentous crisis; and I am much inclined to confirm the writer's opinion that, according to the present plan of carrying on the collieries, notwithstanding the high price received for the coals, yet that coal will not be found workable, to profit, below the depth of 250 or 260 fathoms, inasmuch as the deeper they go the more destructive and unmanageable will be the effects of the pressure."—*The Government Mining-Engineer's Report.*

Belgium is traversed, in a direction from nearly west-south-west to east-north-east by a large zone of bituminous coal formation. The entire region is generally described under two principal divisions.

1. The western or Hainault division, comprising
   - *a.* The two basins known as Levant and Couchant of Mons.
     That of Charleroi.
   - *b.* The basin of Namur.
2. The eastern or Liége division.

Netherlands. There is only one coal-mine in Holland. It is situated in the province of Limburg.

France.—The most important coal-fields of France are those of the basin of Loire and those of St. Etienne, which are the best known and largest, comprising about 50,000 acres. In this basin are eighteen beds of bituminous coal, and in the immediate neighbourhood several smaller basins containing anthracite. Other valuable localities are in Alsace, several in Burgundy worked by very deep pits, and of considerable extent; some in Auvergne with coal of various qualities; some in Languedoc and Provence with good coal; Others at Arveyron; others at Limosin; and some in Normandy. Besides these there are several others of smaller dimensions and less extent, whose resources have not yet been developed. The total area of coal in France has not been ascertained, but is probably not less than 2000 square miles The annual production now, 1865, exceeds 11,000,000 tons. But the coal of France is of an inferior description; and, therefore, when good and strong coals are required, the supply is obtained from the English coal-fields. The mineral combustibles of France were estimated in 1864 by the Government engineers as follows:—

	Tons.
Anthracites	800,000
Hard coal—short flame	1,400,000
Forging coal	600,000
Bituminous coal—long flame	4,000,000
Soft coal—long flame	3,000,000
Lignites	200,000
	10,000,000

Digitized by Google

SPAIN.—Spain contains a large quantity of coal, both bituminous and anthracite The richest beds are in Asturias, and the measures are so broken and altered as to be worked by almost vertical shafts through the beds themselves. In one place upwards of 11 distinct seams have been worked, the thickest of which is nearly 14 feet. The exact area is not known, but it has been estimated by a French engineer that about 12,000,000 of tons might be readily extracted from one property, without touching the portion existing at great depths. In several parts of the province the coal is now worked, and the measures seem to resemble those of the coal districts generally. The whole coal area is said to be the largest in Europe, presenting upwards of 100 workable seams, varying from 3 to 12 feet in thickness.

The Asturias Mining Company are working many mines in this region, and they are said to produce 400,000 tons annually, or to be capable of doing so. In Catalonia and in the Basque provinces of Biscay there is found anthracite and bituminous coals.

In the Balearic islands also coal exists.

PORTUGAL.—Beds of lignite and some anthracite are known to exist, but the production of either is small.

ITALY.—The principal coal mines of Italy are in Savoy and near Genoa. In the Apennines some coal is found, and in the valley of the Po are large deposits of good lignite and a small quantity of good coal is worked in Sardinia.

SWITZERLAND.—Coal has only been found in the cantons of Berne, Fribourg, and the Valais. Beds of anthracite coal are developed in the central and western Alps.

GERMANY.—The Germanic Union—the Zollverein—embraces the following principal coal-beds :—

German States { Saxony. Bavaria. Duchy of Hesse.

Prussian States. { La Ruhr, in Westphalia. Silesia Saarbrück, and provinces of the Bas Rhin.

The true coal of Prussian Silesia stretches for a distance of seventeen leagues. The most recent information we have been able to obtain as to its production, would appear to give above 850,000 English tons. The coal-fields of Westphalia were described by Sedgwick and Murchison in 1840. The productive coal-beds are on the right bank of the Rhine, and possess many features in common with the English coal-fields. Bituminous wood, and lignite or brown coal occur extensively in some districts. The coal basin of Saarbrück, a Rhenish province belonging to Prussia, has thus been described by Humboldt, chiefly from a communication received from M. Von Dechen :—

"The depth of the coal measures at Mont St. Gilles, Liège, I have estimated at 3650 feet below the surface, and 3250 feet below the sea level. The coal basin at Mons lies fully 1750 feet deeper. These depressions, however, are trifling when compared with that of the coal strata of the Saar rivers (Saarbrück). After repeated trials I have found that the lowest coal strata known in the county of Duttweiler, near Bettingen, north-eastward from Saar-louis, dip 19,406 feet, and 20,656 under the level of the sea."

The coal of the *valley of the Glane* is bituminous, and of good quality; it is procurable at a depth of 112 feet, and the seam is about two feet in thickness: about 50,000 tons annually are produced from this valley. Coal is found in Wurtemburg, but not much worked. In Saxony are extensive mines of bituminous coal; at Schonfield, near Zivickau, the coal alternates with porphyry. Near Dresden a bituminous coal is also worked, and the coke manufactured from it is used in the metallurgical works at Freiburg.

Electoral Hesse produces little beyond lignite. In Hesse Cassel some bituminous coal is worked, but to a very inconsiderable extent. Real stone coal is only as yet produced in the county of Schaumburg. It is rich in beds of brown coal.

In the *Thuringerwald* or Thuringian forest some coal is produced.

GRAND DUCHY OF BADEN.—There are at present only three coal-mines in the Grand Duchy of Baden, one at Berghaupten in the district (Bezirksamt). of Gengenbach, another at Zunsweier, in the district of Offenburg, and a third at Diersburg in the same district.

HANOVER.—The most considerable quantity of Hanoverian coal is found some miles south of the capital, in the mountains called Deister and Osterwald, also at Suntel, in the neighbourhood of Osnabrück.

BAVARIA.—Coal and brown coal are produced in Bavaria, from Amberg,

Digitized by Google

Bodenmais, Bodenwöhr, Königshütte, Kissingen, Munich, Southofen, Steben, Wundsiedel, Fichtelberg, Rhein Palatinate.

POLAND.—There are several coal mines in Poland. The crown coal mines produce about 1,000,000 sacks of 3½ bushels. The coal-mines of the western district produce 8,000,000 lbs. per annum.

HUNGARY and other countries in the east of Europe contain true coal measures of the carboniferous period; but the resources of these districts are not at present developed. On the banks of the Donetz, in Russia, coal is worked to some extent, and is of excellent quality.

AUSTRIA.—Coal occurs in Styria, Carinthia, Dalmatia, the Tyrol, Moravia, Lombardy, and Venice; but 700,000 tons appears to be the maximum annual produce of the empire. The basin of Vienna, in Lower Austria, produces several varieties of coal, which belong to the brown coal of the tertiary period.

BOHEMIA.—In this kingdom coals are abundant: one coal-field occupies a length of 15 leagues, and a breadth of from 4 to 5 leagues. Between 300,000 and 400,000 tons are produced annually.

SWEDEN.—Anthracite is found in small quantities at Dannemora; and bituminous coal is worked at Helsingborg, at the entrance of the Baltic.

DENMARK.—The island of Bornholm and some other islands belonging to Denmark produce coal, but it would appear to belong to the Bovey coal variety.

RUSSIA.—The Donetz coal-field is the most important. In that extensive district many good seams, according to Sir R. I. Murchison, of both bituminous and anthracitic coal exist.

TURKEY.—Coal is found bordering on the Carpathian mountains, in Servia, Roumelia, and Bulgaria.

The coal of Heraclia, on the south coast of the Black Sea, in Anatolia, has been, since the Crimean war, exciting much attention.

SMYRNA.—Moderately good coal is found at Nazli near Olidin. There are other coal mines of very inferior quality.

GREECE.—There is no coal, properly so called, known to exist in Greece, but lignite has been found in several places.

NORTH AMERICA.—There are in North America four principal coal areas; compared with which the richest deposits of other countries are comparatively insignicant. These are the great central coal-fields of the Alleghanies; the coal-fields of Illinois, and the basin of the Ohio; that of the basin of the Missouri; and those of Nova Scotia, New Brunswick, and Cape Breton. Besides, there are many smaller coal areas which, in other countries, might well take rank as of vast national importance, and which even in North America will one day contribute greatly to the riches of various states.

The Alleghany or Appalachian coal-field measures 750 miles in length, with a mean breadth of 85 miles, and traverses eight of the principal states in the American Union. Its whole area is estimated at not less than 65,000 square miles, or upwards of 40,000 square acres. The coal is bituminous and used for gas.

Coal has been found in Louisiana, on the Iberville rivers, and on the shores of Lake Bistineau: it is also reported as having been found at Lake Borgne—but this is probably a lignite. In Kentucky both bituminous and cannel coal are worked in seams about 3 or 4 feet thick, the cannel being sometimes associated with the bituminous coal as a portion of the same seam; and there are in addition valuable bands of iron ore (*the argillaceous carbonate*). The coal-field of Kentucky extends over about 9000 square miles. In Western Virginia there are several coal-fields of variable thickness, one, 9½ feet; two others of 5, and others of 3 or 4 feet. On the whole there seems to be at least 40 feet of coal distributed in 13 seams. In the Ohio district the whole coal-field affords on an average at least 6 feet of coal. The Maryland district is less extensive, but is remarkable as containing the best and most useful coal, which is worked now to some extent at Frostbury. There appears to be about 30 feet of good coal in 4 seams, besides many others of less importance. The quality is intermediate between bituminous and anthracite, and is considered well adapted for iron making. Lastly, in Pennsylvania there are generally from two to five workable beds, yielding on an average 10 feet of workable coal. and amongst them is one bed traceable for no less than 450 miles, consisting of bituminous coal, its thickness being from 12 to 14 feet on the south-eastern border, but gradually diminishing to 5 or 6 feet. Besides the bituminous coal there are in Pennsylvania the largest anthracite deposits in the States, occupying as much as 250,000 acres, and divided into three principal districts.

The Illinois coal-field, in the plain of the Mississippi, is only second in importance to the vast area already described. There are four principal divisions traceable, of which the first, or Indian district, contains several seams of bituminous coal, distributed over an area of nearly 8000 square miles. It is of excellent quality for many pur-

Digitized by Google

poses; one kind burning with much light and very freely, approaching cannel coal in some of its properties; other kinds consist of caking or splint coal. In addition to the Indian coal-field there appears to be as much as 48,000 square miles of coal area in other divisions of the Illinois district, although these are less known and not at present much worked. 30,000 are in the state of Illinois, which supplies coal of excellent quality, and with great facility. The coal is generally bituminous.

The third great coal area of the United States is that of the Missouri, which is little known at present, although certainly of great importance.

Taylor states that at least one-eighth of the State of Missouri is overlaid by coal measures. 6000 square miles are assigned to the coal-fields of Missouri. Bituminous coal is stated to have been found in the Arkansas valley, and brown coal and lignite in abundance in the Upper Missouri valley.

The anthracite coal-fields of Pennsylvania are divided into three great districts, viz.: 1st, Southern or Schuylkill district embracing the Lehigh and Lykens' valley coal; 2nd, The middle district embracing the Beaver Meadow, Shamokin and Trevorton coal; the 3rd, Northern or Wyoming and Lackawama embracing the Scranton, Pittston and Lackawama coals.

Produce of these districts from 1858 *to* 1863.

	Schuylkill District.	Middle District.	Wyoming District.	Total.
	Tons.	Tons.	Tons.	Tons.
1858	3,212,879	909,000	2,186,094	6,524,838
1859	3,598,531	1,050,659	2,731,236	7,517,516
1860	3,815,822	1,091,032	2,856,896	8,059,017
1861	3,114,254	994,705	2,918,458	7,487,672
1862	3,549,844	396,227	3,130,887	7,640,905
1863	4,151,882	609,558	3,760,374	9,420,135

Total produce of Pensylvania in 1864.

	Tons.
Anthracite districts - - - - -	9,876,174
Broad top and semi-anthracite - - -	422,992
Bituminous districts - - - - -	2,399,246
	12,698,412

Coal product of the Loyal United States, year ending June 1864, from the returns made to the Internal Revenue Department.

	Tons.		Tons.
Rhode Island - - -	3,656	Indiana - - - -	146,787
Pennsylvania - - -	12,698,412	Illinois - - - -	925,293
Maryland - - - -	787,269	Michigan - - -	16,296
District Columbia - -	742	Minnesota - - -	50,204
Western Virginia - -	398,815	Kansas - - - -	236
Kentucky - - -	91,036	California - - -	44,938
Missouri - - - -	66,187	Washington Territory -	7,754
Ohio - - - -	1,324,685		16,472,410

British America contains coal in the provinces of New Brunswick and Nova Scotia. The former presents 3 coal-fields, occupying in all no less than 8000 square miles; the latter exhibits several very distinct localities where the coal abounds. The New Brunswick coal measures include not only shales and sandstones, as is usual with such deposits, but bands of lignite impregnated with various copper ores, and coated by green carbonate of copper. The coal is generally in thin seams lying horizontally. It is chiefly or entirely bituminous.

Nova Scotia possesses three coal regions, of which the Northern presents a total thickness of no less than 14,570 feet of measures, having 70 seams whose aggregate magnitude is only 44 feet, the thickest beds being less than 4 feet. The Pictou or central district, has a thickness of 7590 feet of strata, but the coal is far more abundant, one seam measuring nearly 30 feet; and part of the coal being of excellent quality and adapted for steam purposes. The southern area is of less importance. Besides the Nova-Scotia coal-fields there are three others at Cape Breton, yielding different kinds of coal, of which one, the Sydney coal, is admirably adapted for domestic purposes. There are here 14 seams above 3 feet thick, one being 11, and one 9 feet.

Digitized by Google

NEWFOUNDLAND COAL-FIELD.—This field is estimated at about 5000 square miles. According to Mr. Jukes, now Director of the Geological Survey in Ireland, the entire western side of the island, along a space of 356 miles in breadth, is occupied by secondary and carboniferous rocks. The coal on the south-western point of the island has been traced at intervals, along a space of 150 to 200 miles to the north-east.

GREENLAND.—Captain Scoresby discovered a regular coal formation here. At Hasen Island Bovey or brown coal has been found, and also at Disco Island on the western coast.

ARCTIC OCEAN.—At Byam Martin's Island coal formations exist—and at Melville Island several varieties of coal have been discovered, much of it being of an anthracitic or of a semi-anthracitic character. We learn that at Prince Regent's Inlet indications of coal have been observed.

RUSSIAN AMERICA.—Beyond the icy cape and at Point Barrow, coal was observed on the beach; and it has been found by digging but a few feet below the surface at Point Franklin.

OREGON TERRITORY.—Coal has been discovered and worked in Wallamette valley, nearly 100 miles above Oregon City; and anthracite has been observed by Sir George Simpson about 30 miles up one of the tributaries of the Columbia river.

UNITED STATES OF COLOMBIA.—Immense deposits of cannel coal have been discovered in the Province Rio Hacha.

CALIFORNIA.—Colonel Fremont states that a coal formation exists in Upper California, North lat. 41½°, and West long. 107½°. "The position of this coal formation is in the centre of the Rocky Mountain chain, and its elevation is 6820 feet above the level of the sea. In some of the coal seams the coal did not appear to be perfectly mineralised, and in others it was compact and remarkably lustrous."—*Fremont's Report.* 1843.

In 1847 a coal mine was discovered near San Luis Obisco, North lat. 35°. There are three coal mines within 300 miles of Monterey.

MEXICO.—On Salado river coal is worked by an American company. A coal formation 50 miles in breadth crosses the Rio Grande from Texas into Mexico at Loredo, and on the Mexican shore, within 200 yards of the Rio Grande, a remarkably fine vein of coal 8 feet thick occurs.

TEXAS.—Coal is known to exist in Texas, though the country has not been geologically examined. The "Trinity Coal and Mining Company" was incorporated by the Texan Congress in 1840, who worked both anthracite and a semi-bituminous coal. Kennedy in his work "*Texas, its geography, &c.*," says, "Coal, both anthracite and bituminous, abounds from the Trinity River to the Rio Grande."

SOUTH AMERICA.—In the republic of New Granada, especially at Santa Fè de Bogota, coal occurs: also in the island of Santa Clara, and brown coal in the province of Panama.

VENEZUELA is said to contain coal, but whether brown or bituminous coal does not appear certain.

PERU appears to possess some coal, but a fossil charcoal of considerable value is more abundant.

CHILI.—The coal of this district, has been examined by many American engineers, and by Captains Fitzroy and Beechy and Mr. Darwin. In 1844 upwards of 20 coal mines were open in the neighbourhood of Conception. At Tulcahnano a new seam of 4½ feet was proved. The coal is described by W. R. Johnson as, "in external appearance nearly related to many of the richest bituminous coals of America and Europe;" and Mr. Wheelwright, in his report on the mines and coal of Chili, says, "in fact, the whole southern country is nothing but a mine of coal."

BRAZIL does not possess much coal of value. There are a few lignites.

THE WEST INDIAN ISLANDS.—Cuba, in the vicinity of Havannah, produces a kind of asphaltum much resembling coal, the analysis of which gives, carbon 34·97, volatile matter 63·00, ashes 2·03. At New Havannah a similar combustible is found; but it contains 71·84 of carbon. True coal does not appear to have been found in Jamaica. Sir H. de la Beche, *Trans. Geological Society of London*, describes three or four thin seams of coal imbedded in shale near the north-eastern extremity of the island.

BARBADOES.—Bitumen is found plentifully; and, on Grove Plantation estate, a good coal is stated to have been found.

TRINIDAD.—The pitch lake of this island is well known. Near it, and it is believed, extending under it, a true coal of superior quality is worked.

INDIA.—From the Memoirs of the Geological Survey of India, we extract the following anthracitic information.

Digitized by Google

Production of Coal in India.

Districts.	1858.	1859.	1860.
Runnigang Coal Field - - - -	5,917,000	8,949,600	8,559,097
Rajmahal Hills - - - - -	219,000	843,000	1,222,860
Kurhrbari - - - - - -	4,000	108,182	275,256
Palamow - - - - - - -	- -	28,648	30,900
Syhlet Hills - - - - - -	2,2319	32,498	- -
Total in Mannels - - - -	6,162,319	9,961,928	1,0088113
Or in Tons - - - - -	226,140	365,575	370,206

Of the Singrowli coal-field, which lies to the south of the river Sone, in the Rewah territory, Dr. Oldham states that he has not been able to procure any return, but that he is aware that the amount of coal raised has been small, and will not affect the general total. More than one bed of coal has been practically examined in the continuation of this field to the west and towards Singapoor. But none of these are as yet at work as collieries. The Nerbudda Valley has long been known to contain coal, but owing to the distance from any available market, and the comparative inaccessibility of the localities where it occurs, it has not been hitherto economised. The Nerbudda Coal and Iron Company have this year commenced their operations and I suppose will shortly be turning out coal.

In other parts of the north western provinces territory there is no known workable coal. Seams of lignite of very irregular size, and very limited extent occur in several places along the foot of the Sub-Himalayas, marking a certain group of sandstone rocks, of comparatively recent date: but nowhere are these deposits known to be of extent rendering it probable they will ever be of any practical use.

In Oude no coal is known to occur. In the Punjaub no coal is known to occur, if we except as above in the north-western provinces, the patches of lignite which have been found in several localities along the base of the outer Himalaya, as well as in the Salt Range.

In Scinde the only coal raised was that of Synah Valley, as given above, but the irregularity and the small extent of this deposit has caused it to be abandoned. It was, in fact, an irregular patch of *lignite*.

In Bombay no coal is known to occur. In Hyderabad none. In Nagpore a small coal-field is known near to Muret, on the border of the Nerbudda District, which may, in fact, be considered in continuation (although actually separated) of the Nerbudda deposits. The coal is not now economised.

In Madras no coal is known. Coal has been more than once stated to occur on the Godavery, or some of its feeders, and even very recently; but as yet nothing but black shales, which will not support combustion, and which are, in all probability, of a totally different age from the coal-bearing rocks of India, have been met with.

New South Wales.—Running down the rivers Bremer and Brisbane to the town of Brisbane, numerous outcrops of coal may be seen in the banks. Several works are situated about half way between Ipswich and Brisbane. This coal is of much importance to the steam navigation of Moreton Bay. In the parish of Maggil several collieries are established. "The coal varies from five to six feet in thickness dipping south forty degrees east, angle from seven to eight degrees, although not worked to its whole thickness, excepting where they wanted head room for the 'horse way.' The main coal separates from the top coal at about four feet; the two feet of the top coal is good, but mixed with a small quantity of earth." (*Stuchbury*). This Geological surveyor has given, in his report, several sections of the coal on either side of the Bremer river.

The number of coal mines, their produce and value being:—

In 1861, 18 mines produced 342,068 tons, valued at 218,821*l.*; in 1862, 33 mines produced 476,522 tons, valued at 305,235*l.*; and in 1863, 20 mines produced 433,889 tons, valued at 236,231*l.*

New South Wales *exported*, in 1861, 207,820 tons; in 1862, 308,782 tons; and in 1863, 298,337 tons.

Queensland in 1863 *exported* 4,228 tons. The produce of the collieries being in 1861, 14,212 tons; in 1862, 24,067 tons; and in 1863, 2,400 tons.

From these sources the other Australian colonies received as follows:

In 1863 Victoria received from the other Australian possessions 110,521 tons.

In 1863 South Australia received from New South Wales, 35,187 tons. Other Australian possessions 77 tons.

Digitized by Google

In 1863 TASMANIA received from New South Wales, 6,368 tons of coal: Victoria 175 tons of coal: New Zealand 40 tons.

NEW ZEALAND received, principally from New South Wales, 61,192 tons.

JAPAN. In Japan coal-fields are worked in the districts of Kiusin and Nippon.

BORNEO. In the province of Labuan on the north-west coast, there is abundance of coal of good quality. The seam is generally 9 feet in thickness. The coal found here burns fast and emits a bright flame; it soon acquires a red heat, and continues in this state until it smoulders into a white ash, like that of wood; there is not much smoke from it. For several years past the coal mines of Moara have ceased to be worked.

CHINA. There appears to be much good coal in China. It is procured from a mine on the river Yang-tse-kiang, about 400 miles from its mouth; of the other coal-producing districts we know little.

Consul Braune in his report to Sir F. Bruce, says, writing from Tamsuy, January 21, 1864: "It is to the coal mines of Kelung that we must look to the future prosperity of this place as a port of trade; a depôt has been already established there by a large firm to supply their own steamer, running on the coast."

In 1863 there were exported from the port of Tamsuy, in British vessels, 10,801 piculs of 133 lbs. avoirdupois; in foreign vessels, 1,259,152 cotties of 1⅓ lbs. avoirdupois; also from the port of Tien-tsin, 180 tons, value 1800 taels, of 6*s.* 4½*d.* each.

Mr. Consul Mongan's report for 1864 on the trade of Tien-tsin, says: "I allude to coal, extensive mines of which exist in the mountains to the north and west of Peking. It costs about 16*s.* per ton at the pit's mouth, and more than double this amount per ton is paid for transport to the coast; but the mines are worked in the rudest way, and the little coal which finds its way from the western range of Tien-tsin is conveyed on mules or camels from the mountains to Tang-chow on the Peiho, and thence down the river in boats to this port. From the mines in the northern range, there is water communication of an indifferent kind to Tien-tsin, but the quality of their coal is much inferior to that which comes from the western mountains.

HEATING POWER OF BRITISH COAL.

The calorific values of a variety of coals, as tried under the circumstances considered the most favourable for the development of heat, will be found in the following Table:—

Name or Locality of Coal.	Actual Number of lbs. of Water converted into Steam by 1 lb. of Coal.	Number of lbs. of Water converted into Steam by the Coke left by the Coal.	Total Number of lbs. of Water convertible into Steam by 1 lb. of the Coal.	Amount of Ammonia corresponding to the Nitrogen contained in the Coal.	Amount of Sulphate of Ammonia corresponding to the Nitrogen contained in the Coal.
	Practical.	Theoretical.	Theoretical.		
Graigola	9·35	11·301	13·563	0·497	1·932
Anthracite, Jones and Co.	9·46	12·554	14 593	0·225	0·990
Old Castle Fiery Vein	8·94	10·601	14·936	1·590	6·175
Ward's Fiery Vein	9·40	—	14·614	1·238	4·808
Binea	9·94	11·560	15·093	1·586	6·741
Llangenneck	8·86	10·599	14·260	1 299	5·044
Pontrepoth	8·72	10·873	14·838	0·218	0·848
Pontrefellin	6·36	10 841	13·787	a trace	—
Powell's Duffryn	10·149	11·134	15·092	1 76	6·835
Mynydd Newydd	9 52	9·831	14·904	1·808	7·340
Three-Quarter Rock Vein	8·84	7·081	13·106	1·299	5 044
Cwm Frood Rock Vein	8·70	8·628	14·788	1·347	5·232
Cwm Nanty Gros	8·42	8 243	13·932	1 919	7·448
Resolven	9·53	10·234	13·971	1 675	6 505
Pontypool	7·47	8·144	14·295	1·639	6·364
Bedwas	9·79	8·897	14·841	1·748	6·788
Ebbw Vale	10·21	10·441	15·635	2·622	10 182
Porth Mawr Rock Vein	7·53	6·647	12 811	1·554	6 033
Colshill	8·0	6·468	12 799	1·785	6·930
Dalkeith Jewel Seam	7·08	6·239	12·313	1·214	0·471
Dalkeith Coronation	7·71	6·924	12·772	a trace	—
Wallsend Elgin	8·46	6·560	13·422	1 712	6·647
Fordel Splint	7·56	6·560	13 817	1·372	5·327
Grangemouth	7·40	7·292	13·692	1·639	6·364
Broomhill	7·30	7·711	14 863	2·234	8·674
Park End Lydney	8·52	6·567	13·257	1·477	9·617
Slievardagh	9·85	10·895	12·482	0·279	1·084

This Table, in connection with those which will be found under FUEL, will place clearly before all who are interested in the question of the heating power of coals, the values of a great variety of British and Foreign coals and fuels.

An inquiry was instituted at the instance of Joseph Hume, Esq., M.P., who recommended the Admiralty to determine, as the Americans had done, the calorific value of the fuel used in the Steam Navy. The result of the experimental examination will be found in three reports furnished to the Government by Sir Henry de la Beche and Dr. Lyon Playfair.

Digitized by Google

The following Table, which has been constructed from these Reports, shows

The Mean Composition of average Samples of Coals.

Name of Coal.	Specific Gravity.	Carbon.	Hydrogen.	Nitrogen.	Sulphur.	Oxygen.	Ash.	Per-centage of Coke left by each Coal.
SOUTH WALES:—								
Ebbw Vale	1·275	89·78	5·15	2·16	1·02	0·39	1·50	77·5
Merthyr	1·30	90·12	4·33	1·00	0·85	2·02	1·68	86·53
Bedwas	1·32	80·61	6·01	1·44	3·50	1·50	6·94	71·7
Plymouth Work	1·35	88·49	4·00	0·46	0·84	3·82	2·39	82·25
Resolven	1·32	79·33	4·75	1·38	5·07	included in ash.	9·41	83·9
Neath Abbey	1·31	89·04	5·05	1·07	1·60	- -	3·55	61·42
Llynvi	1·28	87·18	5·06	0·86	1·33	2·53	3·04	72·94
Llangennech	1·312	85·46	4·20	1·07	0·29	2·44	6·54	83·69
Pontypool	1·32	80·70	5·66	1·35	2·39	4·38	5·52	64·8
NEWCASTLE:—								
Willington	- -	86·81	4·96	1·05	0·88	5·22	1·08	72·19
Haswell Wallsend	1·286	83·47	6·68	1·42	0·06	8·17	0·20	62·70
Hedley's Hartley	1·31	80·26	5·28	1·16	1·78	2·40	9·12	72·31
Carr's Hartley	1·25	79·83	5·11	1·17	0·82	7·86	5·21	60·63
N. Percy Hartley	1·25	80·03	5·08	0·98	0·78	9·91	3·22	57·18
Broomhill	1·25	81·70	6·17	1·84	2·85	4·37	3·07	59·20
DERBYSHIRE:—								
Elsecar	1·296	81·93	4·85	1·27	0·91	8·58	2·46	61·6
Park Gate	1·311	80·07	4·92	2·15	1·11	9·95	1·80	61·7
Butterley Portland	1·301	80·41	4·65	1·59	0·86	11·26	1·23	60·9
Staveley	1·27	79·85	4·84	1·23	0·72	10·96	2·40	57·86
LANCASHIRE:—								
Ince Hall Arley	1·272	82·61	5·86	1·76	0·80	7·44	1·53	64·0
Balcarres Arley	1·26	83·54	5·24	0·98	1·05	5·87	3·32	62·89
Pemberton Yard	1·348	80·78	6·23	1·30	1·82	7·53	2·34	60·6
Rushy Park Mine	1·28	77·76	5·23	1·32	1·01	8·99	5·69	56·66
Cannel Wigan	1·23	79·23	6·08	1·18	1·43	7·24	4·84	60·33
Balcarres, 5-feet	1·26	74·21	5·03	0·77	2·09	8·69	9·21	55·90
Moss Hall New Mine	1·278	77·50	5·84	0·98	1·36	12·16	3·16	57·7
SCOTCH:—								
Wallsend Elgin	1·20	76·09	5·22	1·41	1·51	5·05	10·70	58·45
Dalkeith Coronation	1·316	76·94	5·20	trace	0·38	14·37	3·10	53·5
Eglinton	1·25	80·08	6·50	1·55	1·38	8·05	2·44	54·94
Dalkeith Jewel Seam	1·277	74·55	5·14	0·10	0·33	15·51	4·37	49·8
Grangemouth	1·29	79·85	5·28	1·35	1·42	8·58	3·52	56·6
SUNDRY:—								
Bagilt	1·269	88·48	5·62	2·02	1·36	0·86	1·62	55·8
Ewlowe	1·275	80·97	4·96	1·10	1·40	8·20	3·37	54·5
Ibstock	1·291	74·97	4·83	0·88	1·45	11·88	5·99	50·8
BORNEO:—								
Labuan	1·28	64·52	4·74	0·80	1·45	20·75	7·74	
Three-feet Seam	1·37	54·31	5·03	0·98	1·14	24·22	14·32	
Eleven-feet Seam	1·21	70·30	5·41	0·67	1·17	19·19	3·23	
VAN DIEMEN'S LAND:—								
Tingal	- -	57·21	3·58	1·20	1·32	7·80	29·09	
Tasman's Peninsula	- -	65·54	3·36	1·91	1·03	1·75	26·41	
Whale's Head	- -	65·86	3·18	1·12	1·14	7·20	21·50	
Adventure Bay	- -	80·22	3·05	1·36	1·90	4·80	8·67	
SYDNEY	- -	82·39	5·32	1·23	0·70	8·32	2·04	
FORMOSA	1·24	78·26	5·70	0·64	0·49	10·95	3·96	
VANCOUVER'S ISLAND	- -	66·93	5·32	1·02	2·20	8·70	15·83	
CONCEPTION BAY	1·29	70·55	5·76	0·95	1·98	13·24	7·52	
TRINIDAD	- -	65·20	4·25	1·33	0·69	21·69	6·84	

Digitized by Google

Detailed Statement of the Production of Coal in the United Kingdom.

	1862	1863	1864	1865
	Tons.	Tons.	Tons.	Tons.
Northumberland and Durham	19,360,356	22,154,146	23,248,367	25,032,694
Cumberland	1,330,287	1,327,368	1,380,795	1,431,047
Yorkshire	9,255,500	9,402,500	8,809,600	9,355,100
Derbyshire	4,534,800	4,550,750	4,470,750	4,595,750
Nottinghamshire	732,666	750,000	796,700	1,095,500
Leicestershire	696,024	805,750	890,500	965,500
Warwickshire	678,000	685,500	754,000	859,000
Staffordshire / Worcestershire	7,522,750	7,870,320	11,459,851	12,200,989
Lancashire	10,597,500	10,875,500	11,530,000	11,962,000
Cheshire	787,750	822,750	822,750	850,000
Gloucestershire / Somersetshire / Devonshire	1,750,000	1,950,000	1,950,000	1,875,000
Shropshire	1,029,750	1,150,000	1,150,000	1,135,000
Monmouthshire	3,750,000	4,075,000	4,028,500	4,125,000
South Wales	6,749,455	6,917,081	6,948,000	7,911,507
North Wales	1,660,000	1,728,000	1,987,060	1,983,000
Scotland	11,076,000	11,100,500	12,400,000	12,650,000
Ireland	127,500	127,050	125,000	123,500
Total produce of the United Kingdom	81,638,338	86,292,215	92,787,873	98,150,587

The number of Collieries at work, and the production of Coal in the United Kingdom since 1854, with the quantities exported.

	Number of collieries at work.	Tons of coal raised.	Tons of coal exported.
1854	2,397	64,661,401	4,309,255
1855	2,613	64,453,079	4,976,902
1856	2,829	66,645,450	5,879,779
1857	2,867	65,394,707	6,737,718
1858	2,958	65,008,649	6,529,483
1859	2,948	71,979,763	7,006,949
1860	3,009	80,042,698	7,412,575
1861	3,052	85,635,214	7,851,234
1862	3,088	83,638,338	7,671,670
1863	3,160	88,292,215	8,275,212
1864	3,268	92,787,873	8,809,908
1865	3,614	98,150,587	9,170,477

Coals used in the Manufacture of Iron, and left for general Consumption.

Year.	Make of Pig Iron.	Pig Iron Exported.	Pig Iron left to be converted into Bar Iron.	Total of Coals used in Iron Manufacture.*	Coals left to be consumed for all other Purposes.	After Coal Consumption for Iron Manufacture leaves for each Head of the Population.			
	Tons.	Tons.	Tons.	Tons.	Tons.	Tons.	cwts.	qrs.	lbs.
1859	3,712,904	316,376	3,396,528	22,517,080	42,335,436	1	17	0	13
1860	3,826,752	342,566	3,484,186	23,152,279	49,449,162	2	3	0	12
1861	3,712,390	388,004	3,324,346	22,273,762	55,383,267	2	7	3	3
1862	3,943,469	444,454	3,499,015	23,552,107	51,650,879	2	4	0	13
1863	4,510,040	466,275	4,024,765	27,013,082	52,877,171	2	5	2	23
1864	4,767,951	465,985	4,301,966	28,715,439	55,137,526	2	6	0	3
1865	4,819,254	543,018	4,276,236	28,783,052	59,197,058	2	9	0	8

* This is estimated at 3 tons of coal for Blast Furnaces, Engine Fires, and all other purposes—in producing one ton of Pig Iron; and 3 tons 7 cwt. for converting each ton of PIG IRON into Finished Iron, every operation included.

Digitized by Google

The following detailed List of the Collieries of the United Kingdom is corrected from the Returns of the Inspectors of Coal Mines, up to the end of 1865.

Districts.	Number of Collieries in District.	Number of Collieries in County.
ENGLAND.		
NORTHUMBERLAND and DURHAM:—		
Tyne, Blyth, and Coquet	75	
South of Tyne	24	
Wear and Seaham	34	
Tees, Hartlepool, and Stockton	87	
Landsale collieries in all the districts	69	289
CUMBERLAND:—		
Whitehaven, &c.	30	30
YORKSHIRE:		
Leeds	101	
Bradford	52	
Huddersfield	39	
Barnsley	42	
Halifax	33	
Wakefield	45	
Rotherham	23	
Sheffield	28	
Dewsbury	25	
Penistone, Pontefract, Bingley, and Settle	33	421
DERBYSHIRE:—		
Chesterfield	78	
Alfreton	30	
Ripley	9	
Buxton and Stockport	13	
Ilkeston	13	
Burton-on-Trent	10	153
NOTTINGHAMSHIRE:—		
Nottingham, Mansfield	21	
WARWICKSHIRE:		
Coventry, Tamworth, &c.	16	16
LEICESTERSHIRE:—		
Leicester and Ashby	10	10
STAFFORDSHIRE, NORTH:—		
Cheadle	23	
Longton	23	
Hanley	9	
Burslem	17	
Tunstall	16	
Biddulph	10	
Newcastle-under-Lyne	26	124
STAFFORDSHIRE, SOUTH:—		
Ruxeley	5	
Wyrley	21	
Walsall	52	
Darlaston	10	
Bilston	75	
Willenhall	33	
Wolverhampton	31	
Sedgeley	17	
Tipton	29	
Rowley Regis	24	
Oldbury	32	
West Bromwich	53	
Wednesbury	24	
Corngreaves	34	
Dudley	54	
Brierley Hill, &c.	21	506
WORCESTERSHIRE	8	8
LANCASHIRE:—		
Manchester	276	
St. Helens	22	
Wigan	78	376
CHESHIRE:—		
Macclesfield, Stockport, &c.	39	39
SHROPSHIRE:—		
Shrewsbury, Wellington, &c.	66	66
GLOUCESTERSHIRE:—		
Forest of Dean, &c.	94	94
SOMERSETSHIRE:—		
Radstock, Bristol, &c.	37	37
DEVONSHIRE:—		
Bideford and Newton	2	2
NORTH WALES.		
FLINTSHIRE:—		
Mold, Flint, &c.	42	42
DENBIGHSHIRE:		
Wrexham, Ruabon, &c.	37	37
ANGLESEA:—		
Berw	5	5
SOUTH WALES.		
PEMBROKESHIRE:		
Haverfordwest and Tenby	20	20
CAERMARTHENSHIRE:—		
Llanelly	80	80
GLAMORGANSHIRE:—		
Swansea, Neath, &c.	233	233
MONMOUTHSHIRE:—		
Newport, &c.	85	85
SCOTLAND:—		
LANARKSHIRE:—		
Glasgow	14	
Lesmahagow	37	
Rutherglen	10	
Shettleston	4	
Wishaw		
Ballieston	18	
Holytown	21	
Coatbridge	14	
Motherwell	9	
Airdrie	49	176
AYRSHIRE:—		
Ayr	14	
Irvine	24	
Kilmarnoch	35	
New and Old Cumnoch	28	101
STIRLINGSHIRE:—		
Kilsyth, &c.	23	
Falkirk, &c.	25	48
DUMBARTONSHIRE:		
Dumbarton, &c.	17	17
RENFREWSHIRE:—		
Paisley, &c.	11	11
DUMFRIESSHIRE:—		
Dumfries	4	4
FIFESHIRE:—		
Kirkaldy, &c.	34	
Cupar	15	49
CLACKMANNANSHIRE:—		
Alloa	8	8
HADDINGTONSHIRE:—		
Tranent	14	14
EDINBURGHSHIRE:—		
Dalkeith, &c.	16	16
LINLITHGOWSHIRE:—		
Bathgate, &c.	20	20
PEEBLESSHIRE:—		
Peebles	1	1
PERTHSHIRE:		
Dumblane	3	3
IRELAND.		
ULSTER COAL-FIELD:		
County of Antrim	2	
" Tyrone	3	
" Cavan	1	
Lough Allen District.		
Counties of Leitrim, Sligo, and Roscommon	7	13
LEINSTER COAL-FIELD:		
Castlecomer District.		
County of Kilkenny	14	
Carlow and Queen's Counties	3	
Queen's County	17	34
MUNSTER COAL-FIELD:—		
Slieve Ardagh District.		
County of Tipperary	19	
County of Cork	3	22
Kanturk District.		
County of Limerick, &c.	7	
Limerick District.		
ARGYLESHIRE	1	1
KINROSSSHIRE	2	2

Digitized by Google

In concluding this notice of mineral fuel, it may be worth while to draw attention to the vast and overwhelming importance of the subject, by a reference both to the absolute and relative value of the material, especially in the British Islands. It may be stated as probably within the true limit, if we take the annual produce of the British coal mines at 98,000,000 tons, the value of which is not less than 24,500,000*l.* sterling at the pit's mouth; which may be estimated at the place of consumption,—and therefore including a certain amount of transport cost necessary to render available the raw material—at more than 33,000,000*l.* The capital employed in the coal trade is now estimated at 22,500,000*l.* We have, therefore, the following summary, which will not be without interest:—

Value of the coal annually raised in Great Britain, estimated at the pit mouth	24,500,000*l.*
Mean annual value at the place of consumption	33,000,000*l.*
Capital engaged in the coal trade	22,500,000*l.*
Mean annual value, at the furnace, of pig iron produced by British coal	11,770,000*l.*

COAL BRASS. This name is given to the iron pyrites (*sulphide of iron*), found in the coal measures, and which are employed in Yorkshire, and on the Tyne in the manufacture of copperas, the protosulphate of iron, and also in the alkali works, for the sulphur they contain. See SULPHUR, ORES.

The iron ores called Brass, occurring in the coal measures of South Wales, were particularly described by E. Chambers Nicholson and David S. Price, Ph. D., F.C.S., at the meeting of the British Association at Glasgow. Their remarks and analyses were as follows:—

"There are three kinds of ores to which the name brass is applied; they are considered to be an inferior class of ore, and are even rejected by some iron-masters. One is compact, heavy, and black, from the admixture of coaly matter, and exhibits, when broken, a coarsely pisiform fracture. A second is compact and crystalline, not unlike the darkest-coloured mountain limestone of South Wales in appearance. The third is similar in structure to the first-named variety; the granules, consisting of iron pyrites, are mixed with coaly matter, and cemented together by a mineral substance, similar in composition to the foregoing ores. It is from the yellow colour of this variety that the name brass has been assigned to the ores by the miners.

"The ores have respectively the following composition:

	I.	II.	III.
Carbonate of iron	68·71	59·73	17·74
Carbonate of manganese	0·42	0·37	
Carbonate of lime	9·36	11·80	14·19
Carbonate of magnesia	11·80	15·55	12·06
Iron pyrites	0·22	trace	49·72
Phosphoric acid	0·17	0·23	
Coaly matter	8·87	9·80	6·10
Clay	—	2·70	
	99·55	100·18	99·81

"It is unnecessary to allude to the third variety; as an iron-making material, its colour admits of its being at all times separated from the others. The pyrites which it contains, we may remark, is bisulphuret of iron.

"It is to the ores I. and II. that we would direct attention. The reason of their having hitherto been comparatively disregarded may be attributed either to their having been mistaken for the so-called brass of coal, or to their being difficult to work in the blast-furnace in the ordinary manner, through the belief that they were similar in constitution to the argillaceous ores of the district. It will be seen from the above analyses that they are varieties of spathic iron ore, in which the manganese has been replaced by other bases. If treated judiciously, they would smelt with facility, and afford an iron equal to that produced from the argillaceous ores. From the large amount of lime and magnesia which they contain, their employment must be advantageous in an economic point of view.

"An interesting feature in these ores is their fusibility during calcination on the large scale. When this process is conducted in heaps, the centre portions are invariably melted. This, considering the almost entire absence of silica, is apparently

Digitized by Google

an unexpected result. The fused mass is entirely magnetic and crystalline. Treated with acids, it dissolves with great evolution of heat.

The following is its composition :—

Protoxide of iron	38·28
Sesquioxide of iron	32·50
Protoxide of manganese	0·38
Lime	12·84
Magnesia	13·87
Phosphoric acid	0·17
Sulphur	0·23
Silicic acid	1·20
Alumina	0·51
	99·98

"From the above analysis, it is probable that the fusibility of the compound is owing to the magnetic oxide of iron acting the part of an acid. When thoroughly calcined and unfused, the ores retain their original form; and if exposed to the air for any length of time crumble to powder from the absorption of water by the alkaline earths."

COAL CUTTING MACHINES. See Boring and Rock Cutting Machines.

COAL-GAS. Although the employment of gas for illuminating purposes can be traced back to remote periods of antiquity, yet the substantial history of this application may be related in few words. In various places and at different times issues of inflammable gas from the earth have been observed; the holy fires at Baku on the shores of the Caspian Sea, and those of Pietra Mala in Italy are instances; but such issues have usually been only regarded with superstitious dread by the ignorant people who have observed them. The Chinese alone, if we are to believe the accounts of that boastful people, have many centuries ago turned these natural sources of inflammable gas to useful account, and have rendered them available both for heating and illuminating purposes. Abundant sources of inflammable gas exist in the coal districts of this country; and in some localities, as at Chat Moss in Lancashire for instance, so easy is this gas procurable, that it is only necessary to plunge an iron rod a few yards deep into the soft peat, and then on its withdrawal to insert a tin tube, in order to secure a copious discharge of gas, which is evolved in a continuous stream at a high pressure and apparently for an unlimited period of time. But as this gas consists of nearly pure light carburetted hydrogen, and contains no luminiferous constituent, it yields scarcely any light when burnt in the ordinary manner, and cannot therefore be rendered available for illuminating purposes. It has, however, been successfully employed as a source of heat, and a jet of it was long made use of as the sole fuel to heat a four-horse boiler used for agricultural purposes. As early as the year 1659 Mr. Thomas Shirley communicated to the Royal Society a paper describing some experiments upon an inflammable gas issuing from a well near Wigan in Lancashire, and nearly a century later the Rev. John Clayton, having noticed the same phenomenon in the same locality, and finding on digging a few feet into the soil, that the gas issued from a bed of coal, he was led to try whether a similar gas could not be obtained artificially, by exposing coal to heat in close vessels. He succeeded in obtaining an illuminating gas, and amused his friends by collecting it in bladders and burning it from a hole pricked in the bladder. The particulars of these experiments Mr. Clayton communicated to the Royal Society in the year 1739. But he does not appear to have thought of applying his discovery to any practical purpose, and it was not until 1792 that the gas thus artificially obtained was used for illumination by Mr. Murdock, who first lighted his house and office at Redruth in Cornwall, and afterwards, having made several improvements in the apparatus, he lighted the factory of Messrs. Boulton and Watt at Soho about the year 1804, and in 1805 the large cotton mills of Messrs. Philips and Lee at Manchester; those of Mr. Lodge at Halifax having been lighted about the same time by Mr. Clegg, a gentleman to whose energy and scientific skill gas lighting, in its earlier stages especially, is much indebted. In the year 1810 the Act of Parliament incorporating the London and Westminister Chartered Gas-light and Coke Company was passed, and on the 31st of December 1813, Westminister Bridge was lighted with gas. This step was soon followed by the introduction of gas in the place of oil, in several of the chief thoroughfares of the metropolis. From that period the progress of this branch of the chemical arts has been extremely rapid and satisfactory, so far at least as the extension of the manufacture and the improvement of the mechanical part of the process are concerned. Nevertheless, although the methods employed for the generation and purification of gas have been rendered more economical, it can hardly be said that the average of the gas, supplied to con-

Digitized by Google

sumers in London and the provincial towns, is either purer or better in quality than that furnished in the earlier years of the manufacture.

Before proceeding to describe the actual processes now employed for the generation of illuminating gas, it will be advisable to consider briefly the general scientific principles involved in those processes, and especially the chemical relations of the materials employed for the generation and purification of illuminating gas, together with the bearings of chemistry upon the operations of generating, purifying, and burning such gas.

The chemistry of gas-manufacture.—The chief materials employed in the manufacture of gas for illuminating purposes are, coal, oil, resin, peat, and wood. These materials, although very dissimilar in appearance, do not essentially differ from each other in their chemical constituents, they may all be regarded as consisting chiefly of the elements, carbon, hydrogen, and oxygen, and their value for the production of illuminating gas increases with the increase of the proportion of hydrogen, and with the diminution of the relative amount of oxygen. Accordingly we find that oil and resin generally produce gas larger in volume and better in quality than coal, whilst peat and wood, owing to the large proportion of oxygen which they contain, are greatly inferior to coal for the purposes of the gas manufacturer. The relative proportions of carbon, hydrogen, and oxygen, in the organic part of these substances, is seen from the following comparison:

	Percentage of Carbon.	Percentage of Hydrogen.	Percentage of Oxygen.
Cannel (Boghead)	80·35	11·21	6·71
Cannel (Wigan)	85·95	5·75	8·14
Coal	88·15	5·26	5·41
Oil	78·90	10·97	10·13
Resin	79·47	9·93	10·59
Peat	60·41	5·57	34·02
Wood	50·00	5·55	44·45

In addition to the three essential constituents above mentioned most of these materials contain small and variable proportions of sulphur, nitrogen and inorganic matter, the latter constituting, when the substance is burnt, what we term *ash*. When these substances are heated to redness, they undergo decomposition, a considerable quantity of inflammable gases and vapours being evolved, whilst a residue, consisting of carbon, or of carbon and ash, remains behind in the solid form. When atmospheric air has free access during this heating operation, the inflammable gases and vapours burn with a more or less bright flame, as in a common fire; whilst the carbonaceous residue continues afterwards to glow, until nearly the whole of the carbon is consumed. If, however, the application of heat be made without access of air, by inclosing the materials for instance in an iron retort provided only with an outlet for the escape of gases, the decomposition goes on in much the same manner as before, but the various products formed, being no longer exposed to the simultaneous action of atmospheric oxygen, do not undergo combustion; the inflammable gases and vapours are evolved through the outlet pipe in an unburnt condition, and the carbonaceous residue also remains unconsumed in the retort. Upon cooling the gases and vapours thus evolved, the latter condense more or less into liquids which separate into two layers, the lower one forming a dense black oily fluid, commonly known as tar, and containing several solid hydrocarbons partly in solution and partly in suspension; whilst the other one consists chiefly of an aqueous solution of salts of ammonia, if the organic matters operated upon contained nitrogen. Thus the volatile products of this process of *destructive distillation* consist of solids, liquids, and gases. These constituents may be thus tabulated:

I. Gaseous.

Name.	Chemical formula.
Hydrogen	H
Light carburetted hydrogen	C^2H^4
Carbonic oxide	CO
Olefiant gas	C^4H^4
Propylene	C^6H^6
Butylene	C^8H^8
Carbonic acid	CO^2
Sulphuretted hydrogen	SH
Nitrogen	N

Digitized by Google

II. Liquid.

	Name.	Chemical formula.
Aqueous layer: —	Water	HO
Oily layer: —	Bisulphide of carbon	CS^2
,,	Benzol	$C^{12}H^6$
,,	Toluol	$C^{14}H^8$
,,	Cumol	$C^{18}H^{12}$
,,	Cymol	$C^{20}H^{14}$
,,	Aniline	$C^{12}H^7N$
,,	Picoline	$C^{12}H^7N$
,,	Leucoline	$C^{18}H^9N$
,,	Carbolic acid	$C^{12}H^6O^2$
,,	Other hydrocarbons	CnHn *
,,	,, ,,	CnHn + 2
,,	,, ,,	CnHn − 6

III. Solid.

	Name.	Chemical formula.
In aqueous layer: —	Carbonate of ammonia	NH^4OCO^2
,,	Hydrosulphate of sulphide of ammonium	$NH^4S + HS$
,,	Sulphite of ammonia	NH^4OSO^2
,,	Chloride of ammonium	NH^4Cl
In oily layer: —	Paraffine	$C^{36}H^{32}$
,,	Naphthaline	$C^{20}H^8$
,,	Paranaphthaline	$C^{20}H^{12}$
,,	Pyrene	$C^{32}H^8$
,,	Chrysene	$C^{36}H^{16}$

In practice, there is not such a perfect separation of the products as is represented in the above table: thus a small proportion of the gases dissolves in the liquid products, whilst most of the liquids, and even some of the solids, diffuse themselves in the form of vapour, to a certain extent, into the gases; and the solids are in most cases almost completely dissolved in the liquids. The relative proportions also in which these products occur greatly depend upon the temperature employed in the destructive distillation, and the length of time during which the volatile products are exposed to it; a low temperature and short exposure favouring the formation of solids and liquids, whilst a higher heat and longer exposure determine the production of a larger proportion of gases at the expense of the solids and liquids.

The usual process of gas-making consists in exposing coal or cannel to a bright-red heat, in close vessels of convenient size and shape, until all, or the greater part, of the volatile matter is expelled. Coke is the material left in the retort, and the matters volatilised consist of condensible vapours, and of permanent gases more or less saturated with these vapours. By a simple process of refrigeration nearly the whole of the vapours may be readily condensed, thus separating the gases more or less perfectly from the liquid and solid products of the distillation. But this preliminary process of purification leaves the gases still in a state totally unfitted for use in the production of artificial light. They still retain constituents, which are either noxious in themselves, or generate noxious compounds when they are burnt, such as sulphuretted hydrogen, sulphide of ammonium, carbonate of ammonia, and bisulphide of carbon. They also contain carbonic acid, which greatly diminishes the amount of light yielded by the illuminating gases with which it is mixed.

Besides these injurious ingredients, which may be conveniently included in the term *impurities*, there are others which do not contribute anything to the illuminating power of the mixture, and which may be denominated *diluents*. We can thus classify the constituents of coal-gas as follows:—

Illuminating Ingredients.	Diluents.	Impurities.
Olefiant gas. Propylene. Butylene. Hydrocarbon vapours of the formulæ CnHn and CnH(n−6). Vapours of hydrocarbons of the formula CnH(n−12).	Hydrogen. Light carburetted hydrogen. Carbonic oxide.	Sulphuretted hydrogen. Hydrosulphate of sulphide of ammonium. Carbonate of ammonia. Carbonic acid. Vapour of bisulphide of carbon. Nitrogen. Oxygen. Aqueous vapour.

* Here n means an even number, as 2, 4, 6, &c.

Digitized by Google

As the intelligent manufacture of gas for illuminating purposes requires a knowledge of the leading properties of the compounds included under the three heads just mentioned, we will now proceed briefly to describe them.

I. Illuminating Ingredients.

Olefiant gas.—This gas has been proved by Berthelot to exist in coal-gas, and it is probably always a constituent of the illuminating gases from resin, oil, peat, and wood. It is occasionally, though rarely, met with in nature, as a product of the action of volcanic heat upon coal-bearing strata; it never occurs, however, in coal strata under ordinary circumstances, and no trace of it has ever been met with amongst the gases issuing from the coal strata of this country, and which have been investigated by Graham, Playfair, and others. Olefiant gas can be prepared nearly pure by heating in a glass retort a mixture of 1 part by weight of alcohol, and 6 parts of oil of vitriol. The gas must be passed through solution of caustic soda, to remove sulphurous and carbonic acids with which it is generally contaminated.

Olefiant gas is colourless, and possesses a peculiar and slightly unpleasant odour. Its specific gravity is rather less than that of atmospheric air, being ·9784: 100 cubic inches, at 60° F. and 30 inches barometrical pressure, weigh 30·3418 grains. It consists of two volumes of carbon vapour and four volumes of hydrogen, the six volumes being condensed to two. It contains, in a given bulk, exactly twice as much carbon as is contained in light carburetted hydrogen. Olefiant gas is inflammable, but does not support combustion: when inflamed as it issues from a jet into the atmosphere, it burns with a white flame, emitting a very brilliant light without smoke. In burning, it consumes three times its volume of oxygen, and produces twice its volume of carbonic acid. Exposed to a full red heat, as in passing through a red-hot tube, it is rapidly decomposed, carbon being deposited, whilst hydrogen and light carburetted hydrogen are produced; exposure to a full red heat consequently soon entirely destroys its illuminating power.

Propylene and butylene.—The first of these highly illuminating constituents of coal-gas may be obtained by passing the vapour of *fusel oil* through a red-hot tube, and the second by the electric decomposition of valerate of potash. Both these gases are colourless, possess a slight ethereal odour, and burn with a brilliant white flame. Like olefiant gas, they are rapidly decomposed at a bright red heat, depositing much carbon, and being converted into the non-illuminating gases — hydrogen and light carburetted hydrogen. Propylene consists of three volumes of carbon vapour and six volumes of hydrogen condensed to two volumes. It therefore contains, in a given volume, one-half more carbon than olefiant gas. Its specific gravity is 1·4511.

Butylene consists of four volumes of carbon vapour and eight volumes of hydrogen, the twelve volumes being condensed to two; it consequently contains, in a given volume, twice as much carbon as olefiant gas. Its specific gravity is 1·9348.

Vapours of hydrocarbons of the form CnHn.—A considerable number of compounds having this formula are known to exist in coal-tar, and, as many of them are very volatile, they must be diffused as vapours in coal-gas; but as they have not yet been successfully disentangled from each other, no account of their individual properties can be given; they all, however, contain more carbon in a given volume than butylene, and must therefore contribute, proportionally to their volume, a greater illuminating power than any of the gaseous hydrocarbons. They are all readily decomposed at a bright-red heat, chiefly into carbon and non-illuminating gases.

Vapours of hydrocarbons of the formula CnH(n−6).—These consist chiefly of benzol, toluol, cumol, and cymol, compounds which, being components of the more volatile portion of the tar, diffuse themselves into the gaseous products of distillation, contributing in no inconsiderable degree to the total illuminating effect of the gas. The composition of these substances has been already given in the Table; and it is therefore only necessary here to remark, that benzol vapour contains, in a given volume, three times as much carbon as olefiant gas, whilst the vapours of toluol, cumol, and cymol contain respectively $3\frac{1}{2}$, $4\frac{1}{2}$, and 5 times the amount of carbon contained in olefiant gas. For a further account of these and the following hydrocarbons, see Naphtha Coal, Destructive Distillation.

Vapours of hydrocarbons of the formula CnH(n−12).—The only vapour of this composition known to be present in coal-gas is naphthaline ($C^{20}H^{8}$), which, although a solid at ordinary temperatures, yet emits a considerable quantity of vapour; in fact, its presence occasions to a great extent the peculiar odour of coal-gas.

Naphthaline is a frequent source of serious annoyance to the gas manufacturer, by condensing in the street mains and gradually blocking them up, or so narrowing their bore as to prevent the passage of the needful supply of gas. This effect can only be produced, when the gas charged with naphthaline vapour is allowed to leave the holder at a temperature higher than that of the mains through which it subsequently flows;

Digitized by Google

but as this cannot always be avoided, the prevention of such deposits might perhaps be best effected by passing the gas over a large surface of coal oil before it is led into the mains. The oil would absorb so much of the naphthaline as to prevent any subsequent deposition. The vapour of naphthaline contains, in an equal volume, five times as much carbon as olefiant gas. The amount of light yielded by these illuminating constituents is directly proportionate to the amount of carbon contained in an equal volume of each; taking, therefore, the illuminating power of olefiant gas as unity, the following numbers exhibit the relative illuminating values of equal volumes of the several luminiferous constituents of gas:—

Propylene	1·5	Benzol	3·0
Butylene	2·0	Toluol	3·5
Amylene	2·5	Heptylene	3·5
Hydride of amyl	2·5	Cumol	4·0
Hydride of hexyl	3·0	Cymol	5·0
Hexylene	3·0	Naphthaline	5·0

II. Diluents.

Hydrogen.— This element constitutes one ninth of the total weight of the waters of our globe, and with one or two unimportant exceptions, enters into the composition of all animal and vegetable substances and of the products derived from them, as peat, coal, oils, bitumen, &c. It is however very rarely met with in nature in a free or uncombined state; having hitherto only been thus found in the gases emitted from volcanoes.

Hydrogen gas may be obtained in abundance and nearly pure by passing steam over iron, zinc, and several other metals, in a fine state of division, at a full red heat. Mixed with carbonic oxide and carbonic acid gases, it is also generated in large quantity when steam is passed over charcoal, coke, or other carbonaceous substances at a red heat. In all these cases the watery vapour is decomposed, its hydrogen being liberated, whilst its oxygen unites with the metal or carbon, forming in the first case a solid non-volatile oxide, which encrusts the pure metal, and soon stops further action; in the second case a gaseous oxide of carbon is generated, and passes off along with the hydrogen, thus leaving the carbon freely exposed to the further action of the watery vapour. When carbon is used that portion of the steam which is converted into hydrogen and carbonic oxide yields its own volume of each of these gases; and that portion which forms hydrogen and carbonic acid affords its own volume of hydrogen and half its own volume of carbonic acid. The amount of watery vapour which undergoes the latter decomposition decreases as the temperature at which the operation is conducted increases. At a white heat scarcely a trace of carbonic acid is produced.

Hydrogen is the lightest of all known bodies, its specific gravity being only ·0691; 100 cubic inches, at 60° Fahr. and 30 inches barometric pressure, weigh only 2·1371 grains. It has a powerful affinity for oxygen, but developes scarcely any light during combustion; when, however, solid substances, such as lime, magnesia, or platinum, are held in the flame of hydrogen, considerable light is emitted. Burnt in air or oxygen gas, it is entirely converted into watery vapour, which condenses upon cold surfaces held above the flame.

Light carburetted hydrogen.—This gas consists of carbon and hydrogen in the proportion of 6 parts by weight of the former element combined with 2 parts of the latter. Owing to its being copiously generated in marshy swampy places, it is frequently termed *marsh gas*, and from certain considerations relative to its chemical constitution, it has more recently received the name of *hydride of methyl*. It enters largely into the composition of coal-gas, and is also a natural product of the slow decomposition of coal, and of putrefaction in general. Thus it occurs in enormous quantities in the coal strata, and bubbles up from stagnant pools and ditches which contain putrefying organic remains. As thus generated, it is mixed with small quantities of carbonic acid and nitrogen; it can, however, be artificially prepared perfectly pure, but the processes need not be described here.

Light carburetted hydrogen when pure is colourless, tasteless, and inodorous; it is neutral to test papers, and nearly insoluble in water; its specific gravity is ·5594. and 100 cubic inches, at 60° Fahr. and 30 inches barometric pressure, weigh 17·4166 grains. It does not support combustion or respiration, but is inflammable, burning with a blue, or slightly yellow flame, yielding scarcely any light. Mixed with a due proportion of atmospheric air or oxygen, and ignited, it explodes with great violence: the products of its combustion are water and carbonic acid.

When light carburetted hydrogen is exposed to a white heat, it is slowly decomposed, depositing carbon, and yielding twice its volume of hydrogen.

Carbonic oxide.— This gas consists of 6 parts by weight of carbon, and 8 parts

Digitized by Google

of oxygen. It is formed when carbon is consumed in a limited quantity of air or oxygen, and is also generated, as stated above, when steam is passed over ignited coke or charcoal, or when coal tar and steam meet in a red-hot vessel. It is always a constituent of coal-gas.

Carbonic oxide is a colourless and inodorous gas, rather lighter than atmospheric air, and having exactly the specific gravity of olefiant gas, ·9727; it is very sparingly soluble in water, but is very soluble in ammoniacal solution of chloride of copper. Carbonic oxide is inflammable, burning with a beautiful blue flame almost devoid of light; the product of its combustion is carbonic acid. It is said to be very poisonous.

III. Impurities.

Sulphuretted hydrogen.—This gas consists of sixteen parts of sulphur and one part of hydrogen: it may be produced by passing hydrogen along with the vapour of sulphur through a red-hot tube, but it is best prepared pure by decomposing proto-sulphuret of iron with dilute sulphuric acid, and collecting the evolved gas at the pneumatic trough or over mercury. It is always an ingredient in crude coal, peat, or wood-gas.

Sulphuretted hydrogen is a colourless gas, of a very nauseous odour, resembling that of putrid eggs; its specific gravity is 1·1747. It is highly inflammable, burning with a blue flame, destitute of light, and generating a large amount of sulphurous acid: it is chiefly this latter circumstance which renders its presence in coal-gas objectionable. It is readily absorbed by metallic solutions, by hydrated oxide of iron, and by lime both in the wet and dry state, and is easily recognised in coal-gas by exposing a strip of paper impregnated with acetate of lead to a stream of the gas; if the paper becomes discoloured, sulphuretted hydrogen is present.

Hydrosulphate of sulphide of ammonium.—This compound is formed by the combination of equal volumes of ammonia and sulphuretted hydrogen. It consists of 14 parts by weight of nitrogen, 15 of hydrogen, and 32 of sulphur. It is always largely produced in the manufacture of coal-gas, but is almost completely condensed and retained in the aqueous layer of liquid products, contributing principally to the unbearable odour of *gas liquor;* a mere trace of this body is therefore present in crude coal-gas. When quite pure it is a colourless crystalline solid, very soluble in water, and volatile at ordinary temperatures. Its vapour, when present in coal-gas, is absorbed and decomposed by hydrate of lime both in the wet and dry state, ammonia being liberated. It is also decomposed by acids, but in this case the ammonia is retained by the acid, whilst sulphuretted hydrogen is evolved.

Carbonic acid.—This gas is met with in nature as a constituent of atmospheric air, and is produced in large quantities during the earlier stages of the formation of coal in the earth's strata. Thus, in the lignite districts of Germany, it is copiously evolved, and meeting with water in its passage to the surface, it is absorbed, and forms those sparkling mineral springs commonly known as seltzer-water.

Carbonic acid is also formed during fermentation, by the combustion of carbon in air, and in the decomposition of water by carbon at a red heat.

At ordinary temperatures carbonic acid is a colourless and invisible gas, but it may be liquefied by very intense cold or pressure. It consists of 6 parts, by weight, of carbon united with 16 parts of oxygen, and thus differs from carbonic oxide by containing twice as much oxygen as the latter gas. By passing carbonic acid over ignited coke, charcoal, or other carbonaceous matters, it takes up as much carbon as it already contains, and becomes converted into carbonic oxide; but it is impossible in this way to convert the whole of the carbonic acid into carbonic oxide unless the process be very frequently repeated. Carbonic acid is pungent, acidulous, and soluble in an equal bulk of water, to which it communicates that briskness which we so much admire in soda-water; it is considerably heavier than atmospheric air, its specific gravity being 1·524. This gas is uninflammable, and cannot support combustion or animal life. Its acid properties are not strongly developed, but it unites readily with alkaline bases, forming carbonates: it is upon this property that the removal of carbonic acid from coal-gas depends. On passing coal-gas containing this acid through slaked lime in fine powder, or through milk of lime, the whole of the carbonic acid disappears, having united with the lime. Quick-lime, slaked in such a manner as to be neither dust-dry nor very perceptibly moist, is most effective for the absorption of high percentages of carbonic acid, a layer three inches in thickness not allowing a trace of the acid gas to pass through it.

The presence even of a small percentage of carbonic acid in coal-gas is much to be deprecated, on account of the great loss of light which it occasions, 1 per cent. of carbonic acid diminishing the illuminating power of coal gas to the extent of about 6 per cent.; the addition which it makes to the carbonic acid produced during combustion is, however, too minute to be of any importance.

Digitized by Google

Carbonate of ammonia.—During the destructive distillation of coal, a considerable proportion of the nitrogen contained in the coal is converted into carbonate of ammonia, the greater part of which condenses in the aqueous layer of liquid products; but as carbonate of ammonia is very volatile, even at ordinary temperatures, crude coal-gas always contains a small quantity of this compound. It is a volatile, white, crystalline solid, very soluble in water, and possessing a pungent smell like ammonia. Its vapour is decomposed by lime, which unites with carbonic acid, liberating ammonia. The presence of this salt or of ammonia, in coal-gas is very undesirable, as it corrodes brass fittings, and is also partially converted into nitrous acid during the combustion of the gas.

Bisulphide of carbon.—This compound consists of 6 parts, by weight, of carbon, and 32 parts of sulphur; it is formed whenever sulphur and carbonaceous matter are brought together at a bright-red heat, and therefore, owing to the presence of sulphur in all varieties of coal, its vapour is generally, and probably always, present in coal-gas. Bisulphide of carbon is a colourless liquid, of a most insupportable odour, resembling garlic; it is very volatile, boiling at 108°. It does not mix with water, but dissolves in alcohol and ether; it is also very soluble in solution of caustic soda or potash in methylic, ethylic, or amylic alcohol. It is very inflammable, and generates during combustion much sulphurous acid: on this account its presence in coal-gas is very injurious, and as there is no known means of removing it on a large scale by any mode of purification, its non-generation in the process of gas-making becomes a problem of great importance. Few attempts have yet been made to solve this difficulty, but Mr. Wright, the eminent engineer of the Western Gas Company, has observed that its formation is greatly hindered, if not entirely prevented, by the employment of a somewhat moderate temperature. In corroboration of this observation it has frequently been noticed that the gas furnished by companies who use a high heat contains a very large quantity of this noxious material, whilst gas generated at lower temperatures, as for instance, that produced by White's hydrocarbon process, contains mere traces of this compound. Although no process for the absorption of bisulphide of carbon vapour from coal-gas is sufficiently cheap for employment on a large scale, yet advantage might be taken of its solubility in a solution of caustic potash in fusel oil (a by-product in spirit distilleries) or in methylated spirit of wine, for its removal from the gas supplied to private houses, where the damage done by the sulphurous acid is most annoying. By passing the gas over a considerable surface of this solution, contained in a small private purifier, the bisulphide of carbon vapour is completely removed.

Bisulphide of carbon vapour can be readily detected in coal-gas by a very simple apparatus devised by Mr. Wright*: in this instrument the products of the combustion of a jet of gas are made to pass through a small Liebig's condenser; if the liquid dropping from this condenser strongly redden blue litmus-paper, it is highly probable that bisulphide of carbon is present. As a decisive test, 50 or 60 drops of the condensed fluid should be collected in a small test-tube, and a few drops of pure nitric acid added: on heating this mixture to boiling over a spirit-lamp, and then adding a drop or two of a solution of chloride of barium, the liquid will become more or less milky if bisulphide of carbon has been present in the gas. It is necessary here to remark, that the absence of sulphuretted hydrogen must be first ascertained by the non-coloration of paper imbued with acetate of lead, and held for some minutes in a stream of the gas.

Nitrogen.—This gas is the chief constituent of atmospheric air, 100 cubic feet of air containing rather more than 79 cubic feet of this gas. It also enters into the composition of a large number of animal and vegetable substances. All descriptions of coal contain small quantities of this element. When nitrogen is eliminated from combination in contact with oxygen, it usually takes the form of nitrous or nitric acid; whilst in contact with an excess of hydrogen it generates ammonia. It is in this latter form that it is eliminated from coal in the process of gas-generation.

Nitrogen is a colourless, inodorous, and tasteless gas, of specific gravity 0·976. It is incombustible under ordinary circumstances, and instantaneously extinguishes burning bodies. Under certain conditions, however, nitrogen does undergo combustion, as when it is exposed to a very intense heat in the presence of oxygen. This occurs, for instance, when a small quantity of nitrogen is added to a mixture of hydrogen, with a somewhat larger proportion of oxygen than is requisite to form water, and the mixture then ignited: a loud explosion takes place, and a considerable quantity of nitric acid is formed, owing to combustion of the nitrogen, or in other words, its union with oxygen gas. This formation of nitric acid possibly occurs also to a limited extent during the burning of coal gas; and as the temperature required to form nitric acid is very high, the greater the volume of gas consumed from one burner

* This instrument can be had on application to Mr. Wright, 55 and 55A, Millbank Street, Westminster, S. W.

Digitized by Google

in a given time, the greater will be the relative quantity of nitric acid produced. The formation of such a corrosive material as nitric acid under these circumstances shows the importance of preventing the admixture of the products of the combustion of coal-gas with the atmosphere of the apartments in which it is consumed. The nitrogen contained in coal-gas is due entirely to the admission of atmospheric air, and not to the elimination of the nitrogen contained in the coal; for this latter nitrogen appears to be evolved only in combination with hydrogen as ammonia. As nitrogen is incombustible, it is not only a useless ingredient in coal-gas, but, owing to its abstracting heat from the flame of such gas, it causes a diminution of light, and is thus decidedly injurious. The admixture of this element ought therefore to be avoided as much as possible.

Oxygen.—This element is always present in coal-gas, although in very small quantity if the manufacture be properly conducted. It is never evolved from the coal itself, but it makes its way into the gas through leaky joints, and also to a certain extent through the water in which the holders are immersed. Its presence is highly injurious to the illuminating power of the gas; and since, when once introduced, it cannot be abstracted by any practicable means, its admixture ought to be carefully guarded against.

Oxygen is a colourless, invisible and inodorous gas, very sparingly soluble in water, and which has hitherto resisted all attempts to liquefy it by cold or pressure. It is evolved from the leaves of plants under the influence of light, and constitutes about one fifth of the bulk of our atmosphere. By far the largest amount of oxygen however exists in combination with other elements; thus eight out of every nine tons of water are pure oxygen, and it forms at least one third of the total weight of the mineral crust of our globe. It is therefore the most abundant of all elements. Oxygen gas is heavier than atmospheric air; 100 cubic inches, at 60° Fahr. and 30 inches barometric pressure, weighing 34·193 grains, whilst 100 cubic inches of the latter weigh only 31·0117 grains. The specific gravity of oxygen is 1·1026. It eminently supports combustion, all combustible bodies when introduced into it burning much more vividly than in common air; indeed it is owing to the presence of this gas in our atmosphere, that common air possesses the property of supporting combustion.

Aqueous vapour.—Water is volatile at all natural temperatures, and therefore its vapour always exists to a greater or less extent diffused in coal gas, even as delivered to the consumer. The percentage amount of aqueous vapour thus present in coal-gas is always small, even when the gas is saturated; nevertheless the presence of even this small, proportion of aqueous vapour diminishes to a certain extent the light produced by the combustion of gas. This effect is no doubt owing to the action of aqueous vapour upon carbon at a high temperature, by which action hydrogen, carbonic oxide, and carbonic acid gases are produced. The presence of aqueous vapour therefore tends to reduce the number of particles of carbon floating in the gas flame and consequently the light is diminished. The following table shows the maximum percentages of aqueous vapour which can be present in gas at different temperatures. As a general rule the gas will contain the maximum amount at the lowest temperature to which it has been exposed in its passage from the retorts to the burners.

Temperature.	Percentage of aqueous vapour.	Temperature.	Percentage of aqueous vapour.	Temperature.	Percentage of aqueous vapour.
32° F.	0·6	42° F.	0·9	52° F.	1·3
33°	0·6	43°	0·9	53°	1·3
34°	0·7	44°	1·0	54°	1·4
35°	0·7	45°	1·0	55°	1·4
36°	0·7	46°	1·0	56°	1·5
37°	0·7	47°	1·1	57°	1·5
38°	0·8	48°	1·1	58°	1·6
39°	0·8	49°	1·1	59°	1·7
40°	0·8	50°	1·2	60°	1·8
41°	0·9	51°	1·2		

Aqueous vapour has a specific gravity of ·6201, and one cubic foot of it contains one cubic foot of hydrogen and half a cubic foot of oxygen. In contact with ignited carbon, or carbonaceous substances, it is decomposed; producing a mixture of hydrogen, carbonic oxide, and carbonic acid gases. When passed over ignited iron it yields its own volume of nearly pure hydrogen.

Digitized by Google

Having thus described the more important properties of the constituents of coal-gas, we are now prepared to discuss the conditions involved in the generation, purification, and combustion of gas.

On the generation of illuminating gas. — The production of gas for illuminating purposes whether derived from coal, peat, wood, or oil, depends, as we have seen, upon a re-arrangement of the elements composing the material employed. The nature of this re-arrangement is dependent upon the temperature employed. The lower the heat at which it can be effected, the less the weight of coke or carbonaceous residue left in the retort, and, consequently, the greater the amount of carbon remaining combined with the hydrogen; the hydro-carbons thus formed being chiefly solids and liquids. On the other hand, the higher the temperature employed, the greater is the weight of carbonaceous residue, and, therefore, the smaller is the amount of carbon contained in the volatilised matters, whilst the proportion of gases in these latter becomes larger as the temperature increases. By employing a very low temperature for the destructive distillation, the production of gas may be almost entirely prevented, whilst by the employment of a very high temperature the three chief constituents of coal might without doubt be completely converted into coke, carbonic oxide, and hydrogen. Now the results produced by both these extremes of temperature are valueless to the gas manufacturer, and it is therefore necessary to employ a heat sufficiently high to prevent as much as possible the volatile substances from escaping in the form of condensible vapours, but not high enough to decompose the luminiferous constituents of the evolved gas. If coal were a definite and single chemical compound, and could be so exposed to heat as to suddenly raise the temperature of every particle to a uniform and definite degree, it is highly probable that the results of the distillation would be far less complex than they are in the present mode of gas manufacture; and it might even be possible to find such a degree of temperature as would convert the whole of the hydrogen into one or more of the higher gaseous compounds of carbon, thus giving results of maximum value to the gas manufacturer. In the ordinary processes of gas-making, where a charge of several cwts. of coal, often in large lumps, is thrown into an ignited retort, it is impossible to attain any such uniform temperature. The heat is conducted very gradually to the interior of the mass of coal, and therefore various portions of the charge are exposed to very unequal temperatures, especially in the earlier stages of the distillation. The natural consequence of these conditions is the production, on the one hand, of products resulting from excessive temperature, viz. hydrogen and light carburetted hydrogen, and on the other, of tar, which may be regarded as the consequence of deficient heat. Notwithstanding several attempts, these disadvantages have not yet been successfully overcome, but the importance of a practical process which would secure a tolerably uniform temperature during the whole course of distillation, is seen from the remarkable results obtained with Clegg's revolving web retort; a form of apparatus undoubtedly the most ingenious yet invented for the production of gas, and which, although in its present form too complicated for successful practical use, yet embodies, when we consider the early date of its invention, in a remarkable manner, the true scientific principles of gas-making. This retort, of which a description will be found at p. 750, obviated to a great extent the inequality and uncertainty of temperature in the ordinary gas retorts, and the result was an increase of from 30 to 40 per cent. in the quantity of gas produced, the quality being also improved, whilst scarcely any tar was formed.

But besides the great influence exercised by the temperature to which coal is exposed in the process of gas-making, *the length of time*, during which the volatile products of decomposition are exposed to that temperature, is a most important circumstance as regards the successful manufacture of gas. If we take into consideration the behaviour of the luminiferous constituents of gas when exposed to a bright red heat, and which has been described above; it will be evident that a second most important condition in the manufacture of gas is the rapid removal of these luminiferous constituents from the destructive influence of the red-hot retort as soon as they are generated: every second during which these gases are allowed to remain in their birthplace diminishes their value as illuminating agents. The only method hitherto employed for the rapid removal of the gases from the retorts is White's process, the mechanical details of which are fully described below. This process consists essentially in transmitting a current of *water gas* through the retorts in which coal or cannel gas is being generated. The water gas is produced by transmitting steam through retorts filled with coke or charcoal, and consists of a mixture of hydrogen, carbonic oxide, and carbonic acid gases. These gases, which are not in themselves luminiferous on combustion, necessarily become mixed with the coal or cannel gas, and thus diminish the illuminating power of the latter whilst they increase its volume. Nevertheless, if the admission of water gas be properly managed, the luminiferous constituents saved from destruction by their rapid removal from the retorts, compensate for the

Digitized by Google

dilution of the gas, so as to render the diluted gas equal in illuminating power to the gas produced from the same coal or cannel in the ordinary process of manufacture. When cannels yielding very highly luminiferous gas are employed, it is desirable to dilute them to a much greater extent, and this can be easily effected by admitting into the coal retort a larger proportion of water gas. In some cases the total amount of light yielded by the gas from a given weight of coal when treated according to White's process is more than double that obtained by the ordinary process, and in all cases the gain in total amount of light is very large, thus showing the importance of removing the gases from the red-hot retorts as rapidly as possible. This remark applies especially to gases very rich in luminiferous hydrocarbons, because such gases suffer relatively much more deterioration than those containing a larger proportion of diluents. In addition to these advantages such a dilution of rich cannel gases with any of the non-luminous constituents, hydrogen, carbonic oxide, or light carburetted hydrogen, increases the illuminating power of the gas in another way: this is effected by their forming a medium for the solution of the vapours of such hydrocarbons as exist in the liquid or even solid state at the ordinary temperature of the atmosphere, and they thus enable us to convert an additional quantity of illuminating materials into the gaseous form, which they retain permanently, unless the temperature fall below the point of saturation. The gain in illuminating power which is thus obtained will be perhaps better seen from the following example: — Suppose 100 cubic inches of olefiant gas were allowed to saturate itself with the vapour of a volatile hydrocarbon, containing three times as much carbon in a given volume of its vapour as that contained in an equal volume of olefiant gas, and that it took up or dissolved 3 cubic inches of this vapour; then, if we express the value of 1 cubic inch of olefiant gas by unity, the illuminating power of the 103 cubic inches of the mixture of olefiant gas and hydrocarbon vapour will be 109. Now if we mix these 103 cubic inches with 100 cubic inches of hydrogen, the mixture will be able to take up an additional 3 cubic inches of hydrocarbon vapour, and the illuminating power of the 206 cubic inches will then become 118; thus the hydrogen produces a gain in illuminating power equal to 9 cubic inches of olefiant gas, or nearly 4·5 per cent. upon the volume of mixed gases. When we consider that coal naphtha contains hydrocarbons of great volatility, and that these are the surplus remaining after the saturation of the gas from which they have condensed, the importance of this function of the non-illuminating class of combustible gases will be sufficiently evident. It may here be remarked that incombustible gases could not be employed for this purpose, since their cooling influence upon the flame during the subsequent burning of the gas would diminish the light to a greater extent than the hydrocarbon vapour could increase it.

It is evident that all the three non-illuminating gases, forming the class of diluents, would perform both the offices here assigned to them perfectly well, and therefore we have as yet seen no reason for giving our preference in favour of any one of these diluents; if, however, we study their behaviour during combustion, we shall find that where the gas is to be used for illuminating purposes, hydrogen has qualities which give it a very decided preference over the other two. When gas is used for lighting the interior of public buildings and private houses, it is very desirable that it should deteriorate the air as little as possible, or, in other words, it should consume as small a quantity of oxygen and generate as little carbonic acid as possible. The oppressive heat which is so frequently felt in apartments lighted with gas also shows the advantage of the gas generating a minimum amount of heat.

The following is a comparison of the properties of the three non-illuminating gases in reference to the points just mentioned:—

One cubic foot of light carburetted hydrogen, at 60° Fahr. and 30 inches barometrical pressure, consumes 2 cubic feet of oxygen during its combustion, and generates 1 cubic foot of carbonic acid, yielding a quantity of heat capable of heating 5 lbs. 14 oz. of water from 32° to 212°, or causing a rise of temperature from 60° to 80·8° in a room containing 2500 cubic feet of air.

One cubic foot of carbonic oxide, at the same temperature and pressure, consumes, during combustion, ½ a cubic foot of oxygen, generates 1 cubic foot of carbonic acid, and affords heat capable of raising the temperature of 1 lb. 14 oz. of water from 32° to 212°, or that of 2500 cubic feet of air from 60° to 66·6°.

One cubic foot of hydrogen, at the same temperature and pressure, consumes ½ a cubic foot of oxygen, generates no carbonic acid, and yields heat capable of raising the temperature of 1 lb. 13 oz. of water from 32° to 212°, or that of 2500 cubic feet of air from 60° to 66·4°.

This comparison shows that light carburetted hydrogen is very objectionable as a diluent, not only on account of the carbonic acid which it generates, but also by reason of the very large quantity of oxygen which it consumes, and the very great amount of heat which, in relation to its volume, it evolves on combustion; the consumption of

Digitized by Google

oxygen being four times, and the absolute thermal effect more than three times as great as that of either of the other gases.

The quantity of heat evolved by the combustion of equal volumes of carbonic oxide and hydrogen is nearly, and the amount of oxygen consumed quite, the same; but the carbonic acid evolved from the first gives a decided preference to hydrogen as the best diluent.

The same comparison also shows that when the gas is to be used for heating purposes, and the products of combustion are carried away, light carburetted hydrogen is by far the best diluent.

The experiments of Dulong on the absolute thermal effects of hydrogen, light carburetted hydrogen, and carbonic oxide are taken as the basis of the foregoing calculations. Dulong found that —

1 lb. of hydrogen raised the temperature of	1 lb.	of	water through	62471° F.
1 lb. of carbonic oxide	„	„	„	4504° F.
1 lb. of light carburetted hydrogen	„	„	„	24244° F.

These considerations indicate the objects that should chiefly be regarded, in the generating department of the manufacture of gas for illuminating purposes. They are—

1st. The extraction of the largest possible amount of illuminating compounds from a given weight of material.

2nd. The formation of a due proportion of illuminating and non-illuminating constituents, so that on the one hand the combustion of the gas shall be perfect, and without the production of smoke or unpleasant odour, and on the other, the volume of gas required to obtain a certain amount of light shall not be too large.

3rd. The presence of the largest possible proportion of hydrogen amongst the non-illuminating constituents, to the exclusion of light carburetted hydrogen, and carbonic oxide; so as to produce the least amount of heat and atmospheric deterioration in the apartments in which the gas is consumed.

On the purification of illuminating gas. — If we except the insignificant quantities of nitrogen and oxygen, which become mixed with illuminating gas through imperfections in the joints of the apparatus employed, and by the transferring power of the water of the gasholder, all impurities arise from the presence of the three elements sulphur, oxygen, and nitrogen in the generating material used.

The sulphur, uniting with portions of the hydrogen and carbon of the coal, generates with the first named element sulphuretted hydrogen, and with the second, bisulphide of carbon. It is also probable that volatile organic compounds of sulphur are produced by the union of this element with carbon and hydrogen simultaneously, although we have as yet no positive evidence of their presence in illuminating gas. The oxygen, uniting with another portion of carbon, forms carbonic acid, whilst the nitrogen unites with hydrogen to form ammonia, which, by combination with sulphuretted hydrogen, produces hydrosulphate of sulphide of ammonium, and, with carbonic acid and water, carbonate of ammonia. With the exception of bisulphide of carbon and the organic sulphur compounds just mentioned, the removal of all these impurities is not difficult. Slaked lime, either in the form of moist powder, or suspended in water as milk of lime, absorbs the whole of them; whilst it has no perceptible effect upon the other constituents of the gas. By this process of purification the sulphuretted hydrogen and caustic lime are converted into sulphide of calcium and water; the former being non-volatile does not mix with the gas. Hydrosulphate of sulphide of ammonium is in like manner converted into sulphide of calcium, water, and ammonia: part of the latter is retained by the moisture present in the purifying material, but the remainder mixes with the gas, from which, however, it can be removed by contact with a large surface of water. Carbonic acid unites with caustic lime with great energy, forming carbonate of lime, a perfectly non-volatile material; and thus the acid gas is effectually retained. Carbonate of ammonia is under similar circumstances decomposed, carbonate of lime being formed and ammonia liberated; the last, as before, being only partially retained by the moisture present, and requiring when "dry lime" is used, a subsequent application of water for its complete removal. Although in the wet lime purifying process a given weight of lime can remove a much larger volume of impurities, yet the dry lime process possesses so many manipulatory advantages that it is now all but universally employed where lime is used as the purifying agent. The maximum amount of sulphuretted hydrogen or of carbonic acid which can be absorbed by 1 lb. of quick-lime, in the so-called dry and wet states respectively, is seen from the following table: —

	Cubic feet of Sulphuretted hydrogen.	Cubic feet of Carbonic acid.
1 lb. of quick-lime used as dry lime absorbs	6·78	3·39
1 lb. of quick-lime used as wet lime absorbs	6·78	6·78

Digitized by Google

In practice, however, the absorption actually effected is, even under the most favourable circumstances, considerably less than here indicated. As a substitute for lime in the purification of gas a mixture of hydrated peroxide of iron and sulphate of lime has lately come into extensive use. This material is prepared in the first place by mixing slaked lime with hydrated peroxide of iron, the composition being rendered more porous by the addition of a certain proportion of sawdust. This mixture is now in a condition to remove those impurities from coal-gas which are abstracted by lime. The peroxide of iron absorbs sulphuretted hydrogen and sulphide of ammonium and becomes converted into sulphide of iron. The slaked lime absorbs carbonic acid and carbonate of ammonia until it is converted into subcarbonate of lime. When the absorbing powers of the mixture are nearly exhausted, the covers of the purifiers are removed and the mixture is exposed to the air. The following change is then said to take place. The sulphide of iron rapidly absorbs oxygen and becomes converted first into sulphate of protoxide of iron and finally into sulphate of peroxide, which latter is decomposed by the carbonate of lime, carbonic acid being evolved as gas, whilst sulphate of lime and peroxide of iron are produced; the mixture is thus again rendered available for the process of purification; the peroxide of iron acts as before, but in the place of quick-lime we have now sulphate of lime, which is quite effectual for the removal of carbonate of ammonia, with which it forms carbonate of lime and sulphate of ammonia; but the mixture is incapable of removing free carbonic acid, and it is therefore necessary to provide a separate dry lime purifier for the removal of this gas. When the purifying material is again saturated with the noxious gases, another exposure to atmospheric oxygen restores it again to its active condition, the only permanent effect upon it being the accumulation of sulphate of ammonia within its pores. If this latter salt be occasionally dissolved out with water, the mixture may be used over and over again to an almost unlimited extent. It has been found that this process can be much simplified, and Mr. Hills, who has brought gas purification to great perfection, recommends that hydrated peroxide of iron should be merely mixed with a considerable bulk of sawdust and placed in the purifiers. After the gas has passed through this mixture for 18 hours, it is shut off and replaced by a current of air forced through by a fanner for 3 hours. The sulphide of iron is thus oxidised, sulphur being separated and hydrated peroxide of iron regenerated; and the purifying material being now revivified, the gas may be passed through it again as before. In this way it is only found necessary to remove the material once a month in order to separate the lowest stratum of about an inch in thickness, which has become clogged up with tar. A proportional quantity of fresh mixture of hydrated peroxide of iron and sawdust having been added, the whole is again returned to the purifier. It is difficult to conceive a more simple and inexpensive process of purification than this. It does not, however, remove carbonic acid. Several other materials have been proposed for the separation of sulphuretted hydrogen from coal-gas, such as sulphate of lead, and chloride of manganese, but they possess no peculiar advantages and have never been extensively adopted.

It has been already mentioned that, in addition to sulphuretted hydrogen and carbonic acid, which are readily removed by the processes just described, there also exist in coal gas, as impurities, variable quantities of bisulphide of carbon and probably sulphuretted hydrocarbons. Now all these sulphur compounds produce sulphurous acid during the combustion of the gas, and where the quantities of these impurities is considerable, as is the case with much of the gas now manufactured, the atmosphere of the apartments in which such gas is used becomes so strongly impregnated with sulphurous acid, as to be highly offensive to the senses and very destructive to art decorations, bindings of books, &c. It becomes, therefore, a matter of considerable importance to prevent, as far as possible, the occurrence of these injurious constituents; in fact, until this is effected, gas will never be more than very partially adopted as a means of illumination in dwelling houses. When once generated with coal-gas all attempts to remove these constituents have hitherto proved ineffectual, and there seems little ground for hope that any practicable process will be devised for their abstraction. Attention may, therefore, more profitably be directed to the conditions which tend to diminish the amount generated in the retorts, or altogether to prevent their formation. Mr. Wright, who has paid considerable attention to this problem, finds that the employment of a moderate heat for the generation of the gas has the effect of greatly reducing the relative quantity of these noxious ingredients, and thus by simply avoiding excessive heat in the retorts, and rejecting the last portions of gas, he has, to a great extent, prevented their formation. Unfortunately, however, this remedy is not likely to find favour amongst gas manufacturers in general, inasmuch as it considerably reduces the yield of gas. A few well-directed chemical experiments could scarcely fail to discover the conditions necessary for the non-production of these sulphuretted compounds. Probably the proper admixture of

Digitized by Google

salt or lime with the coals before carbonisation would have the desired effect. The subject is one of so much importance to the future of gas illumination, that it ought not to be suffered to rest in its present unsatisfactory condition.

On the consumption of gas.—The proper consumption or burning of illuminating gas depends upon certain physical and chemical conditions, the due observance of which is of great importance in the development of a maximum amount of light. The production of artificial light depends upon the fact that, at certain high temperatures, all matter becomes luminous. The higher the temperature the greater is the intensity of the light emitted. The heat required to render matter luminous in its three states of aggregation differs greatly. Thus solids are sometimes luminous at comparatively low temperatures, as phosphorous and phosphoric acids. Usually, however, solids require a temperature of 600° or 700° F. to render them luminous in the dark, and must be heated to 1000° F. before their luminosity becomes visible in daylight. Liquids require about the same temperature. But to render gases luminous, they must be exposed to an immensely higher temperature; even the intense heat generated by the oxyhydrogen blowpipe scarcely suffices to render the aqueous vapour produced visibly luminous, although solids, such as lime, emit light of the most dazzling splendour when they are heated in this flame. Hence those gases and vapours only can illuminate which produce, or deposit, solid or liquid matter during their combustion. This dependence of light upon the production of solid matter is strikingly seen in the case of phosphorus, which when burnt in chlorine produces a light scarcely visible, but when consumed in air or oxygen emits light of intense brilliancy. In the former case the *vapour* of chloride of phosphorus is produced, in the latter, *solid* phosphoric acid.

Several gases and vapours possess this property of depositing solid matter during combustion, but a few of the combinations of carbon and hydrogen are the only ones capable of practical application: these latter compounds evolve during combustion only the same products as those generated in the respiratory process of animals, viz. carbonic acid and water. The solid particles of carbon which they deposit in the interior of the flame, and which are the source of light, are entirely consumed on arriving at its outer boundary; their use as sources of artificial light, under proper regulations, is therefore quite compatible with the most stringent sanitary rules.

The constituents of purified coal-gas have already been divided into illuminating and non-illuminating gases; amongst the latter will be found light carburetted hydrogen, which, although usually regarded as an illuminating gas, has been proved by the experiments of Frankland to produce, under ordinary circumstances, no more light than hydrogen or carbonic oxide, and therefore for all practical purposes it must be regarded as entirely destitute of illuminating power. This is owing chiefly to the temperature required for the deposition of its carbon being higher than that attained in an ordinary gas burner; for Frankland has proved that, if the temperature of the light carburetted hydrogen flame be increased by previously heating the gas and air nearly to redness, then the flame becomes luminous to a considerable degree. It is not improbable that when gas is consumed in very large burners this necessary temperature is attained, and the light carburetted hydrogen contributes considerably to the aggregate illuminating effect; a view which is, to a certain extent, confirmed by the fact, that a relatively much larger amount of light is obtained from coal gas when the latter is consumed in a large flame than when it is allowed to burn in a small flame.

Omitting light carburetted hydrogen and carbonic oxide, the remaining carboniferous constituents of coal-gas yield, during combustion from suitable burners, an amount of light directly proportionate to the quantity of carbon which they contain in a given volume.

In order to understand the nature of the combustion of a gas flame, it is necessary to remember that the flame is freely permeable to the air, and that according to the well known laws of gaseous mixture, the amount of air which mixes with the ignited gases will be increased, first, by an increase of the velocity with which the gas issues from the orifice of the burner; and secondly, by the velocity of the current of air immediately surrounding the flame. It is well known that a highly luminiferous gas may be deprived of all illuminating power either by being made to issue from the burner with great velocity, or by being burnt in a very rapid current of air produced by a very tall glass chimney.

The foregoing considerations indicate the conditions best adapted for obtaining the maximum illuminating effect from coal gas. The chief condition is the supply of just such a volume of air to the gas flame as shall prevent any particles of carbon from escaping unconsumed. Any excess of air over this quantity must diminish the number of particles of carbon deposited within the flame, and consequently impair the illuminating effect.

Digitized by Google

Another condition is the attainment of the highest possible temperature within the flame. The first of these conditions has been more or less perfectly obtained in the different gas burners now in use. The second has been hitherto almost entirely neglected: the means by which it may be attained will be discussed after the burners at present in general use have been described.

The chief burners now in use are the bat's-wing, fish-tail, argand, bude argand, Winfield's argand, Guise's argand, and Leslie's argand.

The *bat's-wing* consists of a fine slit cut in an iron nipple, giving a flat fan-like flame.

The *fish-tail* consists of a similar nipple perforated by two holes, drilled so that the jets of gas are inclined towards each other at an angle of about 60°. A flat film of flame is thus produced, somewhat resembling the tail of a fish. This form of burner is especially adapted for the consumption of cannel and other highly illuminating gases.

The *argand* consists of a hollow annulus (see *fig.* 482), from the upper surface of which the gas issues through a number of small apertures, which are made to vary in diameter from $\frac{1}{33}$nd of an inch to $\frac{1}{50}$th of an inch, according to the richness of the gas; the most highly illuminating gases requiring the smallest apertures. The distances of the orifices for coal-gas should be ·16 to ·18 inch, and for rich cannel gas ·13 inch. If the argand ring has 10 orifices, the diameter of the central opening should be $=\frac{4}{10}$ths of an inch; if 25 orifices, it should be 1 inch for coal gas; but for oil gas, with 10 orifices, the central opening should have a diameter of $\frac{1}{2}$ an inch, and for 20 orifices, 1 inch. The pin holes should be of equal size, otherwise the larger ones will cause smoke, as in an argand flame with an uneven wick.

482

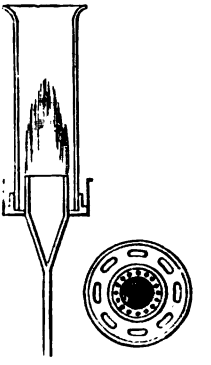

The *bude burner* consists of 2 or 3 concentric argand rings perforated in the manner just described. It is well adapted for producing a large body of very intense light with a comparatively moderate consumption of gas.

Winfield's argand. — The chief distinction between this and the ordinary argand burner consists in the introduction of a metallic button above the annulus, so as to cause the internal current of air to impinge against the flame. A peculiarity in the shape of the glass chimney, as seen in the figure, produces the same effect upon the outer current of air. See *fig.* 483.

Guise's argand contains 26 holes in a ring, the inner diameter of which is ·6 inch, and the outer diameter 1·9 inch. Like the Winfield burner, it has a metal button $\frac{1}{2}$ an inch in diameter, and 1 inch above the annulus. The glass chimney, which is cylindrical, is 2 inches in diameter, and 6 inches long.

Leslie's argand consists, as seen in the figure (*fig.* 485), of a series of fine tubes

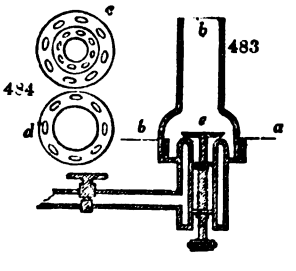

485

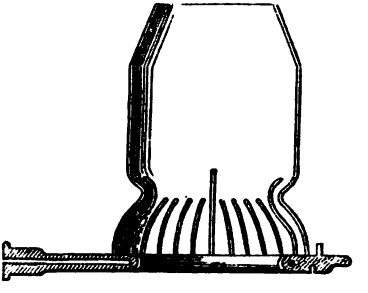

arranged in a circle, by which a more uniform admixture of air with the gas is effected. A sufficient current of air for all these argand burners can only be obtained by the use of a glass chimney, the rapidity of the current depending upon the height of the chimney. In the Leslie's argand the height of the chimney is especially adapted to the amount of light required, and in order to consume gas economically, this point must be attended to in all argand burners.

The following experiments made with different burners, by three eminent experimenters, upon the gas from three different kinds of coal, show the relative values of these burners for the gases produced from the chief varieties of coal used for the manufacture of gas in this country.

Digitized by Google

TABLE I.—*Experiments on Wigan Cannel Gas, at different Rates of Consumption, by Mr. Alfred King.*

	½ Foot.	1 Foot.	1½ Foot.	2 Feet.	2½ Feet.	3 Feet.	3½ Feet.	4 Feet.	4½ Feet.	5 Feet.	5½ Feet.
Single Jet:—											
One foot = candles - - - -	2·15	2·6									
„ = grains of sperm - -	258·3	311·8									
Lancashire Fish-tail, No. 0:—											
One foot = candles - - - -	1·78	2·18	1·76								
„ = grains of sperm - -	214·1	262·5	211·9								
Lancashire Fish-tail, No. 1:—											
One foot = candles - - - -	1·76	2·65	2·55	2·53							
„ = grains of sperm - -	211·3	317·9	306·5	303·7							
Lancashire Fish-tail, No. 2:—											
One foot = candles - - - -	2·26	3·11	3·5	3·76	3·79	3·66					
„ = grains of sperm - -	271·2	373·3	420·6	455·7	455·7	439·4					
Lancashire Fish-tail, No. 3:—											
One foot = candles - - - -	2·26	3·48	3·86	4·07	4·07	4·18	4·1	4·3			
„ = grains of sperm - -	285·5	419·5	484·4	500·5	566·7	539·9	530·1	516·6			
Bat's-wing:—											
One foot = candles - - - -	1·83	3·01	3·73	4·1	4·12	4·31	4·3	4·46	4·32	4·4	
„ = grains of sperm - -	220·0	361·6	448·3	492·3	494·8	578·1	516·2	535·1	519·0	528·9	
Sixteen-hole Argand, small holes in ring 0·82 inch in diameter:—											
One foot = candles - - - -	- -	0·323	1·02	1·9	2·6	3·27	3·72	3·84	3·96		
„ = grains of sperm - -	- -	38·76	123·3	228·7	313·0	393·3	446·4	461·7	479·2		
Winfield's 28-hole Argand, registered July 25th, 1848, with slightly conical chimney:—											
One foot = candles - - - -	- -	0·344	1·16	2·26	2·71	3·5	3·72	3·84	4·0		
„ = grains of sperm - -	- -	41·27	139·1	271·3	325·6	420·5	446·4.	461·7	481·0		
Winfield's 58-hole Lucent Argand, registered March 20th, 1845:—											
One foot = candles - - - -	- -	- -	0·318	0·75	1·09	1·57	2·09	2·59	3·07	3·82	4·5
„ = grains of sperm - -	- -	- -	38·2	87·5	131·8	188·4	251·1	311·3	368·9	458·8	540·0

Digitized by Google

TABLE II.—*Results of Experiments on Newcastle Cannel Gas by Mr. A. Wright.*

	1 Foot per Hour.	1½ Foot per Hour.	2 Feet per Hour.	2½ Feet per Hour.	3 Feet per Hour.	3½ Feet per Hour.	4 Feet per Hour.	4½ Feet per Hour.
Scotch Fish-tail, No. 1:—								
One foot = candles - -	4·75	5·02						
" = grains of sperm	585·0	602·0						
Scotch Fish-tail, No. 2:—								
One foot = candles - -	5·05	5·77	5·95	5·84	5·53			
" = grains of sperm	606·0	690·0	714·0	700·0	563·0			
Guise's Argand:—								
One foot = candles - -	- -	1·08	1·85	3·12	4·85	4·95	5·77	6·74
" = grains of sperm	- -	129·0	222·0	374·0	582·0	594·0	692·0	808·0

* Table III. contains the results of Mr. Barlow's experiments on gas produced from a mixture of Pelton, Felling, and Dean's Primrose, all first class Newcastle gas-coals, largely used in London.

The burners employed in these experiments were the following:—

1st. A No. 3 fish-tail, or union jet.

2nd. A No. 5 bat's-wing.

3rd. A common argand, with 15 large holes in a ring ·85 inch diameter, and a cylindrical chimney glass 7 inches high.

4th. A Platow's registered argand, with large holes in a ring, ·9 inch, with inside and outside cone, and cylindrical chimney glass 8·5 inches high.

5th. A Biznner's patent No. 3 argand, with 28 medium sized holes in a ring ·75 inch diameter, and cylindrical chimney glass 8·65 inches high.

6th. A Winfield's registered argand, with 58 medium sized holes in 2 rings of 29 holes in each, the mean diameter being 1 inch, with deflecting button inside and gauge below, bellied chimney glass 8 inches high.

7th. A Leslie's patent argand, with 28 jets in a ring ·95 inch diameter, and chimney glass 3·5 inches high.

8th. A Guise's registered shadowless argand, with 26 large holes in a ring ·85 inch diameter, and deflecting button, cylindrical chimney glass 6·1 inches high, and glass reflecting cone to outside gallery.

On an average of numerous trials the annexed results were obtained:—

TABLE III

Burner.	Rate of Consumption per Hour in Cubic Feet.	Value of Cubic Foot in Grains of Sperm.	Standard Candles per Cubic Foot.
No. 2	4·9	289·0	2·4
" 3	5·5	343·0	2·85
" 5	5·5	374·0	3·11
" 6	5·5	337·0	2·8
" 8	5·5	350·0	2·91
" 1	5·5	276·0	2·3
" 2	5·0	290·0	2·41
" 3	5·5	341·0	2·84
" 4	5·5	348·0	2·9
" 5	5·5	380 0	3·16
" 6	5·5	335·0	2·79
" 7	4·1	369·0	3·07
" 8	5·5	364·0	3·03

It has been stated that one of the conditions necessary for the production of the maximum illuminating power from a gas flame, is the attainment of the highest possible temperature, and that this condition has been almost entirely neglected in the burners hitherto in use. Dr. Frankland has, however, proved, by some hitherto unpublished experiments, that this condition may be easily secured by employing the waste heat radiating from the gas flame, for heating the air previous to its employment for the combustion of the gas; and that the increased temperature thus obtained has the effect of greatly increasing the illuminating power of a given volume of the gas. *Fig.* 486 shows the burner contrived by Dr. Frankland for this purpose. *a* is a common argand burner, or better, a Les-

Digitized by Google

486

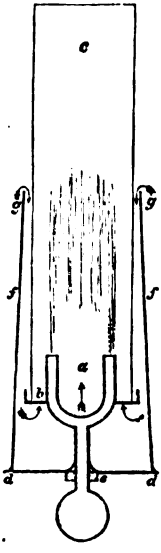

lie's argand, furnished with the usual gallery and glass chimney *b*, *c*; the latter must be 4 to 6 inches longer than usual. *d d* is a circular disc of plate glass, perforated in the centre, and fixed upon the stem of the burner about 1¼ inches below the gallery by the collar and screw *e*. *f f* is a second glass chimney somewhat conical, ground at its lower edge so as to rest air-tight, or nearly so, upon the plate *d d*; and of such a diameter as to leave an annular space ¼ inch broad between the two cylinders at *g g*. The cylinder *f* should be of such a length as to reach the level of the apex of the flame. The action of this burner will now be sufficiently evident. When lighted, atmospheric air can only reach the flame by passing downwards through the space between the cylinders *f* and *c*; it thus comes into contact with the intensely heated walls of *c* and has its temperature raised to about 500° or 600° before it reaches the gas flame. The passage of this heated air over the upper portion of the argand burner also raises the temperature of the gas considerably before it issues from the burner. Thus the gases taking part in the combustion are highly heated before inflammation, and the temperature of the flame is consequently elevated in a corresponding degree. Experiments with this burner prove a great increase in light, due chiefly to the higher temperature of the radiating particles of carbon; but, no doubt, partly also to the heat being sufficiently high to cause a deposition of carbon from the light carburetted hydrogen; thus rendering this latter gas a contributor to the total illuminating effect; whilst, when burnt in the ordinary manner, it merely performs the functions of a diluent. The following are the results of Dr. Frankland's experiments with this burner.

	Rate of Consumption per Hour.	Light in Sperm Candles, each burning 120 grs. per Hour.
I. Argand burner without external cylinder.	3·3 cubic feet	13·0 candles.
	3·7 „	15·5 „
	4·2 „	17·0 „
II. Same burner with external cylinder.	2·2 „	13·0 „
	2·6 „	15·5 „
	2·7 „	16·7 „
	3·0 „	19·7 „
	3·3 „	21·7 „

These results show that the new burner, when compared with the ordinary argand, saves on an average 49 per cent. of gas, when yielding an equal amount of light; and also that it produces a gain of 67 per cent. in light for equal consumptions.

Faraday's ventilating burner. — This admirable contrivance, the invention of Mr. Faraday, completely removes all the products of combustion, and prevents their admixture with the atmosphere of the apartments in which the gas is consumed. The burner consists of an ordinary argand, *fig.* 487, *a*, fitted with the usual gallery and chimney *b*, *b*. A second wider and taller cylinder, *c c*, rests upon the outer edge of the gallery which closes at bottom the annular space, *d d*, between the two glass cylinders. *c c*, is closed at top with a double mica cap *e*. *f* is the tube conveying the gas to the argand; *g g* is a wider tube 1¼ inches in diameter, communicating at one extremity with the annular space between the two glass cylinders, and at the other, either with a flue or the open air. The products of combustion from the gas flame are thus compelled to take the direction indicated by the arrows, and are therefore prevented from contaminating the air of the apartment in which the gas is consumed. *h* is a ground glass globe enclosing the whole arrangement, and having only an opening below for the admission of air to the flame. In order to dispense with the descending tube, to which there

487

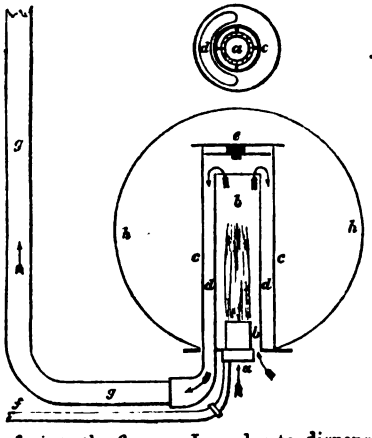

Digitized by Google

are some objections, Mr. Rutter has constructed a ventilating burner in which the ordinary glass chimney is made to terminate in a metal tube, through which the products of combustion are conveyed away. Mr. Dixon has also constructed a modification of Faraday's burner, the peculiarity of which consists in the use of a separate tube bringing air to the flame from the same place, outside the building, to which the products of the burner are conveyed; this contrivance is said to prevent downward draughts through the escape pipe, and a consequently unsteady flame. Faraday's burner is in use at Buckingham Palace, Windsor Castle, the House of Lords, and in many public buildings.

On the Estimation of the value of Illuminating Gas.

There are two methods in use for estimating the illuminating value of gas, viz.—
1st. The photometric method.
2nd. Chemical analysis.

The photometric method consists in comparing the intensity of the light emitted by a gas flame, consuming a known volume of gas, with that yielded by some other source of light taken as a standard. The standard employed is usually a spermaceti candle, burning at the rate of 120 grains of sperm per hour. A spermaceti candle of six to the pound usually burns at a somewhat quicker rate than this; but in all cases the consumption of sperm by the candle during the course of each experiment ought to be carefully ascertained by weighing, and the results obtained corrected to the 120 grain standard. Thus, suppose that during an experiment the consumption of sperm was at the rate of 130 grains per hour, and that the gas flame being tested gave a light equal to 20 such candles, and it is required to know the light of this flame in standard 120 grain candles, then —

$$120 : 130 :: 20 :: 21{\cdot}7,$$

or, 20 candles burning at the rate of 130 grains per hour, are equal to 21·7 candles burning at the rate of 120 grains per hour.

There are two methods of estimating the comparative intensity of the light of the gas and candle flames, both founded upon the optical law that the intensity of light diminishes in the inverse ratio of the square of the distance from its source. Thus, if a sheet of writing paper be held at the distance of one foot from a candle, so that its surface is perpendicular to a line joining the centre of the sheet and the flame, it will be illuminated with a light four times as intense as that which would fall upon a sheet of paper held in the same position at a distance of 2 feet; whilst at a distance of 3 feet the light would have but $\frac{1}{9}$th of the intensity which it possessed at 1 foot. One method of estimating the comparative intensity of the gas and candle flames, consists in placing the two lights and an opaque rod nearly in a straight line, and in such a way as to cause each light to project a shadow of the rod upon a white screen placed at a distance of about 1 foot behind the rod. The two shadows must now be rendered of equal intensity by moving the candle either nearer to the rod or further from it. The shadows will be of equal intensity when the light falling upon the white screen from both sources is equal; and if now the respective distances of the candle and gas flame from the screen be measured, then the square of the distance of the gas flame divided by the square of the distance of the candle will give the illuminating power of the gas in candles. Thus, if equally intense shadows fall upon the screen when the candle is 3 feet distant and the gas flame 12 feet, the illuminating power of the gas flame will be —

$$\frac{12^2}{3^2} = \frac{144}{9} = 16 \text{ candles.}$$

This method of estimating the illuminating power of a gas flame, known as the *shadow test*, is very easy of execution, and would appear from the description to be capable of yielding results of considerable accuracy; nevertheless, an unexpected difficulty arises from the great difference in colour of the two shadows; that of the gas being of a bluish brown, whilst that of the candle is of a yellow brown tinge. This difference of tint renders it exceedingly difficult for the observer to ascertain when the two shadows possess equal intensity; and, consequently, the limits of error attending determinations by this test are probably, even in the hands of an experienced operator, never less than 5 per cent., and frequently even as much as 10 per cent. The shadow test has, therefore, been all but superseded by the *Bunsen's Photometer*, which consists of a graduated metal or wooden rod about 8 or 10 feet long, and sufficiently strong to be inflexible. At one extremity of this rod is placed the gas flame, and at the opposite end the standard candle. A stand which slides easily along the rod supports a small circular paper screen, at the same height as the two flames, and at right angles to the rod. This screen consists of colourless, moderately thin writing paper, saturated with a solution of spermaceti in spirit of turpentine,

Digitized by Google

except a spot in the centre, about the size of a shilling, which is to be left untouched by the solution. The spirit of turpentine soon evaporates, and the paper is now ready for use. Being more transparent in the portion which has been saturated with the spermaceti solution, it becomes a delicate test of equality of light when placed between two luminous bodies; for if the light of one of the bodies impinge with greater intensity upon one side of the screen than the other light does upon the opposite side, the difference in the transparency of the two portions of the screen will become distinctly visible; the spot in the centre appearing comparatively opaque on the less illuminated side. When the screen is brought into such a position between the two sources of light as to render the central spot nearly or quite invisible on both sides, the illuminating effect of both lights at that point may be regarded as equal; and all that now remains to be done is to measure the respective distances of the candle and gas from the screen, and divide the square of the distance of the gas by the square of that of the candle; the quotient expresses the illuminating power of the gas in candles. One of the most convenient forms of this instrument has been contrived by Mr. Wright, and may be had at 55, Millbank Street, Westminster. It consists of the following parts: —

488

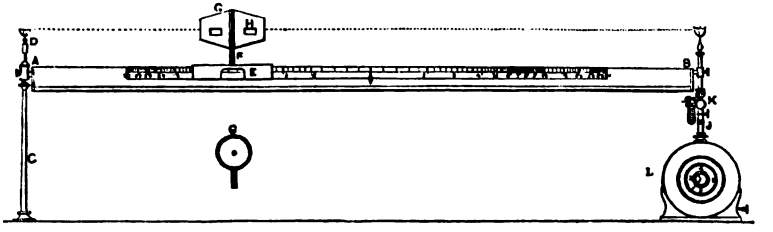

1. A wooden rod exactly 100 inches long (*fig.* 488) from the centres of sockets at its ends, A B.
2. An upright pillar, C.
3. A candle holder, D.
4. A mahogany slide, E, having a metal socket, F, on its top, to hold the circular frame, G, and a small pointer in its front.
5. A circular metal frame, G, made to hold a prepared paper.
6. A blackened conical screen, H, diminishing in size from its centre, where it opens with a hinge towards its ends, with two holes in front.

The long rod is graduated in accordance with the laws of distribution of light, from its centre each way into squares of distances in divisions numbered respectively 1, 2, 3, &c., to 36; to measure smaller differences than those amounting to 1 candle in value, each major division to 9 is subdivided into 10 parts, each, of course, representing $\frac{1}{10}$th of an increment. From thence to 20 the subdivisions indicate $\frac{1}{2}$. Beyond that point no subdivisions are made, because the major divisions become so small that, practically, such divisions would be useless.

The manner of fitting the apparatus together will be understood by reference to the annexed sketch.

The pillar, C, is screwed to one end of the shelf, and an experimental meter, L, placed at the other. This latter instrument is for measuring the quantity of gas passing to the burner, and indicating the rate of consumption by observations of one minute, which is accomplished by the construction of its index dial.

This dial has two circles upon its face, with a pointer to each; the outer circle divided into four, and the inner into six parts; and each of these again divided into tenths. Every major division of the outer circle is a *cubic foot*; and every major division of the inner circle is $\frac{1}{60}$th of a cubic foot; so that the major divisions on the inner circle each bear the same proportion to a cubic foot that a minute does to an hour. If, therefore, the number of these divisions and tenths of divisions, which the hand passes over in a minute, is observed, it will evidently only be necessary to read them off as feet and tenths of a foot to obtain the hourly rate of consumption.

Thus, suppose the pointer passes from the upper figure 6 to the fifth minor division beyond the figure 4, it would read off as $4\frac{5}{10}$ths and $\frac{5}{600}$ths of a cubic foot in $\frac{1}{60}$th of an hour. Multiplying these quantities by 60, we have $\frac{45}{60}$ths $\frac{5}{600}$ths $\times$ 60 = $\frac{2700}{600}$ths = $4\frac{1}{2}$ cubic feet, and $\frac{1}{60}$th $\times$ 60 = 1; so that $4\frac{1}{2}$ feet and 1 hour are obtained by simply reading off the divisions which had been passed as feet and tenths.

A pillar, J, having a pressure gauge and two cocks at K, one with a micrometer movement, screws on to the top of the meter, and is intended for receiving burners

Digitized by Google

when experimenting. The graduated rod is supported in an exactly horizontal position by the pillars C and J, and screwed together by its binding screws.

The candle socket D is screwed on to the top of C, and the mahogany slide C placed on the rod, with its pointer to the scale, carrying the frame G, containing a prepared paper, and covered by the cone H.

The prepared paper is made by coating white blotting-paper with sperm, so as to render it semi-transparent, leaving a small spot in the centre plain, and therefore opaque. See G in the figure.

All that now remains to render the apparatus ready for experimenting, is to put a piece of candle into the socket, and consume the gas through a proper burner over the meter, taking care that the *centres* of the *candle-flame, paper, and gas flame*, are in one *horizontal line*, and adopting the precautions previously laid down.

Unfortunately the determination of the exact point of equality of the two lights, is by no means easy, even after considerable practice; and the maximum amount of error to which even the practised operator is liable in such estimations of illuminating power, cannot be set down at less than 5 per cent. It is scarcely necessary to add that all photometric experiments must be conducted in an apartment from which all light from other sources is excluded, and the walls of which are rendered as absorbent as possible, by being coated with a mixture of lampblack and size, or by being hung with black lustreless calico.

Analytical method of estimating the value of illuminating gas. — Frankland has shown that the resources of chemical analysis, place in our hands a method for the determination of the illuminating value of gas considerably more accurate than the photometric processes just described, although the execution of the necessary operations requires more skill, and is usually much more troublesome. As the determination of the illuminating power of a sample of gas by the analytical method necessitates most of the operations required for the performance of a complete analysis of coal-gas, we shall here include in our description of the former process the additional details necessary for the latter.

1. *Collection of the sample of gas.* — In all analytical operations upon gases, it is of the utmost importance, that the latter should be preserved from all admixture with atmospheric air. This can only be done, either by collecting the samples of gas over mercury, or by enclosing them in hermetically sealed tubes. When the sample of gas is collected at the place where the analysis is to be made, the former plan is usually most convenient, but when the sample has to be obtained from a locality at some distance from the operator's laboratory, the latter plan is usually adopted. To collect a sample of gas over mercury, attach one end of a piece of vulcanised Indian-rubber tube to the gas pipe, and insert into the other extremity a piece of glass tube bent, as shown at A, *fig.* 489, allow the gas to stream through these tubes for two or three minutes, and then suddenly plunge the open extremity of the glass tube beneath the surface of the mercury in the trough C. Then fill the small gas jar B completely with mercury, taking care to remove all air bubbles from its sides by means of a piece of iron wire, and closing its mouth firmly with the thumb, invert it in the trough C, introducing the end of the bent tube A into its open extremity, in such a way as to bring the mouth of A above the level of the surface of the mercury in C. The gas will then flow into B, until the level of the mercury in B is somewhat lower than that of the metal in the trough. If now, the tube A being removed, a small cup be filled with mercury and brought beneath B, the latter may be removed from the trough, and will be thus preserved from any appreciable atmospheric intermixture for several months.

489

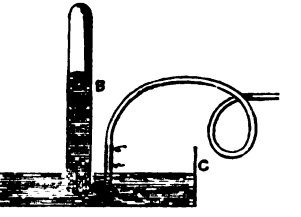

To collect samples of gas in hermetically sealed tubes, proceed as follows: take a piece of glass tube about ⅞ths of an inch internal diameter, and 1 foot long; draw it out at both ends before the blowpipe, as shown in *fig.* 490; attach one extremity, A *fig.* 491, to a vulcanised Indian-rubber tube, communicating with a source of the gas, and the opposite extremity B, to a similar flexible tube about three feet long, and which is allowed to hang down perpendicularly from B. After the gas has streamed through this system of tubes for about three minutes, so as to ensure the complete expulsion of atmospheric air, the flame of a mouth blowpipe is directed against the narrow portion of the glass tube at *c*, so as to fuse it off. With as much expedition as possible the same operation is performed at the opposite extremity of the tube *d*, which is thus hermetically sealed and assumes the appearance shown in *fig.* 492.

The gas having been thus carefully collected, the necessary analytical operations

Digitized by Google

must be conducted over mercury in a small wooden pneumatic trough, with plate glass sides, the construction of which is shown in *fig.* 493. A is a piece of hard well-

490 492

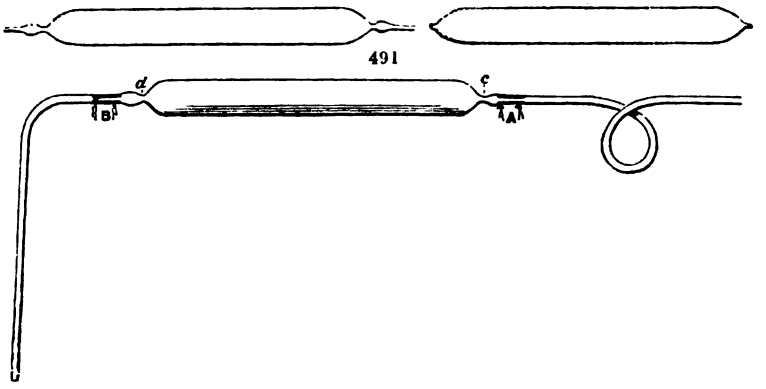

491

seasoned wood, 12 inches long and 3 inches broad, hollowed out, as shown in the figure; the cavity is 8¾ inches long, 1¾ inches broad, and 1¾ inches deep. The bottom of this cavity is rounded, with the exception of a portion at one end, where a surface, 1 inch broad, and 1½ inches long, is made perfectly flat, a piece of vulcanised Indian-rubber, $\frac{1}{10}$th of an inch thick, being firmly cemented upon it. Two end pieces, B B, ¾ths of an inch thick, 3¼ inches broad, and 5 inches high, are fixed to the block A; these serve below as supports for A, and above as the ends of a wider trough, which is formed by the pieces of plate glass C C, cemented into A and B B. The glass plates C C, are 10½ inches long, and 1⅞ inches high; they are slightly inclined, so that their

493

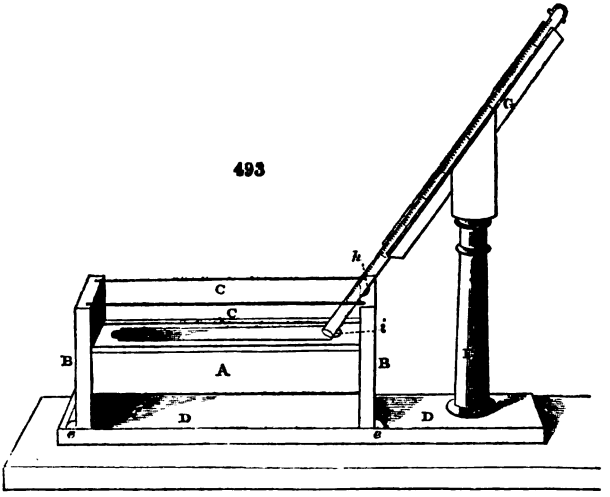

lower edges are about 2⅜ inches, and their upper edges 2⅞ inches apart. This trough stands upon a wooden slab D D, upon which it is held in its place by two strips of wood *e e*. An upright column F, which is screwed into D, carries the inclined stand G, which serves to support the eudiometer during the transference of gas. *h* is a circular inclined slot in H, which allows of the convenient inclination of the eudiometer in the stand G. *i* is an indentation in which the lower end of the eudiometer rests, so as to prevent its falling into the deeper portion of the trough A. When in use the trough is filled with quicksilver to within an inch of the upper edge of the glass plates C C, about 30 to 35 lbs. of the metal being necessary for this purpose.

The eudiometers or measuring tubes, should be accurately calibrated and graduated into cubic inches and tenths of a cubic inch, the tenths being subdivided by the eye

Digitized by Google

into hundredths, when the volume of gas is read off; this latter division is readily attained by a little practice. At each determination of volume, it is necessary that the gas should either be perfectly dry, or quite saturated with moisture. The first condition is attained by placing in the gas, for half an hour, a small ball of fused chloride of calcium, attached to a platinum wire*; the second condition, by introducing a minute drop of water into the head of the eudiometer, before filling it with quicksilver. The determinations of volume must either be made when the mercury is at the same level inside and outside the eudiometer, or, as is more frequently done, the difference of level must be accurately measured and allowed for in the subsequent reduction to a standard pressure. The height of the barometer and the temperature of the surrounding atmosphere must also be observed each time the volume of gas is measured, and proper corrections made for pressure, temperature, and also the tension of aqueous vapour, if the gas be moist. As tables and rules for these corrections are given in most treatises on chemistry, they need not be repeated here.

These troublesome corrections and calculations can be avoided by employing an instrument lately invented by Dr. Frankland and Mr. Ward, and which not only does away with the necessity for a room devoted exclusively to gaseous manipulations, but greatly shortens and simplifies the whole operation. This instrument, which is represented by *fig.* 494, consists of the tripod A, furnished with the usual levelling screws, and carrying the vertical pillar B B, to which is attached, on the one side, the movable mercury trough C, with its rack and pinion *a a*, and on the other, the glass cylinder D D, with its contents. This cylinder is 36 inches long, and 4 inches internal diameter; its lower extremity is firmly cemented into an iron collar *c*, the under surface of which can be screwed perfectly watertight upon the bracket plate *d* by the interposition of a vulcanised caoutchouc ring. The circular iron plate *d* is perforated with three apertures, into which the caps *e*, *e*, *e*, are screwed, and which communicate below the plate with the T piece E E. This latter is furnished with a double-way cock *f*, and a single-way cock *g*, by means of which the tubes cemented into the sockets *e*, *e*, *e*, can be made to communicate with each other, or with the exit pipe *h* at pleasure.

494

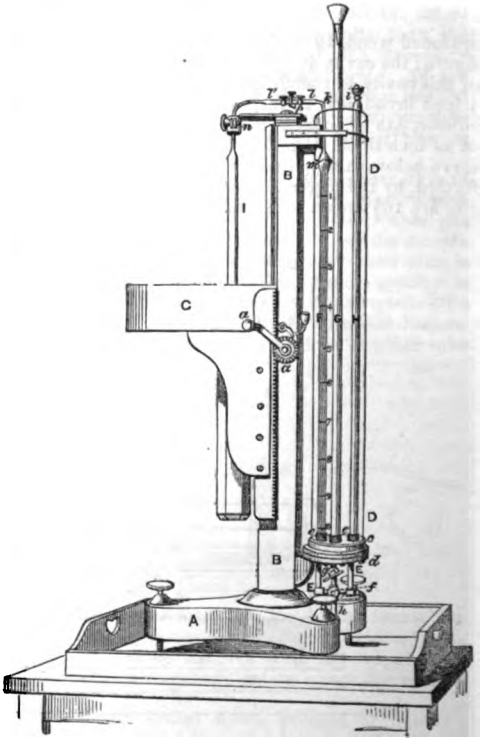

F, G, H, are three glass tubes, which are firmly cemented into the caps *e*, *e*, *e*. F and H, are each from 15 to 20 millimetres internal diameter, and are selected of as nearly the same bore as possible, to avoid a difference of capillary action. The tube G is somewhat wider, and may be continued to any convenient height above the cylinder. H is accurately graduated with a millimetre scale, and is furnished at top with a small funnel *i*, into the neck of which a glass stopper, about 2 millimetres in diameter, is carefully

* These balls, which should be of the size of a large pea, are required constantly in operations upon gases; they are readily prepared, when the substance of which they are formed is fusible by heat, as chloride of calcium or caustic potash, by melting these materials in a crucible and then pouring them into a small bullet-mould in which the curved end of a platinum wire has been placed; when quite cold the ball attached to the wire is readily removed from the mould. Coke bullets are made by filling the mould containing the platinum wire with a mixture of two parts of coke and one of coal, both finely powdered, and then exposing the mould and its contents to a heat gradually increased to redness, for a quarter of an hour.

Digitized by Google

ground. The tube F terminates at its upper extremity in the capillary tube *k*, which is carefully cemented into the small steel stopcock *l*. F has also fused into it at *m*, two platinum wires, for the passage of the electric spark. After this tube has been firmly cemented into the cap *e*, its internal volume is accurately divided into 10 perfectly equal parts, which is effected without difficulty by first filling it with mercury from the supply tube G, up to its junction with the capillary attachment, and then allowing the mercury to run off through the nozzle *k* until the highest point of its convex surface stands at the division 10, previously made so as exactly to coincide with the zero of the millimetre scale on H; the weight of the mercury thus run off is carefully determined, and the tube is again filled as before, and divided into 10 equal parts, by allowing the mercury to run off in successive tenths of the entire weight, and marking the height of the convexity after each abstraction of metal. By using the proper precautions with regard to temperature, &c., an exceedingly accurate calibration can, in this way, be accomplished.

The absorption tube I is supported by the clamp *n*, and connected with the capillary tube *k*, by the stopcock and junction piece *l l'*, *p*, as shown in the figure. When the instrument is thus far complete, it is requisite to ascertain the height of each of the nine upper divisions on the tube, above the lowest or tenth division. This is very accurately effected in a few minutes by carefully levelling the instrument, filling the tube G with mercury, opening the cock *l*, and the stoppered funnel *i*, and placing the cock *f* in such a position as to cause the tubes F H to communicate with the supply tube G. On now slightly turning the cock *g*, the mercury will slowly rise in each of the tubes F and H; when its convex surface exactly coincides with the ninth division on F, the influx of metal is stopped, and its height in H accurately observed; as the tenth division on F corresponds with the zero of the scale upon H, it is obvious that the number thus read off is the height of the ninth division above that zero point. A similar observation for each of the other divisions upon F completes the instrument.*

Before using the apparatus, the large cylinder D D is filled with water, and the internal walls of the tubes F and H are, once for all, moistened with distilled water, by the introduction of a few drops into each, through the stopcock *l*, and the stoppered funnel *i*. The three tubes being then placed in communication with each other, mercury is poured into G until it rises into the cup *i*, the stopper of which is then firmly closed. When the mercury begins to flow from *l*, that cock is also closed. The tubes F and H are now apparently filled with mercury, but a minute and imperceptible film of air still exists between the metal and glass; this is effectually got rid of by connecting F and H with the exit tube *h*, and allowing the mercury to flow out, until a vacuum of several inches in length has been produced in both tubes; on allowing the instrument to remain thus for an hour, the whole of the film of air above mentioned will diffuse itself into the vacuum, to be filled up from the supply tube G. These bubbles are of course easily expelled on momentarily opening the cock *l* and the stopper *i* whilst G is full of mercury. The absorption tube I being then filled with quicksilver, and attached to *l* by the screw clamp, the instrument is ready for use.

In illustration of the manner of using the apparatus, a complete description of an analysis of coal-gas by this instrument will be given below.

For the analysis of purified coal-gas by means of the mercury trough and eudiometer, the following operations are necessary:—

I. Estimation of Carbonic Acid.

A few cubic inches of the gas are introduced into a short eudiometer, moistened as above described; the volume is accurately noted, with the proper corrections, and a bullet of caustic potash is then passed up through the mercury into the gas. it is allowed to remain for at least one hour; the volume of the gas being again ascertained and subtracted from the first volume gives the amount of carbonic acid which has been absorbed by the potash.

II. Estimation of Oxygen.

This gas can be very accurately estimated by Liebig's method, which depends upon the rapid absorption of oxygen by an alkaline solution of pyrogallic acid. To apply this solution, a small test tube is filled with quicksilver, and inverted in the mercury trough; a few drops of a saturated solution of pyrogallic acid in water are thrown up into this tube by means of a pipette, and then a similar quantity of a strong solution of potash; a coke bullet attached to a platinum wire is introduced into this liquid, and allowed to saturate itself; it is then withdrawn, and conveyed carefully

* This instrument may be obtained from Mr. Oertling, philosophical instrument maker, 27 Moorgate Street, E.C.

Digitized by Google

below the surface of the mercury into the eudiometer containing the residual gas of experiment No. 1; every trace of oxygen will be absorbed in a few minutes, when the bullet must be removed, and the volume being again measured, the diminution from the last reading will represent the amount of oxygen originally present in the gas. It is essential that the coke bullet, after saturation with the alkaline solution of pyrogallic acid, should not come in contact with the air before its introduction into the gas.

III. Estimation of the Luminiferous Constituents.

Various methods have been employed for the estimation of the so-called olefiant gas (luminiferous constituents) contained in coal-gas. The one which has been most generally employed, depends upon the property which is possessed by olefiant gas, and most hydrocarbons, of combining with chlorine, and condensing to an oily liquid: hydrogen and light carburetted hydrogen are both acted upon in a similar manner when a ray even of diffused light is allowed to have access to the mixture; but the condensation of the olefiant gas and hydrocarbons takes place in perfect darkness, and advantage is therefore taken of this circumstance to observe the amount of condensation which takes place when the mixture is excluded from light. The volume, which disappears during this action of the chlorine, is regarded as indicating the quantity of olefiant gas present in the mixture. There are many sources of error inseparably connected with this method of operating, which render the results unworthy of the slightest confidence; the same remark applies also to the employment of bromine in the place of chlorine; in addition to the circumstance that these determinations must be made over water, which allows a constant diffusion of atmospheric air into the gas, and *vice versâ*, there is also formed in each case a volatile liquid, the tension of the vapour of which increases the volume of the residual gas; and this increase admits of neither calculation nor determination. The only material by which the estimation of the luminiferous constituents can be accurately effected is anhydrous sulphuric acid, which immediately condenses the luminiferous constituents of coal-gas, but has no action upon the other ingredients, even when exposed to sunlight. The estimation is conducted as follows:—A coke bullet, prepared as described above, and attached to a platinum wire, being rendered thoroughly dry by slightly heating it for a few minutes, is quickly immersed in a saturated solution of anhydrous sulphuric acid, in Nordhausen sulphuric acid, and allowed to remain in the liquid for one minute; it is then withdrawn, leaving as little superfluous acid adhering to it as possible, quickly plunged beneath the quicksilver in the trough, and introduced into the same portion of dry gas, from which the carbonic acid and oxygen have been withdrawn by experiments I. and II.; here it is allowed to remain for about two hours, in order to ensure the complete absorption of every trace of hydrocarbons. The residual volume of gas cannot, however, yet be determined, owing to the presence of some sulphurous acid derived from the decomposition of a portion of the sulphuric acid: this is absorbed in a few minutes by the introduction of a moist bullet of peroxide of manganese, which is readily made by converting powdered peroxide of manganese into a stiff paste with water, rolling it into the shape of a small bullet, and then inserting a bent platinum wire, in such a manner as to prevent its being readily drawn out; the ball should then be put in a warm place, and allowed slowly to dry, it will then become hard, and possess considerable cohesion, even after being moistened with a drop of water, previous to its introduction into the gas. After half an hour, the bullet of peroxide of manganese may be withdrawn, and replaced by one of caustic potash, to remove the watery vapour introduced with the previous one; at the end of another half-hour, this bullet may be removed, and the volume of the gas at once read off. The difference between this and the previous reading, gives the volume of the luminiferous constituents contained in the gas. This method is very accurate; in two analyses of the same gas, the percentage of luminiferous constituents seldom varies more than 0.1 or 0.2 per cent.

IV. Estimation of the Non-Luminiferous Constituents.

These are light carburetted hydrogen, hydrogen, carbonic oxide, and nitrogen. The percentages of these gases are ascertained in a graduated eudiometer, about 2 feet in length, and $\frac{3}{4}$ths of an inch internal diameter; the thickness of the glass being not more than $\frac{1}{10}$th of an inch. This eudiometer is furnished at its closed end with two platinum wires, fused into the glass, for the transmission of the electric spark. A drop of water, about the size of a pin's head, is introduced into the upper part of the eudiometer before it is filled with mercury and inverted into the mercurial trough: this small quantity of water serves to saturate with aqueous vapour the gases subsequently introduced. About a cubic inch of the residual gas from the last determination is passed into the eudiometer, and its volume accurately

Digitized by Google

read off; about 4 cubic inches of pure oxygen are now introduced, and the volume (moist) again determined. The oxygen is best prepared at the moment when it is wanted, by heating over a spirit or gas flame a little chlorate of potash, in a very small glass retort, allowing of course sufficient time for every trace of atmospheric air to be expelled from the retort before passing the gas into the eudiometer. The open end of the eudiometer must now be pressed firmly upon the thick piece of india-rubber placed at the bottom of the trough, and an electric spark passed through the mixture; if the above proportions have been observed the explosion will be but slight, which is essential if nitrogen be present in the gas, as this element will otherwise be partially converted into nitric acid, and thus vitiate the results. By using a large excess of oxygen, all danger of the bursting of the eudiometer by the force of the explosion is also avoided. The volume after explosion being again determined, a bullet of caustic potash is introduced into the gas, and allowed to remain so long as any diminution of volume takes place; this bullet absorbs the carbonic acid that has been produced by the combustion of the light carburetted hydrogen and carbonic oxide, and also renders the residual gas perfectly dry; the volume read off after this absorption, when deducted from the previous reading, gives the volume of carbonic acid generated by the combustion of the gas.

The residual gas now contains only nitrogen and the excess of oxygen employed. The former is determined by first ascertaining the amount of oxygen present, and then deducting that number from the volume of both gases; for this purpose a quantity of dry hydrogen, at least three times as great as the residual gas, is introduced, and the volume of the mixture determined; the explosion is then made as before, and the volume (moist) again recorded: one-third of the contraction caused by this explosion represents the volume of oxygen, and this deducted from the volume of residual gas, after absorption of carbonic acid, gives the amount of nitrogen.

The behaviour of the other three non-luminous gases on explosion with oxygen enables us readily to find their respective amounts by three simple equations, founded upon the quantity of oxygen consumed, and the amount of carbonic acid generated by the three gases in question. Hydrogen consumes half its own volume of oxygen, and generates no carbonic acid; light carburetted hydrogen consumes twice its volume of oxygen, and generates its own volume of carbonic acid; whilst carbonic oxide consumes half its volume of oxygen, and generates its own volume of carbonic acid. If, therefore, we represent the volume of the mixed gases by A, the amount of oxygen consumed by B, and the quantity of carbonic acid generated by C, and further, the volumes of hydrogen, light carburetted hydrogen, and carbonic oxide respectively by x, y, and z, we have the following equations:—

$$\begin{aligned} x + y + z &= A \\ \tfrac{1}{2}x + 2y + \tfrac{1}{2}z &= B \\ y + z &= C \end{aligned}$$

From which the following values for x, y, and z are derived:—

$$\begin{aligned} x &= A - C \\ y &= \frac{2B - A}{3} \\ z &= C - \frac{2B - A}{3} \end{aligned}$$

V.—Estimation of the value of the Luminiferous Constituents.

We have now given methods for ascertaining the respective quantities of all the ingredients contained in any specimen of coal-gas, but the results of the above analytical operations afford us no clue to its illuminating power. They give us, it is true, the amount of illuminating hydrocarbons contained in a given volume of the gas, but it will be evident, from what has already been said respecting the luminiferous powers of these hydrocarbons, that the greater the amount of carbon contained in a given volume, the greater will be the quantity of light produced on their combustion; and therefore, as the number of volumes of carbon vapour contained in one volume of the mixed constituents, condensible by anhydrous sulphuric acid, has been found to vary from 2·54 to 4·36 volumes, it is clear that this amount of carbon vapour must be accurately determined for each specimen of gas, if we wish to ascertain the value of that gas as an illuminating agent. Fortunately this is easily effected; for if we ascertain the amount of carbonic acid generated by 100 volumes of the gas in its original condition, knowing from the preceding analytical processes the percentage of illuminating hydrocarbons, and also the amount of carbonic acid generated by the non-luminiferous gases, we have all the data for calculating the illuminating value of the gas. For this purpose a known volume of the original gas (about one cubic inch) is introduced

Digitized by Google

into the explosion eudiometer, and mixed with about five times its volume of oxygen, the electric spark is passed, and the volume of carbonic acid generated by the explosion ascertained as above directed. If we now designate the percentage of hydrocarbons absorbed by anhydrous sulphuric acid by A, the volume of carbonic acid generated by 100 volumes of the original gas by B, the carbonic acid formed by the combustion of the non-luminous constituents remaining after the absorption of hydrocarbons from the above quantity of original gas by C, and the volume of carbonic acid generated by the combustion of the luminiferous compounds (hydrocarbons) by x, we have the following equation:—

$$x = B - C$$

and therefore the amount of carbonic acid generated by one volume of the hydrocarbons is represented by

$$\frac{B - C}{A}$$

But as one volume of carbon vapour generates one volume of carbonic acid, this formula also expresses the quantity of carbon vapour in one volume of the illuminating constituents. For the purpose of comparison, however, it is more convenient to represent the value of these hydrocarbons in their equivalent volume of olefiant gas, one volume of which contains two volumes of carbon vapour; for this purpose the last expression need only be changed to

$$\frac{B - C}{2\,A}$$

Thus, if a sample of gas contain 10 per cent. of hydrocarbons, of which one volume contains three volumes of carbon vapour, the quantity of olefiant gas to which this 10 per cent. is equivalent, will be 15.

By the application of this method we obtain an exact chemical standard of comparison for the illuminating value of all descriptions of gas; and by a comparison of the arbitrary numbers thus obtained, with the practical results yielded by the same gases when tested by the photometer, much valuable and useful information is gained.

Analysis of coal-gas with Franklund and Ward's apparatus.—Introduce a few cubic inches of the gas into the tube I, *fig.* 494, and transfer it for measurement into F, by opening the cocks *l l'* and placing the tube F in communication with the exit pipe *h*, the transference being assisted, if needful, by elevating the trough C. When the gas, followed by a few drops of mercury, has passed completely into F, the cock *l* is shut, and *f* turned, so as to connect F and H with *h*. Mercury is allowed to flow out until a vacuum of two or three inches in length is formed in H, and the metal in F is just below one of the divisions; the cock *f* is then reversed, and mercury very gradually admitted from G, until the highest point in F exactly corresponds with one of the divisions upon that tube; we will assume it to be the sixth division. This adjustment of mercury and the subsequent readings can be very accurately made by means of a small horizontal telescope placed at a distance of about six feet from the cylinder, and sliding upon a vertical rod. The height of the mercury in H must now be accurately determined, and if from the number thus read off, the height of the sixth division above the zero of the scale on H be deducted, the remainder will express the true volume of the gas. As the temperature is maintained constant during the entire analysis, no correction on that score has to be made; the atmospheric pressure being altogether excluded from exerting any influence upon the volumes or pressures, no barometrical observations are requisite; and as the tension of aqueous vapour in F is exactly balanced by that in H, the instrument is in this respect also self-correcting. Two or three drops of a strong solution of caustic potash are now introduced into I by means of a bent pipette, and mercury being allowed to flow into F and H by opening the cock *g*, the gas returns into I through *l l'*, and there coming into contact with an extensive surface of caustic potash solution, any carbonic acid that may be present will be absorbed in two or three minutes, and the gas being passed back again into H for remeasurement, taking care to shut *l* before the caustic potash solution reaches *l'*, the observed diminution in volume gives the amount of carbonic acid present.

The amount of oxygen is determined in like manner by passing up into I a few drops of a saturated solution of pyrogallic acid, which forms with the potash already present pyrogallate of potash. The gas being then brought back into I, oxygen, if present, will be absorbed in a few minutes. Its amount is of course ascertained by remeasuring the gas in F.

The next step in the operation consists in estimating the amount of olefiant gas and illuminating hydrocarbons. For this purpose, whilst the gas, thus deprived of oxygen and carbonic acid, is contained in F, the tube I must be removed, thoroughly cleansed and dried, and being filled with mercury, must be again attached to *l*. The gas must

Digitized by Google

now be transferred from F to I, and a coke bullet, prepared as above described, being passed up into I, must be allowed to remain in the gas for one hour. After its removal, a few drops of a strong solution of bichromate of potash must be admitted into I in order to absorb the sulphurous acid and vapours of anhydrous sulphuric acid resulting from the previous operation. The gas is now ready for measurement; it is therefore passed into F, and its volume determined; the diminution which has occurred since the last reading represents the volume of olefiant gas and illuminating hydrocarbons that were present in the gas.

It now only remains to determine the respective amounts of light carburetted hydrogen, carbonic oxide, hydrogen, and nitrogen present in the residual gas. This is effected as follows:—As much of the residual gas as will occupy about 1½ inches of its length at atmospheric pressure is retained in F, and its volume accurately determined; the remainder is passed into J, and the latter tube removed, cleansed, filled with mercury, and reattached. A quantity of oxygen equal to about three and a half times that of the combustible gas is now added to the latter, and the volume again determined; then the mixture having been expanded to about the sixth division, an electric spark is passed through it by means of the wires at *m*. The contraction resulting from the explosion having been noted, two or three drops of caustic potash solution are passed into J, and the gas is then transferred into the same tube. In two minutes the carbonic acid generated by the explosion is perfectly absorbed, and its volume is determined by a fresh measurement of the residual gas. The latter must now be exploded with three times its volume of hydrogen, and the contraction on explosion noted. These operations furnish all the data necessary for ascertaining the relative amounts of light carburetted hydrogen, carbonic oxide, hydrogen, and nitrogen, according to the mode of calculation given above.

Finally, the value of the luminiferous constituents is obtained as before, by exploding about a cubic inch of the original specimen of gas with from four to five times its volume of oxygen, and noting the amount of carbonic acid produced.

On the Manufacture of Coal-Gas.

Coal gas, as usually manufactured, is produced by exposing coal to a bright-red heat in retorts. The gas as it issues from the retort cannot be directly employed for illumination, for it contains vapours of tar and naphtha, as also steam impregnated with carbonate of ammonia and hydrosulphate of sulphide of ammonium. These vapours would readily condense in the pipes through which the gas must be distributed, and would produce obstructions; they must therefore be so far removed by previous cooling, as to be liable to occasion no troublesome condensation at ordinary temperatures. The crude coal-gas contains moreover sulphuretted hydrogen, whose combustion for light would exhale an offensive sulphureous odour, that ought to be avoided as much as possible. Carbonic acid enfeebles the illuminating power of the gas, and should be removed. The disengagement of gas in the retorts is never uniform, but varies at the different stages of the process; for which reason the gas must be received in a gas holder, where it may experience uniform pressure, and be discharged uniformly into the pipes of distribution, in order to ensure a steady discharge of gas, and uniform intensity of light in the burners. A coal-gas apparatus ought therefore to be so constructed as not only to generate the gas itself, but to fulfil the above conditions.

In *fig.* 495, such an apparatus is represented, where the various parts are shown connected with each other in section.

A is the furnace, with its set of cylindrical or elliptical retorts, five in number. From each of these retorts, a tube *b* proceeds perpendicularly upwards, and then by a curve or saddle-tube, it turns downwards, where it enters a long horizontal cylinder under B, shut at each end with a screw cap, and descends to beneath its middle, so as to dip about an inch into the water contained in it. From one end of this cylinder, the tube *d* passes downwards, to connect itself with a horizontal tube which enters into the *tar pit* or *cistern* C, by means of the vertical branch *f*. This branch reaches to near the bottom of the cylindrical vessel, which sits on the sole of the tar cistern. From the other side of the vertical branch *f*, the main pipe proceeds to the condenser D, and thence by the pipe *l*, into the purifier E; from which the gas is immediately transmitted by the pipe *p* into the gasometer F.

The operation proceeds in the following way:—As soon as gas begins to be disengaged from the ignited retort, tar and ammoniacal liquor are deposited in the cylindrical receiver B, and fill it up till the superfluity runs over by the pipe *d*, the level being constantly preserved at the line shown in the figure. By the same tarry liquid, the orifices of the several pipes *b*, issuing from the retorts are closed; whereby the gas in the pipe *d* has its communication cut off from the gas in the retorts. Hence if one of the retorts be opened and emptied, it remains shut off from the rest of the apparatus. This insulation of the several retorts is the function of the pipe

Digitized by Google

under B, and therefore the recurved tube *b*, must be dipped as far under the surface of the tarry liquid as to be in equilibrio with the pressure of the gas upon the water in the purifier. The tube *b* is closed at top with a screw cap, which can be taken off at pleasure, to permit the interior to be cleansed.

Both by the overflow from the receiver pipe B, and by subsequent condensation in the tube *d*, tar and ammoniacal liquor collect progressively in the cistern or pit under C, by which mingled liquids the lower orifice of the vertical tube *f* is closed, so that the gas cannot escape into the empty space of this cistern. These liquids flow over the edges of the inner vessel when it is full, and may, from time to time, be drawn off by the stopcock at the bottom of the cistern.

Though the gas has, in its progress hitherto, deposited a good deal of its tarry and ammoniacal vapours, yet, in consequence of its high temperature, it still retains a considerable portion of them, which must be immediately abstracted, otherwise the tar would pollute the lime in the vessel E, and interfere with its purification. On this account the gas should, at this period of the process, be cooled as much as possible, in order to condense these vapours, and to favour the action of the lime in the purifier E, upon the sulphuretted hydrogen, which is more energetic the lower the temperature of the gas. The coal-gas passes, therefore, from the tube *f* into the tube *h* of the condenser D, which is placed in an iron chest *g*, filled with water, and it deposits more tar and ammoniacal liquor in the under part of the cistern at *t*, *t*. When these liquids have risen to a certain level, they overflow into the tar-pit, as shown in the figure, to be drawn off by the stopcock, as occasion may require.

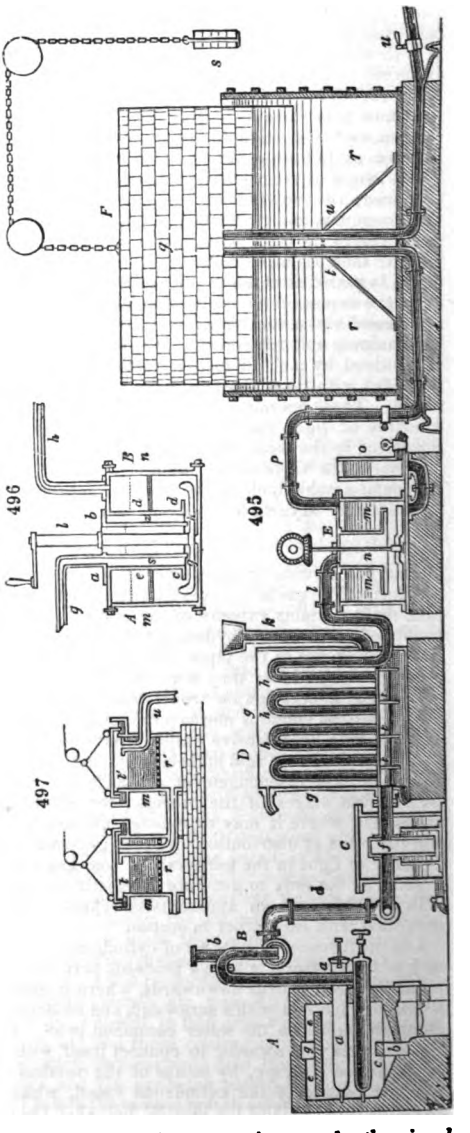

The refrigerated gas is now conducted into the purifier E, which we will suppose to be filled with milk of lime, made by mixing 1 part of slaked lime with 25 parts of water. The gas, as it enters by the pipe *l*, depresses the water in the wide cylinder *n*, thence passes under the perforated disc in the under part of that cylinder, and rising up through innumerable small holes is distributed throughout the lime liquid in the vessel *m*. By contact with the lime on this extended surface, the gas is stripped of its sulphuretted hydrogen and carbonic acid, which are condensed into the sulphide of calcium and carbonate of lime; it now enters the gasholder F in a purified state, through the pipe *p t*, and occupies the space *q*. The gasholder pressing with a small unbalanced force over the counterweight *s*, expels it through the main *u u*, in communication with the pipes of distribution through the buildings or streets to be illuminated.

Digitized by Google

Such are the chief and essential parts of the apparatus used in every gas work for the generation, refrigeration, purification, and storage of coal-gas. The construction and mode of working these separate portions of the apparatus vary much, however, in different works, and it will therefore be necessary here to enter more minutely into the details of the four departments of the manufacture just enumerated.

I. Apparatus used in the Generation of Coal-Gas.

Retorts.—The use of this portion of the apparatus is to expose the coal to a high temperature, to exclude atmospheric air, and to deliver the gaseous and vaporous products of distillation into the refrigeratory portion of the apparatus. The materials composing the retorts should therefore possess the following properties:—1st, high conducting power for heat; 2nd, rigidity and indestructibility at a high temperature; and 3rd, impermeability to gaseous matter. The materials hitherto used in the construction of retorts are cast-iron, wrought-iron, and earthenware; but none of these materials possess the above qualifications in the high degree that could be wished. Thus cast-iron, though a good conductor of heat, is not perfectly rigid and indestructible. At high temperatures it becomes slightly viscous, and at the same time undergoes rapid oxidation. Wrought-iron is a still better conductor of heat, but its qualities of indestructibility and rigidity are even lower than those of cast-iron; whilst earthenware, though rigid, and indestructible by oxidation, is a very bad conductor of heat, and is moreover very liable to crack from changes of temperature. Very various forms of retort have been employed at different times in order to secure as far as possible, the conditions just enumerated.

Cast-iron retorts.—The chief forms of the cast-iron retorts are: First, the cylindrical,

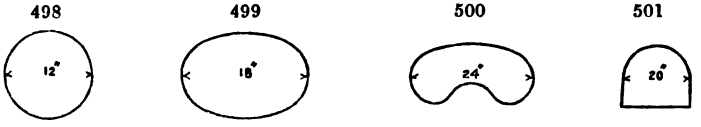

fig. 498, used in the Manchester Gas Works, 12 inches diameter, and 6 to 9 feet long; Second, the elliptical, 18 inches by 12 inches, by 6 to 9 feet, *fig.* 499; Third, the ear shape, *fig.* 500, now little used, 2 feet by 9 inches, and of the same length as before; Fourth, the D-shaped retort, *fig.* 501, 20 inches wide and 14 inches high. This form of retort is at present far more extensively used than any of the others.

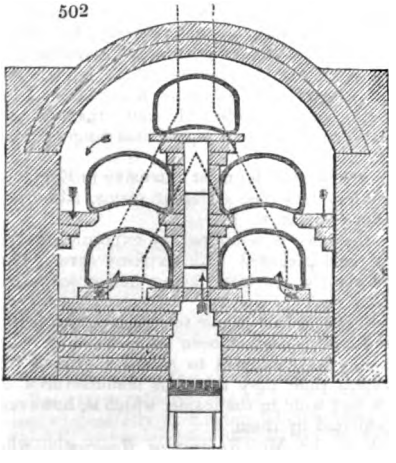

Fig. 502 shows a bed of 5 D-shaped iron retorts. The length is 7½ feet, and the transverse area, from one foot to a foot and a half square. The arrows show the direction of the flame and draught.

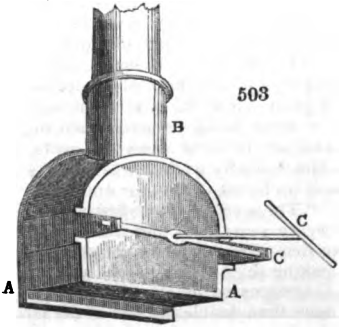

The charge of coals is most conveniently introduced in a tray of sheet-iron, made somewhat like a grocer's scoop, adapted to the size of the retort, which is pushed home to its further end, inverted so as to turn out the contents, and then immediately withdrawn.

All these retorts are set horizontally in the furnace, and they have a flanch cast upon their open end, to which a mouthpiece, A A, *fig.* 503, can be securely bolted. The mouthpiece is provided with a socket, B, for the reception of the *standpipe*, and also

Digitized by Google

with an arrangement by which a lid, c c, can be screwed gas-tight upon the front of the mouthpiece as soon as the charge of coal has been introduced. By applying a luting of lime mortar to that part of the lid which comes into contact with the mouthpiece, a perfectly tight joint is obtained.

Sometimes iron retorts are made of double the above length, passing completely through the furnace, and being furnished with a lid and standpipe at each end. Such is the construction of Mr. Croll's and of Lowe's reciprocating retorts. These retorts are charged from each end alternately, and there is an arrangement of valves by means of which the gas evolved from the coal recently introduced is made to pass over the incandescent coke of the previous charge, at the opposite end of the retort. It is highly probable that some advantage is derived from this arrangement during the very early stage of the distillation of the fresh coal; but on the whole, for reasons stated above, the principle is undoubtely bad, for although it enables the manufacturer to produce a larger volume of gas, the quality is so much inferior as to reduce the total illuminating effect obtainable from a given weight of coal.

Wrought-iron retorts. — Mr. King, the eminent engineer of the Liverpool Gas Works, has for many years successfully used retorts of wrought-iron. They are made of thick boiler plates, riveted together, and are of the D shape, 5½ feet wide, 6 feet long, and 18 inches high at the crown of the arch. About 1 ton of coal can be worked off in these retorts in 24 hours. Occasionally the bottoms are of cast-iron, which materially prevents the great amount of warping to which wrought-iron is subject when exposed to high temperatures.

Earthenware, or clay retorts. — These are usually of the D shape, although they are occasionally made circular or elliptical. Their dimensions are about the same as those of the cast iron retorts commonly used, but their walls are necessarily thicker, varying from 2½ to 4 inches in thickness; this, added to the circumstance that clay is a very bad conductor of heat, undoubtedly causes the expenditure of a larger amount of fuel in heating these retorts; nevertheless, this disadvantage is, perhaps, less than might be supposed, since iron retorts soon become coated outside with a thick layer of oxide of iron, which also greatly hinders the free communication of heat to the iron beneath. Moreover, the lower price and much greater durability of clay retorts, are causing their almost universal adoption in gas works, especially since the removal of pressure by exhausters greatly reduces the amount of leakage to which clay retorts are liable.

The following is an extract relating to clay retorts, from the "Reports of Juries" of the great Exhibition of 1851:

"The use of fire-clay is not of very ancient date, and has greatly increased within the last few years. It is found in England almost exclusively in the coal measures, and from different districts the quality is found to differ considerably. The so-called "Stourbridge clay," is the best known, and will be alluded to presently; but other kinds are almost, if not quite, as well adapted for the higher purposes of manufacture, being equally free from alkaline earths and iron, the presence of which renders the clay fusible when the heat is intense. The proportions of silica and alumina in these clays vary considerably, the former amounting sometimes to little more than 50 per cent., while in others it reaches beyond 70, the miscellaneous ingredients ranging from less than ½ to upwards of 7 per cent.

"The works of Messrs. Cowen and Co. are among the most extensive in England, and they obtain their raw material from no less than nine different seams, admitting of great and useful mixture of clay for various purposes.

"After being removed from the mine, the clay is tempered by exposure to the weather, in some cases for years, and is then prepared with extreme care. The objects chiefly made are fire-bricks and gas retorts; the latter being now much used, and preferred to iron for durability.

"These retorts were first made by the present exhibitors in ten pieces (this being twenty years ago), and since then the number of pieces has been reduced successively to four, three, and two pieces, till in 1844 they were enabled to patent a process for making them in one piece, and at the present time they are thus manufactured of dimensions as much as 10 feet long by 3 feet wide in the inside, which is, however, more than double the size of the largest exhibited by them.

"Gas retorts of very fair quality are shown by Mr. Ramsay of Newcastle, who has also succeeded extremely well in the manufacture of fire-bricks. The retorts show a little more iron than is desirable, but the exhibitor has been considered worthy of honourable mention. Retorts of less creditable appearance are exhibited by Messrs. Hickman and Co. of Stourbridge, and Mr. A. Potter of Newcastle. The surface of both these retorts is cracked and undulating. When we consider the high and long continued temperature to which these objects are exposed, the absolute necessity of attending to every detail in mixing the clay and moulding the retort will be at once

Digitized by Google

recognised, and the apparently slight defects of some of those sent for exhibition require to be noticed as of real importance.

"Next to England, the finest specimens of fire-clay goods on a large scale are from Belgium: the gas retort sent from France is not remarkable for excellence."

Fig. 504 is an elevation of Mr. Wright's plan for a range of long clay retorts.

504

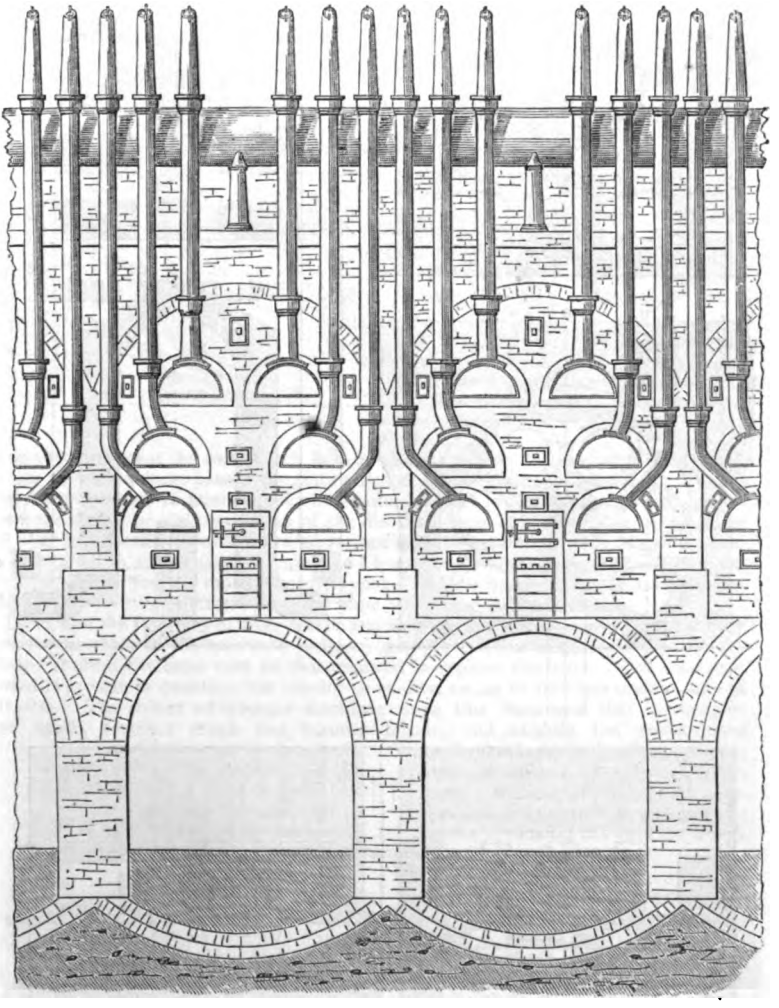

Fig. 505 shows the plans and sections of the setting for these retorts.

Retorts, or rather ovens, of fire-brick, the invention of Mr. Spinney, have been long used successfully at Exeter, Cheltenham, and other places. They appear to be very durable, and to require little outlay for repairs, but a very large expenditure of fuel is required for heating them. They are of the D shape, 7 feet long, 3 feet 2 inches wide, and 14 inches high at the crown of the arch. Each retort receives a charge of 5 or 6 cwt. of Newcastle or Welsh coal every 12 hours, and produces gas at the rate of 9000 cubic feet per ton of Welsh, and 10,000 to 12,000 per ton of Newcastle coal.

Clegg's revolving web retort.—This retort, the invention of Mr. Clegg, sen., makes the nearest approach to a truly philosophical apparatus for the generation of gas; in it the coal is exposed to a sudden and uniform heat, in a thin stratum, by which means the

Digitized by Google

gases are liberated at once, and under the conditions most favourable for the production of a maximum amount of illuminating constituents. Very little tar is produced from this retort.

505

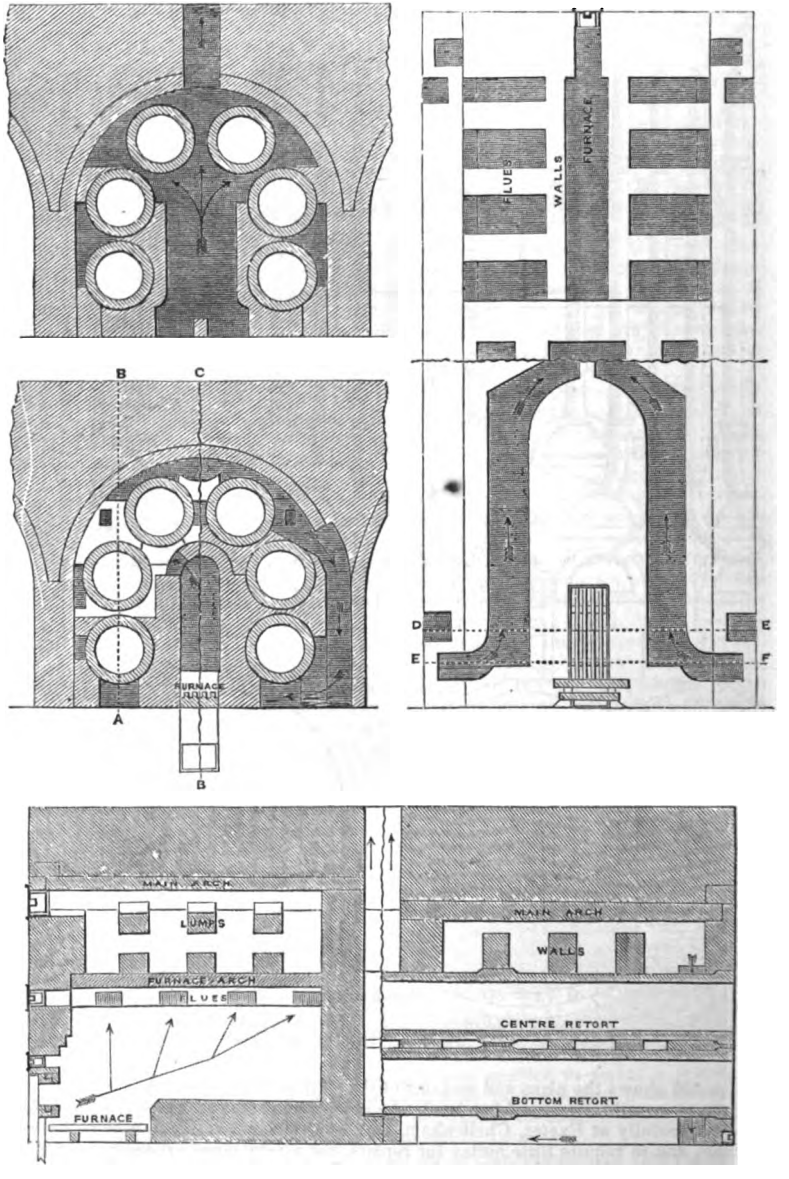

Fig. 506 represents a section of this retort, which is of the D shape, with a very low and flat arch. It is made of wrought-iron boiler plates riveted together. E is a hopper for holding the coal to be carbonised; F is a discharging disc; G is the retort; H is a web on to which the coal is discharged by the disk F; I I are revolving drums carrying the wrought-iron web H; L L are the flues from a lateral furnace by which the retort is heated; M is the exit pipe for the coke, its lower extremity is either closed by an airtight door, or is made to dip into water.

Digitized by Google

All the coal must be reduced to fragments about the size of coffee berries, and a 24 hours' charge must be placed at once in the hopper, and secured by a luted cover. The discharging disc has 6 spurs, and is made to revolve uniformly with the drum below it at the rate of 4 revolutions per hour. The diameter of the hexagonal drums

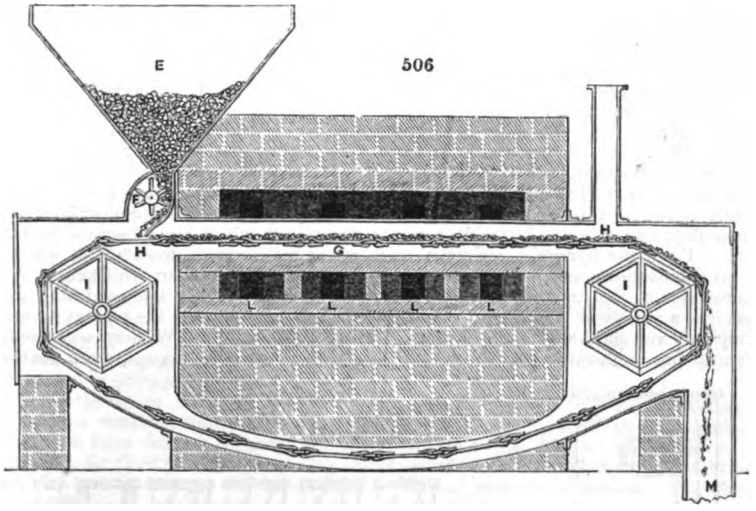

is so regulated, that the coal, which falls upon the web from the discharging disc, will at one revolution have passed the entire length of the retort. The passage through the retort occupies 15 minutes, which is quite sufficient to expel the whole of the gas from the coal. In each revolution of the disc and drum 745 cubic inches of coal (or 21 lbs.) are distributed over a heated surface of 2016 square inches. 18 cwt. of coal is carbonised in one of these retorts in 24 hours, and the production of gas is equal to 12,000 cubic feet per ton of Newcastle coal. The quality of the gas is also considerably superior to that obtained from the same coal in the ordinary retorts.

Although the first cost of these retorts and accompanying machinery is considerably greater than that of the retorts in ordinary use, yet the destructible parts can be replaced at about the same cost as that required to replace the latter. The coke produced is greater in quantity, but inferior in quality, owing to its more minute state of division. The minor advantages attendant upon this form are, that it occupies less space, requires much less manual labour, and enables the retort-house to be kept perfectly clean, wholesome, and free from suffocating vapour. If the principle of this plan could be combined with less complication of details, it would no doubt come into extensive use.

507

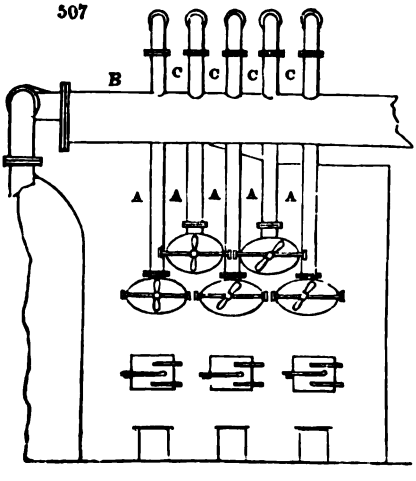

II. The Refrigeratory Apparatus.

From the moment that the gas leaves the retorts it is subjected to cooling influences which gradually reduce its temperature, until on leaving the so-called condenser its temperature ought to be only a few degrees higher than that of the atmosphere, except in winter, when it is advisable to maintain a heat, relatively to the external air, greater than in summer. The gas leaves the retort by the *standpipes*, A A A, *fig.* 507, which are of cast-iron, 5 inches in diameter at their lower extremity, and slightly

Digitized by Google

tapering upwards. Some of the least volatile products of decomposition condense in these pipes, but their proximity to the furnaces, and the constant rush of heated gas and vapour through them prevent more than a very slight amount of refrigeration. They conduct to the *hydraulic main*, which is shown at B, *fig.* 507. It consists of a cylinder running the entire length of the retort house, and fixed at a sufficient height above the mouths of the retorts to protect it from the flame issuing from the latter during the times of charging and drawing. The diameter varies from 12 to 18 inches, and the recurved extremities of the standpipes (*the dippipes*) C C C C, pass through it by gas-tight joints, and dip, to the extent of 3 or 4 inches, into the condensed liquids contained in the hydraulic main. The use of this portion of the apparatus is to cut off the communication in the reverse direction between the gas beyond the standpipes and the retorts, so as to prevent the former rushing back down the standpipe during the time that the lid of the retort is removed. Being maintained half full of tar it effectually seals the lower ends of the dip-pipes, and prevents any return of gas towards the retorts. The condensed products, consisting chiefly of tar, make their exit from the hydraulic main by the pipe D, which leads them to the tar well. From the hydraulic main the gas passes to the *condenser*, the office of which, as its name implies, is to effect the condensation of all those vapours which could not be retained by the gas at the ordinary atmospheric temperature. The condenser has received a variety of forms, but the one which appears to unite in the highest degree simplicity and efficiency, is the invention of Mr. Wright, of the Western and Great Central Gas Companies. Its construction is shown in *fig.* 508. A A A A, are 5 double

508

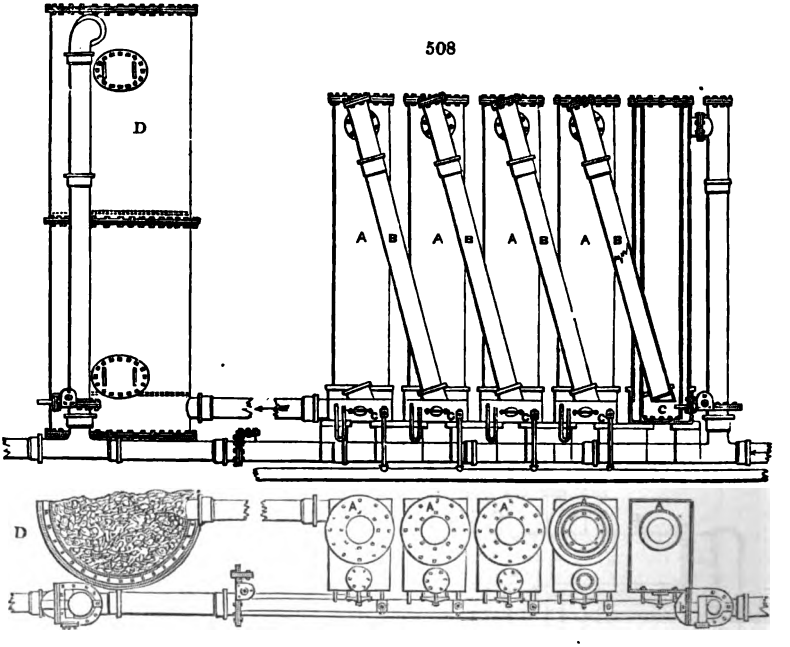

concentric cast-iron cylinders, through which the gas is made to circulate in succession by means of the tiepipes B B B B, whilst the inner cylinders being open above and below, a current of air, set in motion by their heated walls, rushes through them, thus securing both an internal and external refrigeratory action. It will be also seen by a reference to the figure that the heated gas enters these cylinders at the top, taking an opposite direction to that pursued by the external and internal currents of air, and thus securing the most perfect refrigeration, by bringing the gas constantly in proximity to air of increasing coldness. Each cylinder is furnished at bottom with a tar receptacle, C, for the collection of the condensed products, which are carried to the tar well by a pipe not shown in the figure. The details of construction are sufficiently seen from the drawing, and require no further description.

In some country works the condenser represented at D, *fig.* 495 (p. 747) is used. It consists of a square chest, *g*, made of wrought-iron plates open at top, but having

Digitized by Google

its bottom pierced with a row of holes, to receive a series of tubes. To these holes the upright four-inch tubes *h h* are secured by flanges and screws, and they are connected in pairs at top by the curved or saddle tubes. The said bottom forms the cover of the chest *t t*, which is divided by vertical iron partitions, into half as many compartments as there are tubes.

These partition plates are left open at bottom, so as to place the liquids of each compartment in communication. Thereby the gas passes up and down the series of tubes, in proceeding from one compartment to another. The condensed liquids descend into the box *t t*, and flow over into the tar cistern, when they rise above the level *t t*. The tar may be drawn off from time to time by the stopcock. Through the tube *k* cold water flows into the condenser chest, and the warm water passes away by a pipe at its upper edge.

The extent of surface which the gas requires for its refrigeration before it is admitted into the washing-lime apparatus, depends upon the temperature of the milk of lime, and the quantity of gas generated in a certain time.

It may be assumed as a determination sufficiently exact, that 10 square feet of surface of the condenser can cool a cubic foot of gas per minute to the temperature of the cooling water. For example, suppose a furnace or arch, with 5 retorts of 150 pounds of coale ach, to produce in 5 hours 3000 cubic feet of gas, or 10 cubic feet per minute, there would be required, for the cooling surface of the condenser, 100 square feet = 10 × 10. Suppose 100,000 cubic feet of gas to be produced in 24 hours, for which 8 or 9 such arches must be employed, the condensing surface must contain from 800 to 900 square feet.

After the action of the condenser, the gas still retains, chiefly in mechanical suspension, a certain quantity of tarry matter, besides a slight percentage of ammonia. To free it from these, it is passed through a *scrubber* D (*fig.* 508), which consists of a tall cylinder filled with bricks, paving stones, or coke, and having an arrangement by which a stream of water can be admitted at top and removed at bottom. The chief use of the water is to remove ammonia from the gas, but as it also dissolves some of the luminiferous hydrocarbons its use is objected to by Mr. Wright, and dry scrubbers are now used at the Western Gas Works. It is also considered by the same gentleman, that the detention of a certain percentage of ammonia by the gas, is rather an advantage than otherwise, as it serves in part to neutralise the sulphurous acid which is inevitably produced by the combustion even of the best gas. It must, however, be borne in mind, that the presence of ammonia in gas gives rise to the formation of nitric acid during its combustion.

The exhauster. — The passage of the gas through the liquid of the hydraulic main, and the other portions of apparatus between the retorts and gasholder, causes a very considerable amount of pressure to be thrown back upon the retorts, an effect which is productive of mischief in two ways; in the first place, if there be any fissure or flaw in the retorts, or leakage in the joints, the escape and consequent loss of gas is greatly augmented; and in the second place, it has been ascertained by Mr. Grafton of Cambridge, that pressure in the retorts causes the decomposition of the illuminating hydrocarbons with greatly increased rapidity. It is, therefore, very desirable to remove nearly the whole of this pressure by mechanical means, and this is now done in all well arranged works, by the use of an apparatus termed an exhauster. Several forms of exhausters are in use, but it will be necessary only to describe that of Mr. J. T. Beale, which has been found by experience to be very effective and economical. It is shown in section in *fig.* 509. The axle A is reduced at each end, and passes into two cylindrical boxes bored to a larger diameter than the axle at those parts; and in the annular space between the axle and the box antifriction rollers are introduced, their diameter being equal to the width of the annular space; the box at one end is fitted with a stuffing box, through which the axle passes for the application of the driving power. Upon motion being given to the axle, the sliding pistons B B are carried with it. These sliding pistons are furnished at their ends with cylindrical pins which project and fit into cylindrical holes bored in the guide blocks C C, which fit into annular recesses D in the end plates, and keep the slides in contact with the cylinder. The slides are fitted with metallic packing E, to allow of wear. The axle continuing to revolve, as one slide reaches the outlet and ceases to exhaust, the other comes into action, and the exhaustion is unceasing. Thus the pressure upon the retorts (which is indicated by a gauge) is reduced to about half an inch of water.

III. Apparatus used in the Purification of Coal Gas.

The purifier. — One form of this apparatus, represented at E, *fig.* 495 (p. 747), is composed of a cylindrical iron vessel, with an airtight cover screwed upon it, through which the cylinder *n* is also fixed airtight. The bottom of this cylinder spreads out like the brim of a hat, forming a horizontal circular partition, which is pierced with holes. Through a stuffing box, in the cover of this interior cylinder, the vertical axis of the

Digitized by Google

agitator passes, which is turned by wheel and pinion work, in order to stir up the lime from the bottom of the water in the purifier. The vessel *o*, serves for introducing fresh milk of lime, as also for letting it off by a stopcock when it has become too foul for further use.

509

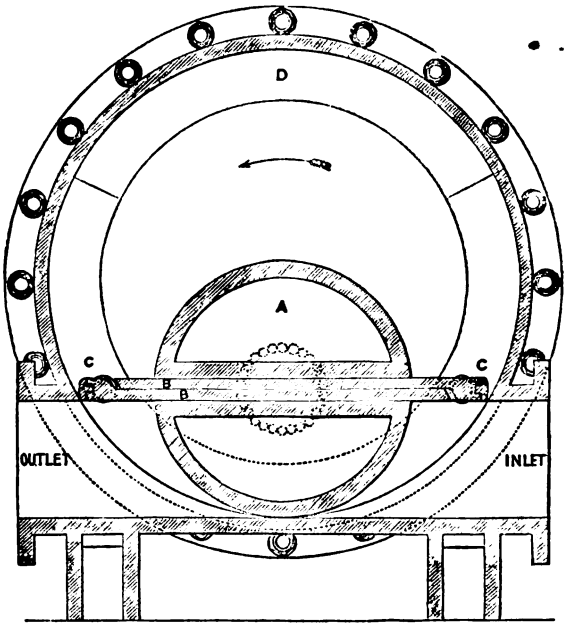

The quantity of lime should be proportioned to the quantity of sulphuretted hydrogen and carbonic acid contained in the gas. Supposing that in good coal gas there is 5 per cent. of these gases, about one pound and a half of lime will be requisite for every hundred cubic feet of coal gas generated, which amounts to nearly one-sixteenth of the weight of coal subjected to decomposition. This quantity of lime mixed with the proper quantity of water will form about a cubic foot of milk of lime. Consequently, the capacity of the purifier, that is, of the interior space filled with liquid, may be taken at four-sevenths of a cubic foot for every hundred cubic feet of gas passing through it in one operation; or for 175 cubic feet of gas, one cubic foot of liquor. After every operation, that is, after every five or six hours, the purifier must be filled afresh. Suppose that in the course of one operation 20,000 cubic feet of gas pass through the machine, this should be able to contain $\frac{20{,}000}{175} = 114$ cubic feet of milk of lime; whence its diameter should be 7 feet, and the height of the liquid 3 feet. If the capacity of the vessel be less, the lime milk must be more frequently changed.

In some gas works the purifier has the following construction, whereby an uninterrupted influx and efflux of milk of lime takes place. Three single purifiers are so connected together that the second vessel stands higher than the first, and the third than the second; so that the discharge tube of the superior vessel, placed somewhat below its cover, enters into the upper part of the next lower vessel; consequently, should the milk of lime in the third and uppermost vessel rise above its ordinary level, it will flow over into the second, and thence in the same way into the first; from which it is let off by the eduction pipe. A tube introduces the gas from the condenser into the first vessel; another tube does the same thing for the second vessel, &c.; and the tube of the third vessel conducts the gas into the gasometer. Into the third vessel, milk of lime is constantly made to flow from a cistern upon a higher level. By this arrangement, the gas passing through the several vessels in proportion as it is purified, comes progressively into contact with purer milk of lime, whereby its purification becomes more complete. The agitator *c*, provided with two stirring paddles, is kept in continual rotation. The pressure which the gas has here to overcome is naturally three times as great as with a single purifier of like depth.

Digitized by Google

Fig. 496 (p. 747) is a simple form of purifier, which has been found to answer well in practice. Through the cover of the vessel A B, the wide cylinder *e d* is inserted, having its lower end pierced with numerous holes. Concentric with that cylinder is the narrower one *s z*, bound above with the flange *a b*, but open at top and bottom. The under edge *g h* of this cylinder descends a few inches below the end *c d* of the outer one. About the middle of the vessel the perforated shelf *m n* is placed. The shaft of the agitator *l*, passes through a stuffing box upon the top of the vessel. The gas pipe *g*, proceeding from the condenser, enters through the flange *a b* in the outer cylinder, while the gas-pipe *h* goes from the cover to the gasholder. A stopcock upon the side, whose orifice of discharge is somewhat higher than the under edge of the outer cylinder, serves to draw off the milk of lime. As the gas enters through the pipe *g* into the space between the two cylinders, it displaces the liquor till it arrives at the holes in the under edge of the outer cylinder, through which, as well as under the edge, it flows, and then passes up through the apertures of the shelf *m n* into the milk of lime chamber; the level of which is shown by the dotted line. The stirrer, *l*, should be turned by wheel work, though it is here shown as put in motion by a winch handle.

In order to judge of the degree of purity of the gas after its transmission through the lime machine, a slender siphon tube provided with a stopcock may have the one end inserted in its cover, and the other dipped into a vessel containing a solution of acetate of lead. Whenever the solution has been rendered turbid by the precipitation of black sulphuret of lead, it should be renewed. The saturated and fetid milk of lime is evaporated in oblong cast-iron troughs placed in the ashpit of the furnaces, and the dried lime is partly employed for luting the apparatus, and partly disposed of for a mortar or manure.

Fig. 510 shows elevations and sections of dry lime purifiers, which may also be used for other forms of dry purification. A is the longitudinal elevation; B ditto section; C transverse elevations; D ditto section.

510

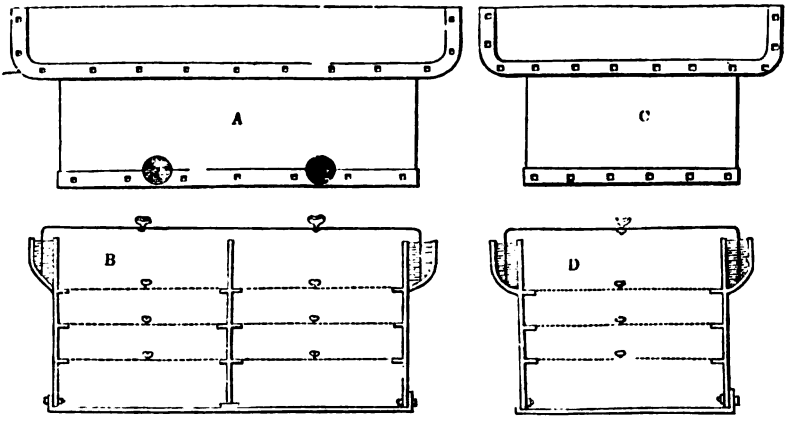

Figs. 511 and 512 represent another form of dry purifier, combined with a washer or scrubber, lately patented by Mr. Lees of Manchester. *Fig.* 511 is an elevation, partly in section of this apparatus, and *fig.* 512 is another elevation, also partly in section, of the same. *a* is a hopper, into which the dry lime is fed; *b* is a damper, or sliding door, by which the supply of lime can be regulated; *c* is a sheet metal tube, containing the worm or screw, *d* the axis of which is supported at one end by the stuffing box *e*, and at the other end by the bearing *f*. A slow revolving motion is given to the worm *d* from the driving shaft *g*, by means of the bevel wheels h, upright shaft *i*, worm *j*, and worm wheel *k*, fixed on the axis of the worm.

The lime in the hopper *a*, is kept in motion by the screw *n*, which is turned slowly round by the worm *g*, the worm wheel *o* and bevel wheels *p*, one of which is fixed on the screw *n*. The tube *c* is open at *c'*, to admit the dry lime from the hopper *a*, and the worm or screw *d*, is furnished with cross pieces *d'* to agitate the lime which is gradually moved from the hopper to the other end of the tube *c*, by the revolving of the worm. Below the tube *c* is another tube *l*; *y* is a syphon, by which the washing fluid is supplied and conducted to the chamber *s*, which then flows down the tube *l* to the chamber *r*, keeping the level indicated by *j b*. *z* are two paddles, fixed upon the

Digitized by Google

circular perforated plates, which are set to an angle, and secured to the shaft *m'*, and are revolved speedily by the strap and pulleys *x*. These agitators serve to increase

511

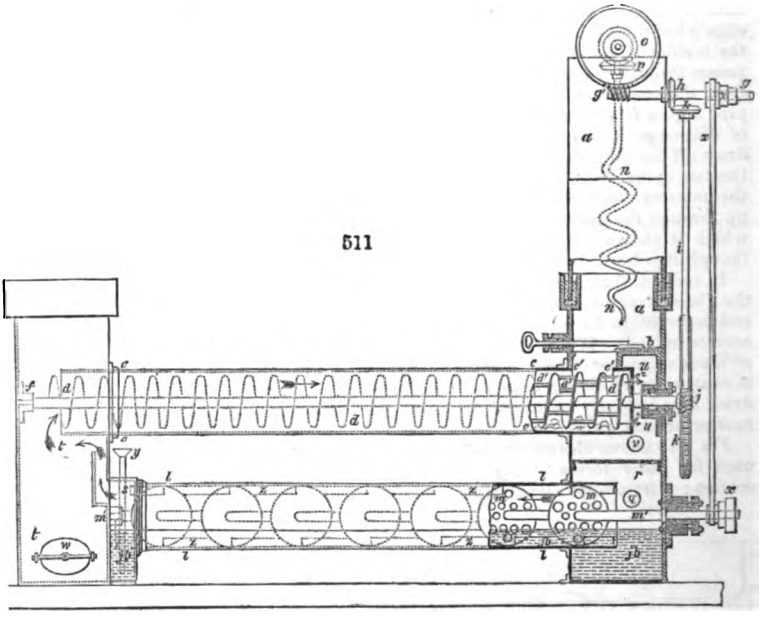

the action of the washing fluid contained in the tube *l*, by which the gas is washed previous to passing through the dry lime purifier.

The mode of operation is as follows:— the gas to be purified is admitted through the pipe *q*, to the chamber *r*, from whence it passes along the tube *l*, as shown by the arrows, to the chamber *s*; it then rises into the chamber *t* and enters the tube *c*, along which it passes in the direction shown by the arrows, whence it may be conveyed, through the pipe *v*, to the gasometer.

512

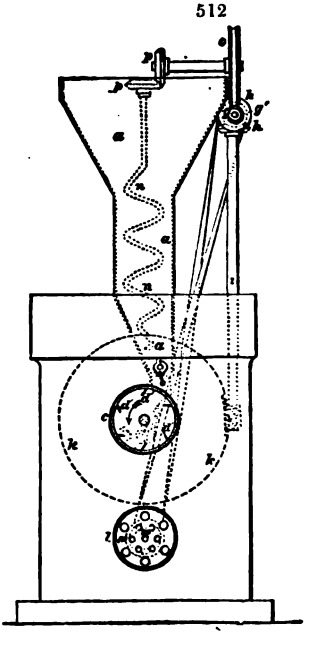

It will be apparent, as the gas passes along the tube *l*, containing the agitators *m* which are caused to revolve speedily by the motion given by the straps and speed pulleys *x*, that the washing fluid, which is passing regularly through the siphon *y*, and running into the chamber *s*, and along the tube *l*, into the chamber *r*, keeping the level as shown by *j b*, is caused to be revolved into a centrifugal motion round the tube *l*, by the two paddles *z*, placed upon the circular perforated plates, secured upon the shaft *m*, which are set to an angle, thereby causing a counter-motion from left to right of the tube *l*, and causing the washing fluid to be wrought into a complete spray amongst the gas, whereby the heavier parts of the impurities are carried away more effectually than by any other washers in use.

The gas then enters the chamber *t* through the tube *c*, passes along the coils or threads of the worm or screw *d*, and as the cross pieces *d'* are set to an angle, as shown in *fig.* 512, the lime is raised from the lower to the upper part of the tube *c*, and then drops down to the gas that is making its way towards the openings c^2; consequently, the lime and the gas become most intimately mixed, whereby the lime is made to

Digitized by Google

absorb a much greater proportion of the impurities contained in the gas than is effected by the dry lime purifiers usually employed, in which the lime is supported on stationary trays. The lime dropping into the tube *c* from the hopper *a*, is worked gradually towards the chamber *i*, into which it drops. The speed of the screw or worm *d*, the number of threads upon it, the length and diameter thereof must be made to suit the quantity of gas to be purified per hour. The lime which drops into the chamber *i*, may be removed therefrom through the manhole *w*. Mr. Lees states that a considerable saving is effected in the lime, owing to each particle or atom being kept in motion, and falling repeatedly through the gas in its passage from one end of the tube to the other, and that there is also a great saving in labour.

Another form of wet purifier, which might also be advantageously used as a scrubber, or as a naphthaliser, has recently been invented by M. Colladon of Geneva, and is now in use in the gas manufactory of that city. This apparatus, as shown in vertical section in *fig.* 513, consists of a section of a very obtuse cone A′ the angle of

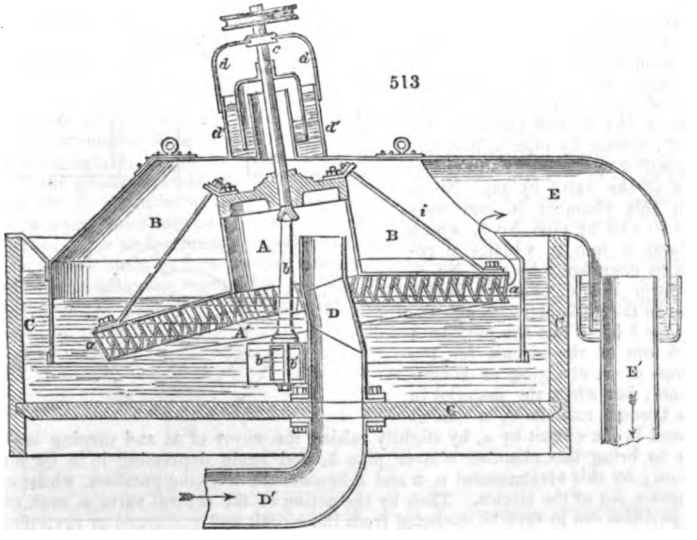

inclination of which is 164°. Its upper and smaller end is joined to a metal cylinder A, placed on the same axis as A′, and about its own diameter in height. At top it is closed by a cast-iron plate K, through which the axle C passes: the latter communicates a rotary motion to the cylinder and cone A and A′. It is inclined 8° from the perpendicular, and rests upon the steel point of the centre pin *b′*, whilst at top it carries a pulley by which a circular motion is communicated to it. *a a* are a series of metal discs which stand vertically to the inner surface of the cone A′, with spaces of about one inch between them. The discs are arranged concentrically, and have spaces corresponding to the quantity of gas which has to pass through them. They are from 5 to 7 inches long. As the axle *c* and cylinder A are not vertical, but somewhat inclined, one side of the cone A′ will, during the revolution, be in a nearly horizontal position, whilst the opposite side will be immersed in the liquid to the extent of about 16°. The whole of this mechanism is enclosed in a sheet-iron lid B. The centre pin *b* is attached by a cross bar to the lower edge of B, whilst the axle *c* is supported by *d*, which is also attached to B. *d′ d′* is a water joint permitting of the free motion of *c*. The lid B thus contains the whole of the washing apparatus, and it is held in its proper position in the trough C by lateral attachments. D is the inlet pipe opening into the cylinder A, from which it has to make its way through the discs *a a* to the outlet E. This apparatus gives no sensible pressure, and requires a very small motive power.

Fig. 514 represents an arrangement of four of the dry purifiers shown in *fig.* 510, worked by a central valve, as used at the present time in most large gasworks; it is the invention of Mr. Malam, and is described in Mr. Peckston's treatise. A, B, C, D, are the four purifiers connected with the central valve E in such a way as to permit of three of them being at work whilst the fourth is emptied and recharged. The outer case of the central valve E, is a cylinder of cast- or wrought-iron, 5 to 6 feet in diameter and 3 to 4 feet deep. Its floor receives the open ends of 10 pipes conducting the gas from the condenser or exhauster to the different purifiers, and then to the gasholders; the

Digitized by Google

ends of these pipes project upwards to the height of 14 inches, and the vessel E is filled with water to the height of 12 inches, thus leaving the orifice of the pipes 2 inches above the water level. This cylinder has a cover which consists of a smaller cylinder, open below and closed above, fitting into E, so as to form a water lute. Its interior is divided into 5 chambers, as shown in *fig.* 515, and when the cover is so far lowered into E as to immerse the edges of these chambers into the water, they each connect together a pair of pipes as shown in *fig.* 514, at E, which exhibits a horizontal section through these chambers. The chambered cover being placed in the position shown in *fig.* 514, the gas takes the following course: it enters the chamber *a'* by the pipe *a a*, passes through the pipe marked 1 into the bottom of the purifier C, and after traversing the layers of purifying material in C, it returns to chamber *e* of the central valve by the pipe 2; thence by pipe 3, it enters the purifier D, and returns to chamber *d* of the valve by pipe No. 4. From this chamber it can only make its exit by pipe No. 5, which conducts it into B, whence it returns to chamber *b* by pipe No. 6, and from this chamber it finally passes to the gasholder through the exit pipe *b b*. Thus the purifier A is left out of the circuit for the purpose of re-charging or revivification; but when the material in C has become exhausted, it can be replaced in the circuit by A, by slightly raising the cover of E, and turning it round so as to bring the chamber *a'* over pipe 3, and again depressing it to its former position; by this arrangement D, B and A become the working purifiers, whilst C will be thrown out of the circuit. Thus by the action of the central valve E, each of the four purifiers can in turn be excluded from the circuit and recharged or revivified.

514

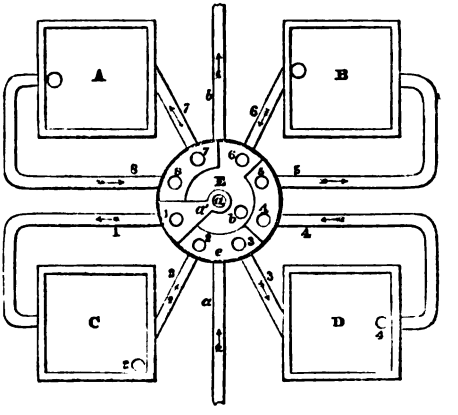

515

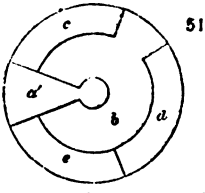

IV. Apparatus for the Storage of Coal-Gas.

The gasholder serves as a magazine for receiving the gas when it is purified, and keeping it in store for use. It consists of two essential parts; 1, of an under cistern, open at the top and filled with water; and 2, of the upper floating cylinder or chest, which is a similar cistern, inverted, and of somewhat smaller dimensions (see F, *fig.* 495, p. 747). The best form of this vessel is the round or cylindrical; both because under equal capacity it requires least surface of metal, and it is least liable to be warped by it own weight or accidents. Since a cylindrical body has the greatest capacity with a given surface when its height is equal to its semi diameter, its dimensions ought to be such that when elevated to the highest point in the water, the height may be equal to the radius of the base. For example, let the capacity of the gasholder in cubic feet be k, the semi-diameter of its base be x, the height out of the water be h; h is $= x = \sqrt[3]{\frac{k}{3 \cdot 14}}$. This height may be increased by one or two feet, according to its magnitude, to prevent the chance of any gas escaping beneath its under edge, when it is raised to its highest elevation in the water.

The size of the gasholder should be proportional to the quantity of gas to be consumed in a certain time. If 120,000 cubic feet be required, for instance, in 10 hours for street illumination, and if the gas retorts be charged 4 times in 24 hours, 30,000 feet of gas will be generated in 6 hours. Hence the gasholder should have a capacity of at least 70,000 cubic feet, supposing the remaining 50,000 cubic feet to be produced during the period of consumption. If the gasholder has a smaller capacity, it must be supplied from a greater number of retorts during the lighting period, which is not advantageous, as the first heating of the supernumerary retorts is wasteful of fuel.

Digitized by Google

The water cistern is usually constructed in this country with cast-iron plates bolted together, and made tight with rust cement.

In cases where the weight of water required to fill such a cistern might be inconvenient to sustain, it may be made in the form represented in *fig.* 517; which, however, will cost nearly twice as much. Parallel with the side of the cistern, a second cylinder C, of the same shape but somewhat smaller, is fixed in an inverted position to the bottom of the first, so as to leave an annular space B B between them, which is filled with water, and in which the floating gasholder A plays up and down. The water must stand above the cover of the inverted cylinder. *a* and *b* are the pipes for leading the gas in and out. Through an opening in the masonry upon which the apparatus rests, the space C may be entered, in order to make any requisite repairs.

The water cistern may also be sunk in the ground, and the sides made tight with hydraulic mortar, as is shown in *fig.* 516, and to make it answer with less water a concentric cylindrical mass of masonry may be built at a distance of 2 or 3 inches within it.

Every large gasholder must be strengthened interiorly with cross iron rods, to stiffen both its top and bottom. The top is supported by rods stretching obliquely down to the sides, and to the under edge an iron ring is attached, consisting of curved cast-iron bars bolted together; with which the oblique rods are connected by perpendicular ones. Other vertical rods stretch directly from the top to the bottom edge. Upon the periphery of the top, at the end of the rods, several rings are made fast, to which the gasholder is suspended, by means of a common chain which runs over a pulley at the centre. Upon the other end of the chain there is a counterpoise, which takes off the greater part of the weight of the gasholder, leaving only so much as is requisite for the expulsion of the gas. The inner and outer surfaces of the gasholder should be a few times rubbed over with hot tar, at a few days' interval between each application. The pulley must be made fast to a strong frame.

If the water cistern be formed with masonry, the suspension of the gasholder may be made in the following way:—A A, *fig.* 516, is a hollow cylinder of cast-iron, standing up through the middle of the gasholder, and which is provided at either end with

516

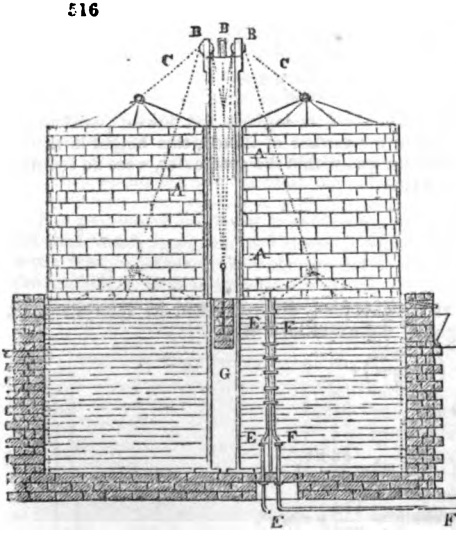

517

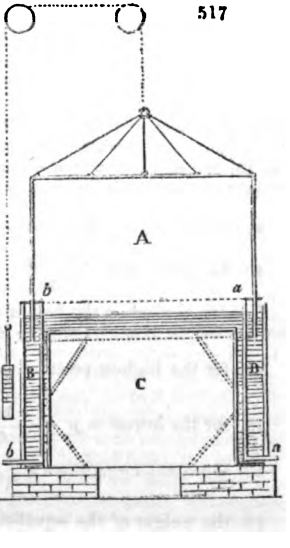

another small hollow cylinder G, open at both ends, and passing through the top, with its axis placed in the axis of the gasholder. In the hollow cylinder G, the counterweight moves up and down, with its chain passing over the three pulleys, B, B, B, as shown in *fig.* 517; E F are the gas pipes made fast to a vertical iron rod. Should the gasholder be made to work without a counterweight, as we shall presently see, the central cylinder A A serves as a vertical guide.

In proportion as the gasholder sinks in the water of the cistern, it loses so much of its weight as is equal to the weight of the water displaced by the sides of the sinking vessel, so that the gasholder, when entirely immersed, exercises the least pressure

Digitized by Google

upon the gas, and when entirely out of the water, it exercises the greatest pressure. In order to counteract this inequality of pressure, which, where no governor is used, would occasion an unequal velocity in the efflux of the gas, and of course an unequal intensity of light in its flame, the weight of the chain upon which the gasholder hangs is so adjusted as to be equal, throughout the length of its motion, to one-half of the weight which the gasholder loses by immersion. In this case, the weight which it loses by sinking into the water is replaced by the portion of the chain which, passing the pulley and hanging over, balances so much of the chain upon the side of the counterweight; and the weight which it gains by rising out of the water is counterpoised by the links of the chain which, passing over the pulley, add to the amount of the counterweight. The pressure which the gasholder exercises upon the gas, or that with which it forces it through the first main pipe, is usually so regulated as to sustain a column of from one to two inches of water, so that the water will stand in the cistern from one to two inches higher within than without the gasholder. The following computation will place these particulars in a clear light:—

Let the semi-diameter of the gasholder, equal to the vertical extent of its motion into and out of the water, $= x$; let the weight of a foot square of the side of the gasholder, including that of the strengthening bars and ring, which remain plunged under the water, be $= p$; then

1. the weight of the gasholder in its highest position $= 3 p \pi x^2$;
2. the weight of the sides of the gasholder which play in the water $= 2 p x^2$;
3. the cubical contents of the immersed portion of the gasholder $= \frac{2 p \pi x^2}{400}$;
4. its loss of weight in water $= \frac{112}{400} p \pi x^2$;
5. the weight of the gasholder in its lowest position $=$
$$p \pi x^2 \left(3 - \frac{112}{400}\right) = 2{\cdot}72\, p \pi x^2;$$
6. the weight of n inches height of water $= \frac{56}{12} n \pi x^2$;
7. the amount of the counterweight $= \pi x^2) 3 p - \frac{56 n}{12}\Big)$;
8. the weight of the chain for the length $x = \frac{112}{800} p \pi x$.

If we reduce the weight of the gasholder, in its highest and lowest positions, to the height of a stratum of water equal to the surface of its top, this height is that of the column of water which would press the gas within the gasometer, were no counterweight employed; it consists as follows:—

9. for the highest position $= \frac{3 p}{56}$;
10. for the lowest $= \frac{2{\cdot}72\, p}{50}$;

For the case when the height of the gasholder is different from its semi-diameter, let this height $= m x$; then the height of the water level is

11. for the highest position $= p \left(\frac{1 + 2 m}{56}\right)$;
12. for the lowest $= p \left(\frac{1 + 1{\cdot}72\, m}{6}\right)$;
13. the counterweight $= \pi x^2 \left(p (1 + 2 m) - \frac{56 n}{12}\right)$;
14. the weight of the equalising chain $= \frac{112}{830} p \pi m x^2$.

For example, let the diameter of the gasholder be 30 feet, the height 15 (the contents in cubic feet will be 10,597), $p = 4$ lbs.; then the counterweight for a height of $1\frac{1}{2}$ inch of water pressure $= 3532$ lbs. the weight of the chain for a length of 15 feet $= 395$ lbs. Were no counterweight employed, so that the gasholder pressed with its whole weight upon the gas, then the height of the equivalent column of water in its highest position $= 2{\cdot}56$ inches; and in its lowest, 2·33. The counterweight may hence be lessened at pleasure, if the height of the pressing water column, n, be increased. The weight of the equalising or compensating portion of the chain remains the same. When $n = 2$ inches, for instance, the counterweight $= 1886$ lbs.

Digitized by Google

The velocity with which the gas passes along the mains for supplying the various jets of light may be further regulated by opening the main cock or slide valve in a greater or less degree.

Gasholders whose height is greater than their semi-diameter are not only more costly in the construction, but require heavier counterweights and equilibration chains.

The above estimate is made on the supposition of the gas in the gasholder being of the same specific gravity as the atmospherical air, which would be nearly true with regard to oil-gas under the ordinary pressure. But coal-gas, whose specific gravity may be taken on an average at about 0·5, exercises a buoyancy upon the top of the gasholder, which of course diminishes its absolute weight. Supposing the cubic foot of gas to be = 0·0364 lbs., the buoyancy will be = $0{\cdot}0364\,\pi\,x^2$ lbs., a quantity which deserves to be taken into account for large gasometers. Hence,

15. the weight of the gasholder in its highest position = $3\,p\,\pi\,x^2 - 0{\cdot}1143\,x^3$;

16. the counterweight = $\pi\,x^2\left(3p - \frac{56\,n}{12}\right) - 0{\cdot}1143\,x^3$;

17. the weight of the chain for the length x, = $\frac{112}{800}\,p\,\pi\,x^2\,\frac{0{\cdot}1143\,x^3}{2}$;

18. the height of the water pressure from the highest position, without the counterweight, = $\frac{3\,p\,\pi - 0{\cdot}1143\,x}{56\,\pi}$;

19. the same for the lowest position = $\frac{2{\cdot}72\,p}{56}$ in feet

The preceding values of p and x, are,

(16) = 3147; (17) = 304; (18) = 2·44 inches; (19) = 2·33 inches.

The water columns in the highest and lowest situations of the gasholder here differ about 0·1 of an inch, and this difference becomes still less when p has a smaller value, for example, 3 lbs., or when the diameter of the gasholder is still greater.

It would thus appear that for coal gasholders, in which the height of the gasholder does not exceed its semi-diameter, and especially when it has a considerable size, neither a compensation chain nor a counterweight is necessary. The only thing requisite, is to preserve the vertical motion of the gasholder by a sufficient number of guide rods or pillars, placed either within the water cistern or round about it. Should the pressure of the gas in the pipe proceeding from the gasholder be less than in the gasholder itself, this may be regulated by the main valve, or by water valves of various kinds. Or, as is now usually done, a *governor* may be introduced between the great gasholder and the main pipe of distribution. With a diameter of 61 feet in the gasholder, the pressure in the highest and lowest positions is the same.

The gasholders employed in storing up gas until required for use, occupy, upon the old plan, much space, and are attended with considerable expense in erecting. The water tank, whether sunk in the ground or raised, must be of equal dimensions with the gasholder, both in breadth and depth. The improved construction which we are about to describe, affords a means of reducing the depth of the tank, dispensing with the bridge of suspension, and of increasing at pleasure the capacity of the gasholder, upon a given base, thus rendering a small apparatus capable, if required, of holding a large quantity of gas, the first cost of which will be considerably less than even a small gasholder constructed upon the ordinary plan.

518

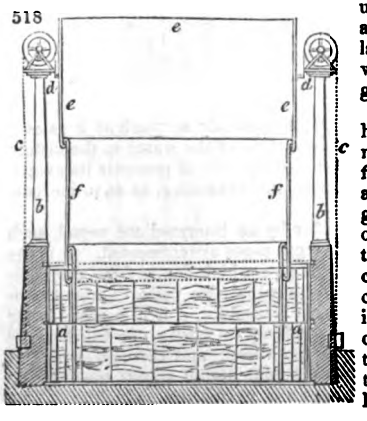

Mr. Tait, of Mile-End Road, the inventor, has, we believe, been for some years connected with gas establishments, and is therefore fully aware of the practical defects or advantages of the different constructions of gasholders now in use. *Fig.* 518 is a section of Mr. Tait's improved contrivance; *a a* is the tank, occupied with water; *b b* two iron columns with pulley wheels on the top, *c c*, chains attached to a ring of iron, *d d*, extending round the gasholder, which chains pass over the pulley wheels, and are loaded at their extremities, for the purpose of balancing the weight of the materials of which the gasholder is composed.

Digitized by Google

The gasholder is formed by two or three cylinders, sliding one within the other, like the tubes of a telescope; *e e e* is the first or outer cylinder, closed at the top, and having the ring of iron, *d*, passing round it, by which the whole is suspended; *f f* is the second cylinder, sliding freely within the first, and there may be a third and fourth within these, if necessary.

When there is no gas in the apparatus, all the cylinders are slidden down, and remain, one within the other, immersed in the tank of water; but when the gas rises, through the water pressing against the top of the gasholder, its buoyancy causes the cylinder *e* to ascend. Round the lower edge of this cylinder, a groove is formed by the turning in of the plate of iron, and, as it rises, the edge takes hold of the top rim of the cylinder *f*, which is overlapped for that purpose. The groove at the bottom of the cylinder fills itself with water as it ascends, and, by the rim of the second cylinder falling into it, an airtight hydraulic joint is produced.

Thus, several cylinders may be adapted to act in a small tank of water, by sliding one within the other, with lapped edges forming hydraulic joints, and, by supporting the apparatus in the way shown, the centre of gravity will always be below the points of suspension. A gasholder may be made upon this plan of any diameter, as there will be no need of frame-work or a bridge to support it; and the increasing weight of the apparatus, as the cylinders are raised one after the other, may be counterpoised by loading the ends of the chain *c c*.

Fig. 519 is an elevation of a double or telescopic gasholder of a modern and approved form, with part of a tank.

519

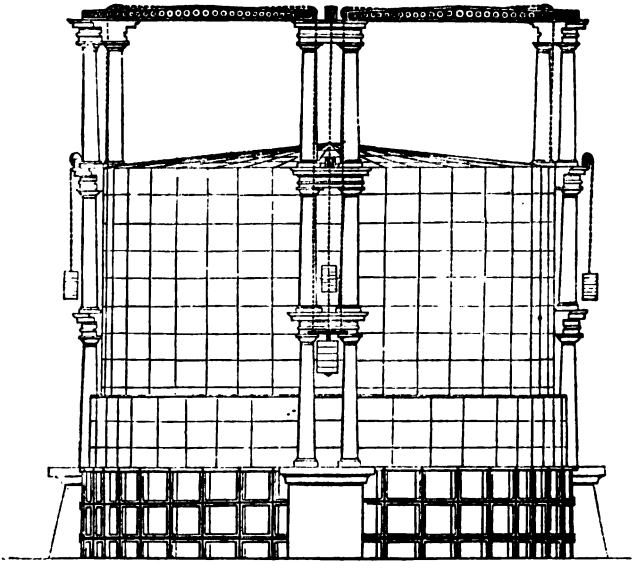

The water in the gasholder need not be renewed; but merely so much of it as evaporates or leaks out is to be replaced. Indeed the surface of the water in the cistern gets covered with a stratum of coal oil, a few inches deep, which prevents its evaporation, and allows the gas to be saturated with this volatile substance, so as to increase its illuminating power.

The gasholder may be separated from the purifier by an intermediate vessel, such as is represented by *fig.* 520, with which the two gas pipes are connected. A is the cylindrical vessel of cast-iron, *a*, the end of the gas pipe which comes from the purifier, immersed a few inches deep into the liquid with which the vessel is about two-thirds filled; *b* is the gaspipe which leads into the gasholder, *c* is a perpendicular tube, placed over the bottom of the vessel, and reaching to within one-third of the top, through which the liquid is introduced into the vessel, and through which it escapes when it overflows the level *d*. In this tube the liquid stands towards the inner level higher, in proportion to the pressure of the gas in the gasholder. The

Digitized by Google

fluid which is condensed in the gaspipe, *b*, and in its prolongation from the gasholder, runs off into the vessel A; and therefore the latter must be laid so low that the said tube may have the requisite declivity. A straight stopcock may also be attached to the side over the bottom, to draw off any sediment.

520

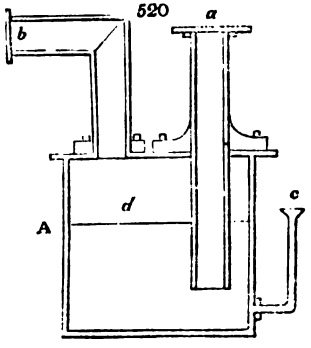

The governor. — Although the gasholder is, to a certain extent, a regulator of pressure, yet it is difficult, by its action alone, to maintain a pressure so steady and uniform as that required for the supply of gas consumers. It would be difficult, if not impossible, to alter the pressure upon the mains frequently during a single night, as is now usually done in towns with a large number of street lamps, without the intervention of an apparatus termed a *governor*. The governor, which occupies a position between the gasholder and supply mains, is a miniature gasholder A, (see *figs.* 521, 522, and 523, which represent Mr. Wright's improved governor,) the interior of which, however, is nearly filled by the concentric inlet and outlet pipes B and C. Immediately over the mouth of the inlet pipe, and depending from the roof of the inner cylinder, is a parabolic piston D, which hangs within the contracted mouth of the inlet pipe C. The interior cylinder is counterpoised by the lever and weights E E. Now, when the pressure of gas in this small

521

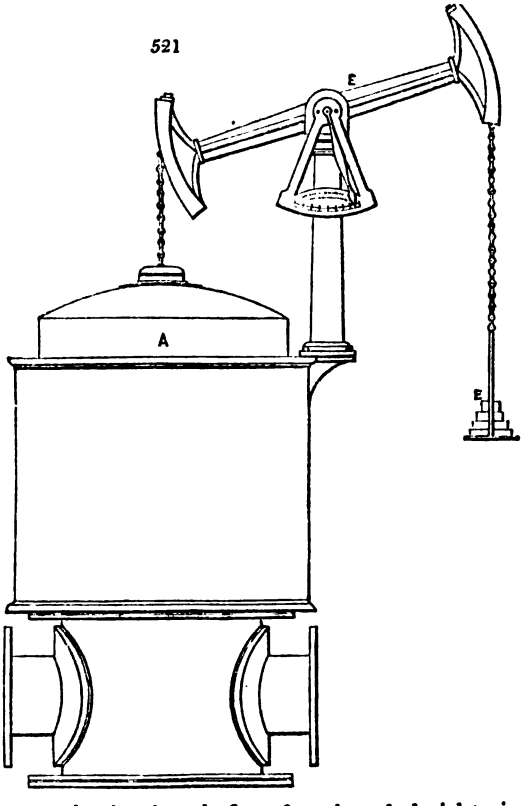

holder increases, — that is, when the flow of gas through the inlet pipe exceeds that escaping from the outlet,—the inner cylinder rises; but in doing so, it carries with it the parabolic piston D, and thus contracts the orifice of the inlet, and consequently diminishes the ingress of gas. In this way, by adjusting the weights attached to the

Digitized by Google

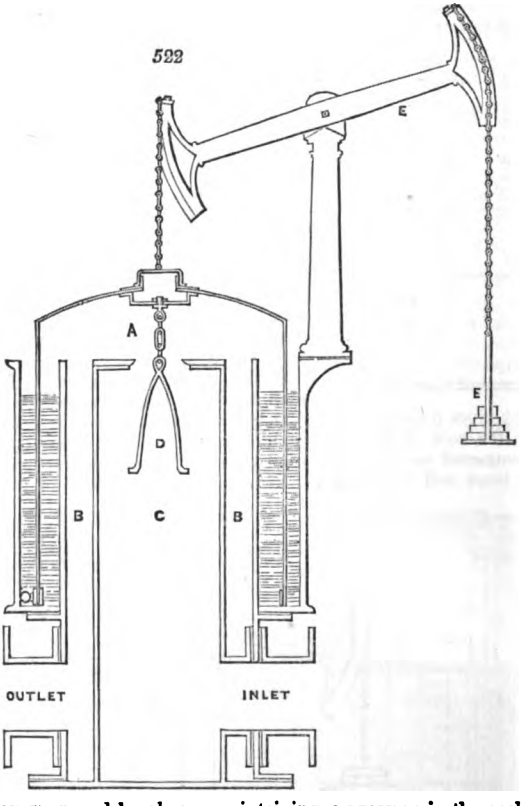

lever of the governor, and by always maintaining a pressure in the gasholder greater than is required in the mains, the gas can be delivered from the governor at any required pressure. In hilly towns, such as Bristol, Bath, Edinburgh, &c., it is neces-

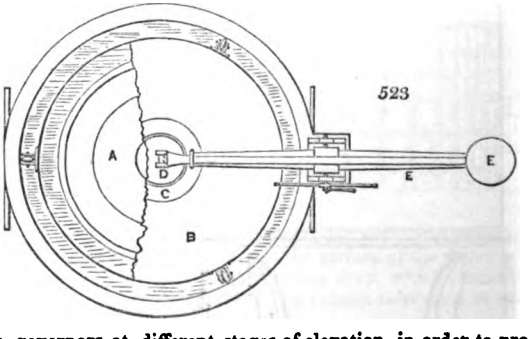

sary to employ governors at different stages of elevation, in order to produce a tolerably uniform pressure in the different districts. The necessity for this will be obvious when it is stated, that a difference of level of 30 feet affects the pressure of the gas in the mains to the extent of $\frac{1}{10}$ths of an inch of water.

The gas mains.—The pressure by which the motion of the gas is maintained in the pipes is regulated by the governor. From the magnitude of this pressure, and the quantity of gas which in a given time, as an hour, must be transmitted through a certain length of pipes, depends the width or the diameter that the latter should have, in order that the motion may not be retarded by the friction which the gas, like

Digitized by Google

all other fluids, experiences in tubes, whereby the gas might be prevented from issuing with the velocity required for the jets of flame. The velocity of the gas in the main pipe increases in the ratio of the square root of the pressing column of water upon the gasholder, and therefore by increasing this pressure the gas may be forced more rapidly along the remoter and smaller ramifications of the pipes. Thus it happens, however, that the gas will be discharged from the orifices near the gasholder, with superfluous velocity. It is therefore advisable to lay the pipes in such a manner, that in every point of their length, the velocity of discharge may be nearly equal. This may be nearly effected as follows: —

From experiment it appears that the magnitude of the friction, or the resistance which the air suffers in moving along the pipes, under a like primary pressure, that is for equal initial velocity, varies with the square root of the length. The volume of gas discharged from the end of a pipe, is directly proportional to the square of its diameter, and inversely as the square root of its length; or, calling the length L, the diameter D, the cubic feet of gas discharged in an hour k; then $k = \frac{D^2}{\sqrt{L}}$. Experience likewise shows, that for a pipe 250 feet long, which transmits in an hour 200 cubic feet of gas, one inch is a sufficient diameter.

Consequently, $200 : k :: \frac{1}{145 \sqrt{250}} : \frac{D^2}{\sqrt{L}}$; and $D = \frac{\sqrt{k \sqrt{L}}}{455{,}000}$

From this formula the following table of proportion is calculated.

Number of cubic feet per hour.	Length of pipe, in feet.	Diameter, in inches.
50	100	0·40
250	200	1·00
500	600	1·97
700	1000	2·65
1000	1000	3·16
1500	1000	3·87
2000	1000	4·47
2000	2000	5·32
2000	4000	6·33
2000	6000	7·00
6000	1000	7·75
6000	2000	9·21
8000	1000	8·95
8000	2000	16·65

These dimensions are applicable to the case where the body of gas is transmitted through pipes without being let off in its way by burners, that is, to the mains which conduct the gas to the places where it is to be used. If the main sends off branches for burners, then for the same length the diameter may be reduced, or for like diameter the length may be greater. For example, if a pipe of 5·32 inches, which transmits 2000 cubic feet through a length of 2000 feet, gives off, in this space, 1000 cubic feet of gas; then the remainder of the pipe, having the same diameter, can continue to transmit the gas through a length of 2450 feet $= \left(\frac{450{,}000}{k}\right)^2$, with undiminished pressure for the purposes of lighting. Inversely the diameter should be progressively reduced in proportion to the number of jets sent off in the length of the pipe.

Suppose, for instance, the gasholder to discharge 2000 cubic feet per hour, and the last point of the jets to be at a distance of 4000 feet. Suppose also that from the gasholder to the first point of lighting, the gas proceeds through 1000 feet of close pipe, the diameter of the pipe will be here 4·47 inches; in the second 1000 feet of length, suppose the pipe to give off, at equal distances, 1000 cubic feet of gas, the diameter in this length (calculated at 1500 cubic feet for 1000 feet long) = 3·87 inches; in the third extent of 1000 feet, 600 cubic feet of gas will be given off, and the diameter (reckoning 700 cubic feet for 1000 feet long) will be 2 65 inches; in the fourth and last space (for 200 cubic feet in 1000 feet long) the pipe has a diameter of only an inch and a half, for which, in practice, a two-inch cast-iron pipe is substituted; this

Digitized by Google

being the smallest used in mains, into which branch pipes can be conveniently inserted.

The same relations hold with regard to branch pipes through which the gas is transmitted into buildings and other places to be illuminated. If such pipes make frequent angular turnings, whereby they retard the motion of the gas, they must be a third or a half larger in diameter. The smallest tubes of distribution are never less than one fourth of an inch in the bore.

Where, from one central gas work, a very great quantity of light is required in particular localities, there ought to be placed near these spots gasholders of distribution, which being filled during the slack hours of the day are ready to supply the burners at night without making any considerable demand upon the original main pipe. Suppose the first main be required to supply 8000 cubic feet in the hour, for an illumination of 8 hours, at the distance of 2000 feet, a pipe 10¾ inches in diameter would be necessary; but if two or three gasholders of distribution, or station gasholders be had recourse to, into which the gas during the course of 24 hours would flow through the same distance continuously from the central gas works, the quantity required per hour from them would be only one third of 8000=2666·6 cubic feet; consequently the diameter for such a pipe is only 6·15 inches.

All the principal as well as branch pipes, whose interior diameter exceeds an inch and a half, are made of cast-iron from 6 to 8 feet long, with elbow pipes cast in them where it is necessary. These pipe lengths are shown in *fig.* 524, having at one end a wide socket *a*, and at the other a nozzle *b*, which fits the former. After inserting the one in the other in their proper horizontal position, a coil of hemp, soaked with tar is driven home at the junction; then a luting of clay is applied at the mouth, within which a ring of lead is cast into the socket, which is driven tight home with a mallet and blunt chisel.

524

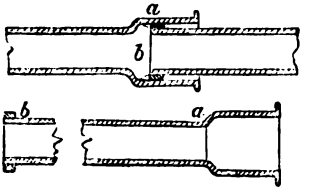

525

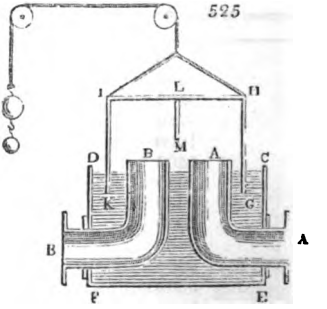

The pipes should be proved by a force pump before being received into the gas works; two or three lengths of them should be joined before laying them down, and they should be placed at least two feet below the surface, to prevent their being affected by changes of temperature, which would loosen the joints. The tubes for internal distribution, when of small size, are made of lead, copper, wrought-iron or tin.

Instead of a stopcock for letting off the gas in regulated quantities from the gasholder, a peculiarly formed water or mercurial valve is usually employed. *Fig.* 525 shows the mode of construction for a water trap or lute, and is, in fact, merely a gasholder in miniature. C D E F is a square cast-iron vessel, in the one side of which a pipe A is placed in communication with the gasholder, and in the other, one with the main B. The movable cover or lid H G I K has a partition, L M, in its middle. If this cover be raised by its counterweight, the gas can pass without impediment from A to B; but if the counterweight be diminished so as to let the partition plate L M sink into the water, the communication of the two pipes is thereby interrupted. In this case the water level stands in the compartment A so much lower than outside of it, and in the compartment B, as is equivalent to the pressure in the gasometer; therefore the pipes A and B must project thus far above the water. In order to keep the water always at the same height, and to prevent it from flowing into the mouths of these pipes, the rim C D of the outer vessel stands somewhat lower than the orifices A B; and hence the vessel may be kept always full of water.

If a quicksilver valve be preferred, it may be constructed as shown in *fig.* 526. A B are the terminations of the two gas pipes, which are made fast in the rectangular iron vessel M. E is an iron vessel of the same form, which is filled with quicksilver up to the level *a*, and which, by means of the screw G, which presses against its

Digitized by Google

bottom, and works in the fixed female screw c c, may be moved up or down, so that the vessel M may be immersed more or less into the quicksilver. The vessel M is furnished with a vertical partition *m*; the passage of the gas from A to B is therefore obstructed when this partition dips into the quicksilver, and from the gradual depression of the vessel E by its screw, the interval between the quicksilver and the lower edge of the partition, through which the gas must enter, may be enlarged at pleasure, whereby the pressure of the gas in B may be regulated to any degree. The transverse section of that interval is equal to the area of the pipe, or rather greater; the breadth of the vessel M from A to B amounts to the double of that space, and its length to the mere diameter of A or B. The greatest height to which the partition *m* can rise out of the quicksilver is also equal to the above diameter, and in this case the line *a* comes to the place of *b*. The vertical movement of the outer vessel E is secured by a rectangular rim or hoop which surrounds it, and is made fast to the upper part of the vessel M, within which guide it moves up and down. Instead of the lever D D, an index with a graduated plate may be employed to turn the screw, and to indicate exactly the magnitude in the opening of the valve.

526

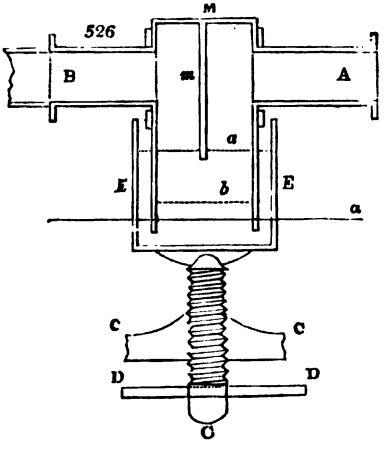

The metres.—In order to measure the quantity of gas which passes through a pipe for lighting a factory, theatre, &c. the gas meter is employed, of whose construction a sufficiently precise idea may be formed from the consideration of *fig.* 527, which shows the instrument in a section perpendicular to its axis.

527

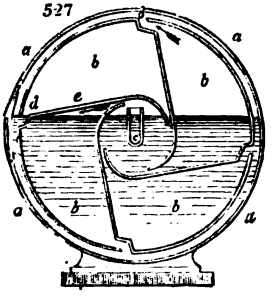

Within the cylindrical case *a*, there is a shorter cylinder *b b*, shut at both ends, and movable round an axis, which is divided into four compartments, that communicate by the openings *d*, with the interval between this cylinder and the outer case. The mode in which this cylinder turns round its axis is as follows: — The end of the tube *c*, which is made fast to the side of the case, and by which the gas enters, carries a pivot or gudgeon, upon which the centre of its prop turns; the other end of the axis runs in the cover, which here forms the side of a superior open vessel, in which, upon the same axis, there is a toothed wheel. The vessel is so far filled with water, that the tube *c* just rises above it, which position is secured by the level of the side vessel. When the gas enters through the tube *c*, by its pressure upon the partition *e* it turns the cylinder from right to left upon its axis, till the exterior opening *d* rises above the water, and the gas expands itself in the exterior space, whence it passes off through a tube at top. At every revolution a certain volume of gas thus goes through the cylinder, proportional to its known capacity. The wheel on the axis works in other toothed wheels, whence, by means of an index upon a graduated disc or dial, placed at top or in front of the gas meter, the number of cubic feet of gas which pass through this apparatus in a given time is registered.

Mr. Thomas Edge, of Great Peter Street, Westminster, has contrived the following meter, of which drawings are annexed.

Fig. 528 is a front view of a three-light meter, the front plate being removed, and some of the parts shown in section.

Fig. 527 is a transverse section of the same.

The gas enters at A into the small chamber B, in the bottom of which is a lever valve (part of Mr. Edge's patent improvement), moving upon its axis and attached by the rod to a metal float C, which in the present drawing is buoyant. The object of this arrangement is to intercept the passage of the gas into the meter, unless a sufficient quantity of water is in it, that being necessary to its proper action; the

Digitized by Google

gas then passes through the inverted siphon or tunnel into the convex cover, whence it passes into the chambers of the drum.

Another of Mr. Edge's improvements consists in the cutting down of this siphon pipe or tunnel to the proper water level, and connecting the bottom of it to a waste water box, into which any surplus water must fall. The importance of this precaution will be seen on investigating the drum, as an excessive height of the water will materially interfere with the measurement, the quantity of gas delivered per revolution

528

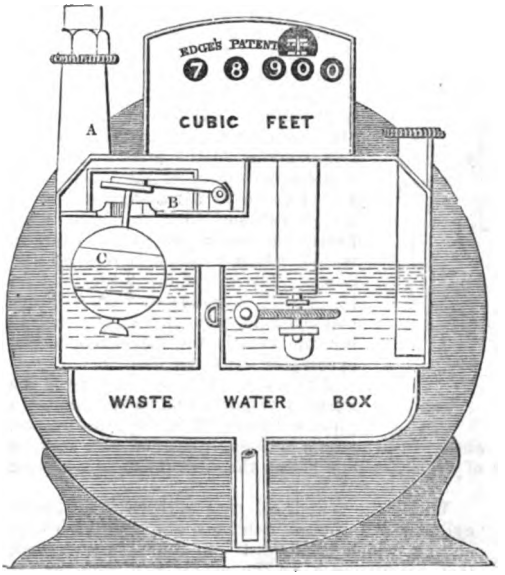

529

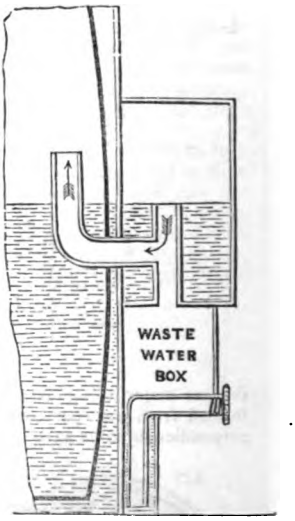

being considerably less. This, in connection with the lever valve and float, confines the variation of the water levels within such narrow limits, that the measurement may be considered perfectly just on all occasions.

The hydraulic, or wet gas meter in ordinary use, when properly constructed, measures with great accuracy, and requires only a very slight pressure of gas to work it; but it readily admits of fraudulent means being employed by the consumer, so as to cause the instrument to under-estimate the amount of gas consumed; whilst, on the other hand, the condensation of moisture within the meter may so far elevate the water level as to cause an over-estimation of the consumption. The water in the hydraulic meter is also liable to freeze in winter, thus completely stopping the supply of gas; at other times, especially when the meter is fixed in a comparatively warm place, the gas, becoming saturated with aqueous vapour, subsequently deposits water during its passage through the cooler portions of the pipes of distribution. The water thus deposited collects in the lower portions of the pipes, breaking the flow of gas into a succession of bubbles, and causing that flickering or dancing of the gas flames which is so frequently a source of annoyance in winter.

These defects and inconveniences are all obviated by the *dry gas meter*, several forms of which have of late years been invented. The first in point of date is Clegg's patent dry gas meter, an instrument displaying great ingenuity, although it has never come into very extensive use. *Figs.* 529*a* and 529*b* show the construction of this meter: the letters of reference are the same in both.

B B, *fig.* 529*a*, represents a cylindrical vessel, about 3¾ inches in diameter and 4 inches deep, being the dimensions of a meter capable of measuring gas for three burners, called a three-light meter. In this vessel are two glass cylinders F F, connected together by the bent tube *d*. The cylinders being perfectly exhausted of air, and half filled with alcohol, are made to vibrate on centres *e*, *e*, and are balanced by the weight *f*. This instrument accurately indicates the excess of heat to which

Digitized by Google

either cylinder may be exposed upon the principle of Leslie's differential thermometer.

529a

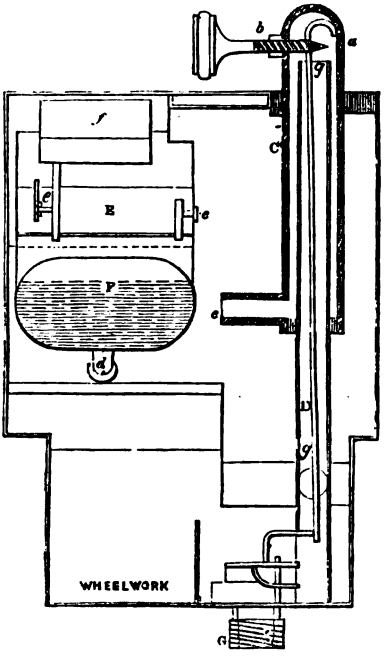

529b

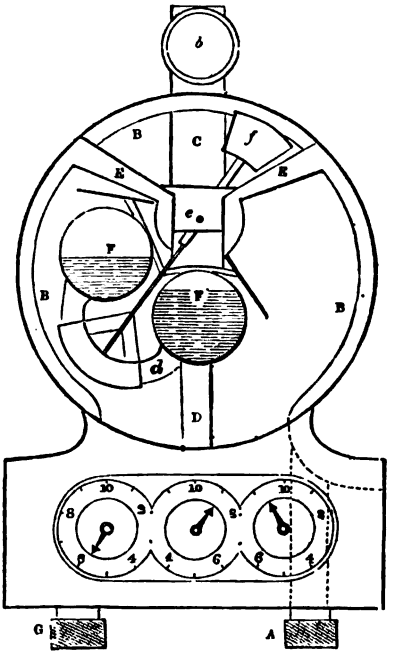

C is a hollow brass box, called the heater, about 4 inches long and ½ an inch broad, projecting out of the meter about 1 inch. At *a* issues a small jet of gas, which, when inflamed, gives motion to the cylinders.

The gas enters the meter by the pipe A, and circulates throughout the double case B. Having passed round the case B, a portion of it enters the top of the box C, by the pipe D, and passes out again at the bottom by the tube *c*, into the meter; the rest of the gas enters the body of the meter through holes in the curved faces of the hoods E E, and, after blowing on the glass cylinders, passes to the burners through the outlet pipe.

To put the meter in action, let the jet *a* be lighted about an hour before the burners are wanted. In most cases this jet will be lighted all day as a useful flame. The hole *a* is so situated on the box C, that whatever be the size of the jet, a fixed temperature is given to the box, that temperature depending on the quantity of flame in contact with the box, and not at all on the length of the jet. The jet being lighted, and the box C thereby heated, the gas which passes through it is raised to the same temperature, and, flowing out at the tube *c*, impinges on the glass cylinder which happens for the time to be the lowest; the heated gas soon raises a vapour in the lower cylinder, the expansion of which drives the liquid into the upper one, until it becomes heavier than the counterpoise *f*, when the cylinders swing on their centre, the higher one descends, and comes in the line of the current of hot gas, and the lower one ascends; the same motion continues as long as the jet *a* burns. The same effect on the cylinder is maintained, however the outward temperature may change, by the cold gas, which, issuing from the curved side of the hood E E, impinges on the upper cylinder, and hastens the condensation of the vapour which it contains.

The cold gas and the heater vary in temperature with the room, and thus counteract each other.

The lighting of the jet *a* is essential to the action of the meters; in order to insure this, the supply of gas to the burners is made to depend on it in the following manner. The pipe G, by which the gas leaves the meter, is covered by a slide valve, which is opened and shut by the action of the pyrometer *g*; the pyrometer is in communication with and receives heat from the jet, and opens the valve when hot, closing it again when cold.

Digitized by Google

The speed at which the cylinders vibrate is an index of the quantity of heat communicated to them, and is in exact proportion to the quantity of gas blowing on them through the pipe *c* and curved side of the hoods E E.

The gas passed through the heater is a fixed proportion of the whole gas passing the meter; therefore the number of vibrations of the cylinders is in proportion to the gas consumed.

A train of wheel-work with dials, similar to that used in the common meter, registers the vibrations.

Simplicity, accuracy, and compactness are the most remarkable features of this instrument, and the absence of all corrosive agents will insure its durability.

The most recently constructed meters on the dry principle are those of Defries, and of Messrs. Croll and Richards. Both of these contrivances consist in causing the gas to fill expansible chambers of definite volume, and the alternate expansion and contraction of these is registered by wheel-work.

Defries' meter has three of these measuring chambers, separated from each other by flexible leather partitions which are partly covered by metallic plates, to protect them from the action of the gas. A A A A, *fig.* 529*e*, represent these metallic plates fixed upon the leather diaphragm B B B B. As the gas enters, it causes the flexible

529*c*

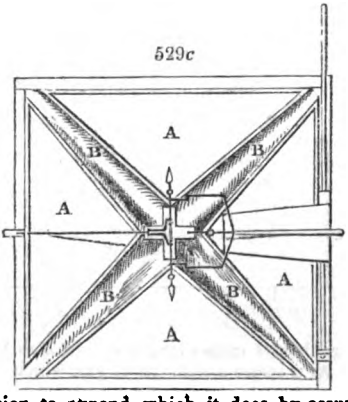

529*d*

partition to expand, which it does by assuming the form of a cone, as seen in *fig.* 529*d*. Three such chambers are attached to each meter, so as to insure a uniform and steady supply of gas, and the motion of the chambers being communicated to clockwork the consumption of gas is registered upon dials in the usual manner.

The dry meter invented by Messrs. Croll and Richards is superior in construction

529*e*

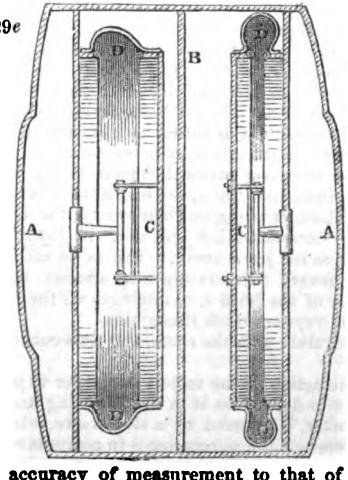

529*f*

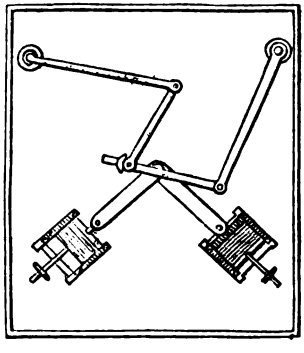

and accuracy of measurement to that of Defries. It is shown in *figs.* 529*e*, 529*f*, and 529*g*. A A *fig.* 529*e* is a cylindrical case divided into two cylindrical compart-

Digitized by Google

ments by the inflexible metallic diaphragm B. These compartments are closed at opposite ends by the metal discs C C. The latter perform the functions of pistons, and are retained in their proper position by universal joints attached to each. The

529*g*

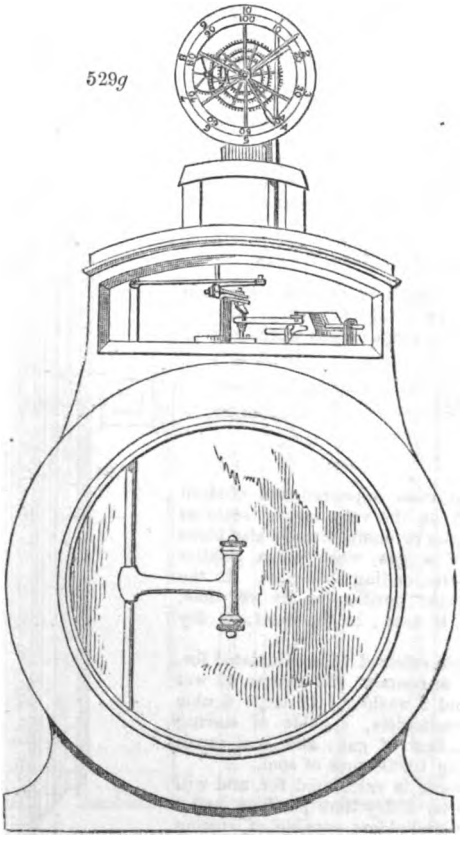

discs are restrained from moving through more than a fixed space by metallic arms and rods, shown in *fig.* 529*g*, and when this space has been once adjusted it cannot afterwards vary. It will be seen that the principle of this meter is that of a piston moving in a cylinder; but, in order to avoid the friction which such an arrangement would cause if literally carried out, bands of leather D, D, are attached, which act as hinges, and allow of the motion of the discs without friction.

The gas enters the cylinder from the upper space containing the levers, valves, &c., *fig.* 529*g*; its pressure forces the discs forward through the space limited, as above described. The flow of gas is then reversed; that is, a passage to the burners is opened from the internal space, whilst the supply is now directed into the outer chamber, thus forcing the disc back to its original position and expelling the first portion of gas through the pipes of distribution. Each motion of the disc thus evidently corresponds to a given volume of gas, and, being registered by clockwork, indicates the consumption upon the usual dial plates.

Dry gas meters are generally preferred, and consequently they have come into general use.—E. F.

To the present system of registering the quantity of gas burnt by the consumer, many honest objections may be raised. Whichever meter may be used, the record of gas passing through it is entirely removed from the inspection of the consumer. The quantity is registered by a servant of the gas company supplying the meter, and whatever may be the number of cubic feet returned by him, for that is the consumer

Digitized by Google

charged, and obliged to pay. It seldom happens that the gas companies admit that any error can occur which tells against themselves, but they frequently discover errors in the other direction. Presuming that honesty of purpose actuates equally the supplier, and the consumer, of gas, it would be perfectly easy to arrange the dials of our domestic gas meters, so that the consumer might note the quantity indicated at any time, and from his knowledge of the number of burners used by him, within any given week or month, be enabled to tell if, as compared with any other period, the indicated result was near to, or far from, the truth, and direct the attention of the servant of the gas company to the circumstance.

Arrangement of Gas Works.

Mr. Hedley, an engineer of great eminence and experience, has kindly furnished the following plans and drawings of gas works and of

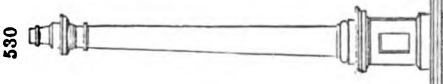

apparatus of the most approved and modern construction, and on the very largest scale as to extent of business or manufacture; also plans and drawings of a gas work on a smaller scale, with its corresponding apparatus. In the first, or large work, purification by wet lime, before described, is used; in the latter, by dry lime.

The large work referred to is calculated for, and is arranged to contain, 400 retorts, 12 wet lime purifiers, and 2 washers; 12 large double or telescopic gasholders, capable of storing 1,000.000 cubic feet of gas; and coal stores capable of holding 10,000 tons of coal.

The smaller work is calculated for, and will contain, 40 retorts, 2 dry lime purifiers, and a wash vessel; 2 gasholders capable of storing 50,000 cubic feet of gas; and coal stores sufficient for 1,000 tons of coal.

Fig. 530 is the side elevation (front view) of a gas work capable of containing 400 retorts, and all their dependencies.

Fig. 531 is the plan of the retort house, coal stores, tanks, gasholders, &c., on the largest scale, and most approved form, viz.: A the retort house, 300 feet long, 56 feet wide; B, retort beds; C, chimney stack; D, flues; E, hydraulic mains; F, coal stores, each 300 feet long, 30 feet wide; G, condensers; H, engine-houses; J, wash vessels; K, purifiers and connections; L, lime store and mixing tub; M, smiths' and fitters' shops; N, refuse lime pits; O, meter houses; P, tar tank; Q, tanks, gasholders, bridges, columns, valves, and connections; R, governors; S, coke stores; T, inlet pipes; V, outlet pipes; W, house and offices, X, stores.

Fig. 532. Front elevation of gas works on a smaller scale, where dry lime is used.

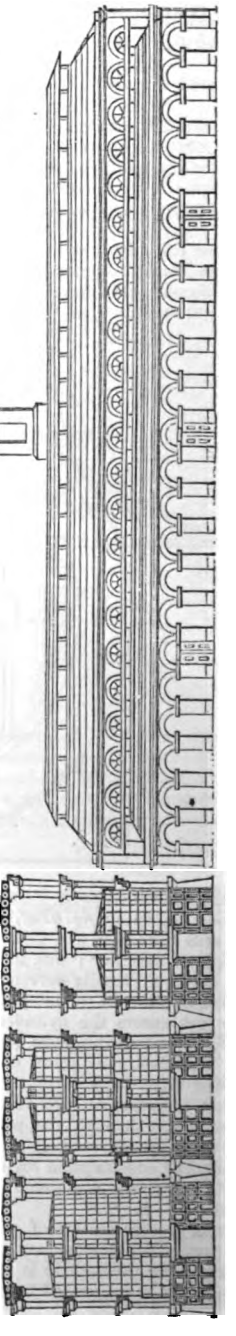

Digitized by Google

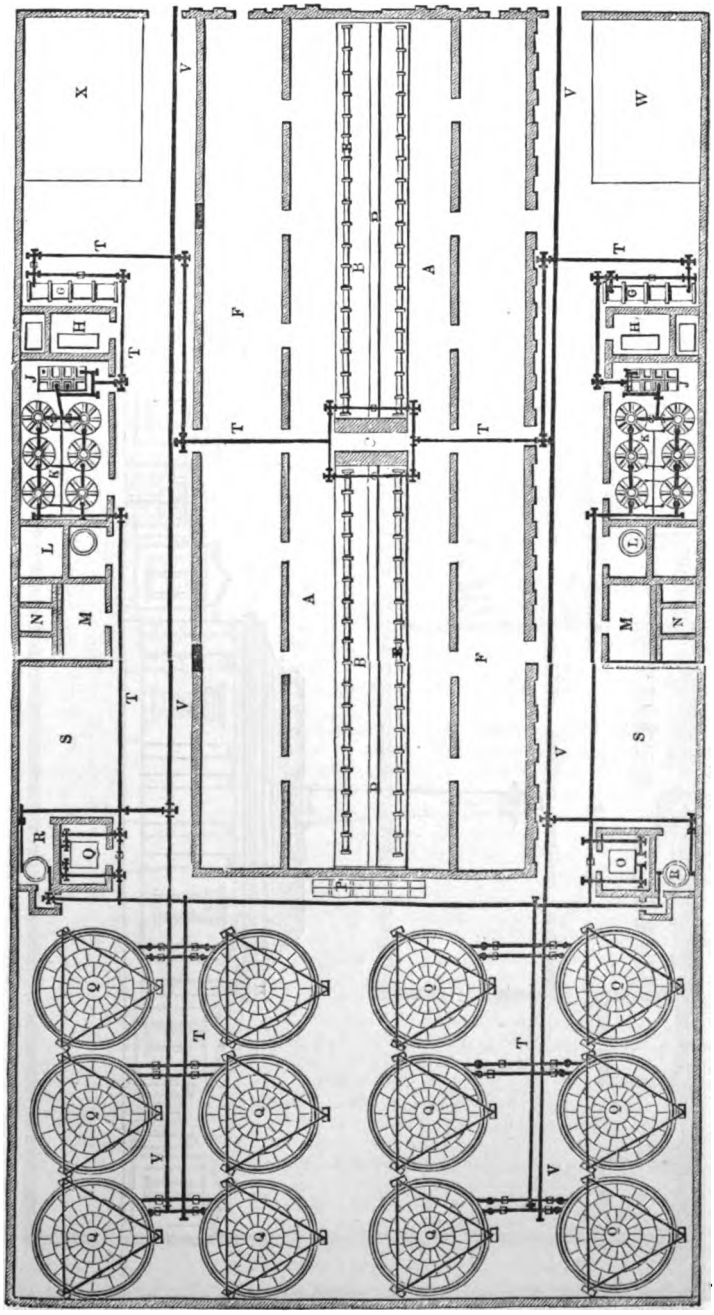

531

Digitized by Google

Fig. 533. Plan of gas works, consisting of, A, retort house; B, retort beds; C, chimney stack; D, flue; E, hydraulic main; F, coal store; G, lime store; H, washer and purifiers; J, store; K, tar-tank; L, horizontal condenser laid on the ground; M,

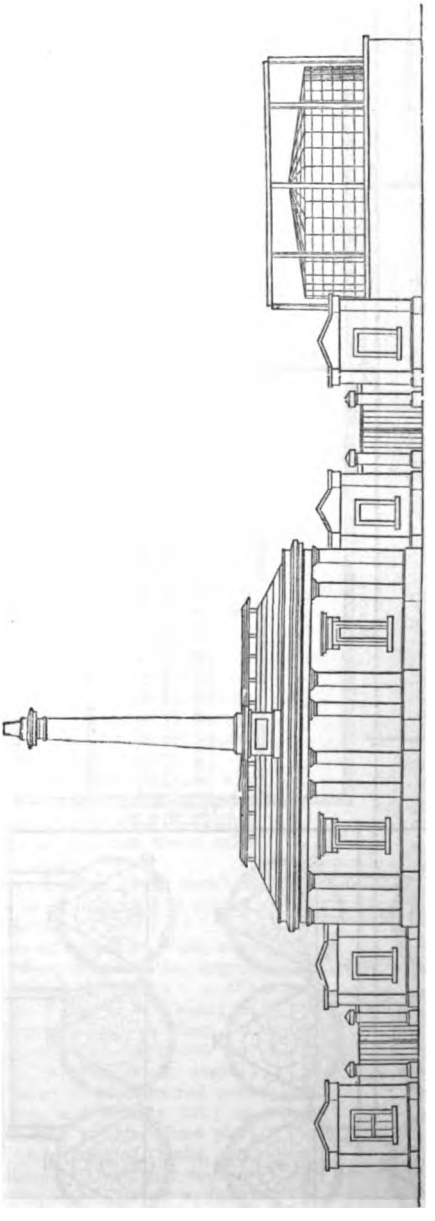

532

inlet pipe, N, outlet pipe; O, tanks and gasholders; P, meter and governor; Q, smith's shop; R, office; S, coke store.

Fig. 534. Transverse section and elevation of a bed of five retorts. A, transverse section; B, elevation.

Digitized by Google

Fig. 535. Elevation of an upright air condenser, consisting of five chambers, with a series of 10-inch pipes.
Fig. 536. Longitudinal section of a bed of 5 D retorts.
Fig. 537. End elevation and plan of air condenser A, end elevation; B, plan.

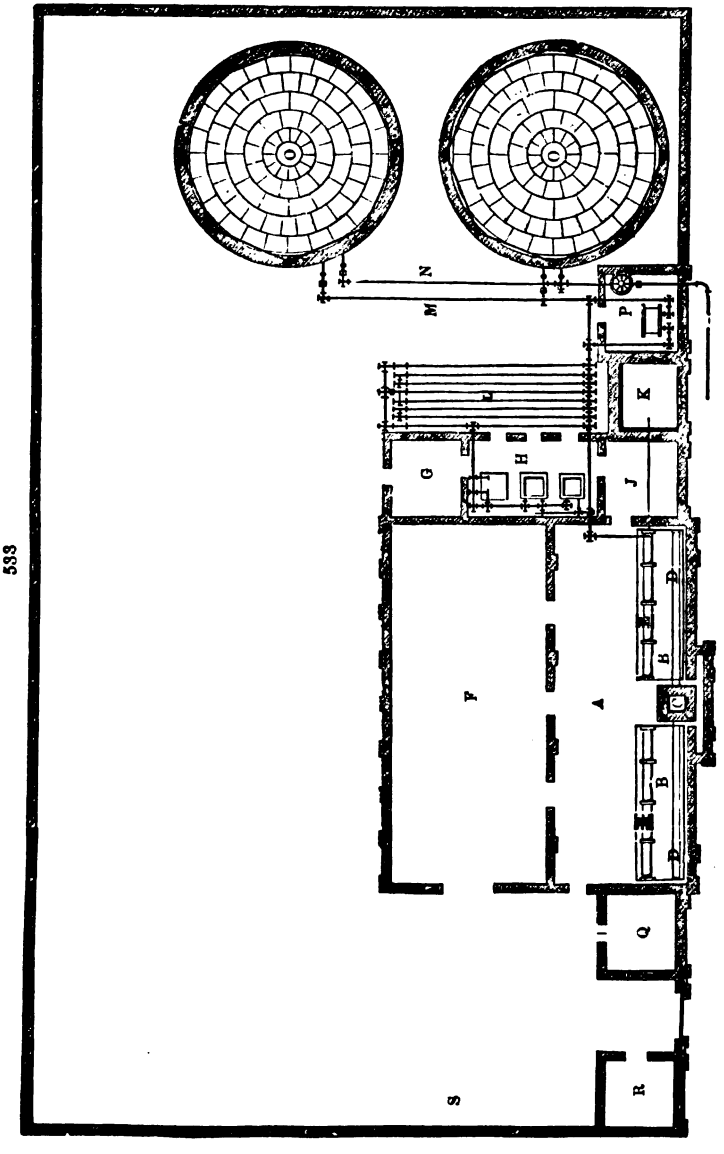

Fig. 538. Set of three wet lime purifiers and wash vessels in elevation and section, with feed-heads, agitators, valves, and connections, raised for the lime liquor to run from one purifier to the next below it, and ultimately into the refuse lime pits, viz. A, section of wash vessel; B, section of purifier; C, elevation of purifier.

Digitized by Google

534

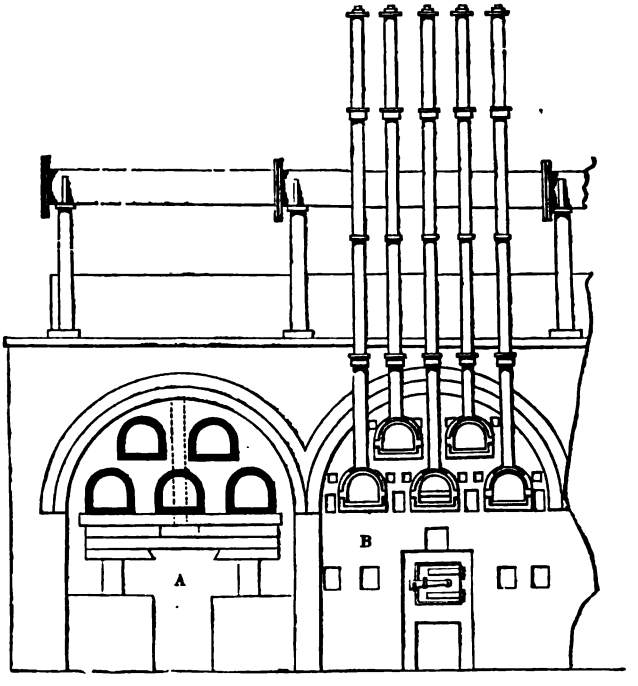

535

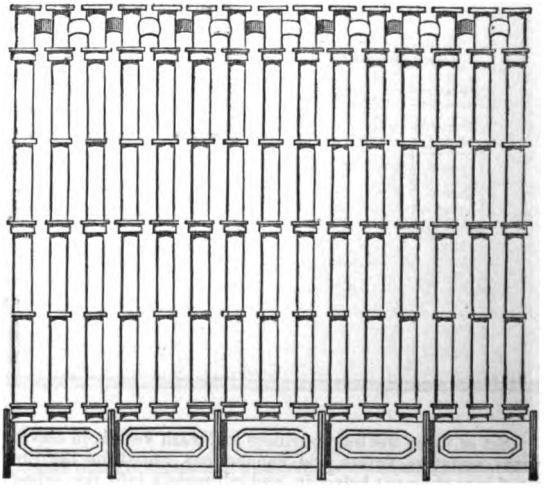

Digitized by Google

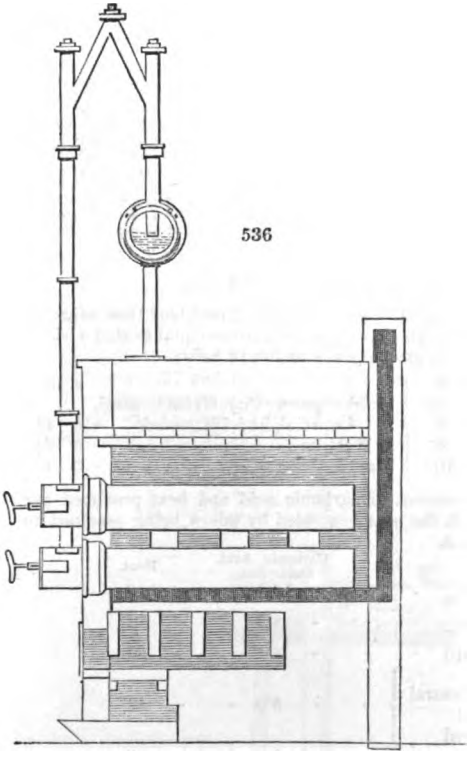

536

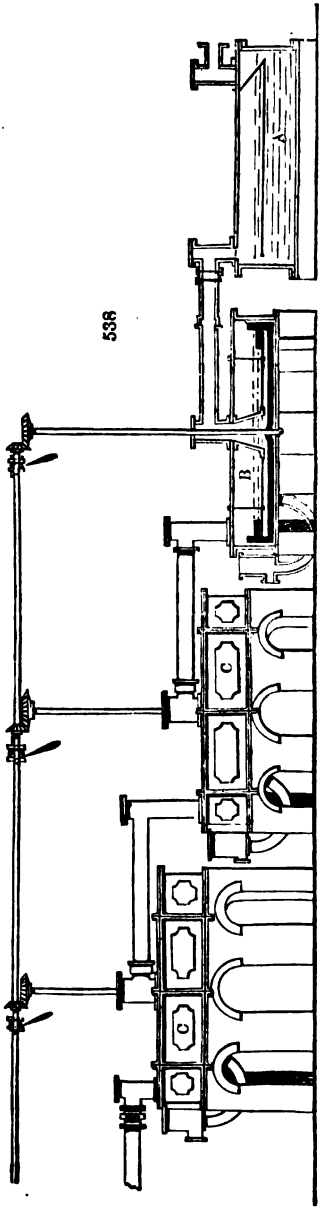

538

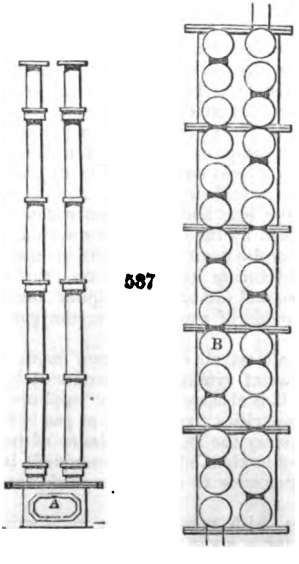

537

Digitized by Google

A Table of the number of hours Gas is burnt in each month, quarter, and year.

Time of Burning.	July.	Aug.	Sep.	Oct.	Nov.	Dec.	Jan.	Feb.	Mar.	Apl.	May.	June	Mid quar.	M c. quar.	Xms. quar.	Lady day quar.	Totl. of year.
o'clock.																	
From Dusk to 6	—	—	2	31	62	80	65	33	4	—	—	—	—	2	173	102	277
— 7	—	14	22	62	92	111	96	61	31	4	—	—	4	36	265	188	493
— 8	—	40	52	93	122	142	127	89	62	28	4	—	32	92	367	278	759
— 9	13	71	82	124	152	173	158	117	93	58	29	8	95	166	449	368	1078
— 10	44	102	112	155	182	204	189	145	124	88	60	38	186	258	541	458	1443
— 11	75	133	142	186	212	235	220	173	155	118	91	68	277	350	633	548	1808
— 12	106	164	172	217	242	266	251	201	186	148	122	98	368	442	725	638	2173
All night -	217	307	345	421	473	527	512	411	382	295	242	195	732	869	1421	1205	4327
Morning from 4	—	16	48	80	110	137	137	98	71	28	2	—	30	64	327	306	727
— 5	—	—	18	49	80	106	106	70	40	3	—	—	3	18	235	216	472
— 6	—	—	—	18	50	75	75	42	9	—	—	—	—	—	143	126	269
— 7	—	—	—	—	20	44	44	14	—	—	—	—	—	—	64	58	122

For Sundays deduct one seventh.

Economical and Sanitary Relations of Gas.

In a lecture delivered at the Royal Institution in 1853, Dr. Frankland thus estimates the comparative cost of an amount of light from various sources equal to that yielded by 20 sperm candles, each burning 120 grains per hour for 10 hours.

	s.	d.		s.	d.
Wax - - - -	7	2½	London gases: City, Great Central,		
Spermeceti - - -	6	8	Imperial, and Chartered -	0	4½
Tallow - - - -	2	8	Western - - - -	0	2¼
Sperm oil (Carcel's lamp)	1	10	Manchester gas - - - -	0	3

The following table exhibits the amount of carbonic acid and heat produced per hour from the above sources of light, the heat generated by tallow being assumed to be 100 for the purposes of comparison.

	Carbonic Acid. Cubic feet.	Heat.
Tallow - - - - - -	10·1	100
Wax, Spermaceti - - - - -	8·3	82
Sperm oil (Carcel's lamp) - - -	6·4	63
London gases: City, Great Central, Imperial, Chartered - - -	5·0	47
Western - - -	3·0	22
Manchester gas - - - - -	4·0	32

Notwithstanding the great economy and convenience attending the use of gas, and in a sanitary point of view, the high position which, as an illuminating agent, coal-gas of proper composition occupies, its use in dwelling houses is still extensively objected to. The objections are partly well founded and partly groundless. As is evident from the foregoing table, even the worst gases produce, for a given amount of light, less carbonic acid and heat, than either lamps or candles. But then, where gas is used, the consumer is never satisfied with a light equal in brilliancy only to that of lamps or candles, and consequently, when three or four times the amount of light is produced from a gas of bad composition, the heat and atmospheric deterioration greatly exceed the corresponding effects produced by the other means of illumination. There is nevertheless a real objection to the employment of gaslight in apartments, founded upon the production of sulphurous acid during its combustion: this sulphurous acid is derived from bisulphuret of carbon, and the organic sulphur compounds, which have already been referred to as incapable of removal from the gas by the present methods of purification.

These impurities, which are encountered in almost all coal-gas now used, are the principal if not the only source of the unpleasant symptoms experienced by many sensitive persons in rooms lighted with gas. It is also owing to the sulphurous acid generated during the combustion of these impurities that the use of gas is found to injure the bindings of books, and impair or destroy the delicate colours of tapestry: Therefore the production of gas free from these noxious sulphur compounds is at the present moment a problem of the highest importance to the gas manufacturer, and one which demands his earnest attention.

The high sanitary position which gas takes, with regard to the production of a minimum amount of carbonic acid and heat for a given amount of light, ought to stimulate the manufacturer to perfect the process, by removing all sulphur compounds,

Digitized by Google

and attaining the most desirable composition, so that this economical, and if pure, agreeable and sanitary light, may contribute to our domestic comfort to a much greater extent than it has hitherto done.

General Summary

For lighting London and its suburbs with gas, there were in 1852 :

18 public gas works.
12 do companies.
2,800,000*l.* capital employed in works, pipes, tanks, gasholders, apparatus.
450,000*l.* yearly revenue derived.
134,300 private burners supplied to about 40,000 consumers.
30,400 public or street do. N.B. about 2650 of these are in the *city* of London.
380 lamplighters employed.
176 gasholders; several of them double ones, capable of storing 5,500,000 cubic feet.
890 tons of coal used in the retorts on the shortest day in 24 hours.
7,120,000 cubic feet of gas used in the longest night, 24th December.
About 2500 persons are employed in the metropolis alone, in this branch of manufacture.

Between 1822 and 1827 the quantity nearly doubled itself, and that in 5 years.
Between 1827 and 1837 it doubled itself again.

The consumption of coals of all kinds for the supply of gas to the metropolis during the year ending June, 1852, is almost exactly 408,000 tons, which on an average would yield about 4000 millions of cubic feet of gas.

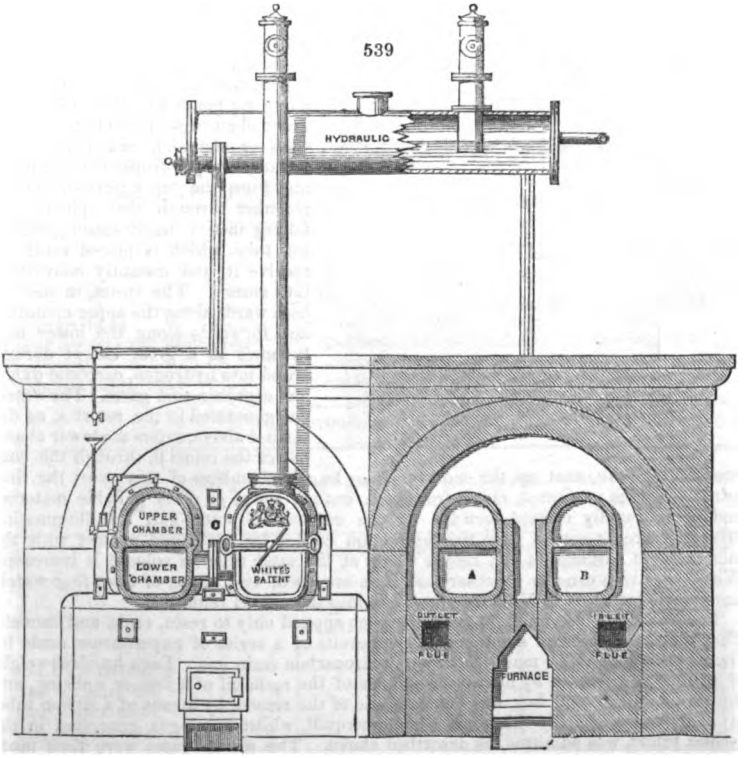

HYDROCARBON GAS.

This title has been given to illuminating gas manufactured according to a patent granted some years ago to Mr. White of Manchester. The process of manufacture consists essentially in the generation of non-illuminating combustible gases by the

Digitized by Google

action of steam upon charcoal, coke, or other deoxidising substances, in a separate retort, and the introduction of these gases, technically called water-gas, into the retort in which the illuminating gases are being generated, and in such a manner that these latter gases shall be swept out of the retort as rapidly as possible, so as to remove them from the destructive influence of a high temperature.

The retorts used for the hydrocarbon-gas process may be of various shapes and sizes. The settings are similar to those for the ordinary retorts, and any number which is necessary may be placed in an oven. They differ only from the ordinary retorts by having a horizontal partition, or diaphragm, cast in the centre, dividing the retort into two chambers, and extending to within 12 inches of the back. This diaphragm is found in practice to strengthen the sides of the retorts, and thus to add to their durability. The water-gas retorts may be cast from the same pattern as the cannel retorts, and may be set in exactly the same manner. *Figs.* 539 (p. 777) and 540 represent a setting of two retorts in one oven, and show the same in elevation, transverse section, and longitudinal section. The retorts here shown have an internal cubical capacity of about 16 feet, and the bed of two is capable of producing about 10,000 cubic feet per diem of hydrocarbon-gas. The temperature at which the retorts are worked is about the average. The water-gas is generated in the retort A, in the following manner:—The upper and lower chambers are well filled with coke or charcoal, and a very fine stream, or rapid drops, of water flowing from the tap enters the upper chamber through the siphon pipe, falling into a small steam-generating tube, which is placed inside to receive it, and instantly converts it into steam. The steam, in passing backwards along the upper chamber, and forwards along the lower one, becomes to a great extent decomposed into hydrogen, carbonic oxide, and carbonic acid gases. The water-gas generated in the retort A, as described above, enters the lower chamber of the retort B, through the connecting pipe c c, cast on the mouthpiece. In the chambers of this retort the illuminating gas is generated, either from coal, cannel, resin, or other suitable material, and being rapidly carried forward by the current of water-gas, its illuminating principles are preserved from the destruction caused by prolonged contact with the incandescent surfaces in the retort, whilst at the same time its volume is increased. When very rich cannels or other materials are used, two, three, or even four water-gas retorts are made to discharge their gas into the cannel retort.

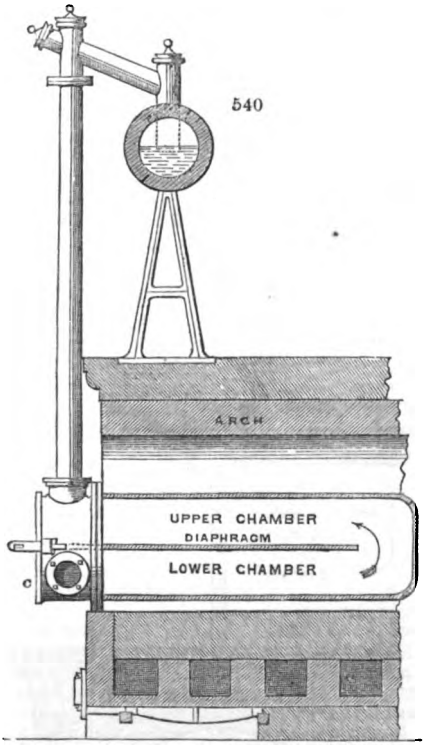

The hydrocarbon process has hitherto been applied only to resin, coals, and cannels. The following is a brief summary of the results of a series of experiments made by Dr. Frankland on the manufacture of hydrocarbon resin gas. Each hundredweight of resin was dissolved by heat in 7½ gallons of the resin oil of a former working, and the liquid, whilst still hot, was run into one of the retorts, by means of a siphon tube, in a stream about the thickness of a crowquill, whilst water-gas, generated in the second retort, was admitted, as described above. The mixed gases were then made to stream through the usual form of condensing apparatus, and were afterwards compelled to pass successively through wet and dry lime purifiers before they reached the gasholder. In order to secure a uniform mixture of the gas produced in each experiment, it was allowed to remain at rest in the gasholder for at least twelve hours before a specimen was withdrawn for analysis.

In the following tables both the practical and analytical results are given.

Digitized by Google

I. *Practical Results.*

	Average evolution of Gas per hour.	Materials Consumed.					Products Obtained.		
		Resin.	Coal.	Charcoal.	Lime.	Water.	Resin Oil.	Gas.	Gas per cwt. of Resin.
	Cub. ft.	Cwt. qr. lb.	Cwt. qr.	lb.	lb.	lb.	Gals.	Cb.ft.	
1st Experiment	930	2 1 17½	1 2	10	20	73	10·7	3340	1388
2nd „	1000	2 1 18	1 2	12	20	77	7·8	3800	1576
3rd „	- -	2 0 17	1 2	12	28	85	4·5	4157	1932
4th „	- -	2 0 7	1 2	10	28	62½	8·75	3090	1520

Average production of gas per ton of resin - - - 32,080 cubic feet.
Average production of resin oil per ton of resin - - 70·3 gallons.
Illuminating power of average gas before purification, as ascertained by shadow test, ·75 cubic feet per hour = light of one short six spermaceti candle.

II. *Analytical Results.*

	Composition of Gas before Purification.								
	Actual Amount in Cubic Feet.				Per-centage Amount				
	1st Exp.	2nd Exp.	3rd Exp.	4th Exp.	1st Exp.	2nd Exp.	3rd Exp.	4th Exp.	Average.
Hydrocarbons - - -	258·7	269·0	306·7	254·0	7·75	7·08	7·41	8·22	7·62
Light carbd. hydrogen -	587·5	1527·7	895·9	961·0	17·58	40·20	21·71	31·09	27·64
Hydrogen - - -	1315·3	1274·8	1976·2	1297·8	39·38	33·54	47 90	42·06	40·72
Carbonic oxide - -	967·9	319·2	753·3	463·5	28·98	8·40	18·26	15·04	17·67
Carbonic acid - - -	210·6	409·5	194·9	113·7	6·31	10·78	4·72	3·59	6·35
	3340·0	3800·2	4126·0	3090·0	100·00	100·00	100·00	100·00	100·00

Amount of carbon vapour contained in 1 volume of hydrocarbons = 2·8 volumes.

	Composition of Gas after Purification.				
	1st Exp.	2nd Exp.	3rd Exp.	4th Exp.	Average.
Hydrocarbons - - -	8·27	7·94	7·78	8·53	8·13
Light carburetted hydrogen -	18·76	45·06	22·79	32·25	29·71
Hydrogen - - - -	42·03	37·59	50·27	43·62	43·38
Carbonic oxide - - -	30·93	9 41	19·16	15·60	18·78
	100·00	100·00	100·00	100·00	100·00

Specific gravity of average gas before purification = ·65886.
„ „ „ after „ = ·59133.

	Value of Hydrocarbons expressed in their equivalent Volume of Olefiant Gas.	
	Value of Actual Amount.	Value of Percentage Amount in Purified Gas.
	Cubic Feet.	Cubic Feet.
1st Experiment - - -	362·2	11·58
2nd Experiment - - -	376·6	11·12
3rd Experiment - - -	428·0	10·89
4th Experiment - - -	- -	11·94

This process is especially adapted for the manufacture of gas on a small scale, as in private houses or small manufactories. The necessary operations involve little trouble and unpleasant effluvia.

Dr. Frankland has also investigated the hydrocarbon process as applied to coals and cannels, and the following is a tabulated summary of his experimental results.

Digitized by Google

Summary of Experimental Results.

Name of Coal.	Cubic feet of Gas per ton.		Illuminating power per ton in Sperm Candles.		Gain per ton by White's process.		Gain per cent. by White's process.	
	By old process.	By White's process.	By old process.	By White's process.	Quantity of gas in cubic feet.	Illuminating power in sperm candles.	Quantity of gas.	Illuminating power.
Wigan Cannel, Ince Hall -	10,900	16,120	4,816	6,448	5,220	1,632	47 9	33 9
Wigan do., Balcarres - -	10.440	15,500	4,156	5,920	5,060	1,764	48·5	4·4
Boghead Cannel - - -	13,240	38,160	11,340	21,368	24.920	9,988	198·2	87·8
Ditto, 2nd experiment -	- -	51,720	- -	20,6·8	38,480	9,308	290·6	81·8
Lesmahago Cannel - -	10,620	29,180	7,620	13,934	18,560	6,314	174 8	82·8
Methill Cannel - - -	9,660	26,400	5,316	11,088	16,840	5,772	176·2	108·1
Newcastle do., Ramsey -	10,300	15,020	5,026	5,646	4,720	620	45·8	12·3

Table, showing the quantity of Coal or Cannel requisite for producing light equal to 1000 *Sperm Candles, each burning* 10 *hours at the rate of* 120 *grs. per hour.*

Name of Coal.	Weight of Coal.	
	By old process.	By White's process.
	lbs.	lbs.
Wigan Cannel (Ince Hall) - - -	465·1	347·4
Wigan Cannel (Balcarres) - - -	539·0	378·4
Boghead Cannel - - - - -	197·5	104·8
Lesmahago Cannel - - - - -	293·9	160·7
Methill Cannel - - - - -	421·4	202·0
Newcastle Cannel - - - - -	445·7	396·7
Newcastle Coal (Pelton) - - - -	745·7	

Table Showing the quantity of Gas requisite for producing light equal to 1000 *Sperm Candles, each burning* 10 *hours at the rate of* 120 *grs. per hour.*

	Name of Gas.	Rate of Consumption per hour.	Quantity of Gas.
		Cubic Feet.	Cubi Feet.
	Wigan Cannel (Ince Hall) - - -	5	2263
	Ditto by White's process - -	5	2500
	Wigan Cannel (Balcarres) - - -	5	2512
	Ditto by White's process - -	5	2618
	Boghead Cannel - - - - -	3	1168
	Ditto by White's process - -	3	1786
	Ditto ditto, 2nd experiment -	5	2500
	Lesmahago Cannel - - - - -	4	1394
	Ditto by White's process - -	4	2094
	Methill Cannel - - - - - -	5	1798
	Ditto by White's process - -	5	2381
	Newcastle Cannel (Ramsay) - -	5	2049
	Ditto by White's process - -	5	2660
	Newcastle Coal (Pelton) - - - -	5	3356
	Resin Gas by White's process - - -	{ calculated from analysis }	3012
	Manchester Gas (June, 1851) - - -	ditto ditto	3448
London Gases.	City Company's Gas (July 15, 1851) -	5	3846
	Great Central Company's Gas, do. -	5	3546
	Chartered Company's Gas - do. -	{ calculated from analysis }	3320
	Imperial Company's Gas - do. -	ditto ditto	4099
	Western Company's Gas do. -	ditto ditto	1538

Dr. Frankland thus sums up the advantages which he conceives to result from the application of the hydrocarbon process to coals and cannels.

1. It greatly increases the produce in gas from a given weight of coal or cannel, the increase being from 46 to 290 per cent., according to the nature of the material operated upon.

2. It greatly increases the total illuminating power afforded by a given weight of

Digitized by Google

coal, the increase amounting to from 12 to 108 per cent., being greatest when coals affording highly illuminating gases are used.

3. It diminishes the quantity of tar formed, by converting a portion of it into gases possessing a considerable illuminating power.

4. It enables us profitably to reduce the illuminating power of the gases produced from such materials as Boghead and Lesmahago cannels, &c., so as to fit them for burning without smoke and loss of light.

Mr. Barlow has also experimented upon this process of gas making and finds that a very considerable gain in total illuminating power results from its use.

Mr. Clegg's investigation of this process showed, that whilst Wigan Cannel produces by the ordinary process of gas making about 10,000 cubic feet of 20 candle gas, per ton; 16,000 cubic feet of 20 candle gas, or 26,000 cubic feet of 12 candle gas, can be made from the same quantity of material by the hydrocarbon process. Also that by the application of the same process to Lesmahago Cannel 36,000 cubic feet of 20 candle gas, or 58,000 cubic feet of 12 candle gas per ton can be obtained; whilst Boghead Cannel yields 52,000 cubic feet of 20 candle gas, or 75,000 cubic feet of 12 candle gas. The following table presents in a condensed form Mr. Clegg's results as to comparative cost.

Name of Coal.	Cost of 1000 ft. of 20 candle gas by old process.	Cost of 1000 ft. of 20 candle gas by hydrocarbon process.	Cost of 1000 ft. of 12 candle gas by hydrocarbon process.
Wigan Cannel at 14*s.* per ton	*s.* *d.* 1 9¼	*s.* *d.* 1 3½	*s.* *d.* 0 11¼
Lesmahago Cannel at 18*s.* per ton	2 5½	0 11¾	0 9¼
Boghead Cannel at 20*s.* per ton	2 4½	0 11	0 9¼

The principle of the hydrocarbon process is also adopted by Messrs. Lowe and Evans in their patent process for the manufacture of gas for illuminating purposes.

In carrying out this latter improved manufacture of gas, the patentees pass gas obtained from any of the sources hereinafter specified, through heated retorts containing cannel coal, coal, lignite, resin, pitch, tar, oil, retinite, or other substance or substances capable of yielding carburetted hydrogen gas: by which means such a combination of rich and poor gases may be produced as will be exactly suited to the purposes of illumination. For this purpose, it is proposed to use retorts, open at both ends, as shown in the drawing given in *fig.* 541, which represents a longitudinal vertical section of the apparatus employed in carrying out this part of the invention. Only one retort is exhibited; but a similar arrangement of retorts may be adopted to that in general use in gas works. *a* is the retort, set in a suitable furnace for heating the same; and *b b* are mouthpieces and lids, fitted to both ends of the retort. *c* is the pipe for carrying off the gaseous products generated in the retort; and *d* is a pipe for introducing into the retort the gas which is intended to mix with the gaseous products of the substances under distillation in the retort. As soon as the retort is charged with coal or other carbonaceous matter, a cock *e*, in the pipe *d*, is opened, which allows the gas to flow into the retort; and it then passes in the direction of the arrows, and mingles with the gas that is evolved from the carbonaceous matters contained in the retort: whereby a compound gas is formed, possessing a much higher illuminating power than could have been obtained had the combination taken place after instead of at the time of the generation of the gas in the retort *a*. The gas, which is brought to the retort by means of the pipe *d*, may be forced into the retort, so as to overcome the internal pressure put on the retort by means of the hydraulic main; or, instead thereof, an exhauster may be applied to draw off the gas from the retort. Should tar, oil, resin (previously melted), or any liquid hydrocarbon be employed for the generation of the gas, it is to be run into the retort in the way generally adopted for making oil or resin gas.

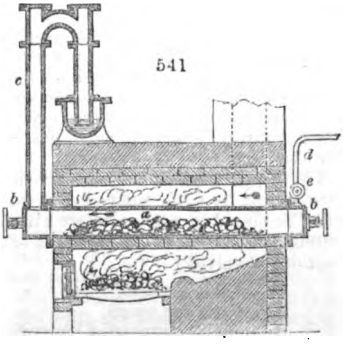

Digitized by Google

The sources from which the patentees propose to obtain inflammable gases, to be applied as above indicated, are wood, sawdust in a damp or dry state, spent tanner's bark, and other like substances capable of yielding an inflammable gas. These substances must be put into a red-hot retort, and distilled like coal. The resulting gases may be either purified at once, or passed directly to the retort containing the coal or other carbonaceous materials. As a general rule, however, these gases are preferred to be stored in gasholders for use; as, in that case, a more uniform and constant supply to the coal retort may be relied on.

Another source of inflammable gas is from coal of an inferior description, or from peat. These substances having been distilled in a retort, the resulting gas can be then employed as above indicated. It is also proposed to conduct carbonic oxide gas into retorts containing carbonaceous matters under distillation. This gas the patentees obtain from carbonic acid, by passing the latter gas (which may be obtained from any convenient source) through a retort or furnace containing red- or white-hot coke. Or, they utilise a portion of the gases generated in furnaces, by collecting these gases and converting the carbonic acid they contain into carbonic oxide, by passing them through a retort or furnace, as described for treating carbonic acid; or the gases may be conducted directly into retorts, wherein carburetted hydrogen is being generated, for the purpose of effecting the desired combination. See PEAT.

From the foregoing description, it will be understood, that the object of this part of the invention is to obtain gas of a uniform quality,—that is, possessing a definite amount of illuminating power. Now, it is well known that if the gas be too rich in carbon it will burn with a dull flame, and give off a large amount of smoke; and that, if deficient in carbon, it will burn with a blue flame, and possess very little illuminating power. It is therefore proposed to mix the rich and poor gases, obtained as above described, in such proportions as will be needful to produce a highly illuminating quality of gas. As the proportions will depend entirely on the quality of the gases to be combined, no rule can be laid down for the amount of the gas required to be passed into the retorts, wherein the distillation is proceeding. The mode, however, in which gas burns on issuing from the retort will be a sufficient test for the workmen in attendance.

WOOD GAS.

Attempts were first made in France towards the close of the last century to manufacture an illuminating gas from wood. The Thermolamp of Lebon, a wood-gas apparatus, then and for some time afterwards excited considerable attention, especially in the districts of Germany, Sweden, and Russia where coals are scarce. This mode of illumination proved however to be a complete failure, owing to the very feeble illuminating power of the gas produced, and as at this time the production of gas from coal was rapidly becoming better known, anything like a regular manufacture of wood-gas never in any case gained a footing. Subsequent trials only confirmed the failure of Lebon, so that it was universally considered impossible to produce a practically useful gas from wood by the usual process of gas manufacture. In the year 1849 Professor Pettenkofer of Munich had occasion to repeat these experiments, and he found that the gases evolved from wood at the temperature at which it carbonises consist almost entirely of carbonic acid, carbonic oxide, and light carburetted hydrogen; olefiant gas and the illuminating hydrocarbons being entirely absent. Such gas was therefore totally unfitted for illuminating purposes.

The temperature of boiling quicksilver, at which coal is not in the slightest degree decomposed, is quite sufficient to carbonise wood completely. If small pieces of wood be placed in a glass retort half filled with mercury and the latter be heated to boiling, a black lustrous charcoal is left in the retort, whilst gas of the following composition is evolved:

Carbonic acid - - - - - - - -	57·4
Carbonic oxide - - - - - - - -	35·6
Light carburetted hydrogen - - - - - -	7·0
	100·0

If however the gases and vapours produced by the above experiment be heated to a considerably higher temperature than that at which the wood is carbonised, Professor Pettenkofer found that a very different result is obtained: the volume of permanent gas is considerably augmented, whilst such an amount of illuminating hydrocarbons is produced as to render the gas actually richer in these constituents than coal-gas. Analyses of various samples of such superheated gas gave the following results: —

Digitized by Google

Carbonic acid	18 to 25 per cent.
Carbonic oxide	40 „ 50 „ „
Light carburetted hydrogen	8 „ 12 „ „
Hydrogen	14 „ 17 „ „
Olefiant gas and hydrocarbons	6 „ 7 „ „

The illuminating value of the hydrocarbons was found to be one half greater than that of an equal volume of olefiant gas.

Varieties of wood differing so much in character as pine and beech were found to yield equally good gas. These observations prove that wood-gas is indubitably entitled to rank amongst illuminating agents.

With regard to the apparatus employed various forms have been contrived so as to communicate the necessary temperature to the escaping vapours: it has been however at length found that the ordinary form of retort furnishes the necessary conditions, provided it be not filled more than one third with the charge of wood. 120 lbs. of the latter, thoroughly dried, constitutes the charge for one retort. In 1½ hours the distillation is complete, the result being, after absorption of carbonic acid, 650 cubic feet of gas, which is perfectly free from all sulphur and ammonia compounds, and possesses, according to the numerous experiments of Liebig and Steinheil, an illuminating power greater than coal-gas in the proportion of 6 : 5

The following analyses show the composition of wood-gas when made on a manufacturing scale. No. 1 is a sample of gas before purification from the works at the Munich Railway Station, and No. 2 is purified gas, as supplied to the town of Bayreuth: —

	No. 1.	Olefiant Gas.	No. 2.	Olefiant Gas.
Hydrocarbons	6·91	= 9·74	7·70	= 11·93
Light carburetted hydrogen	11·06		9·45	
Hydrogen	15·07		18·43	
Carbonic oxide	40·59		61·79	
Carbonic acid	25·72		2·21	
Nitrogen	—		·42	
	99·35		100·00	

The specific gravity of the purified wood gas is about ·700, and this, coupled with the large percentage of carbonic oxide which it contains, renders it necessary to employ burners with much larger perforations than those used for coal-gas; in fact, if wood-gas be consumed at the rate of from 3 to 4 cubic feet per hour from a coal-gas burner, it yields scarcely any light at all, whereas if consumed from a fish-tail burner with wide apertures, its illuminating power exceeds, as just stated, that of coal-gas.

Although the relative cost of wood and coal will prevent the adoption of Professor Pettenkofer's ingenious process in this country; yet, as it can also be applied with like results to peat, there is a high probability that it might be employed with great advantage in Ireland. Its rapid adoption in many German and Swiss towns proves the practicability of the process in districts where wood is cheap.—E. F.

COAL NAPHTHA. See NAPHTHA (COAL.)

COAL TAR. See NAPHTHA and PETROLEUM.

COBALT. Very little is known of the properties of this substance in the metallic state, as it is not employed as such in the arts, and can only be obtained in a state of purity in small quantities by delicate operations in the laboratory. Like the allied metals, nickel, iron, manganese, and chromium, it may be obtained in a dark-coloured pulverulent state by heating its oxide to redness, in a current of hydrogen, or in a compact button, by effecting the reduction with carbon at the highest temperature obtainable in an air furnace. Prepared in the last mentioned way it is a brilliant white, or slightly reddish metal, less fusible than nickel or iron, but more so than chromium. It is decidedly magnetic, coming next in the scale to iron. If carbon be present in excess, a portion combines with the reduced metal, forming a compound analogous to cast-iron. It may be obtained melted, in a perfectly pure state, by heating oxalate of cobalt in a closely covered crucible, to a strong white heat, when the oxide of cobalt is reduced by the carbon of the oxalic acid, thus: $CoO.C_2O_3 = Co + 2CO_2$. According to the older observers, it is very brittle, but Deville states that pure cobalt is extremely tenacious, even to a higher degree than iron. The specific gravity is 8·5. It forms a brittle alloy with iron.

ORES OF COBALT.—The number of minerals containing cobalt is but small, and they are restricted to a very few localities. The following are the most important species: —

1. SPEISS COBALT (Co. Fe. Ni) As^2. This is of a steel or lead-grey colour, and

Digitized by Google

metallic lustre, crystallising in the cubical system. The hardness is about that of felspar. Sp. gr. 6·5 to 7·2. According as one or other of the three bases prevail, three simple types of composition may be deduced, as follows:—

I.	$CoAs_2$ = Cobalt, 28·2 per cent.	Arsenic, 71 8 per cent.	Cubical Speiss cobalt.
II.	$NiAs_2$ = Nickel, 28·3 „ „	„ 71·7 „ „	„ Chloanthite Prismatic. Rammelsbergite.
III.	$FeAs_2$ = Iron, 27·2 „ „	„ 72·8 „ „	Cubical Lollingite.

The varieties I. and II. occur in considerable quantities at Schnieberg, in Saxony, associated with silver, copper, and other pyritic ores, quartz and hornstone replacing sulphate of baryta, fluor, and spathic carbonates; also at Riechelsdorf, in Hesse, in Bohemia, Sweden, and in a few localities in the United States. They have also been found in Cornwall; among other places, at Wheal Sparnon, and Saint Austell Consols. The nearest natural mineral in approach to type No. I. contains about 23 per cent. of cobalt; as a rule, however, the nickeliferous varieties are the more common. The predominance of one or other metal may be determined by exposing the specimens to damp air, when a green crust of arseniate of nickel forms on the varieties in which nickel is most abundant, while a pink incrustation is produced on those richest in cobalt. Type No. III. is the mineral known as arsenical pyrites, which, in reality, often contains a little cobalt, and is treated as a cobalt ore.

2. Cobalt Glance. Bright-white, or Tin-white Cobalt.—$(CoFe)\,(S.As)^2$ differs from Speiss cobalt by having part of the arsenic replaced by sulphur. It crystallises in the cubical system in forms similar to those of iron pyrites, is of a white colour, with a slightly bronze-red tinge, and a brilliant metallic lustre. Its hardness is less than that of felspar, and specific gravity about 6. The typical composition is: cobalt, 35·5 per cent.; arsenic, 45·2 per cent.; sulphur, 19·3 per cent. The purest natural varieties contain about 33 per cent. of cobalt; these occur in Sweden. At Siegen, in Rhenish Prussia, a variety is found containing only 8 or 9 per cent., iron forming three quarters of the whole amount of bases present. Unlike the preceding species, it does not contain nickel.

3. Linnæite or Cobalt Pyrites.—This, although crystallising in the cubical system, is analogous in composition to copper pyrites, being represented by the formula $CoS + Co_2S_3$, with 58 per cent. cobalt, and 42 per cent. sulphur: part of the base in either term may be replaced by copper, nickel, or iron. It is the richest of all cobalt ores, some varieties containing as much as 53½ per cent. of that substance. It is, however, rare, being found to a small extent only in the Siegen district, and in Sweden.

Among the products of the alteration of the above minerals, are—4. Cobalt Bloom, of the composition $3CoO^2AsO_5 + 8HO$ with 37½ per cent. of oxide of cobalt: and 5. Earthy Cobalt Ore, a variety of the substance known as Wad or Bog Manganese, which at times contains as much as 15 or 20 per cent. of the same oxide, together with those of iron, manganese, and copper. 6. Cobaltic Bismuth Ore is a finely crystalline mixture of Speiss cobalt, and bismuth-glance, found occasionally in the Schneeberg district, containing 10 per cent. cobalt, and 4 per cent. bismuth. The ores of cobalt, as they come into the hands of the smelter, are, as a rule, so much mixed up with those of nickel, that they are worked for both metals. See Nickel.

The use of cobalt in the arts is mainly confined to the production of glasses coloured blue by oxide of cobalt, which, when finely pulverised and levigated, are used as pigments under the name of *smalts*. Oxide of cobalt, in a pure state, is also prepared, to a certain extent, for the use of porcelain manufacturers. The first point to be considered, therefore, is the production of the oxide, and next the fusion with a sufficient quantity of siliceous matter. Earthy cobalt ore may be used in the fusion process, without any further preparation; but those that contain sulphur and arsenic must be subjected to a preliminary calcination. *Fig.* 542 is a longitudinal, and *fig.* 543 a vertical section of the roasting furnace employed for this purpose in the Saxon smalt works. The fire grate is placed on one side of the hearth, which is of irregular form, being about 6 feet in breadth at the further end of the furnace, diminishing to 27 inches at the working door. Wood is the fuel employed. The arsenical vapours given off during roasting, pass out through the openings, *a*, *a*, by a system of flues, *b*, *b*, in the direction shown by the arrows, into a chamber where they are deposited, and may be subsequently used in the manufacture of arsenical products. The charge is from 3 to 5 cwts.; the degree to which the roasting is carried varies with the composition of the ores. When many foreign metals are present, they must not be roasted "dead" or "sweet," but sufficient arsenic or sulphur must be left to form with the less oxidisable metals, more especially copper and nickel, a speiss or regulus which separates from the blue glass produced in the

Digitized by Google

fusion process, and subsides to the bottom of the melting pot. The oxides of those metals that are more easily oxidisable than cobalt, such as iron and bismuth, may be partially removed by an addition of metallic arsenic in the fusion, whereby the latter oxide is reduced and passes into the speiss with the production of arsenious acid, which tends to heighten the colours produced. Earthy cobalt ores containing much iron, require an addition of arsenious acid, in order to convert the protoxide of iron, which has a strong colouring power, into peroxide, which is of less consequence. In some works, the roasting is performed in muffle furnaces, the hearth being heated from below, so that the ore does not come into contact with the flame. Ores containing bismuth are subjected to the process of liquation previously to roasting.

542

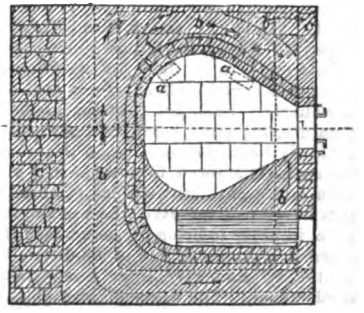

543

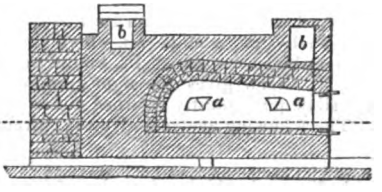

When the ores are very impure, or when it is wished to produce very deep blue colours, they are subjected to the process of concentration. Common ores, and those that are rich in copper, are first slightly roasted, and then fused in crucibles in the smalt furnace described below, with broken glass fragments, charcoal dust, and carbonate of potash. When the mixture is in a state of complete fusion, the slag is partly removed at intervals, and fresh quantities of ore are added, until a sufficient quantity of speiss is produced. In this process, the oxides of iron and copper in the ore form an easily fusible slag with the glass, while the cobalt is reduced by the charcoal to the metallic state, and unites with the arsenic to form a speiss. If the roasting is carried too far, or if there is an insufficiency of arsenic or of reducing matters in the mixture, a certain amount of oxide of cobalt will be taken up by the slag. The concentrated speiss produced is then pulverised and roasted "sweet," leaving a nearly pure basic arseniate of oxide of cobalt. The smalt furnace, *figs.* 544 and 545, is similar in construction to that used for melting flint glass. The fire-place, in which wood is burnt, is a long narrow rectangular chamber, with a vaulted floor perforated by the draught holes, *d*, *d*; *c*, the lower chamber, is the ash pit; the flame passes through the hole, *a*, into the melting chamber above, which is a low domed structure, containing six melting pots; *f*, *f*, *f*, are the working doors,—they are faced with cast iron frames in

544

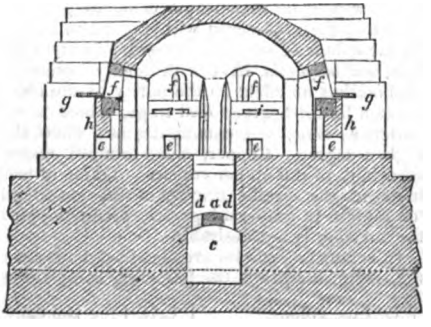

545

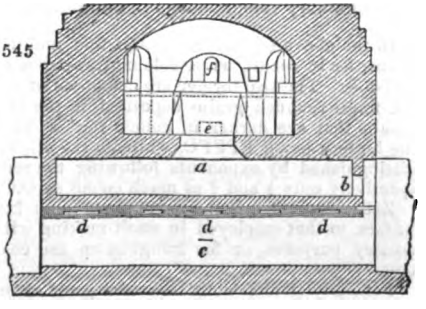

Digitized by Google

the ordinary way. The waste flame, after heating the pots, passes through the small flues, *i*, *i*, into a system of chambers, where it is employed in the accessory operations of calcining quartz, or drying wood for fuel. *h*, *h*, are arches through which the pots are inserted or removed,—they are built up when the furnace is at work. At *e*, *e*, *e*, are small holes, corresponding with similar ones in the pots, for removing the speiss formed during the fusion. The charge consists of roasted ore, with from 1 to 16 times its weight of quartz previously calcined and reduced to a fine powder, and carbonate of potash to the extent of about $\frac{3}{4}$ or $\frac{4}{5}$ of the amount of the quartz. Each pot contains about 3 cwts.; the fusion takes place at a low temperature, the glass being frequently stirred with an iron rod in order to render it perfectly homogeneous; when this point is attained, the stirring is discontinued, and the speiss is allowed to settle. In 6 or 8 hours, the glass is sufficiently fluid, and it is then ladled out with iron ladles, and thrown into water. After the contents of two pots have been removed, the working doors are closed, and the fire is urged for some time, in order to bring the contents of the remaining pots which have somewhat cooled down to a proper degree of fluidity. *Grinding the smalts.*—The blue glass, rendered brittle by sudden cooling, is stamped or crushed, sifted, and ground wet, under hard stones. The finely divided glass from the mill is then passed through a system of washing vats, the first three give a coarse sand which is usually returned to the mill for further grinding, the finer slime is allowed only a few minutes to deposit in No. 4, about a quarter of an hour in No. 5, then it filters more slowly through No. 6, and finally into a slime pit, where the whole of the suspended matter is deposited. The darkest coloured smalts, known as *Kings blue* or *azure*, are found in vats Nos. 4 and 5. No. 6 gives the lighter coloured *tub smalts*. The pale blue powder from the slime pit is mostly returned to the melting furnace.

The following analyses give the extreme types of composition in smalts.

	SiO_2.	Al_2O_3.	FeO.	CoO.	KONaO.	
I. Norwegian high coloured -	70·9	0·4	0·3	6·5	21·4	with some carbonate of lime.
II. German pale coloured -	72·1	1·8	1·4	2·0	20·0	

One part of oxide of cobalt communicates a distinctly bluish tinge to 240 parts of glass; with more than 18 per cent. the glass becomes black. The following are the principal facts observed with regard to the influence of the oxides of other metals on the colour of smalts. *Baryta* heightens the tone, giving an indigo tinge; *soda*, *lime*, *and magnesia*, have a decidedly lowering effect, and produce a reddish shade; *alumina* has no effect on the purity of the colour, but lowers its intensity; *iron* produces a blackish-green dull tinge, which is very prejudicial to the higher coloured varieties; *manganese* communicates a violet shade, as does also *nickel*, but in a much higher degree. Copper, zinc, bismuth, and antimony, all give a dull dirty shade, especially to the higher colours. Oxide of lead has no effect on the colour, but as it increases the specific gravity of the glass, and causes the ground smalts to subside too rapidly in the washing vats, producing an incomplete separation, its presence in the mixture is not desirable.

In commerce, smalts are classified both according to their contents in cobalt, and the size of the grain, the following being the chief marks.

F.C. Fine colour.	F.C.B. Fine Bohemian colour.	F.E. Fine Eschel.
M.C. Middling colour.	M.C.B. Middling Bohemian colour.	M.E. Middling Eschel.
O.C. Ordinary colour.	O.C.B. Ordinary Bohemian colour.	O.E. Ordinary Eschel.

In the above scheme, the words fine, middling, and ordinary, indicate the relative quantities in cobalt, while colour, Bohemian colour, and Eschel, express the *state* of division. The two former are composed of angular fragments, while the latter are the finest-rounded grains deposited in the lowest washing vats and the slime pits. Smalts that are darker in colour than F. are indicated by multiples of that letter, the highest being FFFFC, while on the other hand, those that are lower than O. are distinguished by exponents following the second letter, thus OC^2 OC^4 contain respectively only $\frac{1}{2}$ and $\frac{1}{4}$ as much cobalt as O.C.

Zaffre or Safflor, is the name given to a mixture of roasted ore and quartz, similar, in fact, to that employed in smalt-making without the potash. It is used either for pottery purposes, or for bringing up the colour in smalts made from low-classed ores.

Formerly smalts were used to a great extent in colouring paper, but at present artificial ultramarine is almost exclusively used for this purpose (see ULTRAMARINE).

For an account of Plattner's method of assaying nickel and cobalt ores, which is very similar in principle to the manufacture of smalt, see NICKEL.

Digitized by Google

Of Cobalt we imported as follows:—

	1863		1864	
	Cwts.	Computed real value.	Cwts.	Computed real value.
SMALTS:				
From Hamburg - - - -	842	£3,998	792	£6,633
Holland - - - -	461	2,196	671	5,637
Hanover - - - -	- -	- -	154	1,294
Bremen - - - -	- -	- -	74	585
Other parts - - - -	79	368	26	218
	1,382	6,562	1,717	14,367
ZAFFRE - - - -	744	5,208	352	2,464
	Tons.		Tons.	
COBALT, metallic - - -	1	353	1	875
Ore of Cobalt - - -	446	19,405	939	41,830
Oxide of Cobalt - - -	16	5,311	7	10,963

COBALT BLUE, or THENARD'S BLUE is prepared by precipitating a solution of sulphate or nitrate of cobalt by phosphate of potash, and adding to the resulting gelatinous deposit from three to four times its volume of freshly deposited alumina, obtained by the addition of carbonate of soda to a solution of common alum. This mixture, after being well dried and calcined in a crucible, affords, when properly ground, a beautiful blue pigment.

COCA. See ERYTHROXYLON COCA.

COCCOLOBUS. (*κόκκος*, a berry; *λοβός*, a pod.) The *Coccolobus unifera*, or sea-side grape, is a tree about twenty feet in height, with leaves of a glossy green colour —the nerves being a deep red. The fruit is in bunches, and is eaten in the West Indies. The wood yields a red colouring matter, which is used for a dye; and the wood itself, which is hard, is employed in cabinet work. A decoction of this plan is evaporated to form a substance known as Jamaica Kino.

COCCULUS INDICUS, or Indian berry, is the fruit of the *Menispermum cocculus*, a large tree, which grows upon the coasts of Malabar, Ceylon, &c. The fruit is blackish, and of the size of a large pea. It owes its narcotic and poisonous qualities to the vegeto-alkaline chemical principle called *picrotoxia*, of which it contains about one-fiftieth part of its weight. It is sometimes thrown into waters to intoxicate or kill fishes; and it is said to have been employed to increase the inebriating qualities of ale or beer. Its use for this purpose is prohibited by Act of parliament, under a penalty of 200*l.* upon the brewer, and 500*l.* upon the seller of the drug.

However, Dr. Pereira states, "I am not acquainted with any official returns of the quantity annually brought over. From a druggist's private books I find that in 1834 above 2,500 bags entered—and this probably is much below the quantity imported. The greater part is consumed for illegal practices—principally for adulterating beer and ale." Morrice, in his treatise on brewing, directs that in the manufacture of porter, three pounds of cocculus indicus should be added to every ten quarters of malt. "It gives," says he, "an inebriating quality which passes for strength of liquor;" and he adds, "that it prevents the second fermentation in bottled beer, and consequently the bursting of the bottles in warm climates."

The Editor of this work had a fluid extract, the name of which was unknown to the custom-house officers, submitted to him some years since. This was an extract of this deleterious drug, of which a very large quantity was then in the London docks.

The powder of the berries mixed with lard is used to destroy pediculi: hence the Germans call those grains *Läusekorner*, or *lousegrains*.

Our recent importations of Cocculus indicus have been as follows:—1863, 45 cwts. of the value of £36, and 1864, 8 cwts. of the value of £10.

COCHINEAL. (*Cochenille*, Fr.; *Kochenille*, Germ.) Cochineal was at first taken for a seed, but was proved by Leeuwenhoeck to be an insect, the female of that species of shield-louse, or *coccus*, discovered in Mexico so long ago as 1518. It is brought to us from Mexico, where the animal lives upon the *cactus opuntia* or *nopal*. Two sorts of cochineal are gathered—the wild from the woods, called by the Spanish name *grana silvestra*; and the cultivated, or the *grana fina*, termed also *mesteque*, from the name of a Mexican province. The first is smaller, and covered with a cottony down, which increases its bulk with a matter useless in dyeing; it yields, therefore, in equal weight,

Digitized by Google

much less colour, and is of inferior price to that of the fine cochineal. But these disadvantages are compensated in some measure to the growers by its being reared more easily and less expensively; partly by the effect of its down, which enables it better to resist rains and storms.

The wild cochineal, when it is bred upon the field nopal, loses in part the tenacity and quantity of its cotton, and acquires a size double of what it has on the wild opuntias. It may therefore be hoped, that it will be improved by persevering care in the rearing of it, when it will approach more and more to fine cochineal.

The fine cochineal, when well dried and well preserved, should have a grey colour bordering on purple. The grey is owing to the powder which naturally covers the insects, of which a little adheres, and to a waxy fat. The purple shade arises from the colour extracted by the water in which they were killed. The grain is wrinkled with parallel furrows across its back, which are intersected in the middle by a longitudinal one: hence, when viewed by a magnifier, or even a sharp naked eye, especially after being swollen by soaking for a short time in water, it is easily distinguished from the factitious, smooth, glistening, black grains, of no value, called East India cochineal, with which it is often shamefully adulterated by certain London merchants. The genuine cochineal has the shape of an egg, bisected through its long axis, or of a tortoise, being rounded like a shield upon the back, flat upon the belly, and without wings.

These female insects are gathered off the leaves of the nopal plant after it has ripened its fruit, a few only being left for brood: they are killed, either by a momentary immersion in boiling water, by drying upon heated plates, or in ovens: the last become of an ash-grey colour, constituting the *silver* cochineal, or *jaspeada*; the second are blackish, called *negra*, and are most esteemed, being probably driest; the first are reddish brown, and reckoned inferior to the other two. The dry cochineal being sifted, the dust, with the imperfect insects and fragments which pass through, are sold under the name of *granillo*. Cochineal keeps for a long time in a dry place. Hellot says that he has tried some 130 years old, which produced the same effect as new cochineal.

We are indebted to MM. Pelletier and Caventou for a chemical investigation of cochineal, in which its colouring matter was skilfully eliminated.

Purified sulphuric ether acquired by digestion with it a golden-yellow colour, amounting, according to Dr. John, to one tenth of the weight of the insect. This infusion left, on evaporation, a fatty wax of the same colour.

Cochineal, exhausted by ether, was treated with alcohol at 40° B. After 30 infusions in the digester of M. Chevreul, the cochineal continued to retain colour although the alcohol had ceased to have any effect on it. The first alcoholic liquors were of a red verging on yellow. On cooling, they let fall a granular matter. By spontaneous evaporation, this matter, of a fine red colour, separated, assuming more of the crystalline appearance. These species of crystals dissolved entirely in water, which they tinged of yellowish-red.

This matter has a very brilliant purple-red colour; it adheres strongly to the sides of the vessels; it has a granular and somewhat crystalline aspect, very different, however, from those compound crystals alluded to above; it is not altered by the air, nor does it sensibly attract moisture. Exposed to the action of heat, it melts at about the fiftieth degree Centigrade (122° Fahr.). At a higher temperature it swells up, and is decomposed with the production of carburetted hydrogen, much oil, and a small quantity of water, very slightly acidulous. No trace of ammonia was found in these products.

The colouring principle of cochineal is very soluble in water. By evaporation, the liquid assumes the appearance of syrup, but never yields crystals. It requires of this matter a proportion almost imponderable to give a perceptible tinge of bright purplish red to a large body of water. Alcohol dissolves this colouring substance, but, as we have already stated, the more highly it is rectified, the less of it does it dissolve. Sulphuric ether does not dissolve the colouring principle of cochineal; but weak acids do, possibly owing to their water of dilution. No acid precipitates it in its pure state. This colouring principle, however, appears to be precipitable by all the acids when it is accompanied by the animal matter of the cochineal.

The affinity of alumina for the colouring matter is very remarkable. When that earth, newly precipitated, is put into a watery solution of the colouring principle, this is immediately seized by the alumina. The water becomes colourless, and a fine red lake is obtained, if we operate at the temperature of the atmosphere; but if the liquor has been hot, the colour passes to crimson, and the shade becomes more and more violet, according to the elevation of the temperature, and the continuance of the ebullition.

The salts of tin exercise upon the colouring matter of cochineal a remarkable

Digitized by Google

action. The muriatic protoxide of tin forms a very abundant violet precipitate in the liquid. This precipitate verges on crimson, if the salt contains an excess of acid. The muriatic deutoxide of tin produces no precipitate, but changes the colour to scarlet-red. If gelatinous alumina be now added, we obtain a fine red precipitate which does not pass to crimson by boiling.

To this colouring principle the name *carminic acid* has been given. It forms the basis of the beautiful pigment called carmine. A very complete examination of the colouring matter of the cochineal insect has been made by Mr. Warren De la Rue. —See CARMINE.

The carmines found in the shops of Paris have been analysed, and all yielded the same products. They were decomposed by the action of heat, with the diffusion at first of a very strong smell of burning animal matter, and then of sulphur. A white powder remained, amounting to about one-tenth of the matter employed, and which was found to be alumina. Other quantities of carmine were treated with a solution of caustic potash which completely dissolved them, with the exception of a fine red powder, not acted on by potash and concentrated acid, and which was recognised to be red sulphuret of mercury, or vermilion. This matter, evidently foreign to the carmine, appears to have been added, in order to increase its weight.

The preceding observations and experiments seem calculated to throw some light on the art of dyeing scarlet and crimson. The former is effected by employing a cochineal bath, to which there have been added, in determinate proportions, acidulous tartrate of potash, and nitro-muriatic deutoxide of tin. The effect of these two salts is now well known. The former, in consequence of its excess of acid, tends to redden the colour, and to precipitate it along with the animal matter; the latter acts in the same manner, at first by its excess of acid, then by the oxide of tin which falls down also with the carmine and animal matter and is fixed on the wool, with which it has of itself a strong tendency to combine. MM. Pelletier and Caventou remark, that "to obtain a beautiful shade, the muriate of tin ought to be entirely at the maximum of oxidisement; and it is in reality in this state that it must exist in the solution of tin prepared according to the proportions prescribed in M. Berthollet's treatise on dyeing.

We hence see why, in dyeing scarlet, the employment of alum is carefully avoided, as this salt tends to convert the shade to a crimson. The presence of an alkali would seem less to be feared. The alkali would occasion, no doubt, a crimson-coloured bath; but it would be easy in this case to restore the colour, by using a large quantity of tartar. We should, therefore, procure the advantage of having a bath better charged with colouring matter and animal substance. It is for experience on the large scale to determine this point. As to the earthy salts, they must be carefully avoided.

To obtain crimson, it is sufficient, as we know, to add alum to the cochineal bath, or to boil the scarlet cloth in alum water. It is also proper to diminish the dose of the salt of tin, since it is found to counteract the action of the alum.

The alkalies ought to be rejected as a means of changing scarlet to crimson. In fact, crimsons by this process cannot be permanent colours, as they pass into red by the action of acids.

According to M. Von Grotthuss, carmine may be deprived of its golden shade by ammonia, and subsequent treatment with acetic acid and alcohol. Since this fact was made known, M. Herschel, colour maker at Halle, has prepared a most beautiful carmine.

The officers of Her Majesty's Customs detected some time since a system of adulterating cochineal, which had been practised for many years upon a prodigious scale by a mercantile house in London. Dr. Ure stated that he had analysed about 100 samples of such cochineal, from which it appears that the genuine article is moistened with gum water, agitated in a box or leather bag, first, with sulphate of baryta in fine powder, afterwards with bone or ivory black, to give it the appearance of *negra* cochineal, and then dried. By this means about 12 per cent. of worthless heavy spar is sold at the price of cochineal, to the enrichment of the sophisticators, and the disgrace and injury of British trade and manufactures.

The specific gravity of genuine cochineal is 1·25; that of the cochineal loaded with the barytic sulphate, 1·35. This was taken in oil of turpentine, and reduced to water as unity, because the waxy fat of the insects prevents the intimate contact of the latter liquid with them, and the ready expulsion of air from their wrinkled surface. They are not at all acted upon by the oil, but are rapidly altered by water, especially when they have been gummed and barytified.

Humboldt states that so long ago as the year 1736, there was imported into Europe from South America, cochineal to the value of 15 millions of francs. Its high price had for a long time induced dyers to look out for cheaper substitutes in dyeing red,

Digitized by Google

and since science has introduced so many improvements in tinctorial processes, both madder and lac have been made to supersede cochineal to a very great extent.

In order to ascertain the value of cochineal for dyeing we must have recourse to comparative experiments. We are indebted to MM. Robiquet and Anthon for two methods of determining the quality of cochineals, according to the quantity of carmine they contain. The process of M. Robiquet consists in decolourising equal volumes of decoction of different cochineals by chlorine. By using a graduated tube, the quality of the cochineal is judged of by the quantity of chlorine employed for decolourising the decoction. The process of M. Anthon is founded on the property which the hydrate of alumina possesses of precipitating the carmine from the decoction so as to decolourise it entirely. The first process, which is very good in the hands of a skilful chemist, does not appear to us to be a convenient method for the consumer; in the first place, it is difficult to procure perfectly identical solutions; in the next place, it is impossible to keep them a long time without alteration. We know that chlorine dissolved in water reacts, even in diffused light, on this liquid; decomposes it, appropriates its elements, and gives rise to some compounds which possess an action quite different from that of the chlorine solution in its primitive state. The second process seems to us to be preferable, as the proof liquor may be kept a long while without alteration. A graduated tube is also used; each division represents one hundredth of the colouring matter. Thus the quantity of proof liquor added exactly represents the quantity in hundredths of colouring matter contained in the decoction of cochineal which has been submitted to examination. The following remarks from a practical dyer are valuable.

"The colouring matter of cochineal being soluble in water, I have used this solvent for exhausting the different kinds which I have submitted to examination in the colourimeter. I operated in the following manner:—I took a grain of each of the cochineals to be tried, dried at 120 Fahr.; I submitted them five consecutive times to the action of 200 grains of distilled water at water-bath heat, each time for an hour; for every 200 grains of distilled water I added two drops of a concentrated solution of acid sulphate of alumina and of potash. This addition is necessary to obtain the decoctions of the different cochineals exactly of the same tint, in order to be able to compare the intensity of the tints in the colourimeter.*

"In order to estimate a cochineal in the colourimeter, two solutions, obtained as described above, are taken; some of these solutions are introduced into the colourimetric tubes as far as zero of the scale, which is equivalent to 100 parts of the superior scale; these tubes are placed in the box, and the tint of the liquids enclosed is compared by looking at the two tubes through the eye-hole; the box being placed so that the light falls exactly on the extremity where the tubes are. If a difference of tint is observed between the two liquors, water is added to the darkest (which is always that of the cochineal taken as type) until the tubes appear of the same tint.†

"The number of parts of liquor which are contained in the tube to which water has been added is then read off; this number, compared with the volume of the liquor contained in the other tube, a volume which has not been changed, and is equal to 100, indicates the relation between the colouring power and the relative quality of the two cochineals. And if, for example, 60 parts of water must be added to the liquor of good cochineal, to bring it to the same tint as the other, the relation of volume of the liquids contained in the tubes will be in the case as 160 is to 100, and the relative quality of the cochineals will be represented by the same relation, since the quality of the samples tried is in proportion to their colouring power."—*Napier.*

The exports from Guatemala consist principally of cochineal, the staple and almost the only article of exportation for a number of years past. It is chiefly produced in Old Guatemala, nine leagues distant from Guatemala, and also in Amatellan about six leagues distant. The rising of this insect is subject to so many accidents and contingencies that it is excessively precarious, and; above all, the weather has a great effect upon it. Taking all this into consideration it is surprising that attention has not been directed to the cultivation and production of other articles suited to the climate and soil of Guatemala, and less liable to destruction by unseasonable rains and atmospheric changes than cochineal. It is reasonably to be feared that, if a longer time be suffered to pass, the cochineal of this country cannot compete with that of Teneriffe, and other parts of the world, where it is now beginning to be cultivated with success; and, should this happen, it would tend to diminish the trade of this country with England. The following is a statement of the *exports* of cochineal from

* Care must be taken not to add to the water, which serves to extract the colouring matter from the different cochineals, more than the requisite quantity of acid sulphate of alumina and solution of potash, because a stronger dose would precipitate a part of the colouring matter in the state of lake.

† For diluting the liquors the same water must always be used which has served to extract the colouring matter of the cochineals under examination, otherwise the darkest decoction would pass into violet, as water was added to it, to bring back the tint to the degree of intensity as that of the decoction to which it is compared.

Digitized by Google

this colony :—1851, 1,231,610 lbs.; 1852, 567,000 lbs.; 1853, 312,700 lbs.; 1854, 1,757,300 lbs.; 1855, 1,204,510 lbs. The produce of cochineal in Guatemala in 1858 exceeds that of the preceding year by about 547,000 lbs.—*Consul's Report.*

In 1863 and 1864 we *imported* cochineal in the quantities given, from the following places :—

	1863		1864	
	Cwts.	Computed real value.	Cwts.	Computed real value.
From Holland	731	£13,343		
Canary Islands	7,769	134,822	6,249	£111,795
United States :				
N. Atlantic Ports	16	239		
Ports on the Pacific	1,512	24,696		
Mexico	1,065	18,526	2,790	49,475
Central America	9,642	141,835	4,683	82,714
New Granada	3,816	63,284	8,098	137,424
Belize (Honduras)	606	9,542	976	19,480
Other parts	963	14,917	600	11,256
	26,120	421,222	23,396	412,144
Granilla	530	3,109	359	2,503
Dust	1,039	1,901	477	1,374

COCK-METAL. An inferior metal; a mixture of copper and lead used for making cocks. See ALLOY.

COCOA. A well-known preparation from the seeds (*nuclei cacao*) of the *Theobroma cacao.* It is stated to be made from the fragments of the seed-coats mixed with portions of the kernels. See CACAO.

COCOA-NUTS. (*Noix de Coco*, Fr.; *Cocosnuss*, Germ.) The cocoa-nut tree (*cocos nucifera*) is a native of tropical climates. It is one of the most important and valuable of the palms. In 1863, 2,581,912 cocoa-nuts were *imported*, valued at 17,093*l.*, and in 1864, 2,389,198, valued at 22,041*l.*

COCOA-NUT OIL. Cocoa-nut oil is obtained by two processes,—one is by pressure, the other by boiling the bruised nut and skimming off the oil as it forms on the surface.

It is a white solid having a peculiar odour. It fuses a little above 70° Fahr.; becomes readily rancid, and dissolves easily in alcohol. It consists of a solid fat called *cocin* or *cocinine* (a combination of glycerine and cocinic, or coco-stearic acid), $C^{27}H^{26}O^3 + 2HO$; or, according to Richardson, $C^{27}H^{26}O^3 + Aq$, and of a liquid fat or oleine. Cocoa-nut oil is used in the manufacture of soap and candles.

Mr. Soames obtained a patent in September, 1829, for making stearine and elaine by the following process:—

He takes the substance called cocoa-nut oil, in the state of lard, in which it is imported into this country, and submits it to a strong hydraulic pressure, having made it up in small packages, 3 or 4 inches wide, 2 feet long, and 1 or 1½ inch thick. These packages are formed by first wrapping up the said substance in a strong linen cloth, of close texture, and then in an outward wrapper of strong sail cloth. The packages are to be placed side by side, in single rows, between the plates of the press, allowing a small space between the packages for the escape of the *elaine.*

The temperature at which the pressure is begun, should be from about 50° to 55°, or in summer as nearly at this pitch as can be obtained, and the packages of the said substance intended for pressure should be exposed for several hours previously to about the same temperature. When the packages will no longer yield their oil or elaine freely at this temperature, it is to be gradually raised; but it must at no time exceed 65°, and the lower the temperature at which the separation can be effected, the better will be the quality of the oil expressed.

When the packages are sufficiently pressed, that is, when they will give out no more oil, or yield it only in drops at long intervals, the residuum in them is to be taken out and cleansed and purified, which is done by melting it in a well-tinned copper vessel, which is fixed in an outer vessel, having a vacant space between, closed at the top, into which steam is admitted, and the heat is kept up moderately for a sufficient time to allow the impurities to subside; but if a still higher degree of purity is required, it is necessary to pass it through filters of thick flannel lined with blotting paper.

Having been thus cleansed or purified, it is fit for the manufacture of candles, which are made by the ordinary process used in making mould tallow candles. Having thus

Digitized by Google

disposed of the stearine, or what is called the first product, he proceeds with the elaine or oil expressed from it, and which he calls the second product, as follows: that is to say, he purifies it by an admixture, according to the degree of its apparent foulness, of from 1 to 2 per cent. by weight of the sulphuric acid of commerce, of about 1·80 specific gravity, diluted with six times its weight of water. The whole is then to be violently agitated by mechanical means, and he prefers for this purpose the use of a vessel constructed on the principle of a common barrel churn. When sufficiently agitated, it will have a dirty whitish appearance, and is then to be drawn off into another vessel, in which it is to be allowed to settle, and any scum that rises is to be carefully taken off. In a day or two the impurities will be deposited at the bottom of the oil, which will then become clear, or nearly so, and it is to be filtered through a thick woollen cloth, after which it will be fit for burning in ordinary lamps and for other uses.

The process of separating the elaine from the stearine, by pressure, in manner aforesaid, had never before been applied to the substance called cocoa-nut oil, and consequently no product had heretofore been obtained thereby from that substance fit for being manufactured into candles in the ordinary way, or for being refined by any of the usual modes, so as to burn in ordinary lamps, both which objects are attained by this method of preparing or manufacturing the said substance.

Candles well made from the above material are a very superior article. The light produced is more brilliant than from the same sized candle made of tallow; the flame is perfectly colourless, and the wick remains free from cinder, or any degree of foulness during combustion. Our *imports* of Cocoa-nut oil in 1863 were 320,180 cwts., valued at 753,321*l.*; and in 1864, 375,218 cwts., valued at 716,175*l.* See CANDLES. ELAINE. STEARINE.

COD. A fish belonging to the family of *Gadidæ*.

In 1854 it was calculated that the take in Scotland of cod and ling amounted to 3,523,269 individuals, of which 1,385,699 were from the Shetland Islands. 109,684 cod were cured dried, and 6,166 barrels were cured in pickle; whilst 58,042 cod were disposed of fresh, making a total of 167,726 cod cured or fresh, of which large quantity 19,557 cod were exported. In 1852 no less than 102,659 tons of American shipping were employed in this branch of trade, and the aggregate value of fish exported in the same year amounted to 453,610 dollars.

COD-LIVER OIL. The oil obtained from the livers of several varieties of the *Gadidæ* family; especially from the torsk, *Brosmius brosme*. It is administered medicinally: it acts mainly as a nutritive body, and the old idea that its medicinal value depended on the iodine it contained is now proved to be false, since it holds no iodine in composition. Since the demand for cod-liver oil has been large, it has been extensively adulterated with other fish oils. Of cod-liver oil in 1863 we *imported* 590 tons, valued at 59,071*l.*; and in 1864, 545 tons, valued at 70,940*l.*

CODEINE $C^{36}H^{21}NO^6 + 2$ Aq. An alkaloid contained in the mother liquid of morphine.

CODILLA OF FLAX. The coarsest parts of the fibre sorted out by itself. See FLAX.

CŒLESTIN. Native sulphate of strontium. It occurs abundantly in the massive form at Montmartre, and near Bristol. See STRONTIUM.

CŒRULEUM. A mineral paint of a light blue colour, with a tint of green, used by artists for painting both in oil and water colours.

COFFEE (*Café*, Fr.; *Kaffee*, Germ.) The coffee is the seed of a tree of the family *rubiaceæ*, and belongs to the *Pentandria monogynia* of Linnæus. There are several species of the genus, but the only one cultivated is the *Coffæa Arabica*, a native of Upper Ethiopia and Arabia Felix. It rises to the height of 15 or 20 feet; its trunk sends forth opposite branches in pairs above and at right angles to each other; the leaves resemble those of the common laurel, although not so dry and thick. From the angle of the leaf-stalks small groups of white flowers issue, which are like those of the Spanish jasmine. These flowers fade very soon, and are replaced by a kind of fruit not unlike a cherry, which contains a yellow glairy fluid, enveloping two small seeds or berries convex upon one side, flat and furrowed upon the other in the direction of the long axis. These seeds are of a horny or cartilaginous nature; they are glued together, each being surrounded with a peculiar coriaceous membrane. They constitute the coffee of commerce.

It was not till towards the end of the 15th century that the coffee tree began to be cultivated in Arabia. Historians usually ascribe the discovery of the use of coffee as a beverage to the superior of a monastery there, who, desirous of preventing the monks from sleeping at their nocturnal services, made them drink the infusion of coffee upon the report of shepherds, who pretended that their flocks were more lively after browsing on the fruit of that plant. The use of coffee was soon rapidly spread,

Digitized by Google

but it encountered much opposition on the part of the Turkish government, and became the occasion of public assemblies. Under the reign of Amurath III. the mufti procured a law to shut all the coffee-houses, and this act of suppression was renewed under the minority of Mahomet IV. It was not till 1554, under Solyman the Great, that the drinking of coffee was accredited in Constantinople; and a century elapsed before it was known in London and Paris. Solyman Aga introduced its use into the latter city in 1669, and in 1672 an Armenian established the first *café* at the fair of Saint Germain.

When coffee became somewhat of a necessary of life from the influence of habit among the people, all the European powers who had colonies between the tropics projected to form plantations of coffee trees in them. The Dutch were the first who transported the coffee plant from Moka to Batavia, and from Batavia to Amsterdam. In 1714 the magistrates of that city sent a root to Louis XIV. which he caused to be planted in the Jardin du Roi. This became the parent stock of all the French coffee plantations in Martinique.

The most extensive culture of coffee is still in Arabia Felix, and principally in the kingdom of Yemen, towards the cantons of Aden and Mocha. Although these countries are very hot in the plains, they possess mountains where the air is mild. The coffee is generally grown half-way up on their slopes. When cultivated on the lower grounds it is always surrounded by large trees, which shelter it from the torrid sun, and prevent its fruit from withering before their maturity. The harvest is gathered at three periods: the most considerable occurs in May, when the reapers begin by spreading cloths under the trees, then shaking the branches strongly, so as to make the fruit drop, which they collect, and expose upon mats to dry. They then pass over the dried berries a very heavy roller, to break the envelopes, which are afterwards winnowed away with a fan. The interior bean is again dried before being laid up in store.

In Demerara, Berbice, and some of our West India islands, where much good coffee is now raised, a different mode of treating the pulpy fruit and curing the beans is adopted. When the cherry-looking berry has assumed a deep-red colour, it is gathered, and immediately subjected to the operations of a mill composed of two wooden rollers, furnished with iron plates, which revolve near a third fixed roller called the *chops*. The berries are fed into a hopper above the rollers, and falling down between them and the chops, they are stripped of their outer skins and pulp, while the twin beans are separated from each other. These beans then fall upon a sieve, which allows the skin and the pulp to pass through, while the hard beans accumulate and are progressively slid over the edge into baskets. They are next steeped for a night in water, thoroughly washed in the morning, and afterwards dried in the sun. They are now ready for the peeling mill, a wooden edge wheel turned vertically by a horse yoked to the extremity of its horizontal axis. In travelling over the coffee, it bursts and detaches the coriaceous or parchment-like skin which surrounds each hemispherical bean. It is then freed from the membranes by a winnowing machine, in which four pieces of tin made fast to an axle are caused to revolve with great velocity. Corn fanners would answer better than this rude instrument of negro invention. The coffee is finally spread upon mats or tables, picked clean, and packed up for shipment.

The most highly esteemed coffee is that of Mocha. It has a smaller and a rounder bean; a more agreeable taste and smell than any other. Its colour is yellow. Next to it in European reputation is the Martinique and Bourbon coffees; the former is larger than the Arabian and more oblong; it is rounded at the ends; its colour is greenish, and it preserves almost always a silver gray pellicle, which comes off in the roasting.

The Bourbon coffee approaches nearest to the Mocha, from which it originally sprung. The Saint Domingo coffee has its two extremities pointed, and is much less esteemed than the preceding.

The coffee tree flourishes in hilly districts where its root can be kept dry, while its leaves are refreshed with frequent showers. Rocky ground, with rich decomposed mould in the fissures, agrees best with it. Though it would grow, as we have said, to the height of 15 or 20 feet, yet it is usually kept down by pruning to that of 5 feet for increasing the production of the fruit, as well as for the convenience of cropping. It begins to yield fruit the third year, but is not in full bearing till the fifth, does not thrive beyond the twenty-fifth, and is useless in general at the thirtieth. In the coffee husbandry the plants should be placed 8 feet apart, as the trees throw out extensive horizontal branches, and in holes 10 or 12 feet deep to secure a constant supply of moisture.

Coffee has been analysed by a great many chemists, with considerable diversity of results. The best analysis perhaps is that of Schrader. He found that the raw beans distilled with water in a retort communicated to it their flavour and rendered it turbid, whence they seem to contain some volatile oil. On reboiling the beans, filtering, and evaporating the liquor to a syrup, adding a little alcohol till no more matter was pre-

Digitized by Google

cipitated, and then evaporating to dryness, he obtained 17·58 per cent. of a yellowish-brown transparent extract, which constitutes the characteristic part of coffee, though it is not in that state the pure proximate principle, called *caffeine*. Its most remarkable reaction is its producing, with both the protoxide and the peroxide salts of iron, a fine grass green colour, while a dark green precipitate falls, which re-dissolves when an acid is poured into the liquor. It produces on the solution of the salts of copper scarcely any effect, till an alkali be added, when a very beautiful green colour is produced which may be employed in painting. Coffee beans contain also a resin, and a fatty substance somewhat like suet. According to Robiquet, ether extracts from coffee beans nearly 10 per cent. of resin and fat, but he probably exaggerates the amount. The peculiar substance caffeine contained in the above extract is crystallisable. It is remarkable in regard to composition, that after urea and the uric acid, it is among organic products the richest in azote. It was dissolved and described in 1820 by Rungé. It does not possess alkaline properties. Pfaff obtained only 90 grains of caffeine from six pounds of coffee beans. There is also an acid in raw coffee to which the name of *caffeic acid* has been given. When distilled to dryness and decomposed, it has the smell of roasted coffee. See CAFFEINE.

Coffee undergoes important changes in the process of roasting. When it is roasted to a yellowish brown it loses, according to Cadet, 12½ per cent. of its weight, and is in this state difficult to grind. When roasted to a chestnut brown it loses 18 per cent.; and when it becomes entirely black, though not at all carbonised, it has lost 23 per cent. Schrader has analysed roasted coffee comparatively with raw coffee, and he found in the first 12½ per cent. of an extract of coffee soluble in water and alcohol, which possesses nearly the properties of the extract of the raw coffee, although it has a deeper brown colour, and softens more readily in the air. He found also 10·4 of a blackish brown gum; 5·7 of an oxygenated extract, or rather *apothème* soluble in alcohol, insoluble in water; 2 of a fatty substance and resin; 69 of burnt vegetable fibre, insoluble. On distilling roasted coffee with water, Schrader obtained a product which contained the aromatic principle of coffee; it reddened litmus paper, and exhaled a strong and agreeable odour of roasted coffee. If we roast coffee in a retort, the first portions of the aromatic principle of coffee condense into a yellow liquid in the receiver; and these may be added to the coffee roasted in the common way, from which this matter has been expelled and dissipated in the air.

Chenevix affirmed that by the roasting of coffee a certain quantity of tannin possessing the property of precipitating gelatine is generated. Cadet made the same observation, and found, moreover, that the tannin was most abundant in the lightly roasted coffee, and that there was nearly none of it in coffee highly roasted. Payssé and Schrader, on the contrary, state that solution of gelatine does not precipitate either the decoction of roasted coffee or the alcoholic extract of this coffee. Rungé likewise asserts that he could obtain no precipitate with gelatine; but he says that albumen precipitates from the decoction of roasted coffee the same kind of tannin as is precipitated from raw coffee by the acetate of lead, and set free from the lead by sulphuretted hydrogen. With these results my own experiments agree. Gelatine certainly does not disturb clear infusion of roasted coffee, but the salts of iron blacken it.

Schrader endeavoured to roast separately the different principles of coffee, but none of them exhaled the aromatic odour of roasted coffee except the horny fibrous matter. He therefore concludes that this substance contributes mainly to the characteristic taste of roasted coffee, which cannot be imitated by any other vegetable matter, and which, as we have seen, should be ascribed chiefly to the altered caffeic acid. According to Garot, we may extract the caffeine without alteration from roasted coffee by precipitating its decoction by subacetate of lead, treating the washed precipitate with sulphuretted hydrogen, and evaporating the liquid product to dryness.

To roast coffee rightly we should keep in view the proper objects of this process, which are to develop its aroma, and destroy its toughness, so that it may be readily ground to powder. Too much heat destroys those principles which we should wish to preserve, and substitutes new ones which have nothing in common with the first, but add a disagreeable empyreumatic taste and smell. If, on the other hand, the rawness or greenness is not removed by an adequate heat, it masks the flavour of the bean, and injures the beverage made with it. When well roasted in the sheet iron cylinder set to revolve over a fire, it should have a uniform chocolate colour, a point readily hit by experienced roasters, who now manage the business very well for the principal coffee dealers both of London and Paris, so far as my judgment can determine. The development of the proper aroma is a criterion by which coffee roasters frequently regulate their operations. When it loses more than 20 per cent. of its weight, coffee is sure to be injured. It should never be ground till immediately before infusion.

Liebig's views of the process of nutrition have given fresh interest to every analysis

Digitized by Google

of articles of food. A watery infusion of coffee is used in almost every country as a beverage, and yet it is uncertain whether it is an article of nutrition or merely a condiment. A minute examination of the raw seed, or coffee bean as it is called, must precede the determination of that disputed point. Caffeine is the principle best known, being most easily separated from the other substances, resisting most powerfully chemical reagents, and by assuming a crystalline state is discoverable in very small quantities.

The constituents of coffee are: 1. *Vegetable fibrine*, which is the largest constituent, being an elastic horny substance, in which the other substances are incorporated. If we dry the beans at the heat of boiling water for several weeks we can easily reduce them to a fine powder, and by washing with ether, and then boiling in alcohol and water, we extract the soluble matter from the fibrine, which may then be boiled with weak solution of potash, and afterwards weak muriatic acid, as long as any matter is taken up. The purification being completed by boiling in water, the fibrine remains; and when rubbed in a mortar resembles starch; when roasted it gives out the odour nearly of wood.

2. *Fatty matter:* the beans digested in ether give out a yellow-coloured matter, which on evaporation becomes buttery, with an odour of raw coffee, and amounts to 10 per cent. of the beans.

3. *Caffeine:* the ethereal solution contains caffeine, which may be removed by shaking with a solution of water.

4. *Legumine:* in addition to an *acid* which agrees in its properties with the acid found in oak and cinchona, we find in the coffee beans legumine similar to that of beans. This legumine contains sulphur, which is the cause of their blackening a silver vessel in which the beans may be boiled with an alkali. Legumine and caffeine are the only nitrogenous constituents of coffee beans, consequently the only substances which could be nutritious, but they are not soluble in hot water as they exist in roasted coffee, and therefore it may be reckoned merely an exhilarating beverage.

Roasted coffee affords a much richer infusion to hot water containing a minute quantity of corbonate of soda, and improves the quality of the coffee on the stomach, by neutralising the caffeic acids.

Coffee, as sold in the shops in its roasted and ground state, is often adulterated with a variety of substances, but chiefly with chicory.—See CHICORY.

If tannin exists in roasted coffee, as maintained long ago by Chenevix, and generally admitted since, it must be very different from the tannin present in tea, catechu, kino, oak-bark, willow-bark, and other astringent vegetables; for it is not, like them, precipitated by either gelatine, albumen, or sulphate of quinine. With regard to the action upon the animal economy of coffee, tea, and cocoa, which contain one common chemical principle called caffeine or theine, Liebig has lately advanced some ingenious views, and has, in particular, endeavoured to show that, to persons of sedentary habits in the present refined state of society, they afford eminently useful beverages, which contribute to the formation of the characteristic principle of *bile*. This important secreted fluid, deemed by Liebig to be subservient to the function of respiration, requires for its formation much azotised matter, and *that* in a state of combination analogous to what exists in caffeine. The quantity of this principle in tea and coffee being only from 2 to 5 per cent., might lead one to suppose that it could have little effect upon the system even of regular drinkers of their infusions; but if the bile contains only one-tenth of solid matter, called choleic acid, which contains less than 4 per cent. of azote, then it may be shown that 3 grains of caffeine would impart to 500 grains of bile the azote which occurs in that crystalline precipitate of bile called *taurine*, which is thrown down from it by mineral acids.

546

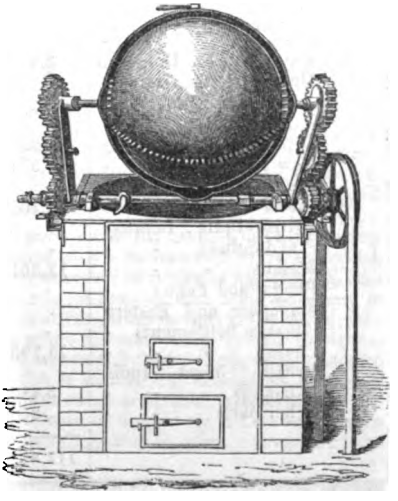

One atom of caffeine, 9 atoms of oxygen, and 9 of water, being added together,

Digitized by Google

produce the composition of 2 atoms of taurine. Now this is a very simple combination for the living organism to effect; one already paralleled in the generation of hippuric acid in urine, by the introduction of benzoic acid into the stomach; a physiological discovery which promised to lead to a more successful treatment of some of the most formidable diseases of man, particularly gout and gravel.

Coffee Roasting and Grinding. The gratefulness of the beverage afforded by this seed depends upon many circumstances, which are seldom all combined. It may be ruined in the roasting; for if some berries be under and some over done, the whole when ground will yield an unpalatable infusion. The due point to which the torrefaction should be carried may be determined partly by the colour and partly by the loss of weight, which points, however, are different for each sort of coffee. But perfect equality of ustulation is difficult of attainment with the ordinary cylindrical machines. Messrs. Law, of London and Edinburgh, had long been dissatisfied with the partial manner in which the cylinder performed its duty, as it generally left some part of its contents black, some dark brown, and others paler; results which greatly injure the flavour of the beverage made with the coffee. Mr. William Law overcame these difficulties by his invention of the globular roaster, actuated by a compound motion like that of our earth. This roaster, with its double rotary motion, is heated not over an open fire but in an atmosphere of hot air, through a cast metal casing. The globe is so mounted as to revolve horizontally, and also from time to time vertically, whereby the included beans are tossed about and intermingled in all directions, and inequality of torrefaction is scarcely possible. The position of the globe in *fig.* 546 shows it as turned up by a powerful leverage out of the cast iron heater, preparatory to its being emptied and re-charged.

Messrs. Dakin and Co. have patented, and have now for some years used, another kind of apparatus, which consists mainly of steam-chests upon the upper surface of which the coffee is roasted. The advantages of this arrangement appear to be that the coffee berries are spread over the heated surface in a thin layer, and thus every berry is equally exposed to the regulated action of the steam heat. The whole being exposed to view, it can be seen when the roasting has been carried to its proper point.

The value of our imports of coffee will be seen by the following table:—

	1863		1864	
	lbs.	Computed real value.	lbs.	Computed real value.
From Egypt	131,366	£5,072		
Philippine Islands	636,646	18,693		
Portugal	383,719	12,908	278,306	£8,917
Hayti and St. Domingo	3,469,929	103,918	952,987	27,472
United States: North Atlantic Ports	- -	- -	3,592,422	109,610
Ports on the Pacific	- -	- -	31	1
Central America	3,239,149	114,050	3,701,300	119,879
New Granada	1,574,439	46,703	997,352	27,403
Venezuela	- -	- -	291,787	8,093
Brazil	9,409,720	290,456	8,959,025	263,691
British India: Bombay and Scinde	- -	- -	3,149,967	96,231
Madras	12,361,096	444,225	13,864,486	439,298
Bengal and Pegu	- -	- -	117,167	3,729
Singapore and Eastern Straits Settlements	- -	- -	1,253,020	32,215
Ceylon	79,793,201	2,898,086	69,011,290	2,370,129
British West India Islands	5,486,262	192,121	2,469,488	79,538
Other parts	868,690	29,098	668,754	20,030
	117,354,217	4,155,330	109,277,382	3,606,236

COGNAC. The finest kind of French brandy, distilled from wine—so called from the town of Cognac, in the department of Charente. See Brandy.

COIR. The outer coating of the cocoa-nut, often weighing one or two pounds, when stripped off longitudinally, furnishes the fibres called by the native name of *Coir*, and used for small cables and rigging.

In England these fibres are used in matting and for coarse brush work. In Price

Digitized by Google

and Co.'s works they are advantageously employed, placed between iron traysand on the surface of the cocoa-nut and other concrete oils and fats, and subjected to great pressure ; the liquid oil flows out, leaving solid fats behind. From the abundance, cheapness, and durability of this substance it is likely to come into more general use, and it is even now very seriously proposed as a material for constructing ocean telegraphs, from its lightness and power of resisting sea-water. The qualities of coir for many purposes have been established for ages in the East Indies. Dr. Gilchrist thus describes the properties of coir ropes:—"They are particularly elastic and buoyant, floating on the surface of the sea; therefore when, owing to the strength of the current, a boat misses a ship, it is usual to veer out a quantity of coir, having previously fastened an oar, or small cask, &c., to its end. Thus the boat may be easily enabled to haul up to the ship's stern. Were a coir hawser," he adds, "kept on board every ship in the British marine, how many lives would probably be saved?"

It is stated that fresh water rots coir in a very short time, corroding it in a surprising degree, whereas salt water absolutely strengthens it, seeming to increase the elasticity. Coir is therefore unfit for running rigging, especially for vessels subject to low latitudes, it being easily snapped in frosty weather.

Nothing can equal the ease with which a ship rides at anchor, when her cables are of coir. As the surges approach the bows, the vessel gradually recedes in consequence of the cable yielding to their force; but as soon as they have passed, it contracts again, drawing the vessel gradually back to her first position: the lightness of the material adds to this effect, for the cable would float if the anchor did not keep it down. At the present time the forces exerted upon cables and the angles assumed under different circumstances, in paying out submarine telegraphic cables, have been the subject of practical attention and theoretical investigation. Some of the greatest authorities have assumed that the forces exerted, between the bottom of the sea and the ship's stern, had reference only to forms or waves of the cables, representing some curve between the vertical and horizontal line, but always concave to the water surface. For a curve to exist, in the opposite direction, was named only as a condition, without evidence of any practical kind to show that it really existed, or called for any attention to investigate it. So long since, however, as 1825, Dr. Gilchrist, among others, had described this very opposite curve of the coir; viz.—of being, when in action as a cable, curved with a concave surface toward the bottom of the sea; a fact well known to the experienced sailors of England, as well as to the natives who employ these coir cables so extensively on the East Indian coast.

"A hempen cable always makes a curve *downwards*, between the vessel and the anchor, but a coir cable makes the curve *upwards*. Therefore, if a right line were drawn from the hawse-hole to the ring of the anchor, it would be something like the axis of a parabolic spindle, of which the cables would form, or nearly so, the two elliptic segments."

In the employment of materials for ocean telegraphs, especially for deep sea purposes, the use of iron and the proposal for using coir and other light substances, have caused the telegraphic means to be spoken of as "heavy" or "light" cables. Dr. Allan, of Edinburgh, proposes the abundant use of coir to make a *light cable*, say, half the weight of the lightest hitherto made, the Atlantic cable. He states that a deep sea cable may be compounded to weigh not more than 10 cwt. per mile: while the cheapness, durability in salt water, lightness, and abundant supply, will give it advantages over gutta percha and other substances used to form the bulk of the lightest cables hitherto employed.

When cocoa-nuts are sawed into two equal parts across the grain of the coir coating, they form excellent table brushes, causing wood planks to assume a very high polish by friction. If the shell should be left, the edges should be perfectly smooth, and then they will not scratch. It is a good mode to strip off the coir, and, after soaking it in water, to beat it with a heavy wooden mall until the pieces become pliant, when they should be firmly bound together with an iron ring; the ends being levelled, the implement is fit for use; a little bees' wax, rubbed occasionally upon them, adds greatly to the lustre of the furniture; of course the polish is mainly due to strength and rapid action producing the friction upon the wood, and other articles of furniture.

In India, the coarse bark of the nuts is extensively used to cleanse houses, and in washing the decks of vessels. Coarse stuff, matting, and bagging, are made of the fibres, as well as ropes, sails, and cables.

The general preparation is simple; the fibrous husks or coats which envelope the cocoa-nuts, after being for some time soaked in water, become soft; they are then beaten, to separate other substances with which they are mixed, which fall away like saw-dust, the strings or fibres being left; this is spun into long yarns, woven into sail-cloth, and twisted into cables, even for large vessels. Cordage thus made is con-

Digitized by Google

sidered preferable, in many respects, to that brought from Europe, especially the advantage of floating in water.

We imported of coir in its natural and its manufactured state, as follows :—

	1863		1864	
	Tons.	Computed real value.	Tons.	Computed real value.
Fibre.				
From India, Singapore and Ceylon -	485	£13,948	498	£12,882
Other parts - - - - -	8	448	43	1,597
	493	14,396	541	14,479
Cordage and Cable.	Cwts.		Cwts.	
From India, Singapore, Bombay, and Scinde - - - -	10,185	£13,813	1,262	£1,536
Madras - - - - - -	- -	- -	3,262	4,148
Ceylon - - - - - -	- -	- -	1,082	1,407
Other parts - - - -	474	639	1,076	1,434
	10,659	14,452	6,682	8,525
Cable Yarn.				
From British India, Singapore, Bombay, and Scinde - - -	- -	- -	32,387	41,698
Madras - - - - - -	- -	- -	35,003	46,002
Bengal and Pegu - - -	- -	- -	226	311
Ceylon - - - - -	97,313	133,552	31,566	41,201
Other parts - - - -	669	909	1,554	1,996
	97,982	134,461	100,738	131,208

COKE. (Eng. and Fr.; *Abgeschwefelte*, Germ.) It is necessary to distinguish between what is called gas-coke and oven-coke. The word coke applies, properly, to the latter alone; for in a manufacturing sense, the former is merely cinder. The production of good coke requires a combination of qualities in coal not very frequently met with; and hence first-rate coking coals can be procured only from certain districts. The essential requisites are, first, the presence of very little earthy or incombustible ash; and, secondly, the more or less infusibility of that ash. The presence of any of the salts of lime is above all objectionable; after which may be classed silica and alumina; for the whole of these have a strong tendency to produce a vitrification, or slag, upon the bars of the furnace in which the coke is burnt; and in this way the bars are speedily corroded or burnt out; whilst the resulting clinker impedes or destroys the draught, by fusing over the interstices of the bars or air passages. Iron pyrites is a common obstacle to the coke maker: but it is found in practice, that a protracted application of heat in the oven dissipates the whole of the sulphur from the iron, with the production of bisulphuret of carbon and metallic carburet of iron, the latter of which alone remains in the coke, and, unless silica be present, has no great disposition to vitrify after oxidation. Where the iron pyrites exists in large quantities it is separated by the coal washing machines, some of which will be described in a general article.—See WASHING MACHINES. One object, therefore, gained by the oven coke manufacturer over the gas maker, is the expulsion of the sulphuret of carbon, and consequent purification of the residuary coke, Another, and a still more important consequence of a long sustained and high heat is, the condensation and contraction of the coke into a smaller volume, which, therefore, permits the introduction of a much greater weight into the same space; an advantage of vast importance in blast furnaces, and above all, in locomotive engines, as the repeated introduction of fresh charges of coal fuel is thus prevented. Part of this condensation is due to the weight of the superincumbent mass of coal thrown into the coke oven, by which (when the coal first begins to cake or fuse together) the particles are forced towards each other, and the caver-

Digitized by Google

nous character of cinder got rid of: but the chief contraction arises, as we have said, from the natural quality of carbon, which, like alumina, goes on contracting, the longer and higher the heat to which it is exposed. Hence, good coke cannot be made in a short time, and that used in locomotive engines is commonly from 48 to 96, or even 120 hours in the process of manufacture.

The prospects of improvement in coke-making point rather to alterations in the oven than in the process. Formerly it was not thought possible to utilise the heat evolved by the gaseous constituents of the coal; but now, as an example of the incorrectness of this idea, it may be stated that at the Felling Chemical Works, 200 tons of salt per week are made by the waste heat alone, and it is also employed in partially heating the blast for one of the furnaces. There appears no valid reason why sets of coke ovens might not be so arranged as mutually to compensate for each other, and produce upon one particular flue a constant and uniform effect. Contrivances of this kind have been projected,—but hitherto, we may suppose, without uniform success, as many of our large coke makers still continue the old mode of working.

The following figure, 547. represents a *shachtofen*, or pit-kiln, for coking coals in Germany. *a* is the lining (*chemise*), made of fire bricks; the enclosing walls are built of the same material; *b*, *b*, is a cast-iron ring covered with a cast-iron plate *c*. The floor of the kiln is massive. The coals are introduced, and the coke taken out, through a hole in the side *d*; during the process it is bricked up, and closed with an iron door. In the surrounding walls are 4 horizontal rows of flues *e*, *e*, *e*, *e*, which are usually iron pipes; the lowest row is upon a level with the floor of the kiln; and the others are each respectively one foot and a half higher than the preceding. Near the top of the shaft there is an iron pipe *f*, of from 8 to 10 inches in diameter, which allows the incoercible vapours generated in the coking to escape into the condenser, which consists either of wood or brick chambers. For kindling the coal, a layer of wood is first placed on the bottom of the kiln.

547

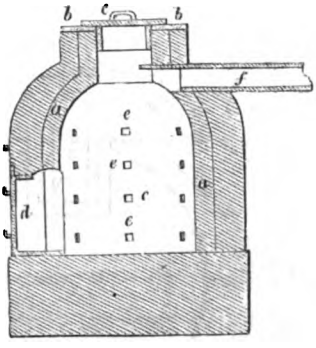

The coking of small coal is performed upon vaulted hearths, somewhat like bakers' ovens, but with still flatter roofs. Of such kilns, several are placed alongside one another, each being an ellipse deviating little from a circle, so that the mouth may project but a small space. The dimensions are such, that from 10 to 12 cubic feet of coal-culm may be spread in a layer 6 inches deep upon the sole of the furnace. The top of the flat arch of fire brick should be covered with a stratum of loam and sand.

Figs. 548 and 549 represent such a kiln as is mounted at Zabrze, in Upper Silesia, for coking small coal. *Fig.* 548 is the ground plan; *fig.* 549 the vertical section in the line of the long axis of *fig.* 548. *a*, is the sand-bed of the hearth, under the brick sole; *b*, is the roof of large fire-bricks; *c*, the covering of loam; *d*, the top surface of sand; *e*, the orifice in the front wall, for admission of the culm, and removal of the coke, over the sloping stone *f*. The flame and vapours pass off above this orifice, through the chimney marked *g*, or through the aperture *h*, into a lateral chimney. *i*, is a bar of iron laid across the front of the door, as a fulcrum to work the iron rake upon. A layer of coals is first kindled upon the hearth, and when this is in brisk ignition, it is covered with the culm in successive sprinklings. When the coal is sufficiently coked, it is raked out, and quenched with water.

548

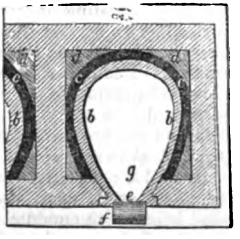

549

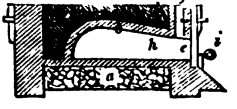

Fig. 550 represents a simple *coking meiler*, or *mound*, constructed in a circular form round a central chimney of loose bricks, towards which small horizontal flues are laid among the lumps of coals. The sides and top are covered with culm or slack, and the heap is kindled from certain openings towards the circumference. *Fig.* 551 represents an oblong *meiler*, sometimes made 100 or 150 feet in length, and from 10 to 12 in breadth. The section in the middle of the

Digitized by Google

figure shows how the lumps are piled up; the wooden stakes are lifted out when the heap is finished, in order to introduce kindlings at various points; and the rest of

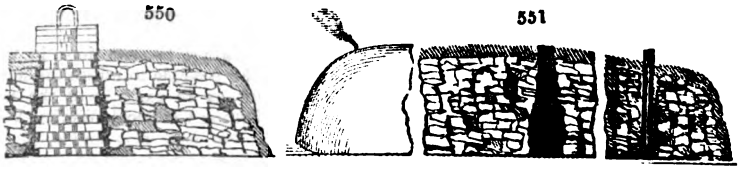

the meiler is then covered with slack and clay, to protect it from the rains. A jet of smoke and flame is seen issuing from its left end.

An excellent range of furnaces for making a superior article of coke, for the service of the locomotive engines of the London and Birmingham Railway Company, has been erected at the Camden Town station; consisting of 18 ovens in two lines, the whole discharging their products of combustion into a horizontal flue, which terminates in a chimney-stalk, 115 feet high. *Fig.* 552 is a ground plan of the ellip-

552

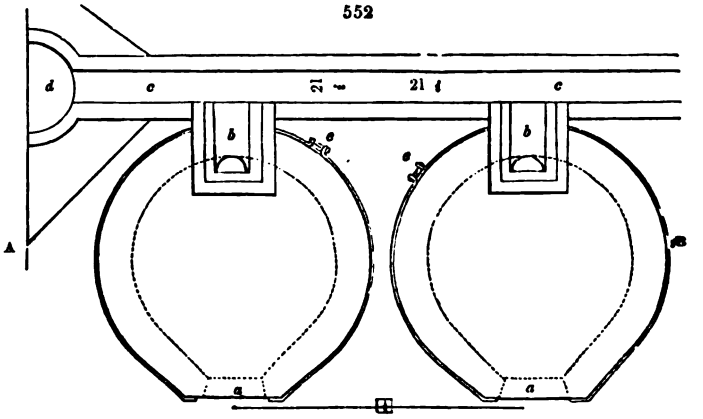

tical ovens, each being 12 feet by 11 internally, and having 3 feet thickness of walls. *a*, *a*, is the mouth, 3½ feet wide outside, and about 2¾ feet within. *b*, *b*, are the entrances into the flue; they may be shut more or less completely by horizontal slabs of fire-brick, resting on iron frames, pushed in from behind, to modify the draught of air. The grooves of these damper-slabs admit a small stream of air to complete the combustion of the volatilised particles of soot. By this means the smoke is well consumed. The flue *c*, *c*, is 2½ feet high, by 21 inches wide. The chimney *d*, at the level of the flue, is 11 feet in diameter inside, and 17 outside; being built from an elegant design of Robert Stephenson, Esq. *e*, *e*, are the keys of the iron hoops. which bind the brickwork of the oven. *Fig.* 553 is a vertical section in the line A, B, of *fig.* 552, showing, at *b*, *b*, and *e*, *e*, the entrances of the different ovens into the horizontal flue; the direction of the draught being indicated by the arrows. *f*, *f*, is a bed of concrete, upon which the whole furnace-range is built, the level of the ground being in the middle of that bed. *g*, is a stanchion on which the crane is mounted; *h* is a section of the chimney wall, with part of the interior to the left of the strong line. *Fig.* 554 is a front elevation of two of these elegant coke ovens; in which the bracing hoops *i*, *i*, *i*, are shown; *k*, *k*, are the cast-iron doors, strengthened outside with diagonal ridges; each door being 5½ feet high, by 4 feet wide, and lined internally with fire-bricks. They are raised and lowered by means of chains and counterweights, moved by the crane *l*.

Each alternate oven is charged, between 8 and 10 o'clock every morning, with 3½ tons of good coals. A wisp of straw is thrown in on the top of the heap, which takes fire by the radiation from the dome (which is in a state of dull ignition from the preceding operation), and inflames the smoke then rising from the surface, by the reaction of the hot sides and bottom upon the body of the fuel. In this way the smoke is consumed at the very commencement of the process, when it would other-

Digitized by Google

wise be most abundant. The coking process is in no respect a species of distillation, but a complete combustion of the volatile principles of the coal. The mass of coals is first kindled at the surface, where it is supplied with abundance of atmospheric oxygen; because the doors of the ovens in front, and the throat-vents behind, are then left open. The consequence is, that no more smoke is discharged from the top of the chimney, at this the most sooty period of the process, than is produced by an ordinary kitchen fire. In these circumstances, the coal gas, or other gas, supposed to be generated in the slightly heated mass beneath cannot escape combustion in passing up through the bright open flame of the oven. As the coking of the coal advances most slowly and regularly from the top of the heap to the bottom, only one layer is affected at a time, and in succession downwards, while the surface is always covered with a stratum of red hot cinders, ready to consume every particle of carburetted or sulphuretted hydrogen gases which may escape from below. The greatest mass, when calcined in this down-

553

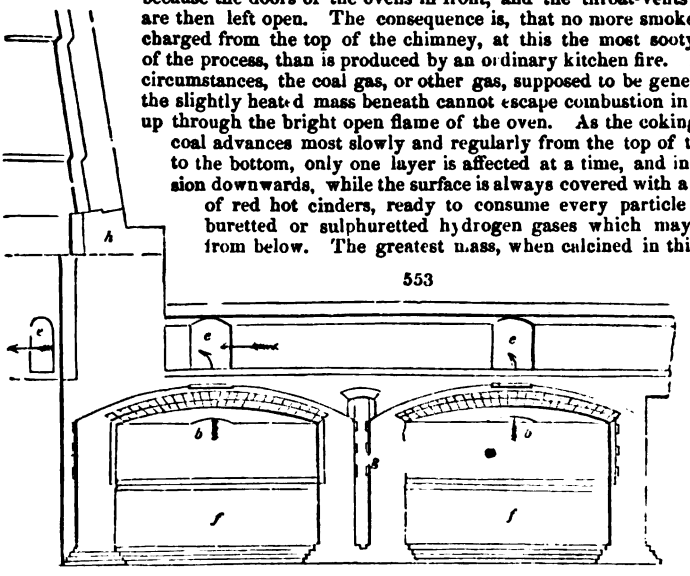

ward order, cannot emit into the atmosphere any more of the above-mentioned gases than the smallest heap.

The coke being perfectly freed from all fuliginous and volatile matters by a calcination of upwards of 40 hours, is cooled down to moderate ignition by sliding in the dampers, and sliding up the doors, which had been partially closed during the latter part of the process. It is now observed to form prismatic concretions, some-

554

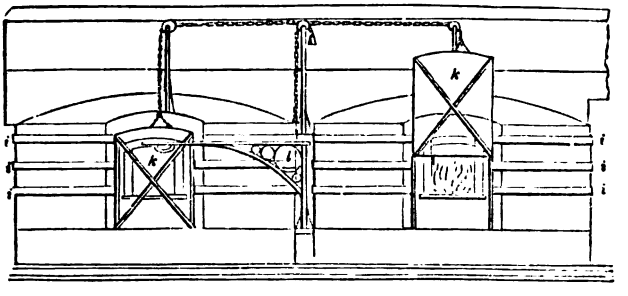

what like a columnar mass of basalt. These are loosened by iron bars, lifted out upon shovels furnished with long iron shanks, which are poised upon swing chains with hooked ends, and the lumps are thrown upon the pavement, to be extinguished by sprinkling water upon them from the rose of a watering can; or, they might be transferred into a large chest of sheet-iron set on wheels and then covered up. Good coals, thus treated, yield 80 per cent. of an excellent compact glistening coke; weighing about 14 cwt. per chaldron,

The loss of weight in coking in the ordinary ovens is usually reckoned at 25 per cent.; and coal, which thus loses one-fourth in weight, gains one-fourth in bulk.

Labourers who have been long employed at rightly-constructed coke ovens seem to enjoy remarkably good health.

Mr. Ebenezer Rogers, of Abercarn, in Monmouthshire, has lately introduced a new method of coking, which he thus describes.

Digitized by Google

"A short time ago a plan was mentioned to the writer as having been used in Westphalia, by which wood was charred in small kilns: as the form of kiln described was quite new to him, it led him to some reflection as to the principles on which it acted, which were found to be so simple and effective, that he determined to apply them on a large scale for coking coal. The result has been that in the course of a few months the original idea has been so satisfactorily matured and developed, that instead of coking 6 tons of coal in an oven costing £80, 150 tons of coal are now being coked at once in a kiln costing less than the former single oven.

"*Figs.* 555 and 556 are a side elevation and plan of one of the new coking kilns to a small scale; *Fig.* 557 is an enlarged transverse section.

555

556

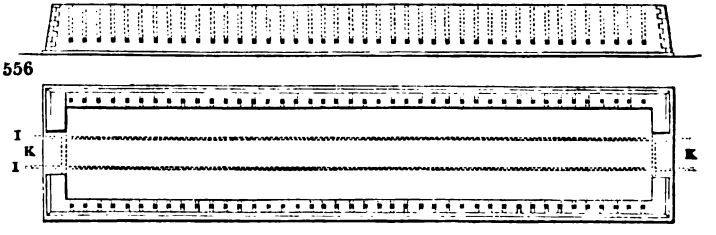

557

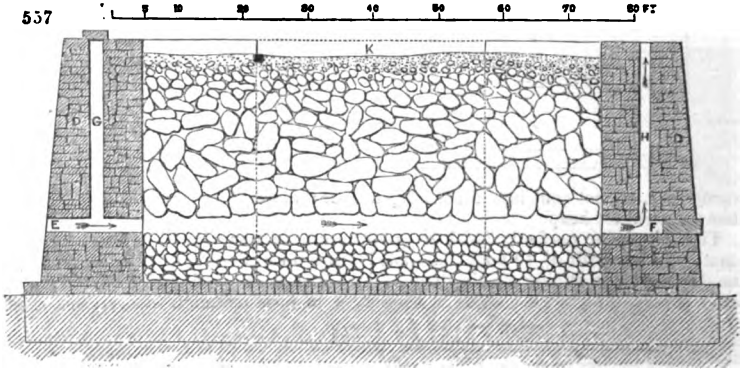

"D D are the walls of the kiln, which are provided with horizontal flues, E, F, which open into the side or bottom of the mass of coal. Connected with each of these flues are the vertical chimneys, G, H. The dotted lines I I, *fig.* 556, represent a movable railway, by which the coal may be brought into the kiln and the coke removed from it. In filling the kiln with coal, care is taken to preserve transverse passages or flues for the air and gases between the corresponding flues E F in the opposite walls. This is effected by building or constructing the passages at the time with the larger pieces of coal, or else by means of channels or flues permanently formed in the bed of the kiln. When the coal is of different sizes, it is also advantageous to let the size of the pieces diminish towards the top of the mass. The surface of the coal when filled in is covered with small coal, ashes and other suitable material.

"When the kiln is filled the openings K at the ends are built up with bricks, as shown dotted; the kiln is not covered by an arch, but left entirely open at the top The apertures of the flues F and the chimneys G are then closed, as shown in *fig.* 557, and the coal is ignited through the flues E; the air then enters the flues E and passes through the coal, and then ascends the chimneys H, as shown by the arrows. When the current of air has proceeded in this direction for some hours, the flues E and chimneys H are closed, and F and G are opened, which reverses the direction of the current of air through the mass. This alternation of the current is repeated as often as may be required. At the same time air descends through the upper surface of the mass of coal. When the mass is well ignited, which takes place in from 24 to 36 hours, the external apertures of the flues E and F are closed, and the chimneys G and H opened: the air now enters through the upper surface of the coal only, and descends through the mass of the coal, the products of combustion passing up the chimneys.

"The coking gradually ascends from the bottom of the mass to the top, and can be

Digitized by Google

easily regulated or equalised by opening or closing wholly or partially the apertures of the flues or chimneys. The top surface of the coal being kept cool by the descending current of air, the workman is enabled to walk over it during the operation; he inserts from time to time at different parts of the surface an iron bar, which is easily pushed down until it reaches the mass of coke, by which its further descent is prevented. In this way the workman gauges the depth at which the coking process is taking place, and if he finds it to have progressed higher at one part than at another, he closes the chimneys communicating with that part, and thus retards the process there, This gauging of the surface is carried on without difficulty until the coking process has arrived close to the top. The gases and tarry vapours produced by the distillation or combustion descend through the interstices of the incandescent mass below, and there deposit a portion of the carbon contained in them, the residual gases passing up the chimneys. The coke at the lower part of the kiln is effectually protected from the action of the air, by being surrounded and enveloped in the gases and vapours which descend through it and are non-supporters of combustion.

"When the mass of coal has been coked up to the top, which takes place in about seven days, it is quenched with water, the walls closing the end openings K, are taken down, and the coke is removed. When a portion has been removed, a movable railway is laid in the kiln, so as to facilitate the removal of the remainder of the coke.

"The flues E and F may enter at the bottom of the kiln, or at the sides above the bottom, as in *fig.* 557; in the latter case the space below, up to the level of the bottom of the flues, may be filled with small coal, which becomes coked by the radiated heat from the incandescent mass above. The transverse passages through the mass are then constructed upon this bed of small coal with the larger lumps of coal, as before mentioned. The flues and chimneys need not necessarily be horizontal and vertical; and instead of connecting a separate chimney with each transverse flue, flues may be constructed longitudinally in the walls of the kiln, so as to connect two or more of the transverse flues, which are then regulated by dampers, conveying the gaseous products from them into chimneys of any convenient height; the arrangement first described, however, and shown in the drawings, is preferred. The gaseous products may be collected, and tar and ammonia and other chemical compounds manufactured from them by the usual modes. The coking or charring of peat and wood may be effected in a similar manner to that already described with regard to coal.

"The new kilns have proved entirely successful; they are already in use at some of the largest iron works in the kingdom, and are being erected at a number of other works. The great saving in first cost of oven, economy in working and maintenance, increased yield, and improved quality of coke, will probably soon cause this mode of coking to supersede the others now in use. The kilns are most advantageously made about 14 feet in width, and 90 feet in length, and 7 feet 6 inches in height; this size of kiln contains about 150 tons of coal."

From the long experience of this gentleman we are induced to quote yet further from his memoir.

"The process of coking converts the coal into a porous mass; but this is done during the melting of the coal, at which moment the gases in liberating themselves form very minute bubbles; but the practical result is the same as in wood coal, allowing a large surface of carbon in a small space to be acted upon by the blast. As a general rule, coke made rapidly has larger pores and is lighter than coke made slowly; it accordingly bears less blast, and crumbles too easily in the furnace.

"The process of coking in the ordinary ovens may be thus explained. When the oven is filled with a proper charge, the coal is fired at the surface by the radiated heat from the roof; enough air is admitted to consume the gases given off by the coal, and thus a high temperature is maintained in the roof of the oven. The coal is by this means melted; and those portions of it which, under the influence of a high temperature, can of themselves form gaseous compounds, are now given off, forming at the moment of their liberation small bubbles or cells; the coke now left is quite safe from waste, unless a further supply of air is allowed to have access to it. At this stage of the process, the coke assumes a pentagonal or five-sided shape, and columnar structure. When the coke is left exposed to heat for some time after it is formed, it becomes harder and works better, from being less liable to crush in the furnace and decrepitate on exposure to the blast.

It has been often remarked as a strange fact, that the hotter the oven the better the yield of coke; hence all the arrangements of flues to keep up the temperature of the ovens. This fact is however the result of laws well known to chemists. When the coal is melted as above mentioned, the hydrogen in the coal takes up two atoms of carbon for each two atoms of hydrogen, forming bicarburetted hydrogen gas (C^2H^2); this at once escapes, but it has to pass upwards through the red hot coke above, which is at a higher temperature than the melted coal below. Now when bicarburetted

Digitized by Google

hydrogen gas is exposed to a bright red heat it is decomposed, forming carburetted hydrogen gas (CH^2), and depositing one atom, or one half of its carbon, in a solid form. Consequently in the process of coking, if the oven is in good working order and the coke hot enough, the liberated carbon is detained in its passage upwards, and either absorbed by the coke, or crystallised *per se* upon it. This is simply illustrated by passing ordinary illuminating gas through a tube heated to a bright red heat; the tube will soon become coated internally and ultimately filled with a carbonaceous deposit produced by the decomposition of the bicarburetted hydrogen contained in the gas.

"It is found that some coal which is too dry or not sufficiently bituminous to coke when put into the oven by itself in lumps, will coke perfectly if crushed small and well wetted with water and charged in this state. This fact, if followed out, would lead to an examination of the chemical nature of the effect produced by the water, and would point the way to further improvements."

"*Charred Coal*," as it is called, must be regarded as a species of coke. It has been largely employed in lieu of charcoal in the manufacture of tin plates. This preparation is also a discovery of Mr. Ebenezer Rogers, who thus describes its manufacture:

The preparation of the "charred coal" is simple. The coal is first reduced very small, and washed by any of the ordinary means; it is then spread over the bottom of a reverberatory furnace to a depth of about four inches; the bottom of the furnace is first raised to a red heat. When the small coal is thrown over the bottom a great volume of gases is given off, and much ebullition takes place: this ends in the production of a light spongy mass, which is turned over in the furnace and drawn in one hour and a half. To completely clear off the sulphur, water is now freely sprinkled over the mass until all smell of the sulphuretted hydrogen produced ceases. Charred coal has been hitherto produced on the floor of a coke oven, whilst red hot after drawing the charge of coke. See TIN PLATE MANUFACTURE.

A process has for some time been gaining ground in France known as the "*Système Appolt*," from its being introduced by two brothers of that name. The coking furnaces employed are vertical, and they are in compartments. The authors have published a description of their process and a statement of its results, "*Carbonisation de la Houille Système Appolt, décrit par les Auteurs, MM. Appolt Frères:*" Paris, 1858; to which we must refer our readers.

COKES. A name given to tin plates which have been prepared with coke.

COLCOTHAR OF VITRIOL (*Rouge d'Angleterre*, Fr.; *Rothes Eisenoxyd*, Germ.), the antiquated name of an oxide of iron. It is the brown-red peroxide of iron, produced by calcining sulphate of iron with a strong heat, levigating the resulting mass, and elutriating it into an impalpable powder. A better way of making it, so as to complete the separation of the acid, is to mix 100 parts of the green sulphate of iron with 42 of common salt, to calcine the mixture, wash away the resulting sulphate of soda, and levigate the residuum. The best sort of polishing powder, called *jeweller's rouge*, or plate powder, is the precipitated oxide of iron prepared by adding solution of soda to solution of copperas, washing, drying, and calcining the powder in shallow vessels with a gentle heat, till it assumes a deep brown-red colour.

COLD BLAST. See IRON and HOT BLAST.

COLLIDINE. $C^{16}H^{11}N$. A volatile base discovered by Anderson in bone oil, and subsequently found in shale naphtha.

COLLODION. M. Malgaigne communicated to the French Medical Journals some remarks on the preparation of gun cotton for surgical purposes. Several French chemists, at the suggestion of M. Malgaigne, attempted to make an ethereal solution of this compound by pursuing the process recommended by Mr. Maynard in the American Journal of Medical Science, but they failed in procuring the cotton in a state in which it could be dissolved in ether. It appears that these experimentalists had employed a mixture of nitric and sulphuric acids; but M. Miallie ascertained, after many trials, that the collodion in a state fitted for solution was much more easily procured by using a mixture of nitrate of potash and sulphuric acid.

For the information of our readers, we give here a description of M. Miallie's process for its preparation. It appears from the results obtained from this chemist, that cotton in its most explosive form is not the best fitted for making the ethereal solution:—

	Parts by weight.
Finely powdered nitrate of potash	40
Concentrated sulphuric acid	60
Carded cotton	2

Mix the nitrate with the sulphuric acid in a porcelain vessel, then add the cotton, and agitate the mass for three minutes by the aid of two glass rods. Wash the cotton, without first pressing it, in a large quantity of water, and when all acidity is removed (indicated by litmus paper), press it firmly in a cloth. Pull it out into a loose mass, and dry it in a stove at a moderate heat.

The compound thus obtained is not pure fulminating cotton; it always retains a

Digitized by Google

small quantity of sulphuric acid, is less inflammable than gun cotton, and it leaves a carbonaceous residue after explosion. It has, however, in a remarkable degree the property of solubility in ether, especially when mixed with a little alcohol, and it forms therewith a very adhesive solution, to which the name of collodion has been applied.

Preparation of Collodion.—Prepared cotton, 8 parts; rectified sulphuric ether, 125 parts; rectified alcohol, 8 parts: all by weight.

Put the cotton with the ether into a well-stopped bottle, and shake the mixture for some minutes. Then add the alcohol by degrees, and continue to shake until the whole of the liquid acquires a syrupy consistency. It may be then passed through a cloth, the residue strongly pressed, and the liquid kept in a well secured bottle.

Collodion thus prepared possesses remarkable adhesive properties. A piece of linen or cotton cloth covered with it, and made to adhere by evaporation to the palm of the hand, will support a weight of twenty or thirty pounds. Its adhesive power is so great that the cloth will commonly be torn before it gives way. The collodion cannot be regarded as a perfect solution of the cotton. It contains suspended and floating in it a quantity of vegetable fibre, which has escaped the solvent action of the ether. The liquid portion may be separated from these fibres by a filter, but it is doubtful whether this is an advantage. In the evaporation of the liquid these undissolved fibres, by felting with each other, appear to give a greater degree of tenacity and resistance to the dried mass.

Small balloons for holding gas are also made of collodion by pouring it into a glass globe, and turning it about, so that every part is covered with the fluid. As the ether evaporates, a thin film is left on the surface of the glass. To remove this, a glass tube is inserted into the neck of the flask, so that the collodion film may adhere; the air is sucked out, and the collapsed film is easily withdrawn.

For the application of collodion to photography, see PHOTOGRAPHY.

COLOCYNTH. *Citrullus Colocynthis.* The Coloquintida, bitter cucumber or bitter apple, a drastic medicine.

COLOMBA. *Cocculus palmatus.* A climbing shrub, a native of the intertropical regions of the earth. It is now cultivated in the Mauritius, and the Isle of Bourbon. The root is of a large, fleshy, deep-yellow colour, and divided into many irregular forks. These are cut off, sliced, strung on cords, and hung to dry in the shade.

COLOUR. In Physics, a property of light, producing peculiar impressions through the eye. Every surface, differing in its mechanical structure or chemical character, acts differently towards the light falling on it, and according to the amount of absorption, or reflection, or refraction, so is the colour of the ray. *White* is an entire reflection, and *black* a total absorption of all the rays, and consequently are not colours. The following table is by Mr. William Linton.

A Table of Oil Painters' Colours, with Notices of their Chemical and Artistical Properties.

	Colours.	Chemical Designation and Preparation.	Artistical Properties and Durability.	Additional Colours,—with Remarks.
WHITES.	*Flake White.*	Carbonate of Lead, with an excess of Oxide. Plates of lead, exposed to the action of vinegar-steam in beds of fermenting tan.	The best White extant for Oil or Resin vehicles when pure, which is generally ascertained by its exceeding whiteness and opacity. Its usual adulterations are Sulphate of Barytes, Chalk, Pipe clay, &c., all of which are partially transparent, and consequently appear darker in unctuous or resinous vehicles. It has no injurious action upon Vegetable and other colours, as some have conjectured. It is perfectly soluble in diluted Nitric or Acetic Acid when free from Pipe-clay or Sulphate of Barytes. It is blackened by the foul gases common to most domestic atmospheres, and is more secure in a rapidly drying and protective vehicle.	There are other Whites of Lead, varying in body and brilliancy, and equally obnoxious to the action of mephitic vapours; as *Krems*, *Roman*, and *Venetian Whites*, and *Sulphate of Lead*. The Whites of *Bismuth*, *Pearl*, and *Antimony* are injured by light as well as by mephitic vapours. Those of *Zinc*, *Tin*, and *Barytes*, although they are comparatively secure against the foul gases, are too feeble in body to be satisfactory in unctuous or resinous vehicles. Pattinson's Oxichloride of Lead, a denser preparation, forms an admirable substratum for works in which a powerful impasto is desired.

Digitized by Google

	Colours.	Chemical Designation and Preparation.	Artistical Properties and Durability.	Additional Colours,—with Remarks.
YELLOWS.	*Strontian Yellow.*	Chromate of Strontian. A Solution of Chloride of Strontian added to one of Chromate of Potash.	Of a pale Canary Colour. Resists the action of the foul gases and light, and is perfectly durable.	There are other Mineral Yellows, but they are all more or less objectionable. The *Chromates of Lead*, like all preparations of that metal, are blackened by the foul gases. The united oxides of Lead and Antimony furnish *Naples Yellow*, a colour readily affected by Sulphuretted Hydrogen and other foul gases, as well as by light, and by a moist steel spatula. *Turpith Mineral* or Subsulphate of Mercury is rapidly blackened by light, and by the foul airs. *Orpiment*, or *King's Yellow* (Arsenic and Sulphur), is equally destructible; also *Patent Yellow* (Lead and Salt heated violently). The Zinc Yellows, of which many have been published, are too deficient in body for oil. Chromate of Cadmium and Oxide of Uranium are feeble in body and seriously injured by mephitic airs, and Chromate of Mercury and Oxide of Cerium are destroyed by them. Madder Yellow, like Madder Red, is dissipated by light. Chromate of Barytes (Lemon Yellow) is too feeble in body in Oil. Massicot blackens with foul air; so do Chrome Yellow, and Chrome Orange, and Jaune Mineral, being preparations of lead. Besides the European Ochres, may be noticed a great variety, of almost every conceivable tint, of Red, Orange-yellow, and Purple,—from Hindostan, Canada, and Trinidad, which were in the Great Exhibition of 1851. They are perfectly durable. Palladium Yellow is better avoided, so is Golden Sulphuret of Antimony. Chromate of Tin darkens in oil, and Platinum Yellow is worthless. Gamboge (vegetable) bleaches in the light. Brown-pink, and others of the same class are also evanescent in their layers. The Vegetable Yellows are not to be depended upon. They soon disappear when applied in delicate tints or thin glazings, especially if subjected to the action of the solar rays.
	Cadmium Yellow.	Sulphuret of Cadmium. A combination of Cadmium and Sulphur.	A rich and brilliant Orange. Resists the action of the foul gases, light, &c., and is perfectly durable. A good substitute, like Strontian Yellow, for Naples, Chrome, and other changeable Mineral Yellows.	
	Yellow, Oxford, Roman, Stone, Brown, Sienna, with *Orange, Puce, Purple,* and other *Indian* and *American Ochres.*	Native Earths, consisting of Silica and Alumina, coloured by Oxide of Iron.	All permanent Colours, whether Native, Artificial, or Burnt. The Oxides of Iron are among the most staple colours of the palette. When properly washed and prepared for oil painting, they are incapable of injuring other colours, and may be said to constitute the soundest materials with which the chemistry of nature has furnished the painter for the imitation of her works.	
	Jaune de Mars.	A Chemical Preparation with similar properties.		
REDS.	*Light Red.*	Yellow Ochre, Burnt.	Sound, useful, and durable colours.	There are other Mineral Reds which are durable, but they are of inferior quality, and are not needed. *Native Cinnabar* is inferior in every respect to Vermilion. *Venetian Red* is an inferior representative of Indian Red, and *Colcothar* a still coarser one. *Red Lead* blackens in oil; and *Iodide of Mercury* has no claim to durability. *Red Precipitate* is worthless. *Phosphate of Cobalt* (a Pink Silicate) wants body, and darkens in oil. *Mineral Lake* (Tin and Chromium) is too feeble in body. *Lilac* and *Crimson Silicates*, from Gold, have not body enough for oil painting. Among Vegetable Reds, the *Madders* have the best reputation for standing. All vegetable colours, however, should be looked upon with suspicion when used in thin glazings.
	Indian Red.	A Native Iron Oxide.		
	Vermilion.	Bisulphuret of Mercury. Mercury and Sulphur combined.	A beautiful colour, and of an excellent body. Quite permanent, and not affected by acids or caustic alkalies. Vaporised by a red heat, if pure.	
	Madder Lakes.	Vegetable dyes on earthy bases.	Rich and beautiful colours.	
	Palladium Red.	Ammonio-perchloride of Palladium.	A rich, deep, and beautiful colour.	

Digitized by Google

	Colours.	Chemical Designation and Preparation.	Artistical Properties and Durability.	Additional Colours,—with Remarks.
BLUES.	*Ultramarine, Native.*	A compound of Silicate of Alumina and Silicate of Soda, with Sulphuret of Sodium: the colour is owing to the reaction of the latter on the two former constituents. The Native is prepared from Lapis lazuli.	A brilliant purplish-blue. None of the mephitic gases or light do it any injury. Acids will remove its colour. It is perfectly durable for the painter. The artificial preparation by Zuber, of Alsace (in the Great Exhibition of 1851), is of a less purple hue, and better fitted for the aërial tints of landscape.	There are other Mineral Blues, but they are better avoided. The Silicate of Cobalt and Potassa make Cobalt Blue; and the Oxide of Cobalt and Potassa make Smalt: both feeble pigments. Verditer and all the Copper Blues turn Green, and darken in oil. A Blue Frit, a Silicate of Copper (Alexandrian Blue), brought by Mr. Layard from Nineveh, which has retained its colour for probably 4000 years, turned black when mixed with oil. The permanence of Vitreous (called Silica) colours, when levigated for pigments, is a delusion. They are subject to all the changes and affinities of the substances which compose them. Prussian Blue is liable to change, Indigo fades in the light.
	Ultramarine, Artificial.			
GREENS.	*Chromium Green.*	Sesquioxide of Chromium. When Chromate of Mercury (the Orange precipitate on mixing Nitrate of Mercury and Chromate of Potash) is strongly ignited, Oxide of Chromium remains in a powder.	An opaque light Green, of a full body, and permanent in all respects. It is the colouring matter of emeralds.	There are other Mineral Greens. Those from the Artificial Ultramarine process, though durable, are wanting in body and richness. The Phosphates, Carbonates (Malachite), Disulphates, and Acetates of Copper, with Mineral, Verditer, and Verdigris Greens, are blackened by foul gases, and deoxidised or darkened by oil. Nickel Green also darkens and blackens in oil. Scheele's Green (Vert Métis), Arsenite of Copper, darkens in oil and foul air. Zinc or Cobalt Green (Rinman's Green) is permanent, but inferior in body and colour to the Green of Chromium.
	Terre Verte.	Silicate of Protoxide of Iron, with Water, Potassa, and Magnesia. A Native Mineral.	A delicate neutral Green. Quite permanent. Like Ultramarine, its colour is destroyed by acids.	
BROWNS.	*Vandyke, Cappah, Rubens, Cassel, and Cologne Browns.*	Decomposed Vegetable, with Bituminous Matter.	The best when deep, rich, and transparent.	There are other Browns, but many of them are less durable. Madder Brown, like all the other Madders, is liable to fade. Ivory and Bone Browns are not so permanent as the blacks of those substances. Catechu Brown, rich and transparent, is subject to fly when laid on thinly. Manganese Brown is semi-opaque, but a good drier. Prussian Brown (Ferrocyanide of Copper) is affected by foul gas, and destroyed by Alkalies. Calcined Prussian Blue is a fine Brown, but troublesome to prepare. The peaty Browns, probably from their vegetable colouring matter, have a slight tendency to become paler when used very thinly, and exposed to strong light.
	Terre Verte Brown.	Terre Verte. Burnt.	A quiet beautiful colour.	
	Umber.	An Iron Ore with Manganese.	An useful colour both Raw and Burnt.	
	Mummy.	White Pitch and Myrrh, combined with Animal Matter.	Rich transparent Brown.	
	Asphaltum.	Bitumen. A Mineral Pitch or Resin found floating on the Dead Sea; also after the distillation of Natural Naphtha.	Asphaltum is liable to crack except when in an unctuous or waxy vehicle.	
BLACKS.	*Ivory Black.*	Burnt Ivory.	Of a Brownish-black tint, quite permanent.	There are other permanent Blacks, as Bone-black (Burnt Bones), Lamp-black (pure Carbon), the Soot of Burnt Resin and Turpentine. Manganese-black, a native product, and a good drier (Peroxide of Manganese). There are also Black Ochres, native earths, but they are not required.
	Blue-black.	Burnt Vine Twigs, &c. Common Blacks mixed with insecure Blues are sometimes substituted by empirics. The Blue-black of the ancients was made with the lees of wine	Of a Bluish-black tint, perfectly durable.	

Digitized by Google

COLOURING MATTERS. The colour of any object, either natural or artificial, owes its origin to the effect produced on it by the rays of light. This effect is either due to the mass or substance of the body itself, as may be seen in the colours of metals and many shells, or it arises from the presence of some foreign substance or substances not absolutely essential to it, and which may in many cases be separated and removed from it. It is in speaking of these foreign substances which are often found colouring natural objects, or which are employed in the arts for the purpose of imparting colours to various materials, that we generally make use of the term COLOURING MATTER. By chemists, however, the term is only applied to organic bodies and not to mineral substances, such as oxide of iron, cinnabar, ultramarine, &c., which, though they are employed as pigments in the arts, differ very widely in their properties from one another and from colouring matters in the narrower sense of the word. Colouring matters may be defined to be substances produced in animal or vegetable organisms, or easily formed there by processes occurring in nature (such as oxidation or fermentation), and which are either themselves coloured or give coloured compounds with bases or with animal or vegetable fibre. According to this definition, bodies like carbazotic acid and murexide, which are formed by complicated processes such as never occur in nature, are excluded, though they resemble true colouring matters in many of their properties, such as that of giving intensely coloured compound bases. Whether, however, even after accepting the above definition, colouring matters can be considered as constituting a natural class of organic bodies, such as the fats, resins, &c., must still remain doubtful, though modern research tends to prove that these substances are related to one another by other properties besides the accidental one of colour, and will probably be found eventually to belong in reality to one natural class.

Colouring matters occur in all the organs of plants, in the root, wood, bark, leaves, flowers and fruit; in the skin, hair, feathers, blood, and various secretions of animals; in insects, for example, in various species of coccus; and in mollusca, such as the murex. Indeed there are very few plants or animals whose organs do not produce some kind of colouring matter. It is remarkable, however, that the colours which are most frequently presented to our view, such as those of the leaves and flowers of plants and the blood of animals, are produced by colouring matters with which we are but very little acquainted, the colouring matters used in the arts, and which have been examined with most care, being derived chiefly from less conspicuous organs, such as the roots and stems of plants. In almost all cases the preparation of colouring matters in a state of purity presents great difficulties, so that it may even be said that very few are known in that state.

Some colouring matters bear a great resemblance to the so-called extractive matters, others to resins. Hence they have been divided into *extractive* and *resinous* colouring matters. These resemblances are however of no great importance. The principal colouring matters possess such peculiar properties that they must be considered as bodies altogether *sui generis*.

As regards their most prominent physical characteristic, colouring matters are divided into three principal classes; viz., the red, yellow, and blue, the last class comprising the smallest number. Only one true green colouring matter occurs in nature, viz., chlorophyll, the substance to which the green colour of leaves is owing.* Black and brown colouring matters are also uncommon, the black and brown colours obtained in the arts from animals or vegetables being (with the exception of sepia and a few others) compounds of colouring matters with bases. The colours of natural objects are often due to the presence of more than one colouring matter. This may easily be seen in the petals of some flowers. If, for instance, the petals of the orange-coloured variety of the *Tropæolum majus* be treated with boiling water, a colouring matter is extracted which imparts to the water a purple colour. The petals now appear yellow, and if they be treated with boiling spirits of wine, a yellow colouring matter is extracted, and they then become white. When the purple colouring matter is absent the flowers are yellow; when, on the contrary, it is present in greater abundance, they assume different shades of brown. Precisely the same phenomena are observed in treating the petals of the brown *Calceolaria* successively with boiling water and spirits of wine. In many cases colouring matters exhibit, when in an uncombined state, an entirely different colour from what they do when they enter into a state of combination. The colouring matter of litmus, for instance, is, when uncombined, red, but its compounds with alkalics are blue. The alkaline compounds of alizarine are of a rich violet colour, while the substance itself is reddish-yellow. Many yellow colouring matters become brown by the action of alkalies, and the blue

* Another green colouring matter, derived from different species of *Rhamnus*, has lately been described under the name of "Chinese Green." It is stated to be a peculiar substance, not as might be supposed, a mixture of a blue and a yellow colouring matter.

Digitized by Google

colouring matters of flowers generally turn green when exposed to the same influence. The classification of colouring matters, according to colour, is therefore purely artificial. The terms red, yellow, and blue colouring matter, merely signify that the substance itself possesses one of these colours, or that most of its compounds are respectively red, yellow, or blue. In almost all cases, even when the colour is not entirely changed by combination with other bodies, its intensity is much increased thereby, substances of a pale yellow colour becoming of a deep yellow, and so on.

Colouring matters consist, like most other organic substances, either of carbon, hydrogen, and oxygen, or of those elements in addition to nitrogen. The exact relative proportions of these constituents, however, is known in very few cases, and in still fewer instances have the chemical formulæ of the compounds been established with any approach to certainty. This proceeds on the one hand from the small quantities of these substances usually present in the organs of plants and animals, and the difficulty of obtaining sufficient quantities for examination in a state of purity, and on the other hand from the circumstance of their possessing a very complex chemical constitution and high atomic weight.

Only a small number of colouring matters are capable of assuming a crystalline form; the greater number, especially the so-called resinous ones, being perfectly amorphous. Among those which have been obtained in a crystalline form, may be mentioned alizarine, indigo-blue, quercitrine, morine, luteoline, chrysophan, and rutine. It is probable, however, that when improved methods have been discovered of preparing colouring matters, and of separating them from the impurities with which they are so often associated, many which are now supposed to be amorphous will be found to be capable of crystallising.

Very little is known concerning the action of light on colouring matters and their compounds. It is well known that these bodies when exposed to the rays of the sun, especially when deposited in thin layers on or in fabrics made of animal or vegetable materials, lose much of the intensity of their colour, and sometimes even disappear entirely, that is, they are converted into colourless bodies. But whether this process depends on a physical action induced by the light, or whether, as is more probable, it consists in promoting the decomposing action of oxygen and moisture on them, is uncertain. The most stable colouring matters, such as indigo-blue and alizarine in its compounds, are not insensible to the action of light. Others, such as carthamine from safflower, disappear rapidly when exposed to its influence. Colours produced by a mixture of two colouring matters are often found to resist the action of light better than those obtained from one alone. In one case, viz., that of Tyrian purple, the action of light seems to be absolutely essential to the formation of the colouring matter. The leaves of plants also remain colourless if the plants are grown in darkness, though in this case the formation of the green colouring matter is probably not due to the direct chemical action of the light.

The action of heat on colouring matters varies very much according to the nature of the latter and the method of applying the heat. A moderate degree of heat often changes the hue of a colouring matter and its compounds, the original colour being restored on cooling, an effect which is probably due to physical causes. Sometimes this effect is, without doubt owing to the loss of water. Alizarine, for instance, crystallised from alcohol, when heated to 212° F. loses its water of crystallisation, its colour changing at the same time from reddish-yellow to red. At a still higher temperature most colouring matters are entirely decomposed, the products of decomposition being those usually afforded by organic matters, such as water, carbonic acid, carburetted hydrogen, empyreumatic oils, and, if the substance contains nitrogen, ammonia, or organic bases such as aniline. A few colouring matters, as for example alizarine, rubiacine, indigo-blue, and indigo-red, if carefully heated, may be volatilised without change, and yield beautifully crystallised sublimates, though a portion of the substance is sometimes decomposed, giving carbon and empyreumatic products.

Colouring matters, like most other organic substances, undergo decomposition with more or less facility when exposed to the action of oxygen; and the process may, indeed, be more easily traced, in their case, as it is always accompanied by a change of hue. Its effects may be daily observed in the colours of natural objects belonging to the organic world. Flowers, in many cases, lose a portion of their colour before fading. The leaves of plants, before they fall, lose their green colour and become red or yellow. The colour of venous blood changes, when exposed to the air, from dark red to light red. When exposed to the action of oxygen, blue and red colouring matters generally become yellow or brown; but the process seldom ends here: it continues until the colour is quite destroyed; that is, until the substance is converted into a colourless compound. This may be easily seen when a fabric, dyed of some fugitive colour, is exposed to the air. The intensity of the colour diminishes, in the first instance; it then changes in hue, and, finally, disappears entirely. Indeed, the whole process of bleaching in the

Digitized by Google

air depends on the concurrent action of oxygen, light, and moisture. The precise nature of the chemical changes which colouring matters undergo, during this process of oxidation, is unknown. No doubt, it consists, generally speaking, in the removal of a portion of their carbon and hydrogen, in the shape of carbonic acid and water, and the conversion of the chief mass of the substance into a more stable compound, capable of resisting the further action of oxygen. But this statement conveys very little information to the chemist, who, in order to ascertain the nature of a process of decomposition, requires to know exactly all its products, and to compare their composition with that of the substances from which they are derived. The indeterminate and uninteresting nature of the bodies into which most colouring matters are converted by oxidation, has probably deterred chemists from their examination. The action of oxygen on colouring matters varies according to their nature and the manner in which the oxygen is applied, and it is the degree of resistance which they are capable of opposing to its action that chiefly determines the stability of the colours produced by their means in the arts. Indigo-blue shows no tendency to be decomposed by gaseous oxygen at ordinary temperatures; it is only when the latter is presented in a concentrated form, as in nitric or chromic acid, or in a nascent state, as in a solution of ferridcyanide of potassium containing caustic potash, that it undergoes decomposition. When, however, indigo-blue enters into combination with sulphuric acid, it is decomposed by means of oxygen with as much facility as some of the least stable of this class of bodies. Some colouring matters are capable of resisting the action of oxygen even in its most concentrated form. Of this kind are rubianine and rubiacine, which, when treated with boiling nitric acid, merely dissolve in the liquid and crystallise out again, when the latter is allowed to cool. The action of atmospheric oxygen on colouring matters is generally promoted by alkalies, and retarded in the presence of acids. A watery solution of hematine, when mixed with an excess of caustic alkali, becomes of a beautiful purple; but the colour, when exposed to the air, almost immediately turns brown, the hematine being then completely changed. It is almost needless to observe, that the bodies into which colouring matters are converted by oxidation, are incapable, under any circumstances, of returning to their original state.

The action of reducing agents, that is of bodies having a great affinity for oxygen, on some colouring matters, is very peculiar. If indigo-blue, suspended in water, be placed in contact with protoxide of iron, protoxide of tin, or an alkaline sulphuret, sulphite or phosphite, or grape sugar, or, in short, any easily oxidisable body, an excess of some alkali or alkaline earth being present at the same time, it dissolves, forming a pale yellow solution without a trace of blue. This solution contains, in combination with the alkali or alkaline earth, a perfectly white substance, to which the name of *reduced indigo* has been applied. When an excess of acid is added to the solution, it is precipitated in white flocks. By exposure to the air, either by itself or in a state of solution, reduced indigo rapidly attracts oxygen, and is reconverted into indigo-blue. Hence the surface of the solutions, if left to stand in uncovered vessels, becomes covered with a blue film of regenerated indigo-blue. It was for a long time supposed that reduced indigo was simply deoxidised indigo-blue, and that the process consisted merely in the indigo-blue parting with a portion of its oxygen, which was taken up again on exposure to the air. It has, however, been discovered that in every case water is decomposed during the process of reduction which indigo-blue undergoes, the oxygen of the water combining with the reducing agent, and the hydrogen uniting with the indigo-blue, water being again formed when reduced indigo comes in contact with oxygen. Reduced indigo is therefore not a body containing less oxygen than indigo-blue, but is a compound of the latter with hydrogen. There are several red colouring matters which possess the same property, that of being converted into colourless compounds by the simultaneous action of reducing agents and alkalies, and of returning to their original state when exposed to the action of oxygen. There can be little doubt that the process consists, in all cases, in the colouring matter combining with hydrogen and parting with it again when the hydruret comes in contact with oxygen.

The action of chlorine on colouring matters is very similar to that of oxygen, though, in general, chlorine acts more energetically. The first effect produced by chlorine, whether it be applied as free chlorine, or in a state of combination with an alkali, or alkaline earth as an hypochlorite, usually consists in a change of colour. Blue and red colouring matters generally become yellow. By the continued action of chlorine all trace of colour disappears, and the final result is the formation of a perfectly white substance, which is usually more easily soluble in water and other menstrua than that from which it was formed. Since it is most commonly by means of chlorine or its compounds that colouring matters are destroyed or got rid of in the arts, as in bleaching fabrics and discharging colours, the process of decomposition which they undergo by means of chlorine has attracted a good deal of attention, and the nature of the chemical changes, which take place in the course of it, has often been made a subject of dispute,

Digitized by Google

though the matter is one possessing more of a theoretical than a practical interest. It is a well known fact that many organic bodies are decomposed when they are brought into contact, in a dry state, with dry chlorine gas. The decomposition consists in the elimination of a portion of the hydrogen of the substance and its substitution by chlorine. When water is present at the same time, the decomposition is, however, not so simple. It is well known that chlorine decomposes water, combining with the hydrogen of the latter and setting its oxygen at liberty, and it has been asserted, that in the bleaching of colouring matters by means of chlorine when moisture is usually present, this always takes place in the first instance, and that it is in fact the oxygen which effects their destruction, not the chlorine. This appears, indeed, to be the case occasionally. Rubian, for instance, the body from which alizarine is derived, gives, when decomposed with chloride of lime, phthalic acid, a beautifully crystallised substance, containing no chlorine, which is also produced by the action of nitric acid on rubian, and is, therefore, truly a product of oxidation. In many cases, however, it is certain that the chlorine itself also enters into the composition of the new bodies produced by its action on colouring matters. When, for instance, chlorine acts on indigo-blue, chlorisatine is formed, which is indigo-blue, in which one atom of hydrogen is replaced by one of chlorine, plus two atoms of oxygen, the latter being derived from the decomposition of water.

The behaviour of colouring matters towards water and other solvents is very various. Some colouring matters, such as those of logwood and brazilwood, are very easily soluble in water. Others, such as the colouring matters of madder and quercitron bark, are only sparingly soluble in water. Many, especially the so-called resinous ones, are insoluble in water, but more or less soluble in alcohol and ether, or alkaline liquids. A few, such as indigo-blue, are almost insoluble in all menstrua, and can only be made to dissolve by converting them, by means of reducing agents, into other bodies soluble in alkalies. Those which are soluble in water, are, generally speaking, of the greatest importance in the arts, since they admit of more ready application, when they possess this property.

The behaviour of colouring matters towards acids, is often very characteristic. Most colouring matters are completely decomposed by nitric, chloric, manganic, and chromic acids in consequence of the large proportion of oxygen which these acids contain. With many colouring matters the decomposition takes place even at the ordinary temperature; with others, it only commences when the acid is warmed, especially if the latter be applied in a state of considerable dilution. Concentrated sulphuric acid also destroys most colouring matters, especially if the acid be heated. It seems to act by depriving them of the elements of water, and thereby converting them into substances containing more carbon than before, as may be inferred from the dark almost black colour which they acquire. At the same time the acid generally loses a portion of its oxygen, since sulphurous acid is almost always evolved on heating. Some colouring matters, such as alizarine, are not decomposed by concentrated sulphuric acid even when the latter is raised to the boiling point; they merely dissolve, forming solutions of various colours, from which they are precipitated unchanged, on the addition of water, when they are insoluble or not easily soluble in the latter. Others, again, like indigo-blue, dissolve in concentrated or fuming sulphuric acid, without being decomposed, and at the same time enter into combination with the acid, forming true double acids, which are easily soluble in water and combine as such with bases. Many colouring matters undergo a change of colour when exposed to the action of acids, the original colour being restored by the addition of an excess of alkali, and this property is made use of for the detection of acids and alkalies. The colour of an infusion of litmus, for instance, is changed by acids from blue to red, and the blue colour is restored by alkalies. An infusion of the petals of the purple dahlia or of the violet becomes red on the addition of acids, and this red colour changes again to purple or blue with alkalies, an excess of alkali making it green. The yellow colour of rutine becomes deeper with strong acids. In most cases, this alteration of colour depends on a very simple chemical change. Litmus, for example, in the state in which it occurs in commerce, consists of a red colouring matter in combination with ammonia, the compound being blue. By the addition of an acid, the ammonia is removed, and the uncombined red colouring matter makes its appearance. Ammonia and most alkalies remove the excess of acid, and, by combining with the red colouring matter, restore the blue colour. When a colouring matter, like alizarine, is only sparingly soluble in water, its solubility is generally diminished in the presence of a strong acid. Hence, by adding acid to the watery solution, a portion of the colouring matter is usually precipitated. It is very seldom that colouring matters are really found to enter into combination with acids. Indeed, only one, viz. berberine, is capable of acting the part of a true base, and forming definite compounds with acids. Some acids, such as sulphurous and hydrosulphuric acids, do certainly seem to combine with some colouring

Digitized by Google

matters and form with them compounds, in which the colour is completely disguised, and apparently destroyed. If a red rose be suspended in an atmosphere of sulphurous acid it becomes white, but the red colour may be restored by neutralising the acid with some alkali. On this property of sulphurous acid depends the process of bleaching woollen fabrics by means of burning sulphur. In this case the colouring matter is not destroyed but only disguised by its combination with the acid.

Most colouring matters are capable of combining with bases. Indeed, their affinity for the latter, is generally so marked that they may be considered as belonging to the class of weak acids. Like all other weak acids they form, with bases, compounds of a very indefinite composition, so much so that the same compound, prepared on two different occasions, is often found to be differently constituted. Hence the great difficulty experienced by chemists in determining the atomic weight of colouring matters. There are very few of the latter for which several formulæ, all equally probable, may not be given, if the compounds with bases be employed for their determination. The compounds of colouring matters with bases hardly ever crystallise. Those with alkalies are mostly soluble in water and amorphous; those with the alkaline earths, lime and baryta, are sometimes soluble, sometimes insoluble; those with the earths and metallic oxides are almost always insoluble in water. The compounds with alkalies are obtained by dissolving the colouring matter in water to which a little alkali is added, and evaporating to dryness, an operation which must be carefully conducted if the colouring matter is one easily affected by oxygen. The insoluble compounds, with earths and metallic oxides, are obtained either by double decomposition of a soluble compound with a soluble salt of the respective base, or by adding to a solution of the colouring matter, in water or any other menstruum, a salt of the base containing some weak acid, such as acetic acid. It is remarkable that of all bases none show so much affinity for colouring matters as alumina, peroxide of iron, and peroxide of tin, bodies which occupy an intermediate position between acids and bases. If a solution of any colouring matter be agitated with a sufficient quantity of the hydrates of any of these bases, the solution becomes decolourised, the whole of the colouring matter combining with the base and forming a coloured compound. It is accordingly these bases that are chiefly employed in dyeing, for the purpose of fixing colouring matters on particular portions of the fabric to be dyed. When used for this purpose they are called *mordants*. Their compounds with colouring matters are denominated *lakes*, and are employed as pigments by painters The colours of the compounds usually differ, either in kind or degree, from those of the colouring matters themselves. Red colouring matters often form blue compounds, yellow ones sometimes give red or purple compounds. The compounds with peroxide of iron are usually distinguished by the intensity of their colour. When a colouring matter gives with alumina and oxide of tin red compounds, its compound with peroxide of iron is usually purple or black; and when the former are yellow, the latter is commonly olive or brown. Almost all the compounds of colouring matters with bases are decomposed by strong acids, such as sulphuric, muriatic, nitric, oxalic, and tartaric acids, and even acetic acid is not without effect on some of these compounds. The compounds with earths and metallic oxides are also decomposed, sometimes, by alkalies. A solution of soap is sufficient to produce this effect in many cases, and dyes are therefore often tested by means of a solution of soap in order to ascertain the degree of permanence which they possess.

No property is so characteristic of colouring matters, as a class, as their behaviour towards bodies of a porous nature, such as charcoal. If a watery solution of a colouring matter be agitated with charcoal, animal charcoal being best adapted for the purpose, the colouring matter is in general entirely removed from the solution and absorbed by the charcoal. The combination which takes place under these circumstances is probably not due to any chemical affinity, but is rather an effect of the so-called attraction of surface, which we often see exerted by bodies of a porous nature, such as charcoal and spongy platinum, and which enables the latter to absorb such large quantities of gases of various kinds. That the compound is indeed more of a physical than a chemical nature seems to be proved by the circumstance that sometimes the colouring matter is separated from its combination with the charcoal by means of boiling alcohol, an agent which can hardly be supposed to exert a stronger chemical affinity than water. It is this property of colouring matters which is made use of by chemists to decolourise solutions, and by sugar manufacturers to purify their sugar. The attraction manifested by colouring matters for animal or vegetable fibre is probably also a phenomenon of the same nature, caused by the porous condition of the latter, and the powerful affinity of the so-called mordants for colouring matters, may, perhaps, be in part accounted for by their state of mechanical division being different from that of other bases. Colouring matters, however, vary much from one another in their behaviour towards animal or vegetable fibre. Some, such as indigo-blue, and the colouring matters of safflower and turmeric, are capable of combining directly with the latter and imparting to them

Digitized by Google

colours of great intensity. Others are only slightly attracted by them and consequently impart only feeble tints; they therefore require, when they are employed in the arts for the purpose of dyeing, the interposition of an earthy or metallic base. To the first class Bancroft applied the term *substantive* colouring matters, to the second that of *adjective* colouring matters.

One of the most interesting questions connected with the history of colouring matters is that in regard to the original state in which these substances exist in the animal and vegetable organisms from which they are derived. It has been known for a long time that many dye-stuffs, such as indigo and archil, do not exist ready formed in the plants from which they are obtained, and that a long and often difficult process of preparation is required in order to eliminate them. The plants which yield indigo exhibit, while they are growing, no trace of blue colour. The colouring matter only makes its appearance after the juice of the plant has undergone a process of fermentation. The lichens employed in the preparation of archil and litmus are colourless, or at most light brown, but by steeping them in liquids containing ammonia and lime a colouring matter of an intense red is gradually generated, which remains dissolved in the alkaline liquid. Other phenomena of a similar nature might be mentioned, as for instance the formation of the so-called Tyrian purple from the juice of a shell-fish, and new ones are from time to time being discovered. In order to explain these phenomena various hypotheses have been resorted to. It was supposed, for instance, that the indigoferæ contained white or reduced indigo, and hence were devoid of colour, and that the process of preparing indigo-blue consisted simply in oxidising the white indigo, which was for this reason denominated *indigogene*, by some chemists. The same assumption was made in regard to other colouring matters, all of which were supposed to exist originally in a de-oxidised and colourless state. In regard to indigo, however, the hypothesis is disproved at once by the fact that reduced indigo is only soluble in alkaline liquids, and that the juice of the indigo bearing plants is always acid. In regard to the other colouring matters it seems also to be quite untenable. The first person to throw some light on this obscure department of organic chemistry was Robiquet. This distinguished chemist succeeded in obtaining from lichens in their colourless state a beautifully crystallised, colourless substance soluble in water, having a sweet taste, and consisting of carbon, hydrogen, and oxygen. This substance he denominated *orcine*. By the combined action of ammonia and oxygen, he found it to be converted into a red colouring matter, containing nitrogen, and insoluble in water, which was in fact identical with the colouring matter of archil. This beautiful discovery furnished chemists with a simple explanation for the curious phenomena observed in the formation of this and other colouring matters, and it was soon followed by others. Heeren and Kane obtained from various lichens other colourless substances of similar properties, and it was shown by Schunck that orcine is not even the first link in the chain, but is itself formed from another body, *lecanorine*, which, by the action of alkalies, yields orcine and carbonic acid, just as sugar by fermentation gives alcohol and carbonic acid. In like manner, it was discovered by Erdmann that the colouring matter of logwood is formed by the simultaneous action of oxygen and alkalies from a crystallised colourless substance, *hæmatoxyline*, which is the original substance existing in the wood of the tree, and is like the others, not itself, strictly speaking, a colouring matter, but a substance which gives rise to the formation of one.

There is, however, another class of phenomena connected with the formation of colouring matters, entirely different from that just referred to. It was discovered by Robiquet that if madder be treated for some time with sulphuric acid, and the acid be afterwards completely removed, the madder is found to have acquired a much greater tinctorial power than before. This fact was explained by some chemists by supposing that the sulphuric acid had combined with or destroyed some substance or substances, contained in the madder which had previously hindered the colouring matter from exerting its full power in dyeing, such as lime, sugar, woody fibre, &c. By others it was suspected that an actual formation of colouring matter took place during the process, and this suspicion has been verified by recent researches. Schunck succeeded in preparing from madder a substance resembling gum, very soluble in water, amorphous, and having a very bitter taste, like madder itself, and to which he gave the name of *rubian*. This substance, though not colourless, is incapable of combining with mordants, like most colouring matters. When, however, it is acted on by strong acids, such as sulphuric or muriatic acid, it is completely decomposed, and gives rise to a number of products, the most important of which is *alizarine*, one of the colouring matters of madder itself. Among the other products are a yellow crystallised colouring matter, *rubianine*, two amorphous red colouring matters resembling resins, *rubiretine* and *verantine*, and lastly, grape sugar. When subjected to fermentation, the same products are formed, with the exception of rubianine, which is replaced by a yellow colouring matter of similar properties. This process of decomposition evidently belongs to

Digitized by Google

that numerous class called by some chemists "catalytic," in which the decomposing agent does not act, as far as we know, in virtue of its chemical affinities. It is evident, then, that when madder is acted on by sulphuric acid an actual formation of colouring matter takes place, and it is even probable that the whole of the colouring matter found in madder in its usual state was originally formed from rubian, by a process of slow fermentation, the portion of the latter still remaining undecomposed being that which is acted on when acids are applied to madder. From the *Isatis tinctoria* or common woad plant, Schunck, in like manner, extracted an amorphous substance, easily soluble in water, called by him *indican*, and which, by the action of strong acids, is decomposed into indigo-blue, indigo-red, sugar, and other products, among which are also several resinous colouring matters. Looking at them from this point of view, colouring matters may be divided into two classes, viz., first, such as are formed from other substances, not themselves colouring matters, by the action of oxygen and alkalies; and, secondly, such as are formed from other substances by means either of ferments or strong acids, without the intervention of oxygen. To the first class belong the colouring matters of archil, litmus, and logwood; they yield comparatively fugitive dyes, and are usually decomposed by allowing the very process to which they owe their formation to continue. To the second class belong indigo-blue, indigo-red, and alizarine, bodies which show a remarkable degree of stability for organic compounds. More extended research will probably show that many other colouring matters are formed either in one manner or the other, which will probably afford us the means of arriving at a rational mode of classifying these bodies, and of distinguishing them as a class from others.—E. S.

COLOPHONY. Black resin, the solid residuum of the distillation of turpentine when all the oil has been worked off.

COLUMBIUM or NIOBIUM. A peculiar metal extracted from a rare mineral brought from Haddam in Connecticut. It is also called Tantalium, from the mineral *tantalite* and *yttrotantalite*, found in Sweden. See NIOBIUM.

COLUMNAR COAL. A name given to ANTHRACITE, which see.

COLT'S FOOT. See TUSSILAGO.

COLZA, is a variety of cabbage, — the *Brassica oleracea*. — whose seeds afford by pressure an oil much employed in France and Belgium for burning in lamps, and for many other purposes. This plant requires a rich but light soil; it does not succeed upon either sandy or clay lands. The ground for it must be deeply ploughed and well dunged. It should be sown in July, and be afterwards replanted in a richly manured field. In October it is to be planted out in beds, 15 or 18 inches apart. Colza may also be sowed in furrows 8 or 10 inches asunder.

Land which has been just cropped for wheat is that usually destined to colza; it may be fresh dunged with advantage. The harvest takes place in July, with a sickle, a little before the seeds are completely ripe, lest they should drop off. As the seed is productive of oil, however, only in proportion to its ripeness, the cut plants are allowed to complete their maturation, by laying them in heaps under airy sheds, or placing them in a stack, and thatching it with straw.

The cabbage stalks are thrashed with flails, the seeds are winnowed, sifted, and spread out in the air to dry; then packed away in sacks, in order to be subjected to the oil mill at the beginning of winter. The oil-cake is a very agreeable food to cattle; it serves to fatten them, and is reckoned to defray the cost of the mill.

When proper manure was not applied, it was reported that colza impoverished the soil very much, as do, indeed, all the plants cultivated for the sake of their oleaginous seeds. The same soil must not, therefore, be come back upon again for six years, if fine crops be desired. The double ploughing which it requires effectually cleans the ground.

The colza or wild cabbage itself is a plant of sufficient interest to call special attention to its properties. Besides yielding an oil which gives a brilliant light for the lamps of lighthouses, its seed has other properties that should induce the plant to be in favour with agriculturists, emigrants, and colonists. The *recent* accounts, according to Du Bow, state "it to be admirably adapted for cattle as food; that the seeds after the oil is expressed yield a cake highly prized for fattening cattle, and as manure." "There is a spring variety which will succeed in almost any part of the United States, and will ultimately become an article of great importance."

The real history of this valuable plant seems to be this. The Abbe de Commerell, in a letter to Dr. Lettsom, dated from Paris at the Abbey of St. Victor, 1789, calls especial attention to the colza which he had cultivated for some time in the neighbourhood of Paris, "and last year under the inspection of the Royal Society of Agriculture. The severe winter just experienced, which had destroyed great abundance of turnips and cole, had not done the least injury to my plants, which is a proof of resisting the severest cold." The following description of the plant may lead to its adoption as sources of oil and food. To induce this we may refer to the original communication,

Digitized by Google

now of course sufficiently rare: it is entitled — "*Mémoire sur la culture l'usage et les avantages du Choux à faucher, par M. l'Abbé de Commerell, à Paris,*" 1789. He states he found the plant in Germany, where it was only used for seed; that there are three distinct varieties, known by the colours of the "nerves" of the leaves — violet, yellow, and green. He gives preference to the violet, "il est plus abondant, plus sapide et resiste mieux à l'impression du froid et à la rigueur des hivers." He adds that he presents to the Royal Society (Agric. de Paris) the plants which had resisted the cold of the preceding winter, "the most rigorous of which mention is made in our annals."

Again Commerell says: "This plant is a kind of wild cabbage that may be cut four or six times in the year it is sown; each cut is as plentiful as trefoil or lucerne: we leave it afterwards for the winter. About the month of February it shoots up, and the leaves of it may be cut; but in the month of April it begins to grow up, send off stalks, and bears its seed, which may be gathered in June. The first year this wild cabbage does not send *stalks*; its *leaves* appear to rise out of the ground, and thus it may be *cut like grass*; it may also be *dried for hay*. Its leaves extend to 10, 12, and 15 inches in length and 6 to 8 broad, which have not the bitter and herbaceous taste of other cabbages. It is a pulse very agreeable for man during the whole year, and a fodder equally as good as plentiful for all kinds of cattle. The milk of cows does not acquire a bad taste, nor do the cows get tired of it."

"This plant bears more and larger sized seed than turnips or cole, and the oil which I have extracted from it cold is very superior as food for man to that from poppy or cole, and is equal to the common oil of olives in the opinion of good judges. I give the name of the *mowing cabbage* to this plant. If you will make a trial of it," he adds to Dr. Lettsom, "you will have every reason to be satisfied, for this cabbage yields one third more oil than turnips in proportion to the equal quantity of ground, and we may sow it in spring or in autumn."

When Commerell wrote the trials were limited for want of seed, but it now appears to be well worthy the attention of agriculturists, as a plant whose rapid growth and general favour, may remedy the scarcity of other crops more in use. At the end of sixty years the production of the oil alone forms a considerable article of the trade of France, Belgium, England, and America.

To mining districts, to manufacturers, and others in remote localities, the valuable properties of this plant and seed, as sources of oil, food, and manure, are commended. Even six crops a year are said to have been taken. Thus the bitterness of famine by the failure of other crops might be mitigated; and as the oils of seeds are now confusedly mixed together in commercial transactions, we have thought the usefulness of this plant should be more generally known by references to those qualities recorded on its original cultivation.

Colza oil is now extensively used for burning in lamps and for lubricating machinery. The Carcel, Moderator, and other lamps are contrived to give a continuous supply of oil to the wick, and by a rapid draught of air brilliant combustion of the oil is maintained without smoke.

In the lighthouses of France and England it has been employed with satisfaction, so as to replace the use of sperm oil; the preference has been given on the grounds of greater brilliancy, a steadier flame, the wick being less charred, and the advantage of economy in price.

The corporation of the Trinity House and the late Mr. Hume took great interest in the question of the relative merits of colza, rape, and seed oils, as compared with sperm oil, and in 1845 referred the investigation of the power and qualities of the light from this description of oil, to Professor Faraday. He reported "that he was much struck with the steadiness of the flame, burning 12 or 14 hours without being touched;" "taking above 100 experiments, the light came out as one and a half for the seed oil to one of the sperm; the quantity of oil being used in the same proportion;" and he concludes by stating his "confidence in the results."

The advantages then were, less trouble, for the lamps with sperm had to be retrimmed, and the same lamp with seed oil gave more light, and the cost then was as 3*s.* 9*d.* per gallon seed oil, against 6*s.* 4*d.* imperial gallon of sperm.

Those interested should consult returns, ordered by the House of Commons,— "LIGHTHOUSES, *on the motion of Mr. Hume, 'On the substitution of Rape seed oil for Sperm oil, and the saving accruing therefrom.'* 17*th Feb.* 1857; No. 75; 18*th March*, 1857, 196 and 196 I."

In the Supplementary Returns laid before the House of Commons by the *Commissioners of the Northern Lights*, there is the following report of Alan Stevenson, Esq., their Engineer: —

"In the last annual report on the state of the lighthouses, I directed the attention of the Board to the propriety of making trial, at several stations, of the patent culzà or rape seed oil, as prepared by Messrs. Briggs and Garford, of Bishopsgate Street.

Digitized by Google

These trials have now been made during the months of January and February, at three catoptric and three dioptric lights, and the results have from time to time been made known to me by the light-keepers, according to instructions issued to them, as occasion seemed to require. The substantial agreement of all the reports as to the qualities of the oil renders it needless to enter into any details as to the slight varying circumstances of each case; and I have therefore great satisfaction in briefly stating, as follows, the very favourable conclusion at which I have arrived:—

"1. The culzà oil possesses the advantage of remaining fluid at temperatures which thicken the spermaceti oil.

"2. The culzà oil burns both in the Fresnel lamp and the single argand burner, with a thick wick, during seventeen hours, without requiring any coaling of the wick, or any adjustment of the damper; and the flame seems to be more steady and free from flickering than that from spermaceti oil.

"3. There seems (most probably owing to the greater steadiness of the flame) to be less breakage of glass chimneys with the culzà than with the spermaceti oil."

The above firm, who from thirty years' experience in the trade, were enabled to induce the Trinity Corporation to give this oil a fair and extended trial, state that "for manufacturing purposes it is equally useful; it is admitted by practical men to be the best known oil for machinery; equal to Gallipoli; and technically it possesses more 'body,' though perfectly free from gummy matter."

While sperm, Gallipoli, nut, or lard oils are rendered useless by the slightest exposure to frost, the colza oil will, with ordinary care, retain its fluidity: this has been acknowledged as a very important quality to railway and steam boat companies.

It should be here stated that the terms rape oils, seed oils, colza or culzà are all now blended together, and, however much this may be regretted, yet it does not seem easy to keep distinctness in the general usages of oil, for the customs returns class all under one head,—rape oil.

A number of British and colonial seed-bearing plants appear to be now employed for the sake of their oils, although, on account of the mucilaginous matter contained in many of the oils, they are far inferior to the colza which they are employed to adulterate.—T. J. P.

Of the importance of the trade some estimate may be formed by the following entry.—The *importations* of seed oils in 1863 and 1864 were—

	1863		1864	
	Tons.	Computed real value.	Tons.	Computed real value.
From Prussia	965	£43,443	1,891	£83,666
Hamburg	1,355	65,044	2,952	129,167
Holland	3,122	134,867	1,292	54,487
Belgium	777	31,354	484	20,014
France	4,145	184,728	3,049	135,381
Portugal	344	12,910	574	18,010
French Possessions in India	394	17,968	506	17,527
India, Singapore, and Ceylon	1,569	67,735	688	31,952
Other parts	27	1,293	334	12,344
	12,693	559,342	11,770	502,548

COMB. The name of an instrument which is employed to dis angle, and lay parallel and smooth the hairs of man, horses, and other animals. They are made of thin plates, either plane or curved, of wood, horn, tortoise-shell, ivory, bone, or metal, cut upon one or both sides or edges with a series of somewhat long teeth, not far apart.

Two saws mounted on the same spindle are used in cutting the teeth of combs, which may be considered as a species of grooving process; one saw is in this case larger in diameter than the other and cuts one tooth to its full depth, whilst the smaller saw, separated by a washer as thick as the required teeth, cuts the succeeding tooth part way down.

A few years back, Messrs Pow and Lyne invented an ingenious machine for sawing boxwood or ivory combs. The plate of ivory or box wood is fixed in a clamp suspended on two pivots parallel with the saw spindle, which has only one saw. By the revolution of the handle a cam first depresses the ivory on the revolving saw, cuts one notch, and quickly raises it again; the handle in completing its circuit shifts the slide that carries the suspended clamp to the right, by means of a screw and ratchet movement. The teeth are cut with great exactness, and as quickly as the handle can be turned; they vary from about thirty to eighty teeth in one inch, and such is the delicacy of some of the saws, that even 100 teeth may be cut in one inch of ivory.

Digitized by Google

The saw runs through a cleft in a small piece of ivory, fixed vertically or radially to the saw, to act as the ordinary stops, and prevent its flexure or displacement sideways. Two combs are usually laid one over the other and cut at once; occasionally the machine has two saws, and cuts four combs at once.

In the manufacture of tortoise-shell combs, very much ingenuity is displayed in soldering the back of a large comb to that piece which is formed into teeth. The two parts are filed to correspond; they are surrounded by pieces of linen, and inserted between metal moulds, connected at their extremities by metal screws and nuts; the interval between the halves of the mould being occasionally curved to the sweep required in the comb; sometimes also the outer faces of the mould are curved to the particular form of those combs in which the back is curled round, so as to form an angle with the teeth. Thus arranged it is placed in boiling water. The joints when properly made cannot be detected, either by the want of transparency or polish. Much skill is employed in turning to economical account the flexibility of tortoiseshell in its heated state: for example, the teeth of the larger descriptions of comb are *parted*, or cut one out of the other with a thin frame saw; then the shell, equal in size to two combs with their teeth interlaced, is bent like an arch in the direction of the length of the teeth. The shell is then flattened, the points are separated with a narrow chisel or pricker, and the two combs are finished whilst flat, with coarse single cut files, and triangular scrapers; and lastly, they are warmed, and bent on the knee over a wooden mould by means of a strap passed round the foot, in the manner a shoemaker fixes a shoe last. Smaller combs of horn and tortoise-shell are parted whilst flat, by an ingenious machine with two chisel-formed cutters, placed obliquely, so that every cut produces one tooth, the repetition of which completes the formation of the comb.

Mr. Rogers's comb-cutting machine is described in the *Transactions of the Society of Arts*, vol. xlix., part 2, page 150. It has been since remodelled and improved by Mr. Kelly. This is an example of slender chisel-like punches. The punch or chisel is in two parts, slightly inclined and curved at the ends to agree in form with the outline of one tooth of the comb, the cutter is attached to the end of a jointed arm, moved up and down by a crank, so as to penetrate almost through the material, and the uncut portion is so very thin that it splits through at each stroke and leaves the two combs detached.

The combmaker's double saw is called a "*stadda*," and has two blades contrived so as to give with great facility and exactness the intervals between the teeth of combs, from the coarsest to those having from forty to forty-five teeth to the inch. The *gage-saw* or *gage-vid* is used to make the teeth square and of one depth. The saw is frequently made with a loose back, like that of ordinary *back-saws*, but much wider, so that for teeth ¼ ⅜ ½ inch long, it may shield all the blade except ¼ ⅜ ½ inch of its width respectively, and the saw is applied until the back prevents its further progress. Sometimes the blade has teeth on both edges, and is fixed betwen two parallel slips of steel connected beyond the ends of the saw blade by two small thumbscrews. After the teeth of combs are cut they are smoothed and polished with files, and by rubbing them with pumice stone and tripoli.—*Holtzapffel.*

COMBINING NUMBERS AND CHEMICAL COMBINATION.—Constancy of composition is one of the most essential characters of chemical compounds; by which is meant that any particular body, under whatever circumstances it may have been produced, consists invariably of the same elements in identically the same proportion; the converse of this is not, however, necessarily true, that the same elements in the same proportion always produce the same body. (See ISOMERISM).

But not only is there a fixity in the proportion of the constituents of a compound; but also, if any one of the elements be taken, it is found to unite with the other elements in a proportion which is either invariable, or changes only by some very simple multiple.

The numbers expressing the combining proportions of the elements are only relative. In England it is usual to take hydrogen as the starting point, and to call that number the *combining number* of any other element which expresses the proportion in which it unites with one part by weight of hydrogen; and these numbers are now becoming adopted on the Continent, although in France the combining numbers are still referred to oxygen, which is taken as 100. It is obvious that, whichever system is used, the numbers have the same value relatively to each other.

These combining numbers would have but little value if they expressed nothing more than the proportion in which the elements combine with that body arbitrarily fixed as the standard; but they also represent the *proportions in which they unite among themselves in the event of union taking place.* Thus, not only do 8 parts of oxygen unite with one of hydrogen, but also 8 parts of oxygen unite with 39 of potassium, 23 of sodium, 100 of mercury, 108 of silver, &c. It is in virtue of this law that the combining proportions of many of the elements have been ascertained. Some of them do not combine with hydrogen at all, and in such cases the quantity which unites with 8 parts of oxygen, or 16 of sulphur, &c. has to be ascertained. (See EQUIVALENTS.)—H. M. W.

Digitized by Google

COMBUSTIBLE. (Eng. and Fr.; *Brennstoff*, Germ.) Any substance which, exposed in the air to a certain temperature, consumes with the emission of heat and light. All such combustibles as are cheap enough for common use go under the name of Fuel; which see. Every combustible requires a peculiar pitch of temperature to be kindled, called its *accendible* point. Thus phosphorus, sulphur, hydrogen, carburetted hydrogen, carbon, each takes fire at successively higher heats.

COMBUSTIBLE SUGAR. When sugar is acted on by a mixture of nitric and sulphuric acids, a peculiar substance is produced, having a close resemblance to common resin, not only in its appearance and physical characters, but also in regard to its solubility in alcohol, ether, volatile oils, &c., and insolubility in water. This substance is, however, extremely inflammable and explosive, and possesses many of the properties ascribed to the celebrated Greek fire. Its affinity for alcohol and ether is so great that water will not remove these fluids from it. "Not having yet succeeded in producing with it any definite basic compound which would enable me to control my results, I have not attempted its analysis. The only purposes to which I have applied it are to the formation of fusees for shells, and to the preservation of gunpowder and pyrotechnical articles from damp and moisture. As a fusee, it is easily lighted, burns with great regularity, and appears absolutely incapable of being extinguished, circumstances which would render it of great use in ricochet practice. As a means of preventing the mischievous effect of damp and moisture on gunpowder it is of great value. The best mode of application is to plunge the gunpowder for a few seconds into an alcoholic or ethereal solution of the sugar compound, then withdraw it and allow it to dry at a gentle heat, say 120° Fahr., though there is no danger of an explosion at 212°. In this way the gunpowder is covered by a coat of varnish easy of ignition and insoluble in water, which cannot therefore penetrate to the gunpowder, the explosive nature of which is rather augmented than diminished by this treatment. An ethereal solution of guncotton does not answer so well for this purpose, nor is it so manageable. I have not ascertained how far this new substance is useful in retaining the edges of wounds in approximation, but its alcoholic solution merits a trial. The following is the method which I have found most successful in the manufacture of this compound.

"Mix together sixteen parts of concentrated sulphuric acid and eight parts of nitric acid, specific gravity 1·50; place the mixture in cold water, and when the temperature has fallen to 60° or less, stir in one part of finely-powdered sugar, which will become pasty in a few seconds, and is then to be removed and plunged in cold water, when more sugar may then be added to the acid mixture, and removed as before. The compound is to be washed in water and dissolved in alcohol, to which a solution of carbonate of potash must be added in excess, so as to precipitate the substance, and neutralise its uncombined acid. After careful washing with water it is again to be dissolved in alcohol or ether, and cautiously evaporated to dryness by a steam heat, which must be continued for some time, so as entirely to expel the alcohol or ether. The residuary matter should have the transparency and general character of common resin."—*Ure.*

COMBUSTION. (Eng. and Fr.; *Verbrennung*, Germ.) The phenomena of the development of light and heat from any body, as from charcoal combining with the oxygen of the air, from phosphorus combining with iodine, and from some of the metals combining with chlorine. Combustion may be exerted with very various degrees of energy. We have a low combustion often established in masses of vegetable matter; as in hay-stacks, or in heaps of damp sawdust. In these cases, the changes going on are the same in character, only varying in degree, as those presented by an ordinary fire, or by a burning taper—oxygen is combining with carbon to form carbonic acid. The heat thus produced (the process has been termed by Liebig *Eremacausis*), increasing in force, gives rise eventually to visible combustion.

Cases of spontaneous combustion are by no means uncommon. Some years since, the editor investigated the conditions under which H. M. ships, the "Imogen" and "Talavera" were burnt in Devonport Dockyard, and he was enabled to trace the fire to a large bin, in which there had been allowed to accumulate a mass of oiled oakum, pieces of old flannel covered with anti-attrition, sawdust, shavings, and the sweepings of the painter's, wheelwright's, and some other shops.

The subject of combustion belongs to Watts' "Dictionary of Chemistry," where it is fully treated.

CONCRETE. The name given by architects to a compact mass of pebbles, sand, and lime, cemented together in order to form the foundation of buildings. Semple says that the best proportions are 80 parts of pebbles, each about 7 or 8 oz. in weight, 40 parts sharp river sand, and 10 of lime: the last is to be mixed with water to a thinnish consistence, and grouted in. It has been found that Thames ballast, as taken from the bed of the river, consists of nearly 2 parts of pebbles to 1 of

Digitized by Google

sand, and therefore answers exceedingly well for making concrete, with from one-seventh to one-eighth part of lime. The best mode of making concrete, according to Mr. Godwin, is to mix lime, previously ground, with the ballast in a dry state; sufficient water is now thrown over it to effect a perfect mixture; after which it should be turned over at least twice with shovels, or oftener; then put into barrows, and wheeled away for use instantly. It is generally found advisable to employ two sets of men to perform this operation, with three sets in each set, and they repeating the process, turn over the concrete to the barrow-men. After being put into the barrows, it should be at once wheeled up planks so raised as to give it a fall of some yards, and thrown into the foundation, by which means the particles are driven closer together, and greater solidity is given to the whole mass. Soon after being thrown in, the mixture is observed usually to be in commotion, and much heat is evolved, with a copious emission of vapour. The barrow-load of concrete in the fall spreading over the ground will form generally a stratum of from 7 to 9 inches thick, which should be allowed to set before throwing in a second.

Another method of making concrete, is first to cover the foundation with a certain quantity of water, and then to throw in the dry mixture of ballast and lime. It is next turned and levelled with shovels; after which more water is pumped in and the operation is repeated. The former method is undoubtedly preferable. In some cases it has been found necessary to mix the ingredients in a pug-mill, as in mixing clay, &c., for bricks. For the preparation of a concrete foundation, as the hardening should be rapid, no more water should be used than is absolutely necessary to effect a perfect mixture of the ingredients. Hot water accelerates the induration. There is about one-fifth contraction in volume in the concrete, in reference to the bulk of its ingredients. To form a cubical yard of concrete, about 30 ft. cube of ballast of 3½ ft. cube of ground lime must be employed, with a sufficient quantity of water.

Several other methods have been adopted by builders and engineers: these, however, involve the same principles and general condition; a detail of them is, therefore, unnecessary in this work. The reader desiring information, is referred to works especially devoted to engineering and building. See HYDRAULIC LIME.

CONDY'S DISINFECTING SOLUTION. See MANGANATES.

CONFECTIONARY. See SWEETMEATS.

CONGELATION. (Eng. and Fr.; *Gefrierung*, Germ.) The act of freezing liquids. The processes employed are chiefly chemical, but some are mechanical. These will have further attention under the heads FREEZING MIXTURES, ICE, ICE MANUFACTURE.

CONICHALCITE. An arseniate and phosphate of copper found in Andalusia.

CONIFERÆ. The natural order of cone-bearing plants, including some of the most important trees. All kinds of fir, cedar, juniper, pine, sarvin, cypress, &c., belong to this order.

CONIINE. $C^{16}H^{15}N$. A volatile base found in hemlock. *Conium maculatum*. It is supposed to be the cause of the poisonous properties of that plant.

CONIMA. A fragrant resin used for making pastiles. It is extracted from the *Hyawa* or incense tree which grows in British Guiana.

COOLING FLUIDS. See REFRIGERATORY.

COPAL, a resin which exudes spontaneously from two trees, the *Rhus copallinum*, and the *Elæocarpus copalifer*, the first of which grows in America, and the second in the East Indies. A third species is said to grow on the banks of some rivers, and near the coasts, of Guinea.

Much information has been received of late years from various sources concerning this somewhat ill-understood product. It is now known that there are three different kinds of copal in commerce, but nothing is known of their distinguishing characteristics. We have East Indian and West Indian copal, and, under the latter name, two very different substances. The East Indian, called also African, is more colourless, soft, and transparent, than the others; it forms a fine surface, and when heated emits an agreeable odour. It furnishes the finest varnish; fresh essence of turpentine dissolves it completely, but not old. Essence digested upon sulphur will dissolve double its own weight, without letting any fall. Fresh rectified oil of rosemary will dissolve it in any proportion, but if the oil is thickened by age it serves only to swell this copal.

When cautiously melted, it may be then dissolved in good essence of turpentine in any proportion, producing a fine varnish of little colour.

A good varnish may be made by dissolving 1 part of copal, 1 of essence of rosemary, with from 2 to 3 of pure alcohol. This varnish should be applied hot, and when cold, becomes very hard and durable.

The West Indian species, or American, comes to us not in lumps of a globular form, but in small flat fragments, which are hard, rough, and without taste or smell. It is usually yellow, and never colourless like the other. Insects are very rarely found in

Digitized by Google

it. It comes from the Antilles, Mexico, and North America. It will not dissolve in essence of rosemary.

The third kind of copal, known also as West Indian, was formerly sold as a product of the East Indies. It is found in fragments of a concavo-convex form, the outer covering of which appears to have been removed. It contains many insects. When rubbed it emits an aromatic odour. It gives out much ethereous and epyreumatic oil when melted. It forms a soft varnish, which dries slowly.

Fusel oil, or amyle spirit, has been lately used as a solvent of the hard copal; but it does not dry into a very solid varnish.

In 1863 we imported of copal 8,073 cwts. of the computed real value of 37,606*l.*; in 1864, 7,475 cwts. of the computed real value of 28,450*l.*

COPEY. The wood of the *Clusia rosea* used for dyeing.

COPPER is one of the metals most anciently known. It was named from the island of Cyprus, where it was extensively mined and smelted by the Greeks. It has a reddish-brown colour inclining to yellow; a faint but nauseous and disagreeable taste; and when rubbed between the fingers imparts a smell somewhat analogous to its taste. Its specific gravity is from 8·8 to 8·9. It is much more malleable than it is ductile; so that far finer leaves may be obtained from it than wire. It melts at the 27th degree of Wedgewood's pyrometer, and at a higher temperature it evaporates in fumes which tinge flame of a bluish green. By exposure to heat with access of air, it is rapidly converted into black scales of peroxide. In tenacity it yields to iron; but considerably surpasses gold, silver, and platinum, in this respect.

In mineralogy, the genus copper includes about 13 different species, and each of these contains a great many varieties. These ores do not possess any one general exterior character by which they may be recognised; but they are readily distinguished by chemical reagents Water of ammonia digested upon any of the cupreous ores in a pulverised state, after they have been calcined either alone or with nitre, assumes an intense blue colour, indicative of copper. The richest of the ordinary ores appear under two aspects; the first class has a metallic lustre, a copper red, brass yellow, iron grey, or blackish grey colour, sometimes inclining to blue; the second is without metallic appearance, has a red colour, verging upon purple, blue, or green, the last tint being the most usual. Few copper ores are to be met with, indeed, which do not betray the presence of this metal by more or less of a greenish film.

Dr. Scherer, of Freyberg, has arranged the ores of copper as follows:—

	Copper in 100.
1. Kupferglanz (*Kupferglaserz*), Cu^2S	79·7
2. Kupferkies, Copper pyrites, Cu^2S, Fe^2S^3	34·8
3 Buntkupfererz, $3Cu^2S$, Fe^2S^3	55·7
4. Fahlerz, $4(Cu^2S, FeS, ZnS, AgS)$ (SbS_3, AsS^3)	14—41
5. Rothkupfererz, Cu^2O	88·5
6. Malachit, $2CuO,CO^2 + HO$	57·4
7. Kupferlasur, $2(CuO,CO^2) + CuO,HO$	55·3

Both Fahlerz and Buntkupfererz vary greatly in their proportion of copper. Fahlerz is very difficult to convert into pure copper by smelting, on account of the presence of antimony and arsenic. Kupferglanz is a disulphide of copper. Buntkupfererz is purple or variegated copper ore. Rothkupfererz is the red oxide of copper. Kupferlasur is blue carbonate of copper.

Pure copper may be obtained in the solid state either by the reduction of the pure oxide by a stream of hydrogen gas passed over it in an ignited tube, or by the Electrotype process. See ELECTRO-METALLURGY.

1. *Native Copper* occurs in crystals, branches and filaments, its most common locality being in primitive rocks. It is found abundantly in Siberia, at the mines of Tourinski, in those of Hungary, of Fundo-Moldavia in Gallicia, of Fahlun in Sweden, in Cornwall, and in very large quantities in the mines of Lake Superior U.S. of America, &c. The gangues of native copper are granite, gneiss, mica-slate, clay-slate, quartz, carbonate or fluate of lime, sulphate of barytes, amygdaloidal trap, &c. The most remarkable masses of native copper hitherto discovered are those found in the mines of Lake Superior, some of which have exceeded 150 tons in weight.

2. *Sulphide* or *Sulphuret of Copper.* The texture of this ore is compact: its fracture conchoidal; surface sometimes dull; colour, iron black or lead gray, often bluish, iridescent, or reddish from a mixture of oxide. It is easily melted even by the heat of a candle; but is more difficult of reduction than protoxide. This ore yields to the knife, assuming a metallic lustre when cut. Its density varies from 4·8 to 5·34. Its composition according to Klaproth is 78·5 copper, 18·5 sulphur, with a little iron and silica. Its theoretical constitution is 80 copper, 20 sulphur = 100; whence 78·5 of metal should be associated with 19 6 of sulphur. This is, therefore, one of the richest ores, and forms very important veins. It is to be found in all considerable

Digitized by Google

copper districts; in Siberia, Saxony, Sweden, and especially Cornwall, where the finest crystals occur.

3. *Copper Pyrites*, resembles in its metallic yellow hue, sulphide of iron; but the latter is less pale, harder, and strikes fire easily with steel. It sometimes presents the most lively rainbow colours. Its specific gravity is 4·3. It generally contains a good deal of iron, as the following analysis will show: copper 30, sulphur 37, iron 33, in 100 parts. According to Hisinger, the Swedish pyrites contains 63 of copper, 12 of iron, and 25 of sulphur. These ores occur in vast masses and extended veins, in primitive and transition districts; and are commonly accompanied with grey copper, sulphide of iron, sparry iron, sulphides of lead and zinc.

4. *Grey Copper* has a steel-grey colour, more or less deep, either shining or dull; fracture uneven; a distinct metallic lustre; difficult of fusion at the blowpipe; it communicates to glass of borax a yellowish-red colour. Its density in crystals is 4·86. Its composition is very variable; consisting essentially of copper, iron, antimony, and sulphur. The exploration of this ore is frequently profitable in consequence of the silver which it contains. It occurs in primitive mountains; and is often accompanied by red silver ore, copper pyrites, and crystallised quartz.

5. *Suboxide of Copper* or *red oxide of Copper:* its colour is a deep red, sometimes very lively, especially when bruised. It is friable, difficult of fusion at the blowpipe, reducible on burning charcoal, soluble with effervescence in nitric acid, forming a green liquid. Its constitution, when pure, is 88·9 copper, 11·1 oxygen = 100.

6. *Black oxide of Copper* is of a velvet black, inclining sometimes to brown or blue; and acquires the metallic lustre on being rubbed. It is infusible at the blowpipe. Its composition is, copper 80, oxygen 20; being a true protoxide.

7. *Hydrosilicate of Copper* consists essentially of oxide of copper, silica, and water. Its colour is green; and its fracture is conchoidal, with a resinous lustre, like most minerals containing water. Its specific gravity is 2·73. It is infusible at the blowpipe alone, but melts easily with borax.

8. *Dioptase Copper*, or *Emerald Malachite;* a beautiful but rare cupreous mineral, consisting of oxide of copper, carbonate of lime, silica, and water in varying proportions.

9. *Carbonate of Copper, Malachite;* is of a blue or green colour. The former variety often occurs in beautiful crystals.

10. *Sulphate of Copper, Blue Vitriol*, is similar to the artificial salt of the laboratory. The blue water which flows from certain copper mines, is a solution of this salt. The copper is easily procured in the metallic state by plunging into it pieces of iron.

11. *Phosphate of Copper* is of an emerald green, or verdigris colour, with some spots of black. It presents fibrous or tuberculous masses with a silky lustre in the fracture. It dissolves in nitric acid without effervescence, forming a blue liquid: melts at the blowpipe, and is reducible on charcoal, with the aid of a little grease, into a metallic globule. Its powder does not colour flame green, like the powder of chloride of copper.

12. *Chloride of Copper*, is green of various shades; its powder imparts to flame a remarkable blue and green colour. It dissolves in nitric acid without effervescence; and is easily reduced before the blowpipe. Its density is 3·5. By Klaproth's analysis it consists of:—

Chlorine	15·90
Copper	14·22
Oxide of Copper	54·22
Water	14·16
Impurities	1·50
	100·00

13. *Arseniate of Copper.* It occurs frequently in crystals. Before the blowpipe it melts, exhaling fumes of a garlic odour, and affords metallic globules when in contact with charcoal.

We shall here give a brief account of two cupreous formations, interesting in a geological point of view; that of the copper slates of Mansfeldt, and of the copper veins of Cornwall.

The curious strata of bituminous schist in the first of these localities, are among the most ancient of any containing the exuviæ of organised bodies not testaceous. From among their tabular slabs the vast multitudes of fossil fish are extracted which have rendered the cantons of Mansfeldt, Eisleben, Ilmenau, and other places in Thuringia and Voigtland so celebrated. Many of the fish are transformed into copper pyrites. Here, also, have been found the fossil remains of the lizard family, called *Monitors*.

Such is the influence of a wise administration upon the prosperity of these mines, that a thin layer of slate in this formation, of which 100 pounds commonly contain but one

Digitized by Google

pound and a half of copper, occasionally argentiferous, has been for several centuries the object of smelting works of the greatest importance to the adjoining country.

The frequent derangements which this deposit experiences, led, at an early period, skilful directors of the under-ground operations to study the order of super-position of the accompanying rocks. From their observations, resulted a system of facts which has served to guide miners, not only in the country of Mansfeldt, but over a great portion of Germany, and in other countries where the same series of rocks, forming the envelope of the cupreous schists, are found to occur in the same order of super-position.

Of the English Copper Veins. — The deposits of copper in Cornwall occur as veins in granite, or in the schistose rocks which surround and cover it; and hence, the Cornish miners work mostly in the granite and clay-slate; the former of which, when metalliferous, is usually in a coarse and often a disintegrated state: this they call *growan*, the latter *killas*.

Copper veins are abundant in killas and more rare in granite; but most numerous near the line of junction of the two rocks. The different kinds of mineral veins in Cornwall may be classed as follows:—

1. Veins of elvan; elvan courses, or elvan channels.
2. Tin veins, or *tin lodes*.
3. Copper veins generally running east and west.
4. Second system of copper veins, or *contra lodes*.
5. Crossing veins; cross courses.
6. Clay veins called *Cross-Flookans* or *Slides*.

The width of these veins does not often exceed 6 feet, though occasional enlargements to the extent of 12 or more feet sometimes take place. Their length is unknown, but one explored in the *United Mines* has been traced over an extent of seven miles. The gangue of these veins is generally quartz, either pure, or mixed with green particles analogous to chlorite. They contain iron pyrites, blende, sulphide, and several other compounds of copper, such as the carbonate, phosphate, arseniate, chloride, &c. The most part of the copper lodes are accompanied by small argillaceous veins, called by the miners *flookans of the lode*. These are often found on both sides of the vein, so as to form cheeks or *walls*.

When two veins intersect each other, the direction of the one thrown out becomes an object of interest to the miner. In Saxony it is regarded as a general fact that the rejected portion is always on the side of the *obtuse angle;* this also holds generally in Cornwall, and the more obtuse the angle of incidence, the more considerable the heave.

The great copper vein of *Carharack*, in the parish of Gwennap, is an instructive example of intersection. The width of this vein is 8 feet; it runs nearly from east to west, and dips towards the north at an inclination of 2 feet in a fathom. Its upper part is in the killas, its lower in granite. This vein has suffered two intersections; the first results from encountering the vein called *Steven's flookan*, which runs from north-east to south-west, throwing it out several fathoms. The second has been caused by another vein, almost at right angles to the first, and which has heaved it 20 fathoms to the right. The throw of the vein occurs, therefore, in one case to the right, and in the other to the left; but in both instances, it is to the side of the obtuse angle. This disposition is very singular; for one portion of the vein appears to have ascended, while another has sunk. See FAULTS.

The copper mines of the isle of Anglesea, those of North Wales, of Westmoreland, the adjacent parts of Lancashire and Cumberland, of the south-west of Scotland, of the Isle of Man, and of the south-east of Ireland, also occur in primitive or transition rocks. The ores lie sometimes in masses, but more frequently in veins. The mine of Ecton in Staffordshire, and that of Cross-gill-burn, near Alston-moor in Cumberland, occur in transition or mountain limestone.

The copper ores extracted both from the granitic and schistose localities, as well as from the calcareous, are uniformly copper pyrites more or less mixed with mundic; the red oxide, carbonate, arseniate, phosphate, and chloride of copper, are very rare in these districts.

The working of copper-mines in the isle of Anglesea may be traced to a very remote era. It appears that the Romans were acquainted with the Amlwch mine near Holyhead; but it was worked with little activity till about 70 years since. This deposit lies in a greenish clay slate, passing into talc slate; a rock associated with serpentine and euphotide. The veins of copper are from one to two yards thick; and converge towards a point where their union forms a considerable mass of ore. On this the mine was first commenced by an open excavation, which is now upwards of 300 feet deep, and appears from above like a vast funnel. Galleries are formed at different levels upon the flanks of the excavation to follow the several smaller veins, which run in all directions, and diverge from a common centre like so many radii.

Digitized by Google

The ore receives in these galleries a kind of sorting, and is raised by means of hand windlasses, to the summit of a hill, where it is cleaned by breaking and jigging.

The water is so scanty in this mine that it is pumped up by a small steam-engine. A great proportion of it is charged with sulphate of copper. It is conveyed into reservoirs containing pieces of old iron; the sulphate is thus decomposed into copper of cementation. The Anglesea ore is poor, yielding only from 2 to 3 *per cent.* of copper; a portion of its sulphur is collected in roasting the ore.

The copper mines, now so important, were so little worked until a recent period, that in 1799 we are told in a Report on the Cornish mines, "it was not until the beginning of the last century that copper was discovered in Britain." This is not correct, for in 1250 a copper mine was worked near Keswick, in Cumberland. Edward III. granted an indenture to John Ballanter and Walter Bolbolter, for working all "mines of gold, silver, and copper;" but that the quantity found was very small is proved from the fact that Acts of Parliament were passed in the reigns of Henry VIII. and Edward VI. to prevent the exportation of brass and copper, "lest there should not be metal enough left in the kingdom, fit for making guns and other engines of war, and for household utensils:" and in 1665 the calamine works were encouraged by the Government, as "the continuing these works in England will occasion plenty of rough copper to be brought in."

At the end of the seventeenth century, some "gentlemen from Bristol made it their business to inspect the Cornish mines, and bought the copper ore for 2*l.* 10*s.* per ton, and scarce ever more than 4*l.* a ton."

In 1700, one Mr. John Costor introduced an hydraulic engine into Cornwall, by which he succeeded in draining the mines, and "he taught the people of Cornwall also a better way of assaying and dressing the ore."

The value and importance of copper mines since that period has been regularly increasing.

Mechanical Preparation of the Copper Ores in Cornwall. — The ore receives a first sorting, the object of which is to separate all the pieces larger than a walnut; after which the whole is sorted into lots, according to their relative richness. The fragments of poor ore are sometimes pounded in stamps, so that the metallic portions may be separated by washing.

The rich ore is either broken into small bits, with a flat beater, or by means of a crushing-mill. The ore to be broken by the *bucking iron* is placed upon plates of cast-iron; each about 16 inches square and 1½ inch thick. These plates are set towards the edge of a small mound about a yard high, constructed with dry stones rammed with earth. The upper surface of this mound is a little inclined from behind forwards. The work is performed by women, each furnished with a bucking-iron: the ore is placed in front of them beyond the plates; they break it, and strew it at their feet, whence it is removed and disposed of as may be subsequently required.

The crushing-mill has of late years been brought to a great degree of perfection, and is almost universally made use of for pulverising certain descriptions of ore. For a description of this apparatus, see GRINDING AND CRUSHING APPARATUS.

Stamping-mills are less frequently employed than crushers for the reduction of copper ores. At the Devon Great Consols Mines, the concentration of the crushed copper ores is effected in the following manner: — From the crushing-mill the stuff is carried by a stream of water into a series of revolving separating sieves, where it is divided into fragments of $\frac{1}{10}$th inch, $\frac{1}{19}$th inch, and $\frac{1}{70}$th inch diameter, besides the coarser particles which escape at the lower end of the sieves. The slimes flow over a small water-wheel called a *separator*, in the buckets of which the coarser portions settle, and are from thence washed out by means of jets of water into a round buddle, whilst the finer particles are retained in suspension, and are carried off into a series of slime-pits, where they are allowed to settle.

The *work* produced by the round buddle is of three sorts; that nearest the circumference is the least charged with iron pyrites, or any other heavy material, but still contains a certain portion of ore, this is again buddled, when a portion of its *tail* is thrown away, and after submitting the remainder to a buddling operation, and separating the *waste*, it is jigged in a fine sieve, and rendered merchantable.

The other portions of the first buddle are rebuddled, and after separating the waste, the orey matters are introduced into sizing cisterns, from which the finer particles are made to flow over into a buddle, from whence a considerable portion goes directly to market. That which requires further manipulation is again buddled until thoroughly cleansed. The coarser portions of the stuff introduced into the sizing cisterns pass downward with a current of water into the *tye*, and after repeated projections against the stream, the orey matter is separated, leaving a residue of mundic in a nearly pure state.

The stuff falling from the lower extremities of the separating sieves is received

Digitized by Google

into bins and subsequently cleansed, each of the three sizes is jigged, and in proportion as the worthless matters are separated, they are scraped off and removed. Those portions of the stuff that require further treatment are taken from the sieves, washed down from behind the hutches, and treated by tyes, until all the valuable portions have been extracted.

In this way vein stuff that originally contained but 1½ per cent of copper is so concentrated, as to afford a metallic yield of 10 per cent., whilst by means of sizing-sieves, dressing-wheels, jigging-machines, and round-buddles, &c., from 40 to 50 tons of stuff are elaborated per day of 9 hours, at a cost of 12*s.* per ton of dressed ore.

Captain Richards, the agent of these mines, has also introduced considerable improvements in the slime-dressing department. The proper sizing of slime is as necessary as in the case of rougher work, and in order to effect this, he has arranged a slime-pit, which answers this purpose exceedingly well. This pit has the form of an inverted cone, and receives the slimes from the slime-separator, in an equally divided stream. The surface of this apparatus being perfectly level, and the water passing through it at a very slow rate, all the valuable matters are deposited at the bottom. If slime be valuable in the mass, it can evidently be more economically treated by a direct subdivision into fine and coarser work; since a stream of water, acting on a mixture of this kind, will necessarily carry off an undue proportion of the former in freeing the latter from the waste with which it is contaminated.

The ordinary slime-pit is of a rectangular form, with vertical sides, and flat bottom. The water enters it at one of the ends by a narrow channel, and leaves it at the other. A strong central current is thus produced through the pit, which not only carries with it a portion of valuable slime, but also produces eddies and creates currents towards the edges of the pit, and thus retains matters which should have been rejected. The slime-pits at Devon Consols are connected with sets of Brunton's machines, which are thus kept regularly supplied by means of a launder from the apex of the inverted cone, through which the flow is regulated by means of a plug-valve and screw.

A waggon cistern is placed under each frame for receiving the work, which is removed when necessary, and placed in a packing-kieve. This is packed by machinery, set in motion by a small water-wheel. The waste resulting from this operation is either entirely rejected, or partially reworked on Brunton's machines, whilst the orey matters contained in the kieve, are removed by a waggon to the ore-house where they are discharged.

Cornwall being destitute of coal, the whole of the copper ore which it produces is sent for smelting to South Wales.

The furnaces employed are of the reverberatory construction; they vary in their dimensions and in the number of their openings according to the operations for which they were intended. There are 5 of them:—1. The calcining furnace, or calciner; 2. The melting furnace; 3. The roasting furnace, or roaster; 4. The refining furnace; 5. The heating or igniting furnace.

1. *The Calcining Furnace* rests upon a vault, c, into which the ore is raked down after being calcined; it is built with bricks, and bound by iron bars, as shown in the elevation, *fig.* 558. The hearth, B B, *figs.* 559 and 560, is placed upon a level with

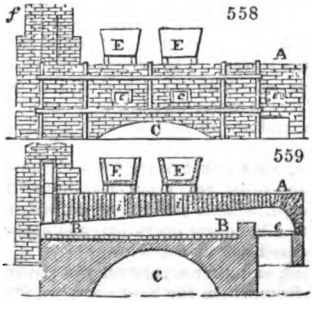

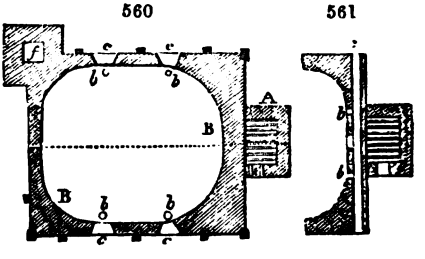

the lower horizontal binding bar, and has nearly the form of an ellipse, truncated at the two extremities of its greater axis. It is horizontal, bedded with fire-bricks set on edge, so that it may be removed and repaired without disturbing the arch upon which it reposes. Holes, not visible in the figure, are left in the sole before each door *c c*, through which the roasted ore is let fall into the subjacent vault. The dimensions of the hearth B B, vary from 17 to 19 feet in length, and from 14 to 16 in breadth. The fire-place A, *fig.* 560, is from 4½ to 5 feet long, and 3 feet wide. The

Digitized by Google

bridge or low wall *b*, *fig.* 561, which separates the fire-place from the hearth, is 2 feet thick, and in Messrs. Vivians' smelting-works is hollow, as shown in the figure, and communicates at its two ends with the atmosphere, in order to conduct a supply of fresh air to the hearth of the furnace. This judicious contrivance will be described in explaining the *roasting* operation. The arched roof of the furnace slopes down from the bridge to the beginning of the chimney *f*, *fig.* 558, 560, its height above the hearth being at the first point about 26 inches, and from 8 to 12 at the second.

Such calcining furnaces have 5 doors, *c c c c*, *fig.* 560, and one for the fire-place, as shown at the right hand in *fig.* 558; 4 are for working the ore upon the reverberatory hearth. These openings are 12 inches square, and are bound with iron frames. The chimney is about 22 feet high, and is placed at one angle of the hearth, as at *f*, *fig.* 560, being joined by an inclined flue to the furnace.

For charging it with ore, two hoppers E E, are usually placed above the upper part of the vault, in a line with the doors; they are formed of four plates of iron, supported in an iron frame. Beneath each is an orifice for letting the ore down into the hearth.

These furnaces serve for calcining the ore, and *matts:* for the latter purpose, indeed, furnaces of two stories are sometimes employed, as represented in *fig.* 564. The dimensions of each floor in this case are a little less than the preceding. Two doors, *c c*, correspond to each hearth, and the workmen, while employed at the upper story, stand upon a raised movable platform.

2. *Melting Furnace*, *figs.* 562 and 563.—The form of the hearth is, in this case, also elliptical, but the dimensions are smaller than in the calcining furnace. The length does not exceed 11 or 11½ feet, and the breadth varies from 7 to 8. The fire-place is, however, larger in proportion, its length being from 3½ to 4 feet, and its breadth from 3 to 3½; this size being requisite to produce the high temperature of the furnace. It has fewer openings, there being commonly three; one to the fire-place at D, a second one, O, in the side, kept generally shut, and used only when incrustations need to be scraped off the hearth, or when the furnace is to be entered for repairs; and the third or working door, G, placed on the front of the furnace beneath the chimney. Through it, the scoriæ are raked out, and the melted matters stirred and puddled, &c.

562, 563

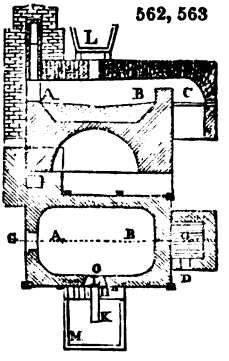

The hearth is bedded with infusible sand, and slopes slightly towards the side door, to facilitate the discharge of the metal. Above this door is a hole in the wall of the chimney (*fig.* 563) for letting the metal escape. An iron gutter, O, leads it into a pit, K, bottomed with an iron receiving-pot, which may be lifted out by a crane. The pit, M, is filled with water, and the metal becomes granulated as it falls into the receiver. These melting furnaces are surmounted by a hopper L, as shown *fig.* 562.

Melting furnaces are sometimes also used for calcination. Some of those near Swansea, serve this double purpose; they are composed of 3 floors (*fig.* 564). The floor A, is destined for melting the calcined ore; the other two, B, C, serve for calcination. The heat being less powerful, upon the upper sole C, the ore gets dried upon it, and begins to be calcined—a process completed on the next floor. Square holes, *d*, left in the hearths B and C, put them in communication with each other, and with the lower one A; these perforations are shut during the operation by a sheet of iron, removable at pleasure.

564

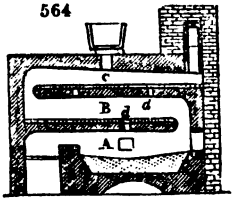

The hearths B and C, are made of bricks; these are horizontal at the top and slightly vaulted beneath; they are two bricks thick, and their dimensions larger than those of the inferior hearth, as they extend above the fire-place. On the floors destined for calcination the furnace has two doors on one of its sides: on the lower story there are also two; but they are differently placed The first, being in the front of the furnace, serves for drawing off the scoriæ, for working the metal, &c; and the second, upon the side, admits the workmen to make necessary repairs. Below this door is placed the discharge or tap-hole, which communicates by a cast-iron gutter with a pit filled with water. The dimensions of this furnace in length and breadth are nearly the same as those of the melting furnace above described; the total height is nearly 12 feet. It is charged by means either of one or two hoppers.

3. *Roasting Furnace*.—The furnaces employed for this purpose are in general similar to the calciners; but in the smelting-works of Messrs. Vivian, the furnaces above

Digitized by Google

alluded to, present a peculiar construction ; this is for the purpose of introducing a continuous current of air upon the metal, in order to facilitate its oxidation. This process was originally invented by Mr. Sheffield, who disposed of his patent right to Messrs. Vivian.

The air is admitted by a channel through the middle of the fire-bridge, which extends all its length ; it communicates with the atmosphere at its two extremities, whilst square holes, left at right angles to this channel, conduct the air into the furnace. This very simple construction produces a powerful effect in the roasting. It not only promotes the oxidation of the metals, but burns the smoke, and assists in the vaporisation of the sulphur ; while by keeping the bridge cool it preserves it from wasting, and secures uniformity of temperature to the hearth.

4. *Refining Furnace.*—In this, as in the melting furnace, the side slopes towards the front door instead of the side doors, because in the refining furnace the copper collects in a cavity formed in the hearth near the front door, from which it is lifted out by ladles ; whereas, in the melting furnaces, the metal is run out by a tap-hole in the side. The sole is laid with sand ; but the roof is higher than in the melting furnace, being from 32 to 36 inches in height. If the top arch were too much depressed, there might be produced upon the surface of the metal a layer of oxide very prejudicial to the quality of the copper. In that case, when the metal is run out, its surface solidifies and cracks, while the melted copper beneath breaks through and spreads irregularly over the cake. This accident, called the *rising of the copper*, prevents it from being laminated, and requires it to be exposed to a fresh refining process, when lead must be added to remove the oxide of copper. This is the only occasion upon which the addition of lead is proper in refining copper. When the metal to be refined is mixed with others, particularly with tin, as in extracting copper from old bells, then very wide furnaces must be employed, to expose the metallic bath on a great surface, and in a thin stratum, to the oxidising action of the air.

The door, on the side of the refining furnace, is very large, and shuts with a framed brick door, balanced by a counter-weight.

5. *Heating Furnaces*, being destined to heat the pigs or bars of copper to be laminated, as well as the copper sheets themselves, are made much longer in proportion to their breadth. Their hearth is horizontal, the vault not much depressed ; they have only one door, placed upon the side, but which extends nearly the whole length of the furnace ; this door may be raised by means of a counter-weight, in the same way as in the furnaces for the fabrication of sheet-iron and brass.

Series of Operations to which the Ore is subjected.

The ores which are smelted in the Swansea works are cupreous pyrites, more or less mingled with *gangue* (vein-stone). This pyrites is composed of nearly equal proportions of sulphide of copper and sulphide of iron.

The earthy matters which accompany the pyrites are usually siliceous, though in some mines the mineral is mixed with clay or fluor-spar. Along with these substances, tin and arsenical pyrites occasionally occur with the copper ; and though these two metals are not chemically combined, yet they cannot be entirely separated by mechanical preparation. The constituent parts of the ore prepared for smelting are, therefore, copper, iron, and sulphur, with earthy matters, and, in some cases, tin and arsenic. The different ores are mixed in such proportions that the average metallic contents may amount to 8 per cent. The smelting process consists in alternate roastings and fusions.

In the roasting operation the volatile substances are mostly disengaged in the gaseous state, while the metals that possess a strong affinity for oxygen become oxidised. In the fusion the earthy substances combine with these oxides, and form glassy scoriæ or slags, which float upon the surface of the melted metal.

These calcinations and fusions take place in the following order :—

1. Calcination of the ore. 2. Fusion of the calcined ore. 3. Calcination of coarse metal. 4. Melting the calcined coarse metal. 5. Calcination of fine metal (second matt). 6. Melting calcined fine metal. 7. Roasting coarse copper. In some smelting-works, this roasting is repeated four times ; in which case a calcination and a melting are omitted. In other works, however, a saving is made without increasing the number of roastings. 8. Refining or toughening the copper.

Besides these operations which constitute the treatment of copper properly speaking, two others are sometimes performed, in which only the scoriæ are smelted. These may be designated by the letters *a* and *b*. *a* is the re-melting of a portion of the scoriæ of the second process, which contain some metallic granulations. *b* is a particular melting of the scoriæ of the fourth operation. This fusion is intended to

Digitized by Google

concentrate the particles of copper in the scoriæ, and is not practised in all smelting-works.

First Operation. Calcination of the Ore.—The different ores, on arriving from Cornwall and other localities where they are mined, are discharged in continuous cargoes at the smelting works, in such a way, that by taking out a portion from several heaps at a time, a tolerably uniform mixture is obtained; which is very essential, since the ores, being different in quality and contents, act as fluxes for each other. The mixed ore is transported to the works in wooden measures each holding a hundred-weight. The workmen entrusted with the calcination convey the ore into the hoppers of the calcining furnace, whence it falls into the hearth; other workmen spread it uniformly on the surface with iron rakes. The charge of a furnace is from 3 tons to 3½ tons. Fire is applied and gradually increased, till towards the end of the operation, the temperature is as high as the ore can support without melting or agglutinating. To prevent this running together, and to aid the extrication of the sulphur, the surfaces are renewed, by stirring up the ore at the end of every hour. The calcination is usually completed at the end of 12 hours, when the ore is raked into the arch under the sole of the furnace, and when cold enough to be moved, is taken out of the arch, and conveyed to the calcined heap.

The ore in this process scarcely changes weight, having gained by oxidation nearly as much as it has lost in sulphur and arsenic; and if the roasting has been rightly managed, the ore is in a black powder, owing to the oxides present.

Second Operation. Fusion of the calcined Ore.—The calcined ore is likewise given to the smelters in measures containing a hundred-weight. They throw it into hoppers, and after it has fallen on the hearth, spread it uniformly. They then let down the door, and lute it tightly. In this fusion there are added about 2 cwt. of scoriæ proceeding from the melting of the calcined matt, to be afterwards described. The object of this addition is not only to extract the copper that these scoriæ may contain, but also to increase the fusibility of the mixture. Sometimes, when the composition of the ore requires it, lime, sand, or fluor-spar is added, more particularly the latter.

The furnace being charged, fire is applied, and the sole care of the founder is to keep up the heat so as to have a perfect fusion; the workman then opens the door, and stirs about the liquid mass to complete the separation of the metal (or rather of the matt) from the scoriæ, as well as to hinder the melted matter from sticking to the sole. The furnace being ready, that is, the fusion being perfect, the founder takes out the scoriæ by the front door, by means of a rake. When the matt is thus freed from the scoriæ, a second charge of calcined ore is introduced to increase the metallic bath; which second fusion is executed like the first. New charges of roasted ore are put in till the matt collected on the hearth rises to a level with the door-way, which happens commonly after the third charge. The tap hole is now opened and the matt flows out into a pit filled with water, where it is granulated and collects in the pan placed at the bottom. The granulated matt is next conveyed into the matt warehouse. The oxidation with which the grains get covered by the action of water, does not allow the proper shade of the matt or coarse metal to be distinguished; but in the bits which stick in the gutter, it is seen to be of a steel grey colour. Its fracture is compact, and its lustre metallic. The scoriæ often contain metallic grains; they are broken and picked with care. All the portions which include metallic particles are re-melted in an accessory process.

In this operation, the copper is concentrated by the separation of a great part of the matters with which it was combined. The granulated matt produced contains in general 33 per cent. of copper; it is therefore four times richer than the ore; and its mass is consequently diminished in that proportion. Its constituents are principally copper, iron, and sulphur.

The most important point in the fusion just described, is to make a fusible mixture of the earths and oxides, so that the matt of copper may, on account of its greater specific gravity, sink below and separate exactly from the slag. This is attained by means of metallic oxides contained in the scoriæ of the fourth operation, of which 2 cwt. were added to the charge. These consist almost entirely of oxide of iron. When the ores are very difficult to melt, about half a hundred-weight of fluor-spar is added; but this must be done with precaution, for fear of too much increasing the scoriæ.

The work proceeds day and night. Five charges are commonly put through in the course of 24 hours; but when all circumstances are favourable, that is to say, when the ore is fusible, when the fuel is of the first quality, and the furnace in good condition, even six charges a day have been despatched.

The charge is a ton and a half of calcined ore, so that a smelting furnace nearly corresponds to a calcining furnace; the latter turning out 7 tons of calcined ore in 24 hours.

The workmen are paid by the ton.

Digitized by Google

Third Operation. Calcination of coarse Metal. — The object of this operation is principally to oxidise the iron, which is more easily accomplished than in the first calcining, because the metal is now disengaged from the earthy substances, which screened it from the action of the air.

This calcination is executed in the furnace already represented in *figs.* 562, 563, 564, page 823, exactly in the same way as the ore was calcined. The metal must be perpetually stirred, to expose all its surfaces to the action of the hot air, and to hinder clotting together. The operation lasts 24 hours; during the first 6, the fire should be very moderate, and gradually increased to the end of the calcination. The charge is, like that of the first, 3½ tons.

Fourth Operation. Melting the calcined coarse Metal. — In the fusion of this first calcined matt, some scoriæ of the latter operations must be added, which are very rich in oxide of copper, and some crusts from the hearth, which are likewise impregnated with it. The proportion of these substances varies according to the quality of the calcined matt.

In this second fusion, the oxide of copper contained in the scoriæ is reduced by the affinity of the sulphur, one portion of which passes to the state of acid, while the other forms a subsulphide with the free copper. The matt commonly contains a sufficient quantity of sulphur to reduce the oxide of copper completely; but if not, which may happen if the calcination of the matt has been pushed too far, a small quantity of uncalcined matt must be introduced, which, by furnishing sulphur, diminishes the richness of the scoriæ, and facilitates the fusion.

The scoriæ are taken out by the front door by means of a rake. They have a great specific gravity; are brilliant with a metallic lustre, very crystalline, and present, in the cavities, crystals like those of pyroxene; they break easily into very sharp-edged fragments, and contain no granulated metal in the interior; but it sometimes occurs, on account of the small thicknesses of the stratum of scoriæ, that these carry off with them, when withdrawn, some metallic particles.

These scoriæ, as we have already stated (under *Fusion of the roasted Ore*), are in general melted with it. In some cases, however, a special melting is assigned to them.

The matt obtained in this second fusion is either run out into water like the first, or moulded into pigs (ingots), according to the mode of treatment which it is to undergo. This matt, termed by the smelters *fine metal* when it is granulated, and *blue metal* when it is in pigs, is of a light grey colour, compact, and bluish at the surface, and contains about 60 per cent. of copper.

(*b.*) *Particular Fusion of the Scoriæ of the fourth Operation.*—In re-melting these scoriæ, the object is to procure the copper which they contain. To effect this fusion, the scoriæ are mixed with pulverised coal, or other carbonaceous matters. The copper and several other metals are deoxidised, and furnish a white and brittle alloy. The scoriæ resulting from this melting are in part employed in the first melting, and in part thrown away. They are crystalline, and often present crystals in the cavities, which appear to belong to bisilicate of iron. They have a metallic lustre and break into very sharp-edged fragments. The white metal is melted again, and then united to the product of the second fusion.

Fifth Operation. Calcination of the second Matt, or fine Metal. — This is executed in precisely the same way as that of the first matt. It lasts 24 hours; and the charge is usually 3 tons.

Sixth Operation. Melting of the calcined fine Metal.—This fusion is conducted like that of the first matt. The black, or coarse copper, which it produces, contains from 70 to 80 per cent. of pure metal; it is run into ingots, in order to undergo the operation of roasting.

The scoriæ are rich in copper; they are added to the fusion of the calcined coarse metal of the fourth operation.

In many smelting houses, the fifth and sixth operations have of late years been omitted. The second matt is run into pigs, under the name of *blue metal*, to be immediately exposed to roasting.

The disposition of the canal *c c*, *fig.* 564, which introduces a continuous current of air to the hearth of the furnace, accelerates and facilitates the calcination of the matt; an advantage which has simplified the treatment, by diminishing the number of calcinations.

Seventh Operation. Roasting of the coarse Copper, the product of the sixth Operation. —The chief object of this operation is oxidation; it is performed either in an ordinary roasting furnace, or in one similar to *fig.* 564, which admits a constant current of air. The pigs of metal derived from the preceding melting are exposed, on the hearth of the furnace, to the action of the air, which oxidises the iron and other foreign metals with which the copper is still contaminated. The duration of the roasting varies from 12 to 24 hours, according to the degree of purity of the crude copper. The temperature

Digitized by Google

should be graduated in order that the oxidation may be complete, and that the volatile substances which the copper still retains may escape in the gaseous form. The fusion must take place only towards the end of the operation.

The charge varies from a ton and a quarter to a ton and a half. The metal obtained is run out into moulds of sand. It is covered with black blisters, like cementation steel; whence it has got the name of blistered copper. In the interior of these pigs the copper presents a porous texture, occasioned by the ebullition produced by the escape of gases during the moulding. The copper being now almost entirely freed from sulphur, iron, and the other substances with which it was combined, is in a fit state to be refined. This operation affords scoriæ, which are very heavy, and contain a great deal of oxide of copper, and sometimes even metallic copper.

These scoriæ, as well as those of the third melting and the refining, are added to the second fusion, as we have already stated, in describing the fourth operation.

In some works, the roasting is several times repeated upon the *blue metal*, in order to bring it to a state fit for refining. We shall subsequently notice this modification of the treatment.

Eighth Operation. Refining or Toughening.—The pigs of copper intended for refining are placed on the sole of the refining furnace through the door in the side. A slight heat is first given, to finish the roasting or oxidation, in case this operation has not already been pushed sufficiently far. The fire is to be increased by slow degrees, so that, by the end of six hours, the copper may begin to flow. When all the metal is melted, and the heat is very considerable, the workman lifts the door in the front, and withdraws with a rake the few scoriæ which may cover the copper bath. These are red, lamellated, very heavy, and closely resemble protoxide of copper.

The refiner then takes an assay with a small ladle, and when it cools, breaks it in a vice, to ascertain the state of the copper. From the appearance of the assay, the aspect of the bath, the state of the fire, &c., he judges if he may proceed to the toughening, and what quantity of wooden spars and wood-charcoal he must add to render the metal malleable, or, in the language of the smelters, bring it to the proper pitch. When the operation of refining begins, the copper is dry or brittle, and of a deep red colour approaching to purple. Its grain is coarse, open, and somewhat crystalline.

To execute the refining, the surface of the metal is covered with wood-charcoal, and stirred with a spar or rod of birch or other wood. The gases which escape from the wood occasion a brisk effervescence. More wood-charcoal is from time to time added, so that the surface of the metal may be always covered with it, and the stirring is continued until the operation of refining is finished; a circumstance indicated by assays taken in succession. The grain of the copper becomes finer by degrees, and its colour gradually brightens. When the grain is extremely fine, or *close*, when the trial-pieces, half cut through and then broken, present a silky fracture, and the copper is of a fine light red, the refiner considers the operation to be completed; but he verifies still further the purity of the copper, by trying its malleability. For this purpose, he takes out a sample in a small ladle, and pours it into a mould. When the copper is solidified, but still red-hot, he forges it. If it is soft under the hammer, and does not crack on the edges, the refiner is satisfied with its ductility, and pronounces it to be in its proper state. He then orders the workmen to mould it: they lift the copper out of the furnace in large iron ladles lined with clay, and pour it into moulds of a size suitable to the demands of commerce. The ordinary dimensions of the ingots or pigs are 12 inches broad, 18 long, and from 2 to 2½ thick.

The period of the refining process is 20 hours. In the first six, the metal heats and suffers a kind of roasting; at the end of this time it melts. It takes four hours to reach the point at which the refining, properly speaking, begins; and this last part of the process lasts about four hours. Finally, six hours are required to arrange the moulds, cast the ingots, and allow the furnace to cool.

The charge of copper in the refining process depends upon the dimensions of the furnace. In different works the charge varies from 3 to 5 tons.

When the copper offers difficulties in refining, a few pounds of lead are added to it. This metal, by the facility with which it scorifies, acts as a purifier, aiding the oxidation of the iron and other metals that may be present. The lead ought to be added immediately after removing the door to skim the surface. The copper should be constantly stirred to expose the greatest possible surface to the action of the air, and to produce the complete oxidation of the lead; since the smallest quantity of this metal in copper causes a difficulty in the lamination; *i.e.*, the scale of oxide does not come clean from the surface of the sheets.

The operation of refining copper is delicate, and requires, upon the part of the workmen, great skill and attention to give the metal its proper ductility. Its surface ought to be entirely covered with wood-charcoal; without this precaution, the refining of the metal would *go back*, as the workmen say, during the long interval which

Digitized by Google

elapses in moulding; whenever this accident happens, it must be stirred anew with the wooden pole.

Too long employment of the pole causes the copper to become more brittle than it was prior to the commencement of the refining; that is, when it was *dry*. Its colour is now of a very brilliant yellowish red, and its fracture fibrous. When this occurs, the refining, as the workmen say, has *gone too far*, and the refiner removes the charcoal from the top of the melted metal; he opens the side door, to expose the copper to the action of the air, and it then resumes its malleable condition.

The theory of refining may be thus explained:—We may conclude that the copper in the *dry state* before refining, is combined with a small portion of oxygen, or, in other words, that a small portion of oxide of copper is diffused through the mass, or combined with it; and that this proportion of oxygen is expelled by the deoxidising action of the wood and charcoal, whereby the metal becomes malleable. 2. That when the refining process is carried too far, the copper gets combined with a little carbon. Thus copper, like iron, is brittle when combined with oxygen or carbon; and becomes malleable only when freed entirely from these substances.

It is remarkable, that copper, in the *dry state*, has a strong action upon iron; and that the tools employed in stirring the liquid metal become glistening, like those used in a farrier's forge. The iron of the tools consumes more rapidly at this time than when the copper has acquired its malleable state. The metal requires, also, when *dry*, more time to become solid, or cool, than when it is refined; a circumstance depending, probably, upon the difference in fusibility of the copper in the two states, and which seems to indicate the presence of oxygen.

When the proper refining point has been passed, another very remarkable circumstance has been observed; namely, that the surface of the copper oxidises less easily, and that it is uncommonly brilliant; reflecting clearly the bricks of the furnace vault. This fact is favourable to the idea suggested above, that the metal is in that case combined with a small quantity of carbon; which absorbs the oxygen of the air, and thus protects the metal from its action.

Copper is brought into the market in different forms, according to the purposes which it is to serve. That which is to be employed in the manufacture of brass is granulated. In this condition it presents more surface to the action of zinc, and combines with it more readily. To produce this granulation, the metal is poured into a large ladle, pierced with holes and placed above a cistern filled with water, which must be hot or cold, according to the form of the grains required. When it is hot, round grains are obtained analogous to lead shot; and the copper in this state is called *bean shot*. When the melted copper falls into cold water perpetually renewed, the granulations are irregular, thin, and ramified; constituting *feathered shot*. The *bean shot* is the form employed in brass making.

Copper is also made into small ingots, about six ounces in weight. These are intended for exportation to the East Indies, and are known in commerce by the name of Japan copper. Whenever these little pieces are solidified, they are thrown, while hot, into cold water. This immersion slightly oxidises the surface of the copper, and gives it a fine red colour.

Lastly, copper is often reduced into sheets, for the sheathing of ships, and many other purposes.

The cylinders for rolling copper into sheets are usually 3 feet long, and 15 inches in diameter. They are uniform. The upper roller may be approached to the under one by a screw, so that the cylinders are brought closer in proportion as the sheet is made thinner.

The ingots of copper are laid upon the sole of a reverberatory furnace to be heated; they are placed alongside each other, and are formed into piles in a cross-like arrangement, so that the hot air may pass freely round them all. The door of the furnace is shut, and the workman looks in through a peep-hole from time to time, to see if they have taken the requisite temperature; namely, a dull red. The copper is now passed between the cylinders; but although this metal is very malleable, the ingots cannot be reduced to sheets without being several times heated; because the copper cools, and acquires, by compression, a texture which stops the further progress of lamination. See ANNEALING.

These successive heatings are given in the furnace above indicated; though, when the sheets are to have a very great size, furnaces somewhat different are had recourse to. They are from 12 to 15 feet long, and 5 feet wide. See BRASS.

The copper, by successive heating and lamination, gets covered with a coating of oxide, which is removed by steeping the sheets for a few days in a pit filled with urine; they are then put upon the sole of the heating furnace. Ammonia is formed, which acts on the copper oxide, and lays bare the metallic surface. The sheets are next rubbed with a piece of wood, then plunged, while still hot, into water, to make

Digitized by Google

the oxide scale off; and are lastly passed cold through the rolling press to smooth them. They are now cut square, and packed up for home sale or exportation.

The following estimate was given by MM. Dufrenoy and Elie de Beaumont of the expense of manufacturing a ton of copper at the time of their visit to South Wales in 1822.

	£	s.	d.
12½ tons of ore, yielding 8½ *per cent.* of copper	55	0	0
20 tons of coals - - - - - - -	8	0	0
Workmen's wages, rent, repairs, &c. - -	13	0	0
	£76	0	0

The exhalations from the copper smelting-works are exceedingly detrimental to both vegetable and animal life. They consist of sulphurous acid, sulphuric acid, arsenic and arsenious acids, various acid and fluoric vapours, with solid particles mechanically swept away into the air.

The following figures represent certain modifications of the copper calcining and smelting copper furnaces of Swansea.

Fig. 565 is the section of the roasting furnace lengthwise; *fig.* 566 the ground plan; in which *a*, is the fire door; *b*, the grate; *c*, the fire-bridge; *d*, the chimney; *e e*, apertures on each of the long sides of the furnace, through which the ore is spread, and turned over; *f f*, iron hoppers; *g g*, openings in the vaulted roof; *h* the hearth-sole; *i i*, holes in this; *k*, a vaulted space under the hearth. The hearth has a suitable oval shape, and is covered with a flat arch. Its length is 16 feet, breadth 13½, mean height 2 feet.

565

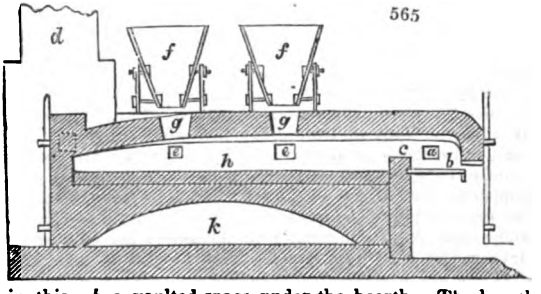

566

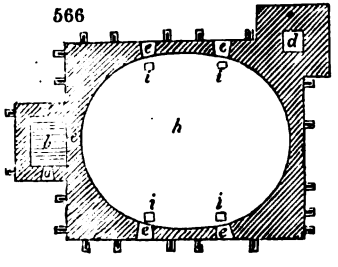

567

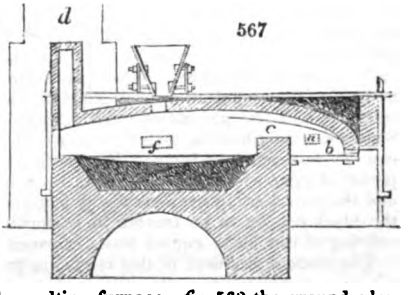

Fig. 567 is a longitudinal section of the melting furnace; *fig.* 568 the ground plan, in which *a*, is the fire-door; *b*, the grate; *c*, the fire-bridge; *d*, the chimney; *e*, the side openings; *f*, the working door; *g*, the raking-out hole; *h*, iron spouts, which conduct the melted metal into pits filled with water.

568

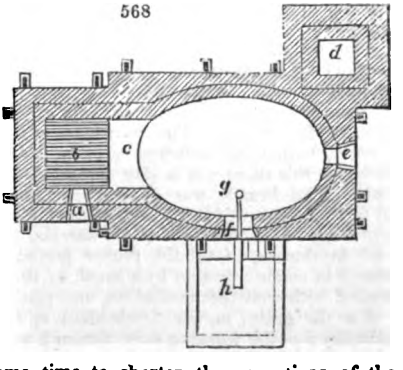

The melting furnace is altogether smaller; but its firing hearth is considerably larger than in the roasting furnace. The long axis of the oval hearth is 14 feet; its short axis 10 feet; its mean height 2 feet.

Napier's Process for smelting Copper Ores.—As the copper ores of this country often contain small portions of other metals, such as tin, antimony, arsenic, &c., which are found to deteriorate the copper, Mr. Napier's process has in view to remove these metals, and at the same time to shorten the operations of the smelting process.

Digitized by Google

The first two operations, that of calcining and fusing the ore, are the same as the ordinary process; but the product of this last fusion—viz., the *coarse metal*—is again fused with a little sulphate of soda and coal mixed. And whenever this becomes solid, after tapping the furnace, it is thrown into a pit of water, where it immediately falls into an impalpable powder; the water boils, and then contains caustic soda and sulphide of sodium, dissolving from the powder those metals that deteriorate the copper, the ley is let off, and the powder washed by allowing water to run through it. The powder is then put into a calcining furnace, and calcined until all sulphur is driven off, which is easily done from the finely divided state of the mass. This calcined powder is now removed to a fusing furnace, and mixed with ores containing no sulphur, such as carbonates and oxides, and a little ground coal, and the whole fused; the result of this fusion is metallic copper and sharp slag—that is, a scoria containing much protosilicate of iron, which is used as a flux in the first fusion of the calcined ore, so that any small trace of copper which the slag may contain is thus recovered.

The copper got from this fusion is refined in the ordinary way, and is very pure.

When the copper ores contain tin to the extent of from ¼ per cent. to 2 per cent., which many of them are found to do, Mr. Napier proposes to extract this tin, and make it valuable by a process which has also been the subject of a patent. The ore is first ground and calcined, till the amount of sulphur is a little under one-fourth of the copper present, the ore is then fused with a little coal. The result of this fusion, besides the scoria, is a regulus composed of sulphur, copper, and iron, and under this is a coarse alloy of copper, tin, and iron, called *white metal*. This alloy is ground fine, and calcined to oxidise the metals, which are then fused in an iron pot with caustic soda, which combines with the tin and leaves the copper. The oxide of copper is now fused with the regulus. The stannate of soda is dissolved in water, and the tin precipitated by slaked lime, which is dried and fused with carbonaceous matters and a little sand, and metallic tin obtained; the caustic soda solution is evaporated to dryness and used over again. This process is well adapted for very poor copper ores that are mixed with tin, or poor tin ores mixed with copper.

*Process employed at Chessy.**— The principal ore smelted at Chessy was the azure copper, which was discovered by accident in 1812. Red copper ore, also, came into operation there after 1825. The average metallic contents of the richest azure ore was from 33 to 36 per cent.; of the poorer, from 20 to 24. The red ore contained from 40 to 67 parts in 100. The ore was sorted to an average of 27 per cent. of metal, to which 20 per cent. of limestone was added; whence the cinder will amount to 50 per cent. of the ore. A few per cents. of red copper slag, with some quicklime and *gahrslag*, was added to each charge, which consisted of 200 pounds of the above mixture, and 150 pounds of coke. When the furnace (*fourneau à manche*, see the Scotch smelting hearth, under LEAD) is in good action, from 10 to 14 such charges can be worked in 12 hours. When the crucible is full of metal at the end of this period, during which the cinder has been frequently raked off, the blast is stopped, and the *matt* floating over the metal being sprinkled with water and taken off, leaves the black copper to be treated in a similar way, and converted into *rosettes*. The refining of this black copper was performed in a kind of reverberatory furnace.

The cinders produced in this reduction process were either vitreous and light blue, which were most abundant; cellular, black, imperfectly fused from excess of lime; or, lastly, red, dense, blistery, from defect of lime, from too much heat, and the passage of protoxide into the cinders. They consisted of silicate of alumina, of lime, protoxide of iron; the red contained some silicate of copper.

The copper-refining furnace at Chessy was of the kind called *Spleissofen* (split hearth) by the Germans. *Fig.* 569 is a section lengthwise on the dotted line A B of *fig.* 570, which is the ground plan.

The foundation-walls were made of gneiss; the arch, the fire-bridge, and the chimney, of fire-bricks. The hearth, *a*, was formed of a dense mixture of coal-dust, upon a bottom of well-beat clay, *b*, which reposed upon a bed of brick-work, *c*. Beneath this there was a slag bottom, *d*; *e* is the upper, and *f* the under discharge hole. The hearth was egg-shaped; the longer axis being 8 feet, the shorter 6½ feet; in the middle it was 10 inches deep, and furnished with the outlets, *g g*, which lead to each of the *Spleiss-hearths*, *h h*, *fig.* 570. These outlets were contracted with fire-bricks, *i i*, till the proper period of the discharge. The two hearths were placed in communication by a canal, *k*; they were 3½ feet in diameter, 16 inches deep; floored with well-beat coal-ashes, and received about 27 cwt. for a charge.

l is the grate; *m*, the fire-bridge; *n*, the boshes in which the *tuyères* lie; *o*, the chimney; *p*, the working door through which the slags may be drawn off. Above

* The Chessy Mines have been some years abandoned, but the refuse ores are being at present worked by a humid process.

Digitized by Google

this was a small chimney, to carry off the flame and smoke whenever the door was opened.

The smelting *post* or charge, to be purified at once, consisted of 60 cwt. of black copper, to which a little granular copper and copper of cementation were added; the consumption of pit-coal amounted to 36 cwt. As soon as the copper was melted, the bellows were set a-going, and the surface of the metal soon became covered with a moderately thick layer of cinder, which was drawn off. This was the first skimming or *décrassage*. By and by, a second layer of cinder formed, which was in like manner removed; and this skimming was repeated, to allow the blast to act upon fresh metallic surfaces.

569

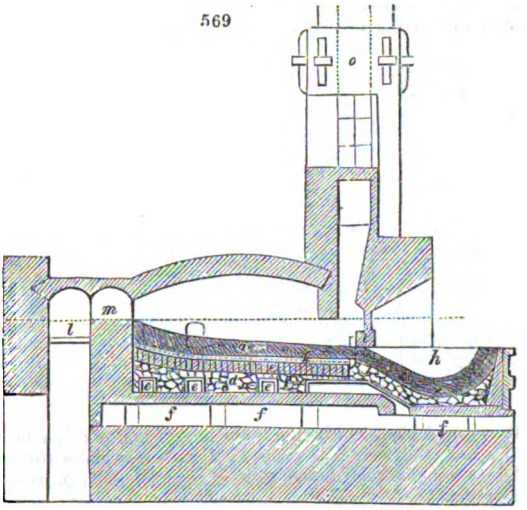

After 4 or 5 hours, no more slag appeared, and then the fire was increased. The melted mass now began to boil or work (*travailler*), and continued so to do for

570

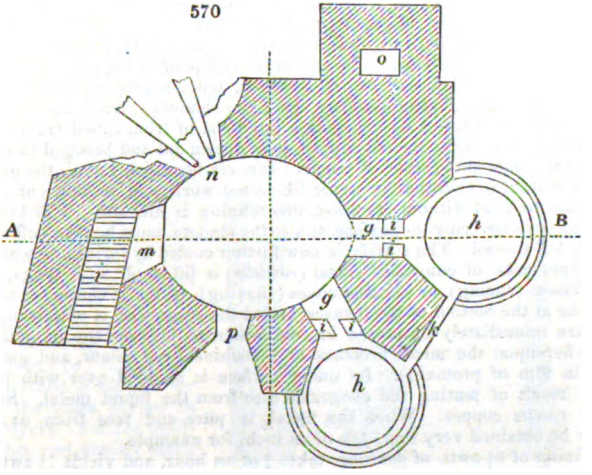

about ¾ of an hour, or an hour, after which the motion ceased, though the fire was kept up. The *gahrproof* was now taken; but the metal was seldom fine in less than ¾ of an hour after the boil was over. Whenever the metal was run off by the tap-hole into the two basins, *h h*, called SPLIT-HEARTHS, a reddish vapour or mist arose from its surface, composed of an infinite number of minute globules, which revolved with astonishing velocity upon their axes, constituting what the Germans called *spratzen* (crackling) of the copper. They were composed of a nucleus of metal, covered with a film of protoxide, and were used as sand for strewing upon manuscript. The copper was separated, as usual, by sprinkling water upon the surface of the melted metal, in the state of *rosettes*, which were immediately immersed in a stream of water. This refining process lasted about 16 or 17 hours; the skimmings weighed about 50 cwt.; the refuse was from 15 to 17 per cent.; the loss from 2 to 3 per cent. The *gahrslag* amounted to 11 cwt.

Digitized by Google

The refining of the eliquated copper (called *darrlinge*) from which the silver has been sweated out by means of lead, can be performed only in small hearths. The following is the representation of such a furnace, called in German *Kupfergahrheerd*. *Fig.* 571 is the section lengthwise; *fig.* 572 is the section across; and *fig.* 573 is

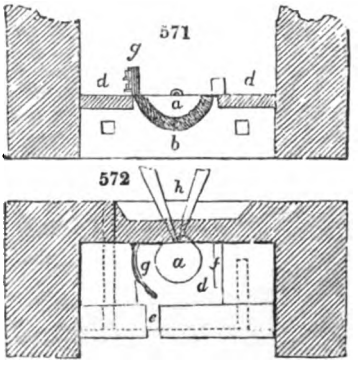

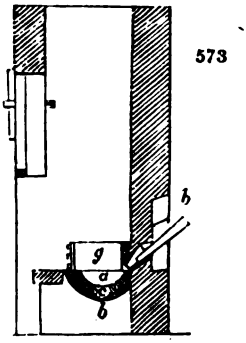

the ground plan, in which *a* is the hearth-hollow; *b*, a massive wall; *c*, the mass out of which the hearth is formed; *d*, cast-iron plates covering the hearth; *e*, opening for running off the liquid slag; *f*, a small wall; *g*, iron curb for keeping the coals together.

The hearth being heated with a bed of charcoal, ¾ cwt. of *darrlinge* are laid over it and covered with more fuel: whenever this charge is melted, another layer of the coal and *darrlinge* is introduced, and thus in succession till the hearth becomes full or contains from 2½ to 2¾ cwt. In Neustadt 7½ cwt. of *darrlinge* have been refined in one furnace, from which 5 cwt. of *gahrkupfer* has been obtained. The blast oxidises the foreign metals, namely, the lead, nickel, cobalt, and iron, with a little copper, forming the *gahrslag*; which is, at first, rich in lead oxide and poor in copper oxide; but, at the end, this is reversed. The slag, at first blackish, assumes progressively a copper-red tint. The slag flows off spontaneously along the channel *e*, from the surface of the hearth. The *gahre* is tested by means of a proof rod of iron, called *Gahreisen*, thrust through the *tuyère* into the melted copper, then drawn out and plunged in cold water. As soon as the *gahrspan* (scale of copper) appears brownish-red on the outside, and copper-red within, so thin that it seems like a net-work, and so deficient in tenacity that it cannot be bent without breaking, the refining is finished. The blast is then stopped; the coals covering the surface, as also the cinders, must be raked off the copper, after being left to cool. The surface is now further cooled by sprinkling water upon it, and the thick cake of congealed metal (*rondelle*) is lifted off with tongs, a process called *schleissen* (slicing), or *scheibenreissen* (shaving), which is continued till the last convex cake at the bottom of the furnace, styled the *kingspiece*, is withdrawn. These *rondelles* are immediately immersed in cold water, to prevent the oxidation of the copper; whereupon the metal becomes of a cochineal-red colour, and gets covered with a thin film of protoxide. Its under surface is studded over with points and hooks, the result of tearing the congealed disc from the liquid metal. Such cakes are called *rosette* copper. When the metal is pure and free from oxide, these cakes may be obtained very thin, $\frac{1}{24}$th of an inch, for example.

The refining of 2½ cwts. of *darrlinge* takes ¾ of an hour, and yields 1¼ cwts. of *gahr copper* in 36 rosettes, as also some *gahrslag*. Gahr copper generally contains from 1½ to 2¾ per cent. of lead, along with a little nickle, silver, iron, and aluminium.

Smelting of the Mansfeld Copper Schist, or bituminous Mergelschiefer.—The cupreous ore is first roasted in large heaps of 2000 cwts., interstratified with brush-wood, and with some slates rich in bituminous matter mixed with the others. These heaps are 3 ells high, and go on burning 15 weeks in fair and 20 in rainy weather. The bitumen is decomposed; the sulphur is dissipated chiefly in the form of sulphurous acid; the metal gets partially oxidised, particularly the iron, which is a very desirable circumstance for the production of a good smelting slag. The calcined ore is diminished $\frac{1}{10}$th in bulk and $\frac{1}{8}$th in weight; becoming of a friable texture and a dirty yellow colour. The smelting furnaces are cupolas (*Schachtofen*), 14 to 18 feet high; the fuel is partly wood-charcoal, partly coke from the Berlin gas-works and Silesia. The blast is given by a cylinder recently substituted for the old barbarous *Blasebälgen*, or wooden bellows of the household form.

Digitized by Google

The cupreous slate is sorted, according to its composition, into slate of lime, clay, iron, &c.; by a mixture of which the smelting is facilitated. For example, 1 post or charge may consist of 20 cwts. of the ferruginous slate, 14 of the calcareous, 6 of the argillaceous, with 3 of fluor-spar, 3 of rich copper slags, and other refuse matters. The nozzle at the *tuyère* is lengthened 6 or 8 inches, to place the melting heat near the centre of the furnace. In 15 hours 1 *fuder* of 48 cwt. of the above mixture may be smelted, whereby 4 to 5 cwts. of *matt* (crude copper, called *Kupferstein* in Germany) and a large body of slags are obtained. The *matt* contains from 30 to 40 per cent. of copper, and from 2 to 4 *loths* (1 to 2 oz.) of silver. The slags contain at times $\frac{1}{10}$th their weight of copper.

The *matt* is composed of the sulphides of copper, iron, silver, zinc, along with some arsenical cobalt and nickel. The slaty slag is raked off the surface of the melted *matt* from time to time. The former is either, after being roasted 6 successive times, smelted into black copper, or it is subjected to the following concentration process. It is broken to pieces, roasted by brushwood and coals 3 several times in brick-walled kilns, containing 60 cwts., and turned over after each calcination; a process of 4 weeks' duration. The thrice roasted mass, called *spurrost*, being melted in the cupola, *fig.* 574, with ore-cinder, yields the *spurstein*, or concentrated *matt*. From 30 to 40 cwts. of spurrost are smelted in 24 hours; and from 48 to 60 per cent. of *spurstein* are obtained, the slag from the slate smelting being employed as a flux. The spurstein contains from 50 to 60 per cent. of copper, combined with the sulphides of copper, of iron, and silver.

The spurstein is now mixed with *dünnstein* (a sulphide of copper and iron produced in the original smelting) roasted 6 successive times, in quantities of 60 cwt., with brushwood and charcoal; a process which requires from 7 to 8 weeks. The product of this six-fold calcination is the *Gahrröst* of the Germans; it has a colour like red copper ore, varying from blue grey to cochineal-red, with a granular fracture; and may be immediately reduced into metallic copper, which process is called *kupfermachen*. But before smelting the mass, it is lixiviated with water, to extract from it the soluble sulphate, which is concentrated in leaden pans, and crystallised.

The lixiviated *gahrröst* mixed with from $\frac{1}{4}$ to $\frac{1}{3}$ of the lixiviated *dünnsteinrost*, and $\frac{1}{8}$ to $\frac{1}{10}$ of the copper slate slag, are smelted with charcoal or coke fuel in the course of 24 hours, in a mass of 60 or 80 cwts. The product is black copper, to the amount of about $\frac{1}{4}$ the weight, and $\frac{1}{8}$ of *dünnstein*, or *thin matt*. This black copper contains in the cwt. from 12 to 20 loths (6 to 10 oz.) of silver. The dünnstein consists of from 60 to 70 per cent. of copper combined with sulphur, sulphide of iron, and arsenic; and when thrice roasted, yields a portion of metal. The black copper lies undermost in the crucible of the furnace, above it is the *dünnstein*, covered with the stone slag, or copper cinder, resulting from the slate-smelting. The slags being raked off, and the crucible sufficiently full, the eye or nozzle hole is shut, the *dünnstein* removed by cooling the surface and breaking the crust, which is about $\frac{1}{4}$ to $\frac{1}{3}$ inch thick. The same method is adopted for taking out the black copper in successive layers. For the desilvering of this, and similar black coppers, see SILVER.

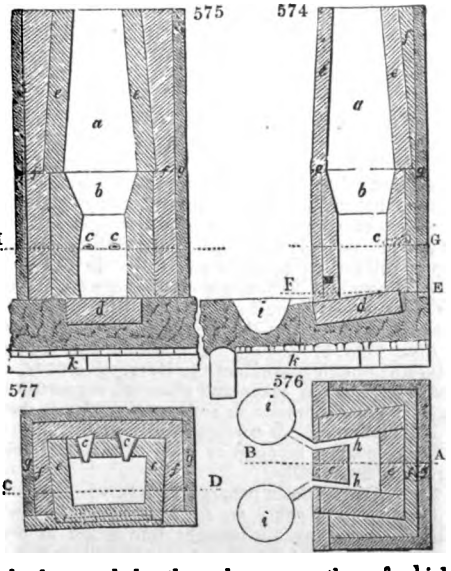

Fig. 574 is a vertical section through the *tuyère* in the dotted line A B of *fig.* 576. *Fig.* 575 is a vertical section through the dotted line C D of *fig.* 577. *a* is the shaft of the furnace; *b*, the rest, *c c*, the *tuyères*; *d*, the sole or hearth-stone, which has a slope of 3 inches towards the front wall; *e e*, &c., casing walls of fire bricks; *f f*, &c., filling-up walls built of rubbish stones; *g g*, a mass through which the heat is slowly conducted; *h h*, the two holes through one or other of which alternately the product of the smelting process is run off into the fore-hearth. Beneath

Digitized by Google

the hearth sole there is a solid body of loam; and the fore-hearth is formed with a mixture of coal-dust and clay; *k* is the discharge outlet for moisture. *Fig.* 576 is a horizontal section of the furnace through the hole or eye, on the dotted line E F of *fig.* 574; *fig.* 577, a horizontal section of the shaft of the furnace through the *form* along the dotted line G H of *figs.* 574 and 575. The height of the shaft, from the line E F to the top, is 14 feet; from E to G, 25 inches; from *c* to the line below *b*, 2 feet; from that line to the line opposite *g g*, 2 feet, The width at the line *g g* is 3 feet 3 inches, and at *c*, 26 inches. The basins, *i i*, *fig.* 576, are 3 feet in diameter and 20 inches deep.

Figs. 577*a*, 577*b*, 577*c* represent the reverberatory furnace generally employed in the Harz, in the district of Mansfeldt, Saxony, Hungary, &c., for the treatment of black copper, and for refining rose copper upon the great scale. An analogous furnace is used at Andreasberg for the liquefaction or purification of the matts, and for workable lead when it is much loaded with arsenic.

577*a*

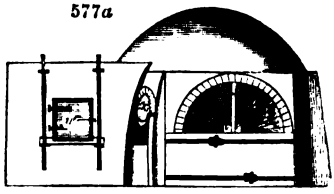

Fig. 577*a* presents the elevation of the furnace parallel to the line I K, of the plan *fig.* 577*b*, which plan is taken at the level of the tuyère *n* of *fig.* 577*c*; *fig.* 577*c* is a vertical section in the line L M, *fig.* 577*b*. *k* represents

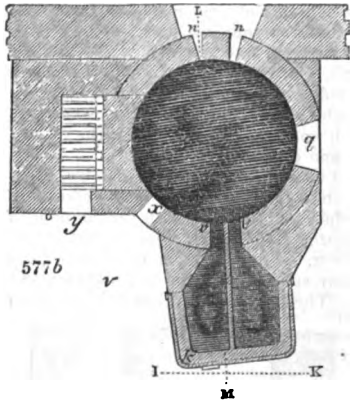

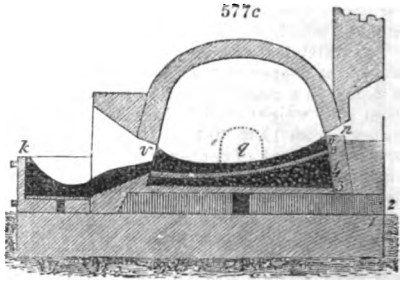

one of two basins of reception, brasqued with clay and charcoal; *n*, *n*, two tuyères through which enters the blast of two pairs of bellows; *q*, door by which the matter to be melted is laid upon the sole of the furnace; *v*, *v*, two points where the sole is perforated, when necessary to run off the melted matter into either of the basins *k*; *x*, door through which the slags of cinders floating upon the surface of the melted metal are raked out; *y*, door of the fire-place. The fuel is laid upon a grate above an ash-pit, and below the arch of a reverberatory, which is contiguous to the dome or cap of the furnace properly so called. In the section, *fig.* 577*c*, the following parts may be noted: 1, 2, 3, mason-work of the foundation; 4, vapour channels or conduits, for the escape of the humidity; 5, bed of clay; 6, brasque composed of clay and charcoal, which forms the concavity of the hearth.

Figs. 577*d*, 577*e*, 577*f* show the furnace employed for liquation in one of the principal smelting works of the Harz. *Fig.* 577*f*, exhibits the working area charged with the liquation cakes and charcoal, supported by sheets of wrought iron; being an image of the process in action. *Fig.* 577*e* is the plan, in the line F G, of *fig.* 577*d*.

A liquation cake is composed of—

Black copper holding at least 5 or 6 *loths* (2½ or 3 oz.) of silver per cwt., and weighing 90 to 96lbs.

Lead obtained from litharge, 2 cwts. Litharge, ½ cwt.

From 30 to 32 cakes are successively worked in one operation, which lasts about 5 hours; the furnace is brought into action as usual, with the aid of slags; then a little litharge is added; when the lead begins to flow, the copper is introduced, and when the copper flows, lead is added, so that the mixture of the metals may be effected in the best possible way.

Digitized by Google

From 8 to 16 of these cakes (*pains*) are usually placed in the liquation furnace, *figs.* 577*d*, 577*e*, 577*f*. The operation lasts 3 or 4 hours, in which time about 1½ quintals of charcoal are consumed. The cakes are covered with burning charcoal supported, as before stated, by the iron plates. The workable lead obtained flows off towards the basin in front of the furnace; whence it is laded out into moulds set alongside. See *fig.* 577*e*. If the lead thus obtained be not sufficiently rich in silver to be worth cupellation, it is employed to form new liquation cakes. When it contains from 5 to 6 loths of silver per cwt., it is submitted to cupellation in the said smelting works. See SILVER.

Utilisation of the Copper Smoke.—The application of the sulphur disengaged in the calcination or roasting of copper ores to the production of liquid sulphuric acid, has long been an important object of copper smelters. In the case of a small proportion of copper ores, containing a comparatively large proportion of sulphur, and in the state of hard lumps, free from earthy matter, this is effected in the ordinary "pyrites burner" of the sulphuric acid works. But copper ores, for the most part, are small, poor in sulphur, with much earthy matter; and are therefore calcined in reverberatory furnaces with fire grates. The gases from these calciners do not consist of more than 0·5 vol. of sulphurous acid in 100 vols., and are moreover largely mixed with the products of combustion from the fire-place: they were therefore unfit for the vitriol chamber, and were allowed to escape.

An important invention, by which this loss is avoided, is the calcining furnace of M. Gerstenhöffer; in which the ore, in a finely divided state, is allowed to fall on a number of fire-brick bars or bearers, placed in rows, at different elevations. The ore, which is supplied in a continuous stream at the top, meets in its descent with a current of air in the reverse direction. The furnace being moderately heated on starting, the ore ignites, and afterwards maintains its own combustion, without the aid of fuel, for any length of time; while the ascending current of air becomes charged with sulphurous acid of sufficient strength and purity to be conveyed to the vitriol chambers.

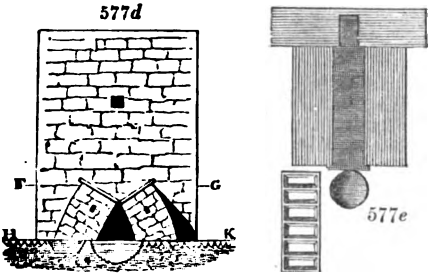

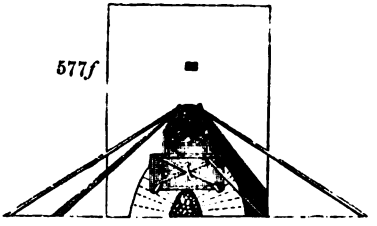

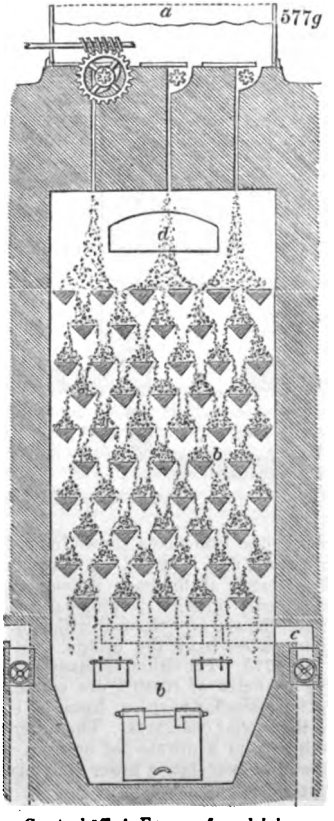

Gerstenhöffer's Furnace for calcining Copper Ores.

Digitized by Google

The annexed figures represent perpendicular transverse sections of M. Gerstenhöffer's furnace: *fig.* 577*g* is a cross-section parallel with the front; *fig.* 577*h* represents a section from front to back. The length of the earthen bars is about two feet six inches: twenty rows occupy about twelve feet in height; *a* is an iron box or hopper for containing a supply of ground ore, having at bottom two or more cast iron grooved rollers, which are worked without interruption, at a speed adapted to supply ore equal to a discharge of about 10 cwts. of sulphur per twenty-four hours. As the ore sometimes has a tendency to form a cake on the bars, it is necessary to scrape these occasionally, by means of an iron rod, with curved end, which is introduced through

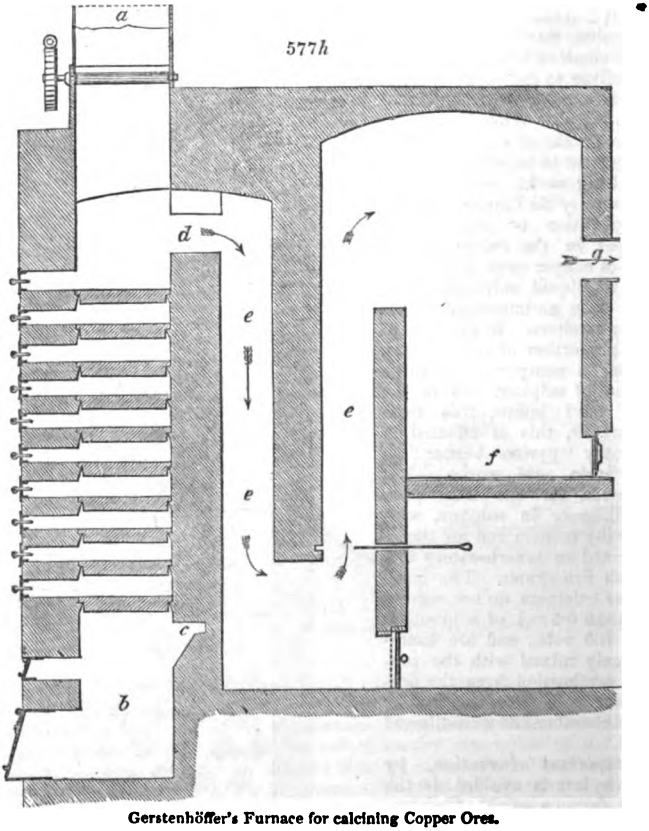

Gerstenhöffer's Furnace for calcining Copper Ores.

plug-holes in cast iron boxes, shown in *fig.* 577*h*. The calcined ore collects in the cavity *b* at the bottom, and is raked out when convenient. The necessary amount of air is admitted partly at the back through the flue *c*, regulated by means of a screw-valve, and partly through the plug-holes in front. After passing upwards through the calciner, the air, now charged with sulphurous acid to the extent of 6 or 8 per cent. in volume, passes over the bridge, and through the flue *e* in the direction of the arrows, *fig.* 577*h*. Provision is made at the bottom of these flues for collecting and removing particles of roasted ore carried over by the current; *f* is a brick-built chamber for a similar purpose, from the back of which the gas passes through the flue *g* to the vitriol chambers. The latter are supplied with nitric acid in the usual way; either from a nitrate-pot or oven worked independently, or with liquid nitric acid allowed to percolate a tower and mix with the gas from the calciners before entering the leaden chambers.

The Gerstenhöffer calciner is applicable to all varieties of sulphuretted copper ores, although varying in proportion of sulphur from 16 to 40 per cent.; it is also adapted to the "rough metal" or regulus obtained as the result of the first reducing operation.

Digitized by Google

The calcination is conducted with ease, so that no more sulphur remains in the ore than is necessary for the smelting processes.

As the superiority of this calciner over every other, having a similar object, has been abundantly proved, both on the Continent, in the Government copper smelting establishments of Freiberg and Mansfeldt, and in this country, in the works of Messrs. Vivian and Sons, near Swansea (who are the proprietors of the English patent), it is expected that their general introduction into copper works will be the means of greatly reducing the smoke arising therefrom and turning it to profitable account.

Mr. Peter Spence, of Manchester, has also a calciner which has been four years in operation, and has calcined 20,000 tons of copper ore. Mr. Spence, in his patent of the 3rd July 1861, thus describes his arrangements:—

"The essential feature of invention consists in submitting such ores to the action of a roasting heat as they are passed from one end of a furnace to the other, during which transference a current of air is caused to travel over them in an opposite direction; to accomplish this, a furnace of considerable length, having several doors

577*i*

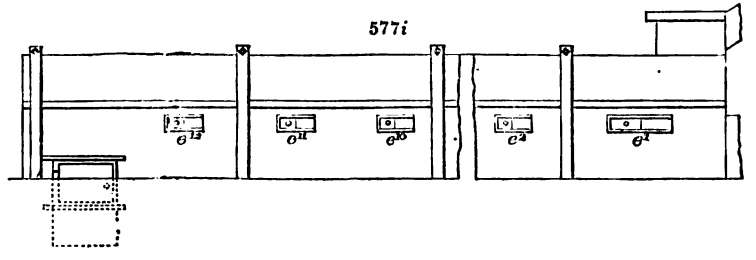

577*k*

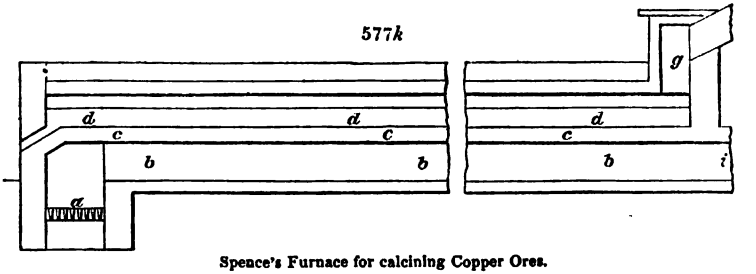

Spence's Furnace for calcining Copper Ores.

for the purpose of introducing apparatus by which the transference may be effected, is used. It will be obvious that by this arrangement the ores may be submitted to heat in a thin stratum, that the amount of roasting may be modified by a quicker or slower transference, and that the heat communicated may be greater towards the termination of the operation than at the commencement thereof."

This invention will be fully understood by the accompanying drawings of apparatus.

Fig. 577*i* is a side view of the furnace, and *fig.* 577*k* a longitudinal section, in both of which the two ends only are shown, the whole being of considerable length. One now in operation is fifty feet long, with twelve doors for the transference of the ores; but these dimensions may be varied, and are only mentioned for the purpose of explaining that the furnace should be of considerable length. *Fig.* 577*l* represents a cross section, and in describing the apparatus in the first instance we suppose that the manufacture of sulphuric acid is the object in view.

577*l*

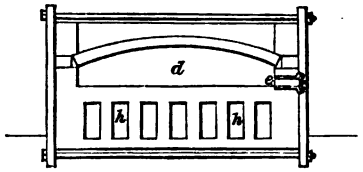

Spence's Furnace for calcining Copper Ores.

At *a* are the fire bars of the furnace, and at *b* the fire chamber, formed by channels, as seen in *fig.* 577*l*, extending under a partition *c* of fire brick, which partition forms the bottom of another and distinct chamber *d*, furnished at one or both sides with a number of doors e^1, e^2, &c. At *f* is an aperture formed through the brickwork, and constituting a communication from the external atmosphere to the chamber *d*. The

Digitized by Google

ores from which sulphuric acid is to be obtained are passed through the door e^1 into the chamber *d* in sufficient quantity to lie about two or three inches in thickness upon the bed *c*, and to extend, say, halfway towards the door e^2. This batch having been submitted to heat, passing from the fire chamber *b* for the required time, is pushed forward by any convenient instrument, so as to be brought opposite the door e^2, and another batch is introduced through the door e^1; then the first charge is removed from e^2 to e^3, and the second from e^1 to e^2, and so on until the first deposited batch shall have arrived at the other end of the furnace at e^{12}, and it is then pushed through the aperture *f* into any receptacle placed to receive it. During this transference of the material, it has gradually become heated, and a current of air entering at *f* has been passing over it, and the operation has caused the sulphur to be driven off from the ore and conveyed through the channel *g* to the ordinary sulphuric acid apparatus. The end of the fire chamber *d* leads to a flue at *i*. The degree of roasting to be effected, and so as to secure the best results, can be ascertained only by experience; but working with a furnace fifty feet long and with twelve doors, the first charge is allowed to remain for one hour, then transferred to the second position, and a fresh charge put into the first, and so on, waiting an hour between each change.

An advantage arising from this invention is its capability of being applied to the manufacture of sulphuric acid from any description of ores. It is well known to those engaged in the extraction of copper from ores that the sulphur thereof is frequently wasted from the impracticability of roasting certain mixed ores so as to render them into a fit condition for reduction, and also for the manufacture of sulphuric acid; but by this improved method, ores of any description, large or small, may be roasted so as to produce sulphuric acid with economical results. In calcining the mixed copper ores preparatory to smelting, as practised at the Swansea and other copper works, and with the view of economizing the manufacture of sulphuric acid, the process of calcination by this method is effected with equal advantage as by the modes now practised, as the heat is made to act on a large body of the ore without an exhaustive, but with an accumulative effect, so that the heat which has calcined or driven off nearly the last portion of sulphur from the ore which lies at the exit of the furnace then passes on, heating every successive charge, and gaining strength from the combustion of the sulphur until it comes into contact with the cold charge, which it rapidly heats to ignition, partly from the under heat of the bed derived from the fire, which, after leaving the furnace, is passed to a chimney, and partly from all the hot gases passing over it on their way out of the furnace to the vitriol chamber, into which they are conveyed after being mixed with nitrous gases, as is well known.

As another advantage arising from the use of this invention, it is found in the practical carrying out thereof, that the production of a given amount of sulphuric acid is effected by the expenditure of far less nitre than is commonly used, a certain amount of sulphuric acid being formed in the chamber of the furnace and passing forward in a state of vapour. Thus far we have spoken of this invention as applicable to the manufacture of sulphuric acid, but it is also applicable to roasting ores of copper preparatory to reduction. In this application the operation is precisely that above described, and will not, therefore, need a repetition of description, it being of course understood that if the ores have been previously used for the manufacture of sulphuric acid, and contain, therefore, but a small amount of sulphur, the vapours from the chamber *d* may pass into the atmosphere instead of into the vitriol chamber, if desired.

On the 14th June 1864, Mr. Peter Spence and Mr. J. B. Spence effected another patent for "calcining and smelting copper ores." This will be fully understood by the following description:—

"Our invention consists in applying the heat used in smelting copper ores to the purpose of calcining such materials, and in transferring the calcined ores direct to the smelting furnace. To accomplish these objects, we place the two furnaces in connection with each other, and cause a suitable flue to convey the heat used in smelting to the material to be calcined; and when this operation is complete, and the smelted ore is removed, we rake the calcined ore direct on to the bed of the smelting furnace. The calcining furnace we at present prefer to use is of that construction for which Letters Patent were granted to Peter Spence, bearing date July 3rd, 1861, No. 1695."

In addition to these processes, it may be stated that a company has been established at Oldbury, in Staffordshire, for working the process known as "Henderson's salt process." We have been favoured with the following description:—

"The works are erected for the purpose of extracting the copper, and utilizing the residue from the Spanish pyrites, imported mostly by the alkali makers, and the sulphur extracted by them for the purpose of making SO_3. We then calcine the ore with salt in such a way as to decompose every trace of copper, and peroxidise the whole of the iron that is not already oxidised during the burning out of the sulphur.

Digitized by Google

We then put the calcined ore into vats or tanks; and as the chloride of copper is readily soluble, that metal is washed out perfectly clean with hot water, and the residue Fe_2O_3 is sold at the iron works in the immediate neighbourhood. This is used in the puddling furnaces, and answers well for *two purposes*: first, to keep the pig iron from cutting the bottom of the furnaces, and, secondly, to improve the quality of the wrought iron produced. We sell of this residue about 600 tons per month. The copper is precipitated from the solution by scrap iron, the precipitate run down and refined; and the whole of the copper is sold as B. S. ingot. We produce 15 to 18 tons of copper per month."

Spanish Process of refining Copper.—The refining of copper is well executed at Seville, in Spain; therefore some account of the mode of operating is required.

The first object is to evaporate in a reverberatory furnace all the volatile substances, such as sulphur, arsenic, antimony, &c., which may be associated with the copper; and the second, to oxidise and convert into scoriæ the fixed substances, such as iron, lead, &c., with the least possible expense and waste. The minute quantities of gold and silver which resist oxidation cannot be in any way injurious to the copper. The hearth is usually made of refractory sand and clay with ground charcoal, each mixed in equal volumes, and worked up into a doughy consistence with water. This composition is beat firmly into the furnace bottom. But a quartzose hearth, such as a bed of fire-sandstone, is found to answer better, and to be far more durable.

Before kindling the furnace, its inner surface is smeared with a mixture of fire-clay and water.

The cast pigs, or blocks of crude copper, are piled upon the hearth, each successive layer crossing at right angles that which is beneath it, in order that the flame may have access to play upon the surface of the hearth, and to heat it to a proper pitch for making the metal flow.

The weight of the charge should be proportional to the capacity of the furnace, and such that the level of the metallic bath may be about an inch above the nozzle of the bellows; for, were it higher, it would obstruct its operation, and, if too low, the stream of air would strike but imperfectly the surface of the metal, and fail to effect, or would at least retard, the refining process, by leaving the oxidation and volatilisation of the foreign metals incomplete.

As the scoriæ form upon the surface, they are drawn off with an iron rabble fixed to the end of a wooden rod.

Soon after the copper is melted, charcoal is kindled in three iron basins lined with loam, placed alongside the furnace, to prepare them for receiving their charge of copper, which is to be converted in them, into *rosettes*.

The bellows are not long in action before the bath assumes a boiling appearance; some drops rise up to the roof, others escape by the door, and fall in a shower of minute spherical globules. This phenomenon proves that the process is going on well; and, when it ceases, the operation is nearly completed. A small proof of copper, of the form of a watch-case, and therefore called *montre*, is taken out from time to time upon the round end of a polished iron rod, previously heated. This rod is dipped 2 or 3 inches into the bath, then withdrawn and immersed in cold water. The copper cap is detached from the iron rod by a few blows of a hammer, and judgment is formed from its thickness, colour, and polish, as to the degree of purity which the copper has acquired. These *watches* need not be drawn till the small rain, above spoken of, has ceased to fall. At the end of about 11 hours of firing, the numerous small holes observable in the first *watch* samples begin to disappear; the outer surface passes from a bright red to a darker hue, the inner one becomes of a more uniform colour, and always less and less marked with yellowish spots. It has acquired the greatest pitch of purity that the process can bestow when the *watches* become of a dark crimson colour.

Care must be taken to stop this refining process at the proper time; for, by unduly prolonging it, a small quantity of cupreous oxide would be formed, which, finding nothing to reduce it, would render the whole body of the copper hard, brittle, and incapable of lamination.

The *tuyère* being closed, the basins must be emptied of their burning charcoal, and the melted copper allowed to flow into them through the tap-hole, which is then stopped with loam. Whenever the surface is covered with a solid crust, it is sprinkled with water; and as soon as the crust is about 1½ inch thick it is raised upon hooks above the basin, to drain off any drops, and then carried from the furnace. If these cakes, or rosettes, be suddenly cooled by plunging them immediately into water, they assume a fine red colour, from the formation of a film of oxide.

Each refining operation produces, in about 12 hours, $1\frac{1}{10}$ths ton of copper, with the consumption of about $\frac{1}{3}$ths of a ton of dry wood.

Digitized by Google

Care should be taken that the copper cake, or rosette, be perfectly solidified before plunging it into water, otherwise a very dangerous explosion might ensue. On the other hand, the cake should not be allowed to cool too long, lest it get oxidised upon the surface, and lose those fine red, purple, and yellow shades, due to a film of the suboxide, which many dealers admire.

When antimony or oxide of copper are combined with copper, they occasion the appearance of micaceous scales in the fractured faces. Such metal is hard, brittle, yellowish within, and can be neither laminated nor wire-drawn. These defects are not owing to arsenic, as was formerly imagined; but, most probably, to antimony in the lead, which is sometimes used in refining copper. They are more easily prevented than remedied.

According to M. Frèrejean, proprietor of the great copper works of Vienne, in Dauphiny, too low a temperature, or too much charcoal, gives to the metal a cubical structure, or that of divergent rays; in either of which states it wants tenacity. Too high a temperature, or too rapid a supply of oxygen, gives it a brick-red colour, a radiated crystallisation without lustre, or a very fine grain of indeterminate form; the last structure being unsuitable for copper that is to be worked under the hammer or in the rolling-mill. The form which indicates most tenacity is radiated with minute fibres glistening in mass. Melted copper will sometimes pass successively through these three states in the space of ten minutes.

Fig. 578 represents a *roasting mound* of copper pyrites in the Lower Harz, near Goslar, where a portion of the sulphur is collected. It is a vertical section of a truncated quadrangular pyramid. A layer of wooden billets is arranged at the base of the pyramid in the line *a a*.

c, a wooden chimney, which stands in the centre of the mound with a small pile of charcoal at its bottom, c; *d d* are large lumps of ore surrounded by smaller pieces; *f f*, are rubbish and earth to form a covering. A current of air is admitted under the billets by an opening in the middle of each of the four sides of the base, *a a*, so that two principal currents of air cross under the vertical axis, c, of the truncated pyramid, as indicated in the figure.

578

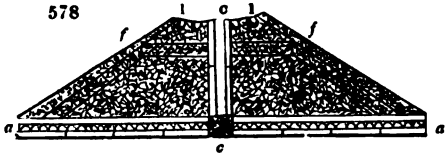

The fire is applied through the chimney, c; the charcoal at its bottom, *c*; the pile, *d d*, is kindled, and the sulphurous ores are raised to such a high temperature as to expel the sulphur in the state of vapour.

In the Lower Harz a roasting mound continues burning during four months. Some days after it is kindled the sulphur begins to exhale, and is condensed by the air at the upper surface of the pyramid. When this seems impregnated with it, small basins are excavated, in which some liquid sulphur collects; it is removed from time to time with iron ladles, and thrown into water, where it solidifies. It is then refined and cast into roll brimstone.

A similar roasting mound contains, in the Lower Harz, from 100 to 110 tons of ore, and 730 cubic feet of wood. It yields in four months about one ton and a half of sulphur from copper pyrites. Lead ore is treated in the same way, but it furnishes less sulphur.

There are usually from 4 to 5 roasting heaps in action at once for each smelting works of the Lower Harz. After the first roasting two heaps are united to form a third, which is calcined anew, under a shed; the ores are then stirred up and roasted for the third time, whence a crude mixture is procured for the smelting-house.

The most favourable seasons for roasting in the open air are spring and autumn; the best weather is a light wind accompanied with gentle rain. When the wind or rain obstruct the operation, this inconvenience is remedied by planks distributed round the upper surface of the truncated pyramid over the sulphur basins.

Wet Methods of Extracting Copper.

The Process of extracting Copper from Ores, at the Mines in the Riotinto District, Province of Huelva, Spain, by what is termed "Artificial Cementation."

This method, which was first applied here by Don Felipe Prieto, a mine proprietor of Seville, in the year 1845, is the only one employed in the present day in the copper mines of that district.

The operation begins with the calcination of the ores, previously reduced to small pieces; piles or heaps of these ores (sometimes in the form of cones) are made on beds of stubble fire-wood of about a yard thick; each pile is made up with from 400 to 500 tons of mineral, and allowed to burn for six months; the smoke destroying all vegetation within its reach.

Digitized by Google

The ores, after being thus burnt or calcined, are thrown into wooden troughs let into the ground, about 6 yards long, 4 wide, and 1½ deep, called "dissolvers." In each of these troughs, or cisterns, are placed about twelve tons of calcined ore, and the trough is then filled with water; which water is, after remaining in contact with the ores for forty-eight hours, drained off into a similar trough placed at a lower level, and called a "depositor." The ores remaining in the dissolver are covered by a second quantity of water, left on, this time, for three days; and the process repeated four times successively, the water being always drained off into the same depositor.

From the depositors the water flows on to another set of troughs called "pilones," into which is placed a quantity of pig iron, broken into pieces of about the size of bricks, and piled loosely together that the vitriol in the water may better act on its whole surface. Each of these troughs (*pilones*) will hold from 12 to 18 tons of pig iron (wrought iron answers the purpose as well, but it is much more expensive); and, as experience has demonstrated that a slow continuous movement in the water hastens the process, a man is employed for the purpose of agitating it, until all the copper suspended in the vitriol water is deposited, which, in summer, is effected in about 2 days, and in from 3 to 5 days in winter. After the water has been renewed four or five times, and the agitation process repeated, the scales of copper deposited on the iron, as well as that in the form of coarse grains of sand found in the bottom of the trough, are collected together, washed, and melted, when it is found to produce from 65 to 70 per cent. of pure copper.

From the remains of the first washings of the above copper scales, &c., another quality is obtained, worth about 50 per cent. for copper, which is mixed with the after washings, yielding about 10 per cent. of copper, and passed on to the smelting furnace.

The method is very defective. Minerals containing 5 per cent. of copper, treated by this system of reduction, will scarcely give a produce of 2 per cent. of that metal. It is, however, the only method that has hitherto been profitably employed in the Riotinto district.

It appears from the official returns that the average produce of the copper ores of the Riotinto district by this process is under 1½ per cent. The following quantities, put into English measure, are taken from the returns of the Government mines at Riotinto, published in the "Revista Minera:"—

Year.	Quantity of Ores raised.	Quantity of Copper produced.	Produce per Cent.
	Tons.	Tons.	
1854 - - -	38,915	720·9	1·85
1855 - - -	37,123	834·5	2·24
1856 - - -	37,866	740·5	1·98
Average - -	37,968	7653	*2 0 of 4 years.

The produce of some of the mines of the district is under 1 per cent. A quantity of the richest of the copper ores produced by the mines in the Riotinto district, in the year 1857, were shipped from Huelva, a port near Seville, for Newcastle, in England; and the result has been that the value of the sulphur saved in the process of reduction has contributed largely towards paying the smelting expenses.—S. H.] See PYRITES COPPER, and PYRITES IRON.

The Process of extracting Copper from the Water that drains out of the Mine, a Riotinto, called the "System of Natural Cementation" (Precipitation).

The mine worked by the Spanish government at Riotinto is formed in a mass of iron pyrites containing copper; and its immense labyrinth of excavations are known to extend over a length of 500 yards and a width of 100 yards (and probably to a much greater extent); the earliest of which workings must date back to very remote times; for in the different excavations are still to be found the impressions of hands, evidently guided by the science of the ancients, middle ages, and of more modern times.

The sixth, or lowest level in the mine, where all the operations of the present day are carried on, is 80 yards deep (from the top of the hill in which the lode is found),

* But this average of 2 per cent. for the 4 years contains and includes the copper produced from the water which drains out of the mine, and which copper, for the year 1856, amounted to 206½ tons; deducting this quantity from the return, 740½ tons, for that year, and the produce would be only 1·43 per cent. for the ores.

Digitized by Google

and it is from this level that the mine is (naturally) drained by an adit. From the roof, at the extreme end of a gallery at this level, flows, from an unknown source, a stream of water rich in copper, which, together with the drainage from other points of the mine, is directed through a channel to the adit "San Roque," that empties its waters at the foot of the hill, where the copper is extracted.

An able engineer has thus explained the phenomena of "natural cementation:"—"The natural ventilation through the open excavations of this mine, combined with the humidity of the ground, produces a natural decomposition of the materials composing the lode or vein, and thereby forming sulphates of iron and copper, which the water is continually dissolving and carrying off, thus forming the substance of this 'natural cementation.'"

This said adit "San Roque," which empties its waters on the south side of the hill, has placed in it two wooden launders, or channels, about 12 inches wide and 15 inches deep, and (in the year 1853) 400 yards long; in the bottom of these launders is placed pieces of pig iron, and to this iron adhere the particles of copper which the slowly flowing water contained in solution. In ten days the iron becomes coated with copper, so pure as to be worth 80 per cent. for fine copper, and so strongly formed in scales as to resist to a certain extent the action of a file, and give a strong metallic sound on being struck with a hammer. At the expiration of ten days, or earlier, the scales of copper so formed on the iron are removed, that the surface of the iron may be again exposed to the action of the mineral water; and the process repeated to the entire extinction of the iron. The copper thus obtained passes at once to the refining furnace.

Since 1853 it has been discovered that the water escaping from the launders in the adit, 400 yards long, still contained copper, and they have been lengthened to nearly 1000 yards with good effect.

[*Note by the Translator.*—The "Revista Minera" (a mining review), published by the engineers of the Government School of Mines, in Madrid, gives returns of the government mines at Riotinto for the year 1856; wherein it is stated that the quantity of copper taken out of this mineral water, by "natural cementation," amounted, for the year, to 206½ tons.—S. H.]

The following processes for the humid treatment of copper ores are described by Messrs. Phillips and Darlington*:—

Linz Copper Process.—"At Linz on the Rhine, and some other localities in Germany, the poorer sulphides of copper, containing from 2 to 5 per cent. of that metal, are treated by the following process:—

"The ores coming directly from the mine, and without any preliminary dressing, are first roasted in a double-soled furnace, and then taken to a series of tanks sunk in the ground, and lined with basalt. These tanks are also provided with a double bottom, likewise formed of basalt, so arranged as to make a sort of permeable diaphragm, and on this is placed the roasted ore, taking care that the coarser fragments are charged first, whilst the finer particles are laid upon them.

"The cavity thus formed between the bottom of the tank and the diaphragm, or false bottom, is connected, by means of proper flues, with a series of oblong retorts, through each of which a current of air is made to pass from a ventilator, or a pair of large bellows, set in motion by steam or water power.

"In order to use this apparatus, a quantity of ore is roasted in the reverberatory furnace, and subsequently placed in the tanks, taking care that the first layer shall be in a coarser state of division than those which succeed it.

"The retorts—which are formed of fire tiles, and about 6 inches in height by 1 foot in width and 6 feet in length—are now brought to a red heat, charged with blende, and the blast applied.

"The sulphurous acid thus formed is forced by the draught through the flues, where it becomes mixed with nitrous fumes, obtained from a mixture of nitrate of soda and sulphuric acid, and ultimately passes into the chambers beneath the diaphragms on which are laid the roasted ores, which must be previously damped by the addition of a little water, of which a small quantity is also placed in the bottoms of the tanks. The sulphuric acid thus generated attacks the oxide of copper formed during the preliminary roasting, giving rise to the production of sulphate of copper, which percolates through the basaltic diaphragm into the reservoir beneath.

"The liquors which thus accumulate are from time to time distributed over the surface of the ore, and the operation repeated until the greater portion of the copper has been extracted, when, by shifting the damper, the gases are conducted into another tank similarly arranged. The liquors from the first basin are now pumped

* Records of Mining and Metallurgy, p. 182.

Digitized by Google

into the second, and the operation continued until the ores which it contains have ceased to be acted on by the acid. When sufficiently saturated, the liquors are drawn off into convenient troughs, and the copper precipitated by means of scrap iron. The sulphate of iron thus formed is subsequently crystallised out, and packed into casks for sale.

"On removing the attacked ores from the tank, the finer or upper portions are thrown away as entirely exhausted, nearly the whole of the copper having been removed from them, whilst the coarser fragments are crushed and re-roasted, and finally form the upper stratum in a subsequent operation.

"It has been found that, by operating in this way, ores yielding only 1 per cent. of copper may be treated with considerable advantage since the sulphate of iron produced, and the increased value of the roasted blende, are alone sufficient to cover the expenses of the operation.

"By this process, 3 cwts. of coal are said to be required to roast one ton of ore, whilst the same quantity of blende is roasted by an expenditure of 4 cwts. of fuel."

Treatment of Copper Ores by Hydrochloric Acid.—"At a short distance from the village of Twista, in the Waldeck, several considerable bands of sandstone, more or less impregnated with green carbonate of copper, have been long known to exist. Although varying considerably in its produce, this ore, on the average, yields 2 per cent. of copper, and was formerly raised and smelted in large quantities; but this method of treatment not having apparently produced satisfactory results, the operations were ultimately abandoned.

"The insoluble nature of the granular quartzitic gangue with which the copper is associated, suggested, some two years since, to Mr. Rhodius, of the Linz Metallurgic Works, the possibility of treating these ores by means of hydrochloric acid, and a large establishment for this purpose has ultimately been the result.

"These works consist of a crushing mill, for the reduction of the cupreous sandstone to a small size, 16 dissolving tubs, and a considerable number of tanks and reservoirs for the reception of the copper liquors and the precipitation of the metal by means of scrap iron. Each of the 16 dissolving tubs is 13 feet in diameter, and 4 feet in depth, and furnished with a large wooden revolving agitator, set in motion by a run of overhead shafting in connection with a powerful water wheel. This arrangement admits of the daily treatment of 20 tons of ore, and the consequent production of from 7 to 8 cwts. of copper. Each operation is completed in 24 hours, the liquor being removed from the tanks to the precipitating trough by the aid of wooden pumps. The ore is *stoped* and brought into the works at 4*s.* per ton.

"The acid employed at Twista is obtained from the alkali works in the neighbourhood of Frankfort, contains 16 per cent. of real acid, and costs, delivered at the works, 2*s.* per 100 lbs. Each ton of sandstone treated requires 400 lbs. of acid, which is diluted with water down to 10 per cent. before being added to the ore. Every ton of copper precipitated requires 1¼ ton of scrap iron, at 4*l.* 5*s.* per ton.

"These works yielded during the last year 120 tons of metallic copper, and afforded a net profit of nearly 50 per cent. The residues from the washing vats, run off after the operation, contain but $\frac{1}{10}$th per cent. of copper.

"It is probable that this extremely simple process of treating the poorer carbonates and oxides of copper may be practicable in many other localities; but in order to be enabled to do so with advantage, it is necessary that the ore should be obtainable in large quantities at a cheap rate, and that it should contain but little lime or any other substance than the ores of copper soluble in dilute hydrochloric acid. It is also essential that the mine should be in the vicinity of alkali works, in order that a supply of acid may be obtained at a cheap rate, and also that scrap iron be procurable in sufficient quantities and at a moderate price."

Bankart's Process, which consists essentially in converting the sulphurets of copper by roasting with access of air, was practised at Neath for some time. The ore was roasted for twenty-four hours, being frequently stirred, atmospheric air entering the furnace freely. The calcined ore was drawn out into trains and conveyed to the washing floors. Boiling water is made to filter through the mass which dissolves and carries away in solution all the copper present, and leaves the ore chiefly in the state of oxide of copper and peroxide of iron associated with the silicious matrix. This residue is now again roasted with a due admixture of the same mineral in the raw state; and the sulphur of the latter, which would otherwise have gone off in a state of sulphurous acid gas, receives, through the agency of the peroxide of iron in the ore, an additional atom of oxygen, by which it is converted into sulphuric acid: this again acts on a considerable portion of free oxide of copper, and, uniting with it, forms sulphate of copper, to be again extracted by solution in boiling water as before described.

These successive operations are continued until almost the whole of the copper has

Digitized by Google

been extracted, and a residue has been obtained consisting almost extensively of silica and peroxide of iron.

To obtain the metallic copper from these solutions pieces of wrought or cast iron are immersed in the liquid, when, by the action of a well-known chemical affinity, the acid and oxygen desert the copper and transfer themselves to the iron with the formation of sulphate of iron, depositing at the same time the copper in a pure crystalline and metallic state, requiring merely a simple fusion to convert it into cake copper of almost chemical purity.

Escalle's process, which was practised near Marseilles for some years, was of a similar character. The ore was calcined in a double-bedded reverberatory furnace. It was then treated with hydrochloric acid. The chlorides formed were dissolved out, and collected in wooden tanks. The copper was precipitated by a sulphide of calcium obtained from the soda works, and a pure sulphide of copper was obtained. These cakes, called *pains*, were heated in a sort of blast furnace, in alternation with layers of charcoal, and converted into a copper sponge. This was remelted and a very pure copper obtained.

Hähner's process, consisting in converting the sulphides of copper into oxides and then treating them with chlorides; the chlorides are dissolved in water, and the copper precipitated.

Henderson's process consists in heating the copper ores in admixture with chloride of sodium, so as to volatilise the copper in combination with chlorine, and condense it in a suitable apparatus. "It remains to be seen," says Dr. Percy, "Metallurgy," "if Mr. Henderson will succeed in effectually collecting the gaseous compound of copper: if he should, his condensing apparatus would be a valuable acquisition to the patentee."

Precipitating Processes carried on in this Country.

Alderley Edge, in Cheshire.—The works at these mines are the most important. The sandstone of this curious elevation above the plain of Cheshire is impregnated with copper existing in the states of blue and green carbonates. The beds containing this copper lie at a short distance below the surface, and therefore it is easily worked. This cupriferous sandstone is ground; it is then digested in wooden tanks with muriatic acid, which dissolves out all the copper. The muriate of copper in solution is precipitated by scrap iron. The quantities of ore raised and copper obtained are given as follows in the "Mineral Statistics" for the last few years—the weight of the ore has only been given in the two years 1859 and 1864:

	Ore.	Precipitate.	Fine Copper.
	Tons.	Tons.	Tons.
1859	10,271	234	172
1860	- -	227	155
1861	- -	335	215
1862	- -	303	204
1863	- -	300	200
1864	14,696	315	203

It will be easy to calculate in each case the quantity of ore raised, and the percentage of copper contained in it.

Mona and Pary's Mines, Anglesea.—The waters draining from the enormous heaps accumulated from the old and remarkable workings of those mines are collected in large ponds and precipitated by iron. In 1864, Mona Mine produced 459 tons of precipitate, and Pary's Mine 296 tons.

Wicklow Mines.—Similar precipitating processes are carried on in these mines. The process is thus described by Mr. W. W. Smyth in his "Mines of Wicklow and Wexford."

From a letter of the Rev. William Henry, D.D., inserted in the Philosophical Transactions for 1752, we learn that the existence of copper in solution in the water flowing from Ballymurtagh had only lately been discovered by accident, but had given rise to extensive apparatus where 500 tons of iron were at the same time employed to effect the precipitation of the costlier metal. The mode of operating was very rude; pits were dug, 10 feet long, 4 feet wide, and 8 feet deep, floored with flags and lined with stone, and the iron bars were laid on rough wooden beams fixed across from wall to wall. Dr. Henry's statement of the everlasting efficiency of the water, shows that, by him at least, the rationale of its action was little under-

Digitized by Google

stood. "Chains of these pits are continued along the stream, as far as the directors please, for the water never abates of its quality, if it were conveyed from pit to pit through a thousand."

By this mode a ton of the precipitate obtained from the pits yielded 16 cwts. of the finest copper. Dr. Rutty states, that in seven years previous to 1765 the Cronebane water had yielded 17,260*l.*, from precipitate copper; the precipitate affording above half of pure metal.

Towards the close of last century, copper was obtained by the same means at Cronebane and Tigroney. According to the "Journal des Mines," vol. III., it was usual to add to the strength of the solution, by placing in the water a quantity of poor pyritous ore which had undergone a process of roasting. The form of the pits is not described, but the ratio of pure copper to the precipitated powder was only 0·328.

The quantity of precipitate or cementation copper exported to England was, in 1788, 11½ tons.; in 1789, 37 tons.; in 1790, 59¾ tons.

During Mr. Weaver's management, the water was run into tanks in which the muddy particles were allowed to subside, and then passed into pits filled with plate and scrap iron; the quantity precipitated during that series of years was 442½ tons., which sold on an average at 27*l.* 8*s.* 9*d.* per ton, being in aggregate value 12,126*l.*; whilst the consumption of iron was rather less than one ton to the ton of the precipitate.

At the present date the water is economised at all the Ovoca Mines, but by a somewhat different method it is led through a series of narrow troughs or launders, inclined at angles of 10° or 12°, and interrupted at intervals by a deep chest or "hutch." At Tigroney the precipitate is swept down with brooms every night and morning into the hutches, the contents of which are aftewards mixed, and realise 50 to 60 per cent. of copper. The expenses of obtaining it are about 3*l.* per ton for attendance, sifting, &c. At Connarie people are kept sweeping down the launders throughout the day, by which means the precipitate, although more rapidly collected, is more impure, yielding but 43 to 54 per cent. of copper.

M. Bischoff junr. has patented a process for obtaining copper by precipitation which certainly effects the separation of the copper with great readiness, and, as he assures us, with great economy. His process differs from any other in the circumstance of his obtaining the iron in a peculiar condition. He takes the ordinary iron pyrites (*Mundic*), and reduces this to a state of coarse powder. This is then mixed with coke and exposed to heat in close furnaces. The sulphur is volatilised, and the incandescent coke absorbing all the oxygen, the iron is prevented from oxidising, and it remains in a metallic state combined with some carbon. When this process is completed, the powder is drawn off into close vessels and kept until required for use, carefully guarded from the air. If this preparation is thrown into a solution of sulphate of copper, there is a violent action, and the copper in a metallic state is at once thrown down. In practice, M. Bischoff prefers spreading out this preparation in thin layers, and passing the copper water through it. The process has been in use at some of the works on the banks of the Dee, and, as we understand, considerable success has attended its use. The only difficulty appears to be in preserving the finely divided metallic iron from oxidation, which is essentially necessary to the success of the process.

Mr. S. Higgs junr. has greatly accelerated the process of precipitation by forcing steam through the solution of copper in which pieces of iron have been placed. This process has been successfully applied by him at Huel Margery copper mine, St. Ives, Cornwall.

Assay of Copper Ores.

The ores of this metal are exceeding numerous, but may be comprehended under three classes:

The *first class* includes those ores which contain, with the exception of iron, no metal except copper, and are free from arsenic and sulphur.

The *second class* comprehends those ores which contain no other metal than copper and iron, but in which a greater or less proportion of sulphur is present.

The *third class* consists of such ores as contain other metals in addition to iron and copper, together with sulphur or arsenic, or both.

The apparatus best adapted for the assay of copper ores is a wind furnace, about 16 inches in depth, and of which the width may be 8 inches, and the length 10 inches. This must be supplied with good hard coke, broken into fragments of about the size of a small orange.

Ores of the first class.—When these are moderately rich, their assay offers no difficulty, and usually affords satisfactory results. The sample, after being ground in a

Digitized by Google

mortar and well mixed to insure uniformity of composition, is intimately blended with three times its weight of black flux. The whole is now introduced into a crucible, of which it should not occupy above one-third the capacity, in order to avoid loss from the subsequent swelling of the pasty mass when heated; and on the top is uniformly spread a thin layer of carbonate of soda.

The crucible and its contents are now placed in the furnace, previously heated to redness, and the pot is allowed to remain uncovered until the ore and flux have become reduced to a state of tranquil fusion. This will take place in the course of about a quarter of an hour, and the crucible is then closed by a cover, and the damper opened so as to subject the assay, during another quarter of an hour, to the highest temperature of the furnace. The crucible is then removed from the fire, and the metallic button obtained, either by rapid pouring into a mould or by allowing the pot to cool, and then breaking it.

The metallic "*prill*" thus obtained may subsequently, if necessary, be refined according to the Cornish process, to be hereafter described.

Ores of the second class.—The most common ores of this class are copper pyrites and other sulphides.

Fusion for Regulus.—This process consists in fusing the ores with fluxes capable of removing a portion of its sulphur, and eliminating siliceous and earthy impurities. These conditions are well fulfilled by a mixture of nitre and borax, since, with a proper proportion of these reagents, all the ores belonging to this class are fused with the formation of a vitreous slag and a well-formed button of regulus. When the contents of the crucible have been completely fused, they must be rapidly poured into an iron or bell-metal mould of a conical form.

The separation of the regulus from the scoriæ must be carefully effected by the use of a small chisel-edged hammer, a sheet of paper being placed under the button to prevent loss.

Roasting.—To obtain the pure metal from the sulphides of copper, it is necessary that the sulphur, &c., should be removed by roasting before reducing the copper present to the metallic state.

When rich ores, producing from 20 to 35 per cent. of metallic copper, are operated on, the roasting and subsequent reduction may be made directly on the mineral. When, however, poor ores, such as those of Cornwall, containing from 6 to 10 per cent., are to be treated, it is far better to commence by obtaining a button of regulus as above.

The calcination of the rich ore or regulus is conducted in the same crucible in which the subsequent fusion with reducing agents is to take place; and at the commencement of the operation care must be taken not to cause the agglutination of the ore, or pulverised button, by the application of too high a temperature. In order to succeed in effecting this object, the ore or regulus must be first finely powdered in an iron mortar, and then put into an earthen crucible, which is to be placed in a sloping position on the ignited coke with which the furnace is filled, the draught at the same time being partially cut off by the damper.

A moderate heat is thus obtained, and the mixture is continually stirred by means of a slight iron rod, so that each particle may in its turn be exposed to the oxidising influences of the atmosphere. When a large portion of the sulphur, &c., has been driven off, the contents of the crucible becomes less fusible, and may without inconvenience be heated to redness. At this stage, it is often found advantageous to heat the partially roasted mass to full redness, since by this means the sulphides and sulphates become reduced to the state of oxides by their mutual reaction on each other.

As soon as the smell of sulphur can no longer be observed, and the roasting process is consequently in an advanced state, the heat should for some minutes be increased to whiteness, in order to decompose the sulphates, after which the crucible may be withdrawn and allowed to cool.

Reduction.—To obtain the copper from the roasted ore or matt, it may be mixed with one-fourth its weight of lime, from 10 to 20 per cent. (according to the produce of the ore) of finely powdered charcoal, from 1 to 1½ times its weight of soda ash or pearl ash, and a little borax. When this has been well mixed, it is placed in the crucible in which the roasting of the ore, or regulus, has been conducted, and covered with a thin stratum of fused borax.

In lieu of powdered charcoal, from 15 to 20 per cent. of crude tartar is sometimes employed.

The crucible is now placed in the fire and strongly heated for about a quarter of an hour, at the expiration of which time, the bubbling of the assay will have ceased, and it must then be closed by an earthen cover, and for a short time heated nearly to whiteness.

The prill may be obtained either by rapidly pouring into a suitable mould or by

Digitized by Google

allowing the pot to cool, and then breaking it. If required, the resulting button may be refined by the Cornish method.

Ores of the third class.—Minerals belonging to this class must be treated like those of the second, excepting that the preliminary roasting should, from their greater fusibility, be conducted at a lower temperature. The button obtained from the calcined ore, or regulus, will in this case consist of an alloy of copper and other metals instead of, as in the former instances, being nearly pure copper.

If an ore contains lead, the roasting must at first be conducted with the greatest precaution, since it is extremely difficult so to moderate the heat as to cause at the same time the elimination of the arsenic and sulphur, and avoid the agglutination of the mass.

The assay of ores belonging to this class should in all cases be commenced by a fusion for matt.

The refining of the button obtained from such assays may be effected either by the Cornish method, or by the humid process, to be hereafter described.

Cornish Method of conducting an Assay.—A portion of the pounded and sifted ore is first burnt on a shovel, and examined as to its supposed richness and the amount of sulphur, arsenic, and other impurities it may contain. A little practice in this operation will enable the operator to judge with considerable accuracy of the quantity of nitre necessary in order to obtain a good regulus.

Two hundred grains of the mixed ore are now weighed out and carefully mixed with a flux consisting of nitre, borax, lime, and fluor-spar, and the fusion for matt or regulus is begun. The quantity of nitre used will of course vary with the amount of sulphur and arsenic present; but the other ingredients are commonly employed in the following proportions:—Borax, 5 dwts.; lime, 1½ ladleful; fluor spar, 1 ladleful.* After being placed in the crucible, the whole is generally covered by a thin stratum of common salt. After remaining in the fire for about a quarter of an hour, the fusion will be found complete, and the contents of the pot may be poured into a suitable iron mould. The button of regulus is now examined, in order to determine whether a suitable proportion of nitre has been used. If the right quantity has been employed, the button, when broken, should present a granular fracture, and yield from "8 to 10 for 20" for copper, *i.e.* from 40 to 50 per cent. However rank a sample may be, it should never be mixed with above 9 or 9½ dwts. of nitre; and if the amount of sulphur be small, 3 dwts. are often sufficient. The grey sulphides, the red and black oxides, and carbonates, have sulphur added to them for the purpose of obtaining a regulus.

Highly sulphurised samples, requiring above 9½ dwts. of nitre, are sometimes treated in a different way.

In this case the ores are first carefully roasted, and afterwards fused with about 5 dwts. of nitre, 9 dwts. of tartar, and 3 dwts. of borax.

The roasting of the regulus thus obtained is performed in a smaller crucible than that used in the fusion for matt. During the first quarter of an hour, a very low temperature is sufficient. The heat is then increased to full redness, and the assay allowed to remain on the fire for a further period of about 20 minutes. During the first 15 minutes it should be kept constantly stirred with a slender iron rod; but afterwards, an occasional stirring will be found sufficient. When nearly the whole of the sulphur and arsenic has been expelled, the temperature must be raised nearly to whiteness during a few minutes, and the assay then withdrawn and allowed to cool. The fusion for copper is effected in the same crucible in which the roasting has been carried on.

The quantity of flux to be used for this purpose varies in accordance with the weight of the button of regulus obtained. A mixture of 2 dwts. of nitre, 7½ dwts. of tartar, and 1½ dwt. of borax, is sufficient for the reduction of a calcined regulus that, previous to roasting, weighed from 45 to 50 grains. In the case of a button weighing from 90 to 100 grains, 3½ dwts. of nitre, 9 dwts. of tartar, and 2 dwts. of borax, should be employed. These quantities are, however, seldom weighed, since a little practice renders it easy to guess, with a sufficient degree of accuracy, the necessary amounts.

The prill of copper thus obtained is seldom fine, and consequently requires purification.

A crucible is heated to redness in the furnace, the metallic button is taken from the mould and thrown into it, and some refining flux and salt are placed in a scoop for immediate use.† In a few minutes, the fusion of the prill is effected. The crucible is now taken from the fire by a pair of tongs, the contents of the scoop introduced, and a gentle agitation given to it; an appearance similar to the brightening of silver

* The ladle used for this purpose is three-quarters of an inch in diameter and half an inch in depth.

† The refining flux consists of two parts of nitre and one of white tartar fused together, and subsequently pounded.

Digitized by Google

on the cupel now takes place, and the crucible is returned to the fire for about four minutes.

The crucible is now removed, and its contents rapidly poured into a mould. The button thus obtained will consist of pure copper, and present a slight depression on its upper surface.

The slags from the reducing and refining operations are subsequently fused with a couple of spoonfuls of crude tartar, and the prill thus obtained weighed with the larger button.

Humid Method of assaying Copper Ores.—In some localities, and particularly in the United States of America, the assay of copper ores is performed by the humid process. The whole of the ores belonging to the three different classes may be estimated in this way.

A weighed quantity of the pulverised ore is introduced into a long-necked flask of hard German glass, and slightly moistened with water. Nitric acid is now added, and the flask exposed to the heat of a sand bath. A little hydrochloric acid is subsequently introduced, and the attack continued until the residue, if any remains, appears to be free from all metallic stains.

The contents of the flask must be transferred to a porcelain evaporating dish, and evaporated to dryness, taking care, by means of frequent stirring, to prevent the mass from spirting. The whole must now be removed from the sand bath and allowed to cool, a little hydrochloric acid subsequently added, and, afterwards, some distilled water. The contents of the basin must then be made to boil, and, whilst still hot, filtered into a beaker. A piece of bright wrought iron, about two inches in length, three-quarters of an inch in width, and a quarter of an inch in thickness, is now introduced, and the liquor gently heated on the sand bath until the whole of the copper has been thrown down. The liquor is now removed by means of a glass siphon, and the metallic copper freed from all adhering chlorides, by means of repeated washings with hot water, and then dried in a water bath, and weighed.

In case the mineral operated on should contain tin or antimony, very minute traces only of these metals will be found with the precipitated copper. When lead is present, it is best to add a few drops of sulphuric acid during the process of the attack; by this means the lead will be precipitated as sulphate of lead, and be removed by filtration. The results obtained by this process are somewhat higher than afforded by the fire assay.—J. A. P.

Copper forms the basis of a greater number of important ALLOYS than any other metal. With zinc it forms brass in all its varieties. See BRASS.

Bronze and bell-metal are alloys of copper and tin. This compound is prepared in crucibles when only small quantities are required; but in reverberatory hearths, when statues, bells, or cannons are to be cast. The metals must be protected as much as possible during their combination from contact of air by a layer of pounded charcoal, otherwise two evils would result, waste of the copper by combustion, and a rapid oxidation of the tin, so as to change the proportions and alter the properties of the alloy. The fused materials ought to be well mixed by stirring, to give uniformity to the compound. See BRONZE.

By an analysis of M. Berthier, the bells of the *pendules*, or ornamental clocks, made in Paris, are found to be composed of copper 72·00, tin 26·56, iron 1·44, in 100 parts.

An alloy of 100 of copper and 14 of tin is said by M. Dussaussy to furnish tools, which, hardened and sharpened in the manner of the ancients, afford an edge nearly equal to that of steel (?).

Cymbals, gongs, and the *tamtam* of the Chinese are made of an alloy of 100 of copper with about 25 of tin. To give this compound the sonorous property in the highest degree, it must be subjected to sudden refrigeration. M. D'Arcet, to whom this discovery is due, recommends to ignite the piece after it is cast, and to plunge it immediately into cold water. The sudden cooling gives the particles of the alloy such a disposition that, with a regulated pressure by skilful hammering, they may be made to slide over each other, and remain permanently in their new position. When by this means the instrument has received its intended form, it is to be heated and allowed to cool slowly in the air. The particles now take a different arrangement from what they would have done by sudden refrigeration; for instead of being ductile they possess such an elasticity, that, on being displaced by a slight compression, they return to their primary position after a series of extremely rapid vibrations; whence a very powerful sound is emitted. Bronze, bell-metal, and probably all other alloys of tin with copper, present the same peculiarities.

The bronze-founder should study to obtain a rapid fusion, in order to avoid the causes of waste indicated above. Reverberatory furnaces have been long adopted for this operation; and among these, the elliptical are the best. The furnaces with

Digitized by Google

spheroidal domes are used by the bell-founders, because, their alloy being more fusible, a more moderate heat is required; however, as the rapidity of the process is always a matter of consequence, they also would find advantage in employing the elliptical hearths. Coal is now universally preferred for fuel.

The process of coating copper with tin exemplifies the strong affinity between the two metals. The copper surface to be tinned is first cleared with a smooth sandstone; it is then heated and rubbed over with a little salammoniac, till it be perfectly clean and bright; the tin, along with some pounded resin, is now placed on the copper, which is made so hot as to melt the tin, and allow of its being spread over the surface with a dossil or pad of tow. The layer thus fixed on the copper is exceedingly thin; Bayen found that a copper pan, 9 inches in diameter and 3¼ inches deep, being weighed immediately before and after tinning, became only 21 grains heavier. Now as the area tinned, including the bottom, amounted to 155 square inches, 1 grain of tin had been spread over nearly 7¼ square inches; or only 20 grains over every square foot.

Copper and Arsenic form a white-coloured alloy, sometimes used for the scales of thermometers and barometers; for dials, candlesticks, &c. To form this compound, successive layers of copper clippings and white arsenic are put into an earthen crucible; which is then covered with sea salt, closed with a lid, and gradually heated to redness. If 2 parts of arsenic have been used with 5 of copper, the resulting compound commonly contains one-tenth of its weight of metallic arsenic. It is white, slightly ductile, denser, and more fusible than copper, and without action on oxygen at ordinary temperatures; but, at higher heats, it is decomposed with the exhalation of arsenious acid. The white copper of the Chinese consists of 40·4 copper; 31·6 nickel; 25·4 zinc; and 2·6 iron. This alloy is nearly silver white; it is very sonorous, well polished, malleable at common temperatures, and even at a cherry red, but very brittle at a red-white heat. When heated with contact of air, it oxidises, burning with a white flame. Its specific gravity is 8·432. When worked with great care, it may be reduced to thin leaves and wires as small as a needle. See GERMAN SILVER, *infrà*.

Tutenag, formerly confounded with white copper, is a different composition from the above. Keir says it is composed of copper, zinc, and iron; and Dick describes it as a short metal, of a greyish colour, and scarcely sonorous. The Chinese export it, in large quantities, to India.

M. Pelouze states that an alloy of equal parts of copper and nickel is greatly preferable to an alloy which contains also zinc. Even 2 of copper and 1 of nickel form a valuable alloy.

The chemical preparations of copper which constitute distinct manufactures are ROMAN VITRIOL or copperas, SCHEELE'S GREEN and SCHWEINFURTH GREEN, VERDITER, VERDIGRIS. See PYRITES (IRON).

During a term of about 30 years, 220 mines have sold their ores at the public sales. The following Table, from "Records of Mining and Metallurgy," by Messrs. Phillips and Darlington, represents the progress of copper mining from 1726 to 1855: —

Copper Ore raised and sold in Cornwall and Devon in decennial Periods for 126 *Years—from* 1725 *to* 1855.

Date.	Tonnage of Ore.	Tonnage of Copper.	Amount.	Average annual Amount.	Average annual Tonnage of Ore.	Average Produce.	Price per Ton of Copper Ore.	Inc. of Copper Ore.
	Tons.	Tons.	£	£	Tons.		£ s. d.	
1726 to 1735	64,800	—	473,500	47,350	6,486	—	7 15 10	1·00
1736 to 1745	75,520	—	560,106	56,010	7,552	—	7 8 6	1·16
1746 to 1755	98,790	—	731,467	73,145	9,879	—	7 8 0	1·52
1756 to 1765	169,699	—	1,243,045	124,304	161,970	—	7 6 6	2·61
1766 to 1775	264,273	—	1,778,337	177,833	26,427	—	6 14 6	4·10
1776 to 1785	304,133	36,496	1,827,006	182,700	30,413	12	6 0 2	4·69
1786 to 1795	229,169	—	1,359,724					
1796 to 1805	564,037	53,588	5,003,191	500,319	56,403	9½	8 17 4	8·70
1806 to 1815	726,308	62,550	6,056,260	605,626	72,630	8 6/10	8 6 9	11·20
1816 to 1825	926,271	75,986	6,044,627	604,462	92,627	8 3/10	6 10 6	14·29
1826 to 1835	1,352,313	108,801	8,088,220	808,822	135,231	8	5 19 0	20·86
1836 to 1845	1,486,840	111,770	8,547,059	854,705	148,840	7½	5 15 0	22·94
1846 to 1855	1,628,152	123,259	9,251,916	925,191	162,215	7½	5 14 0	25·03
126 years	7,884,305	- -	50,964,388	- -	- -	- -	6 9 3	
70 years	- -	572,450	- -	- -	- -	8%		

Digitized by Google

Imports and Exports of Copper Ore and Regulus, wrought and unwrought Copper and declared Value of Brass and Copper Manufactures, for 15 Years, ending 1855:—

Years.	Imports.		Exports.	Declared Value of Brass and Copper Manufactures exported.
	Copper Ore and Regulus.	Copper, unwrought and wrought.	Copper, unwrought and wrought.	
	Tons.	Tons.	Tons.	£
1841 - -	48,597	559	570	1,523,744
1842 - -	49,856	309	341	1,801,742
1843 - -	55,720	213	176	1,644,248
1844 - -	58,406	1459	1296	1,736,545
1845 - -	56,697	130	318	1,694,441
1846 - -	51,624	609	490	1,558,187
1847 - -	41,491	849	628	1,541,868
1848 - -	50,053	1686	311	1,257,944
1849 - -	47,433	2590	636	1,875,865
1850 - -	45,862	4881	834	1,978,196
1851 - -	42,126	5043	1285	1,639,156
1852 - -	43,044	5181	1046	1,704,083
1853 - -	50,393	5200	1639	1,854,331
1854 - -	57,292	3218	1753	1,768,950
1855 - -	66,599	8044	950	2,113,177
Total -	765,193	39,871	12,273	£25,692,477

Imports.—Copper, unwrought and wrought - - - 39,871
Exports.—Copper, unwrought and wrought - - - 12,273

From 1855 to 1865 the following have been the quantities of copper produced in Cornwall and Devonshire. This completes the foregoing table to the present time.

Date.	Copper Ore.	Value of Ore.	Fine Copper produced.	Mean Average price of Copper.	Average Standard.	Average per cent. produce.
	Tons.	£	Tons.	£ s.	£ s.	
1856	206,177	1,241,835	13,533	123 0	103 13	$6\frac{1}{2}\frac{1}{16}$
1857	191,798	1,201,270	12,179	124 0	140 7	$6\frac{3}{8}$
1858	182,391	1,057,534	11,831	108 2	131 14	$6\frac{1}{2}$
1859	181,848	1,096,207	11,827	110 7	133 6	$6\frac{1}{2}$
1860	180,883	1,065,376	11,797	107 13	133 18	$6\frac{1}{2}$
1861	180,778	1,004,915	11,486	102 12	130 1	$6\frac{3}{8}$
1862	183,313	928,213	11,562	100 12	127 13	$6\frac{1}{4}\frac{1}{16}$
1863	169,971	832,152	10,896	98 17	120 9	$6\frac{1}{8}$
1864	165,611	854,116	10,373	101 8	124 17	$6\frac{1}{4}$
1865	159,409	753,427	9,850	94 7	125 3	$6\frac{1}{4}$

Production of Copper in the United Kingdom during the last five years.

Date.	Mines.	Copper Ore.	Value of Ore.	Copper produce.	Estimated value of Metallic Copper.
	No.	Tons.	£ s.	Tons.	£
1861	175	231,487	1,364,727 13	15,331	1,572,480
1862	230	224,171	1,216,775 13	14,843	1,493,241
1863	222	210,947	1,100,554 2	14,247	1,409,608
1864	215	214,604	1,155,471 00	13,302	1,350,699
1865	203	98,298	927,938	11,883	1,134,720

Copper Ore and Regulus imported since 1859.

	Copper ore.	Regulus.		Copper ore.	Regulus.
	Tons.	Tons.		Tons.	Tons.
1860 - -	76,285	21,032	1863 - -	80,693	21,406
1861 - -	74,163	20,317	1864 - -	67,286	26,018
1862 - -	82,054	35,388	1865 - -	82,562	39,686

Digitized by Google

Copper Exports from Great Britain.

	British Copper.	Foreign Copper.	Total.		British Copper.	Foreign Copper.	Total.
	Tons.	Tons.	Tons.		Tons.	Tons.	Tons.
1859 - -	22,788	3,475	26,263	1863 - -	43,083	6,323	49,406
1860 - -	26,116	3,687	29,803	1864 - -	36,892	9,024	45,916
1861 - -	21,779	3,938	25,717	1865 - -	31,609	10,733	42,342
1862 - -	27,919	8,678	36,597				

COPPERING IRON AND ZINC.—The great advantages which would arise from perfecting a plan by which the easily oxidisable metals, such as iron and zinc, could be coated with copper at a cheap rate, induced Messrs. Elsner and Philip, of Berlin, to undertake a series of experiments, to ascertain if such could not be effected more economically than by employing cyanide of potassium; and in this way they have been successful. For coating iron, the article must be well cleaned in rain or soft water, and rubbed before immersing it in the solution, which may be either chloride of potassium, chloride of sodium, with a little caustic ammonia added, or tartrate of potash with a small portion of carbonate of potash. At the extremity of the wire, in connection with the copper or negative pole of the battery, is fixed a thin flattened copper plate, and the article to be coated is attached to the wire from the zinc, or positive pole, and both are then immersed in the exciting solution, the copper plate only partially. The liquid should be kept at a temperature of from 15° to 20° C., and the success of the operation depends greatly on the strength and uniformity of the galvanic current. When the chlorides are employed, the coating is of a dark, natural copper colour; and with tartrate of potash it assumes a red tinge, similar to the red oxide of copper. When sufficiently covered, the article is rubbed in sawdust, and exposed to a current of warm air to dry, when they will take a fine polish and resist all atmospheric influence. In coating zinc with copper, the same general principles will apply as for iron, only observing that in proportion to the size of the article, the galvanic current must be less powerful for zinc. The surfaces must be perfectly smooth, and for this reason it is well to rub them thoroughly with fine sand, and polish with a brush.

COPPER MEDALS AND MEDALLIONS may be readily made in the following way:—Let black oxide of copper, in fine powder, be reduced to the metallic state, by exposing it to a stream of hydrogen, in a gun-barrel, heated barely to redness. The metallic powder thus obtained is to be sifted, through crape, upon the surface of the mould, to the thickness of $\frac{1}{4}$th or $\frac{1}{3}$rd of an inch, and is then to be strongly pressed upon it, first by the hand, and lastly by percussion with a hammer. The impression thus formed is beautiful; but it requires much more solidity by exposure to a red heat, out of contact with air. Such medals are said to have more tenacity than melted copper, and to be sharply defined.

COPPER, PURIFYING.—Copper may be purified by melting 100 parts of it with 10 parts of copper scales (black oxide), along with 10 parts of ground bottle glass or other flux. Mr. Thompson, who received a gold medal from the Society of Arts for this invention, says, that after the copper has been kept in fusion for half an hour, it will be found at the bottom of the crucible perfectly pure; while the iron, lead, arsenic, &c., with which the metal is usually contaminated, will be oxidised by the scales, and will dissolve in the flux, or be volatilised. Thus he has obtained perfectly pure copper from brass, bell-metal, gun-metal, and several other alloys, containing from 4 up to 50 per cent. of iron, lead, antimony, bismuth, arsenic, &c. The scales of copper are cheap, being the product of every large manufactory where that metal is worked.

COPPER, ACETATE OF. See VERDIGRIS.

COPPER, NITRATE OF, prepared by dissolving copper in moderately strong nitric acid, and evaporating to crystallisation. Its formula is CuO,NO^5. This salt is used to produce a fine green in fireworks.

COPPER, SULPHATE OF, called in commerce BLUE VITRIOL. BLUE STONE. BLUE COPPERAS.—This salt is frequently prepared by roasting copper pyrites with free access of air. It is also obtained by heating old copper with sulphur, by which a subsulphide of copper is produced; this is converted into sulphate, by roasting in contact with air. Large quantities of sulphate of copper are obtained in the process of silver refining. See PYRITES and SILVER.

COPPERAS. See IRON PYRITES.

COPROLITES, or FOSSIL MANURE.—These curious organic remains are found near the outcrops of the Upper Green Sand. Attention was first directed to them by professor Henslow, and subsequently by Dr. Buckland.

Digitized by Google

Comparative Analysis of Bones.

	Phosphates.	Carbonate of Lime.
Recent human bones - - -	81·09	10·03
Ancient ditto from Roman *tumulus* -	76·38	10·13
Fossil bone from the crag - -	60·02	18·00
Recent ox bones - - - -	57·35	3·85
Sheep bones - - - - -	80·00	19·03
Bones of the hen - - - -	88·09	10·04
„ frog - - - -	95·02	2·04
„ fishes - - - -	91·09	5·03

The following two samples from the coast of Suffolk were found to consist of—

	I.	II.
Water with a little organic matter -	4·00	3·560
Salts soluble in water (chloride of sodium and sulphate of soda) -	traces	traces
Carbonate of lime - - -	10·280	8·959
do. magnesia - - -	a trace	a trace
Sulphate of lime - - -	distinct traces	0·611
Phosphate of lime ($3CaO,PO^5$) -	70·920 = PO^5 32·765	69·099 = PO^5 31·924
do. magnesia - - -	traces only	traces
Perphosphate of iron ($2Fe^2O^3,3PO^5$)	6·850 = PO^5 3·244	8·616 = PO^5 4·081
Phosphate of alumina ($2Al^2O^3,3PO^5$)	1·550 = PO^5 0·870	2·026 = PO^5 1·158
Oxide of manganese - - -	traces	traces
Fluoride of calcium - - -	0·608	0·804
Silicic acid coloured red by a little undecomposed silicate of iron -	5·792	6·309
	100·000 = PO^5 36·889	100·000 = PO^5 37·16

I. Fifty grains of the first specimen, in fine powder, when burnt with potash lime, furnished 0·20 gr. of plantino-chloride of ammonium, which is equivalent to 0·0254 per cent. of nitrogen.

In an excellent paper "On the Phosphoric Strata of the Chalk Formations," published in the first number of the Journal of the Royal Agricultural Society of England for last year, Mr. Way observes, that he has found the coprolites from this district to contain from 52 to 54 per cent. of bone-earth phosphate; and that Dr. Gilbert had informed him, that in several analyses which he had made of samples taken from several tons of the ground coprolites, he had found the proportion of phosphate of lime to vary between 55 and 57 per cent. Mr. Nesbit (Quart. Journ. of Chem. Soc. Part III. p. 235) found from 22·30 to 28·74 per cent. of phosphoric acid, which is equivalent to from 48·31 to 59·07 of tribasic phosphate, in those from the tertiary deposits of this county.

II. This one was brought from the same part of the coast as the preceding; but differed from them in its irregularity of form, and in exhibiting imperfect evidences of a bony structure. The specific gravity it was found impossible to determine, on account of the numerous air cavities it contained.

Analysis showed it to possess the following percentage composition:—

Water driven off at from 300° to 350° F. - -	2·600
do. and organic matters expelled at a red heat -	9·000
Chloride of sodium, &c. - - - -	evident traces
Carbonate of lime - - - - -	39·500
do. magnesia - - - - -	0·520
Sulphate of lime - - - - -	distinct traces
Phosphate of lime (tribasic) - - - -	15·860 = PO^5 5·287
do. magnesia - - - - -	traces
Perphosphate of iron - - - - -	9·200 = PO^5 4·358
Phosphate of alumina - - - - -	4·708 = PO^5 2·764
Peroxide of iron - - - - -	none
Alumina - - - - - -	6·212
Fluoride of calcium - - - - -	1·698
Silicic acid - - - - - -	10·601
	99·899 = PO^5 12·409

The proportion of nitrogen in this specimen was not estimated.

Digitized by Google

III. This coprolite was discovered in the lias strata of Lyme Regis.

It was rather large, being above 9 oz. in weight, was of a greyish colour, and when broken exhibited some traces of a crystalline structure. It was considerably softer than either of the preceding, and furnished a greyish-white powder. Many scales of different extinct fishes, and other organic remains, were to be perceived on the external surface; the greater proportion of them appeared to belong to a species of fish which is known to ichthyologists by the name of *Pholidophorus limbatus*. Its specific gravity was about 2·644 or 2·700, and the composition per cent. was as follows:—

	I.	II.	Mean.	
Water driven off at from 300° to 350° F.	2·560	2·668	2·6140	
Water and organic matters expelled at a red heat	3·680	3·456	3·5680	
Chloride of sodium, with some sulphate of soda	traces	traces	traces	
Carbonate of lime	23·640	23·708	23·6740	
do. of magnesia	none	none	none	
Sulphate of lime	1·740	1·801	1·7705	
Phosphate of do. (tribasic)	60·726	60·813	60·7695 = PO^5	28·047
do. magnesia	a little	a little	a little	
Perphosphate of iron	3·980	4·135	4·0575 = PO^5	1·922
Phosphate of alumina	a little	a little	a little	
Peroxide of iron	2·094	1·894	1·9940	
Alumina	none	none	none	
Silicic acid, with fluoride of calcium and loss	1·580	1·525	1·5525	
	100·000	100·000	100·0000 = PO^5	29·969*

The proportion of nitrogen in this specimen was rather large, being 0·0826 per cent. —*Thornton J. Herapath.*

M. de Molon writes (*L'Institut*, Feb. 1848), that in the course of the year 1857, in the eighteen departments of France, they employed as manure 2,250,000 kilogrammes (of 2·204 avoirdupoise pounds) of fossil phosphate of lime; and after collecting reports of the results obtained, its employment has been generally considered as an advantage. But for obtaining all the good effects which attend the use of this substance, it appears to him that it ought to be employed in the following different conditions upon different soils:—

1st. In argillaceous, schistose, granitic, and siliceous soils, rich in organic detritus, in the natural state in powder.

2nd. In the same earths when they are poor in organic matter; above all, if they have been cultivated for a long time, or if they have been treated with lime; in the state of powder, mixed with fermentible animal matter.

3rd. In calcareous soils, and particularly cretaceous ones, in the state of powder, treated by 20 to 25 per cent. of hydrochloric acid, and the addition of organic matter.

COPYING. A new and important quality of writing-inks was introduced by the indefatigable James Watt, in 1780, who in that year took out a patent for copying letters and other written documents by pressure. The *modus operandi* being to have mixed with the ink some saccharine or gummy matter, which should prevent its entire absorption into the paper, and thus render the writing capable of having a copy taken from it when pressed against a damp sheet of common tissue paper. But although this process was very imperfect, the writing generally being much besmeared by the damping, and the copies, in many cases, only capable of being read with great difficulty, it was not for seventy-seven years after the invention of Watt that any improvement in such inks was attempted. The firm of Underwood and Burt patented a method of taking copies by the action of a chemically prepared paper, in a chemical ink, by which, not only are far superior copies taken, and the original not at all damaged, but many copies may be taken at one time from a single document. Printed matter may also be copied at the same time, on the same beautiful principle. We give the specification of Mr. Underwood:—

"But while the means employed for producing the desired effects may be varied, I prefer the following for general use:—I damp the paper, parchment, or other material which I desire to copy upon, with a solution of 200 grains of the yellow or neutral chromate of potash dissolved in 1 gallon of distilled water, and either use it immedi-

* In the first of these analyses, the phosphoric acid was estimated by M. Schulze's method, as perphosphate of iron; in the second, as phosphate of lead.

Digitized by Google

ately, or dry it and subsequently damp it with water as it is required for use. I then prepare the material which I use for producing the characters or marks, and which may be called copying ink, by simply dissolving (in a water bath) pure extract of logwood in distilled water; or, for printing, I use a varnish or other similar material soluble in water, and dust or throw over it powdered extract of logwood. If I desire to take twenty copies from an original, I use about six pounds of the pure extract of logwood to a gallon of distilled water; but a larger number of copies may be taken by dusting or throwing over the original, before the ink has thoroughly dried, a powder composed of five parts of powdered extract of logwood, one part of powdered gum arabic, and one part of powdered tragacanth. When I desire to print from an original, in producing which I have used ink prepared as before described, I proceed by damping six sheets of paper, prepared as before described, and having taken off all superfluous moisture with good blotting paper, I place the original upon the upper sheet and press the whole for about half a minute in a copying press; I then remove the original, and in its place put six other sheets of the prepared paper in a damp state, and subject the whole to pressure for about a quarter of an hour. I then take five other prepared sheets in a damp state, and having laid the original upon them, press them together for about two minutes, then replace the original by three other prepared and damped sheets, and press the whole together for about a quarter of an hour. The extract of logwood so acts upon the neutral chromate of potash that I thus obtain twenty good clear fac-similes of the original matter or design."

They have also produced an Indian ink on the same principle, which, when used in the preparation of architectural plans, maps, &c., will give one or more clear copies of even the finest lines. The only point to be observed in the taking of such copies, is that as they are done to a scale, they must be kept pressed in close contact with the original, till they are perfectly dry, because if not they will shrink in drying, and the scale be spoilt.

The most complete information on this subject, and that of inks generally, is to be found in a memoir published in the Journal of the Society of Arts by Mr. J. Underwood.

COQUILLA NUTS. These nuts are produced in the Brazils by the *Attalea funifera*. They are suitable for a great variety of small ornamental works, and are manufactured into the knobs of umbrellas and parasols.

CORAH. An India pattern silk handkerchief.

CORAL (*Corail*, Fr.; *Koralle*, Germ.) is a calcareous substance, formed by a species of sea polypus, which construct in concert immense ramified habitations, consisting of an assemblage of small cells, each the abode of an animal. The coral is, therefore, a real polypary, which resembles a tree stripped of its leaves. It has no roots, but a foot not unlike a hemispherical skull-cap, which applies closely to every point of the surface upon which it stands, and is therefore difficult to detach. It merely serves as a basis or support to the coral, but contributes in no manner to its growth, like the root of an ordinary tree, for detached pieces have often been found at the bottom of the sea in a state of increase and reproduction. From the above base a stem, usually single, proceeds, which seldom surpasses an inch in diameter, and from it a small number of branches ramify in very irregular directions, which are studded over with cells, each containing an insect. The polypi, when they extend their arms, feelers, or tentacula, resemble flowers, whence, as well as from the form of the coral, they were classed among vegetable productions. They are now styled zoophites by the writers upon Natural History.

The finest coral is found in the Mediterranean. It is fished for on the coasts of Provence, and constitutes a considerable branch of the trade at Marseilles. The coral is attached to the submarine rocks, as a tree is by the roots, but the branches, instead of growing upwards, shoot downwards towards the bottom of the sea; a conformation favourable to breaking them off and bringing them up. For this kind of fishing, eight men, who are excellent divers, equip a felucca or small boat, called commonly a coralline. They carry with them a large wooden cross, with strong, equal, and long arms, each bearing a stout bag-net. They attach a strong rope to the middle of the cross, and let it down horizontally into the sea, having loaded its centre with a weight sufficient to sink it. The diver follows the cross, pushes one arm of it after another into the hollows of the rocks, so as to entangle the coral in the nets; then his comrades in the boat pull up the cross and its accompaniments.

Coral fishing is nearly as dangerous as pearl fishing, on account of the number of sharks which frequent the seas where it is carried on. One would think the diving-bell in its now very practicable state might be employed with great advantage for both purposes.

Coral is mostly of a fine red colour, but occasionally it is flesh-coloured, yellow, or white. The red is preferred for making necklaces, crosses, and other female ornaments. It is worked up like precious stones. See LAPIDARY.

Digitized by Google

Coral beads have ever been fashionable ornaments. Dr. Gilchrist states: "Coral beads are in high estimation throughout Hindostan for necklaces and bracelets for women. These beads are manufactured from the red coral fished up in various parts of Asia; they are very costly, especially when they run to any size; and they are generally sold by their weight of silver."

Coral beads were always favourite articles for ornament even in this country; and in the "Illustrations of Manners and Expences of antient times in England," by Nicholls, 1798, we find the following entries from "the churchwardens' accompts of St. Mary Hill, London," containing "the inventory of John Port, layt the king's servant, as after followeth:"—

	£	s.	d.
"Item of other old gear found in the house:—			
"Item *one oz. and ½ of corall* - - - - - - - - -	0	2	6
"Jewels for her body.			
"Item, a pair of coral beds, gaudyed with gaudys of silver and gilt, 10 oz. at 3s. 4d.	1	13	4

(John Port died in 1524.)

CORDAGE;—*Cordage*. Fr.; *Tauwerk*, Germ.) Cordage may be, and is, made of a great variety of materials. In Europe, however, it is mostly formed of hemp, although now much cordage is made of coir. See COIR.

Professor Robinson proposed the following rule for determining the strength of cordage:—Square the circumference of a rope in inches; one fifth of the product will be the number of tons' weight which it will bear: this is, however, uncertain.

Our *importations* of cordage, in 1863 and 1864, were

Cordage.	1863.		1864.	
	Cwts.	Computed real value.	Cwts.	Computed real value.
From Russia - - - - -	7,453	£16,371	8,304	£16,508
Hamburg - - - -	237	517	618	1,268
Bremen - - - -	242	532	590	1,143
Holland - - - -	278	609	539	1,102
Australia - - - -	579	1,275		
United States - - -				
North Atlantic Ports - -	—	—	5,697	11,616
Other parts - - - -	1,098	2,402	450	925
	9,887	21,706	16,198	82,562

CORDOVAN. A leather made at Cordova in Spain from goat-skin. Leather made from horse-hide is called cordovan in this country.

CORDUROY. A kind of ribbed cloth. See FUSTIAN.

CORF or CORVE. A basket for carrying coals; a frame of wood to load coals on; a sledge to transport minerals on.

CORIANDER SEED. The fruit of the *Coriandrum Sativum*, used as a seasoning, and also for the preparation of an essential oil.

CORK (*Liège*, Fr.; *Kork*, Germ.) is the bark of the *Quercus liber*, Linn., a species of oak-tree which grows abundantly in the southern provinces of France, Italy, and Spain. The bark is taken off by making coronal incisions above and below the portions to be removed; vertical incisions are then made from one of these circles to another whereby the bark may be easily detached. It is steeped in water to soften it, in order to be flattened by pressure under heavy stones, then dried at a fire, which blackens its surface. The corks are bound up in bales and sent into the market.

There are two sorts of cork, the white and the black; the former grows in France and the latter in Spain. The cakes of the white are usually more beautiful, more smooth, lighter, freer from knots and cracks, of a finer grey, and of a yellowish-grey colour on both sides, and cut more smoothly than the black. When this cork is burnt in close vessels it forms the pigment called *Spanish black*.

Cork is employed to fabricate not only bottle corks but small architectural and geognostic models, which are very convenient from their lightness and solidity.

The cork-cutters divide the boards of cork first into narrow fillets, which they afterwards subdivide into short parallelopipeds, and then round these into the proper conical or cylindrical shape. The bench before which they work is a square table, where four workmen are seated, one at every side, the table being furnished with a ledge to prevent the corks from falling over. The cork-cutter's knife is a broad blade, very thin, and fine edged. It is whetted from time to time upon a fine-grained dry whetstone. The workman ought not to draw his knife edge over the cork, for

Digitized by Google

he would thus make misses, and might cut himself, but rather the cork over the knife-edge. He should seize the knife with his left hand, rest the back of it upon the edge of the table, into one of the notches, made to prevent it from slipping, and merely turn its edge sometimes upright and sometimes to one side. Then holding the squared piece of cork by its two ends, between his finger and his thumb, he presents it in the direction of its length to the edge; the cork is now smoothly cut into a rounded form by being dexterously turned in the hand. He next cuts off the two ends, when the cork is finished and thrown into the proper basket alongside, to be afterwards sorted by women or boys.

Of late years a much thicker kind of cork boards have been imported from Catalonia, from which longer and better corks may be made. In the art of cork-cutting the French surpass the English, as any one may convince himself by comparing the corks of their champagne bottles with those made in this country.

Cork, on account of its bouyancy in water, is extensively employed for making floats to fishermen's nets, and in the construction of life-boats. Its impermeability to water has led to its employment for inner soles to shoes.

When cork is rasped into powder, and subjected to chemical solvents, such as alcohol, &c., it leaves 70 per cent. of an insoluble substance, called *suberine*. When it is treated with nitric acid, it yields the following remarkable products:—White fibrous matter 0·18, resin 14·72, oxalic acid 16·00, suberic acid (peculiar acid of cork) 14·5, in 100 parts.

A patent was obtained some years ago for machine cork-cutting. The cutting of the cork into slips is effected by fixing it upon the sliding bed of an engine, and bringing it, by a progressive motion, under the action of a circular knife, by which it is cut into slips of equal widths. The nature or construction of a machine to be used for this purpose may be easily conceived, as it possesses no new mechanical feature, except in its application to cutting cork. The motion communicated to the knife by hand, steam, horse, or other power, moves at the same time the bed also which carries the cork to be cut.

The second part of the invention, viz., that for separating the cork into square pieces, after it has been cut into slips as above, is effected by a moving bed as before, upon which the slips are to be placed and submitted to the action of a cutting lever, which may be regulated to chop the cork into pieces of any given length.

The third part of the invention. viz., that for rounding or finishing the corks, consists of an engine to which is attached a circular knife that turns vertically, and a carriage or frame upon its side that revolves on its axle horizontally.

The carriage or frame contains several pairs of clamps intended respectively to hold a piece of the square cut cork by pressing it at the ends, and carrying it lengthways perpendicularly; which clamps are contrived to have a spindle motion, by means of a pinion at the lower end of their axles, working into a spur-wheel.

The machinery, thus arranged, is put in motion by means of bands and drum-wheels, or any other contrivance which may be found most eligible; and at the same time that the circular knife revolves vertically, the frame containing the clamps with the pieces of cork, turns horizontally, bringing the corks, one by one, up to the edge of the knife, when, to render each piece of cork cylindrical, the clamps, as above described, revolve upon their axes, independently of their carriage, by which means the whole circumference of the cork is brought under the action of the knife, the superfluous parts are uniformly pared off, and the cork finished smooth and cylindrical.

Imports of Cork in 1863 and 1864:—

	1863.		1864.	
	Tons.	Computed real value.	Tons.	Computed real value.
Cork:—				
From Portugal - - -	4,574	£148,657	5,011	£162,861
Spain - - - -	224	7,840	188	6,180
Other parts - - -	25	816	13	424
	4,823	157,313	5,212	169,865
Corks, ready made:—	lbs.		lbs.	
From France - - -	1,144,148	£61,975	1,074,860	£58,222
Portugal - - -	146,665	7,945	139,727	7,569
Spain - - - -	148,621	8,050	78,153	4,233
Other parts - -	17,892	970	18,983	1,029
	1,457,326	78,940	1,311,723	71,053

Digitized by Google

CORNEO. An ore of quicksilver found in Spain, is so called locally.

COROMANDEL WOOD. The wood of the *Dyospyros hirsuta*.

COROZO, COROSSO.—*Vegetable Ivory*.—The commercial names for the fruit of the *Phytelephas macrocarpa*, a species of Brazilian palm. It is called the Tagua nut in South America. It grows on the borders of the river Magdalena in great abundance, and the nuts are largely imported. The natives of the districts where the tree grows have been in the habit from time immemorial of using this vegetable ivory for making buttons, heads of walking-sticks, &c. It is used largely in this country in the place of ivory; but it does not keep its colour well.

CORROSIVE SUBLIMATE, *Mercury, Chloride of*, or *Protochloride* (*Deutochlorure de mercure*, Fr.; *Aetzendes quecksilber sublimat*, Germ.), is made by subliming a mixture of $2\frac{1}{2}$ parts of sulphate of oxide of mercury, and 1 part of sea-salt, in a stoneware cucurbit. The sublimate rises in vapour, and encrusts the globular glass capital with a white mass of small prismatic needles. Its specific gravity is 6·225. Its taste is acrid, stypto-metallic, and exceedingly unpleasant. It is soluble in 16 parts of water, at the ordinary temperature, and in less than three times its weight. It dissolves in $2\frac{1}{4}$ times its weight of cold alcohol. It is a very deadly poison. Raw white of egg swallowed in profusion is the best antidote. A solution of corrosive sublimate has been long employed for preserving soft anatomical preparations. By this means the corpse of Colonel Morland was embalmed, in order to be brought from the seat of war to Paris. His features remained unaltered, only his skin was brown, and his body was so hard as to sound like a piece of wood when struck with a hammer.

In the work upon the dry rot, published by Mr. Knowles, secretary of the committee of inspectors of the navy, in 1821, corrosive sublimate is enumerated among the chemical substances which had been prescribed for preventing the dry rot in timber; and it is well known that Sir H. Davy had, several years before that date, used and recommended to the Admiralty and Navy Board corrosive sublimate as an anti-dry-rot application. It has been since extensively employed by a joint-stock company for the same purpose, under the title of Kyan's patent.

The preservative liquid known as *Goadby's* solution, which is employed for preserving wood and anatomical preparations, is composed as follows:—Bay salt, 4 oz.; alum, 2 oz.; corrosive sublimate, 2 grains; water, 2 pints.

The composition of corrosive sublimate is—

Mercury	100·	73·86		
Chlorine	35·5	26·14		
	135·5	100·00	H. M. N.	

See MERCURY.

CORRUGATED IRON. A process has been introduced for giving strength to sheet iron, by bending it into folds or wrinkles; the iron so treated is thus named.

The iron shed at the London Terminus of the Eastern Counties Railway, constructed of corrugated iron, has been described by Mr. W. Evill, jun. The entire length is 216 feet, and consists of three roofs, the centre of 36 feet span, rising 9 feet, and the side-roofs 20 feet 6 inches, with a rise of 4 feet.

The corrugated wrought iron is composed of sheets No. 16 wire guage, or $\frac{1}{11}$th of an inch in thickness; the weight per foot is 3 lbs.; the whole weight of the centre roof of 10,235 superficial feet being scarcely $13\frac{3}{4}$ tons, and the side-roofs, of 5,405 square feet, weigh $7\frac{1}{4}$ tons.

The whole roof was erected by Messrs. Walker and Sons, Bermondsey, the holders of Palmer's patent, at a charge of 6*l*. 10*s*. per 100 superficial feet, including fixing, and the whole roofs cost 1,365*l*., and might now be erected for half the cost, the patent having expired, and increased facilities existing.

Many corrugated roofs have been erected: one at St. Katharine's Dock. At the entrance of the London Docks there is one 40 feet span and 225 feet long. On the London, Birmingham, Great Western, and other railways they have been recently employed.

Corrugated sheet-iron is now employed for roofing buildings, as being much lighter than slate, and it is employed in the construction of churches, manufactories, and dwelling-houses which are not intended to be of a very permanent character.

Iron appears to have great strength given to it by this change of form; a single sheet, so thin as to be unable to bear its own vertical position, will bear 700 lbs. after corrugation, without bending.

Cast-iron has been corrugated. Mr. Palmer has patented this form, and at Swansea a bridge of three arches one of 50 and two of 48 feet span, has been erected.

CORUNDUM. This mineral species includes sapphire, corundum stone, and emery. It consists of pure alumina coloured by admixture with oxide of iron.

Digitized by Google

	Blue Sapphire, China.		Corundum, Bengal.	Emery, Naxos.
Alumina -	98·5	84·0	89·5	86·0
Lime - -	0·5	·0	0·0	3·0
Silica - -	0·0	·5	5·5	3·0
Oxide of iron	1·0	7·5	1·25	4·0
	100.0 Klapr.	98·0 Chen.	98·2 Tennant.	96·0 Tennant.

The perfectly white crystals of sapphire are pure alumina.

There are two varieties of the perfect corundum; the sapphire so called, and the oriental ruby; of which the latter has a rather less specific gravity, being 3·9 against 3·97. Their form is a slightly acute rhomboid, which possesses double refraction, and is inferior in hardness only to the diamond. The sapphire occurs also in 6-sided prisms.

Corundum, or *Corone*, is the Indian name for the mineral called also Adamantine spar. In Canton the Chinese specimens have a grey colour, the edges of thin pieces being transparent; the variety from India is whiter, and this is called corundum. The extreme hardness of this substance, scratching everything except diamond, renders it remarkably valuable to lapidaries and seal-cutters. It is but little harder than the ruby, sapphire, or oriental topaz. It is far superior to emery, especially for grinding, as it adheres like diamond dust. It is used throughout India and China for polishing stones, &c.

COSTEANING, a mining term, from the old Cornish *Cothas stean*, fallen or dropped tin. It signifies the practice of sinking pits in search of lodes across the line of direction which the tin lodes usually traverse in Cornwall.

COTTON DYEING. See DYEING.

COTTON FACTORY. See FACTORY.

COTTON (GUN). See GUN COTTON.

COTTON GIN. One of the most recent improvements in the separation of cotton fibre from the seed, has been effected by the introduction of the new cotton gin invented by Mr. E. A. Cowper, M.I.C.E. This machine acts in a very similar manner to a person's finger and thumb in taking off fibre from the seed, though in place of taking hold of small tufts, in a slow manner, it takes hold of a good heavy fringe of fibre right across the whole width of the machine, and detaches it from the seeds; and this it does about 400 times a minute.

This machine is entirely intermittent in its action, as it nips the fibre firmly, whilst an instrument pushes off the seed; then it releases its hold, and allows the clean fibre to pass away, whilst a fresh quantity is brought in, to be held in like manner, and have its seeds pushed off. There is no sliding and rubbing action, as in the MacCarthy Gin; or pinching of the seed between the rollers, as in the Churka; or sawing of the fibre, as in the Saw Gin; and there are, in fact, no rubbing parts in the gin, except the spindles and joints in their bearings. The closing of the nipping blade upon the fibre is so like the action of a jaw, that it has been popularly called the "Lock-Jaw" Cotton Gin.

Fig. 578*a* shows a perspective view, and fig. 578*b* a section, of this patent gin: N is the nipping blade, R the roller on which are arranged the strips of leather, L, which come into action one after the other, in order to form one side of the pair of jaws to act with the nipping blade; fine combs, C, are also attached to the roller between the strips of leather (when short-stapled cotton is being combed). S is a shaft, with cranks, to move the beater, B, and excentrics to move the nipping blade, N, which latter is confined by links, K, causing it to move in a curved elliptical path. F is a bar to fill up the space between the roller and beater, and D is a doffer to take the clean cotton off the roller.

At the time when the nipping blade N approaches the roller R, it is moving in the same direction, and at the same surface speed; and as it approaches it nips upon the fibre, or locks it fast between its edge and the strip of leather on the roller; the beater B then comes up quickly, and pushes off the seed a short distance, thus separating the fibre where it is held close up to the seed, and obtaining it, necessarily, of its full natural length.

The clean cotton then passes away, in consequence of the nipping blade leaving the roller a small distance; and as it returns (in the opposite direction of the roller) to its first position, more cotton fibre passes in between the nipping blade and the roller, though it is impossible that seeds can enter, as the nipping blade never lifts more than half the diameter of a seed; then the nipping blade closes upon the fibre, and

Digitized by Google

the beater (which before had retired directly it had done its work) rises and pushes off more seed as before, and the operation continues, the seed cotton sliding down a steep feed trough, terminated by a grid, to allow the seeds to drop through.

Thus, although the machine acts intermittently, it gets through a very large amount of work, in consequence of each mouthful being efficiently separated from the seeds that are drawn up close to the edge of the nipping blade; in fact, it *feeds* almost as fast as a "Saw Gin," and *gins* all that is taken in, delivering the fibre about one-eighth

578*a*

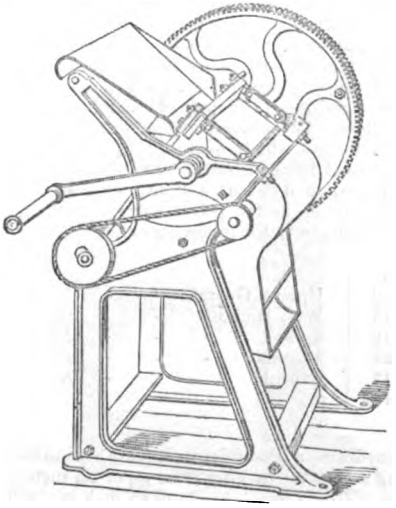

578*b*

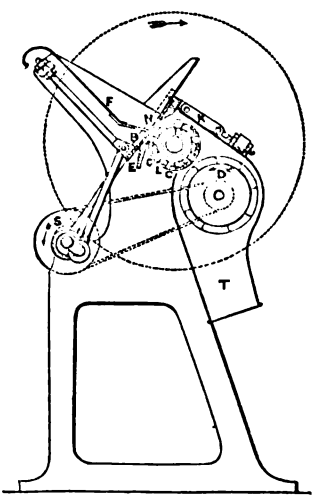

of an inch longer than the "MacCarthy" or "Churka," and of course very much longer than any Saw Gin. This result is particularly noticeable in any sample of seed cotton that is at all tender in the fibre, such as most of the Indian kinds, whether grown from native or American seed, and in Egyptian, Macedonian, &c.

There is no sea-horse hide or other expensive leather used on the roller for short-stapled cotton, as is the case in the MacCarthy Gin, where the friction is so great that new leathers have to be put on several times in the course of a year, at an expense commonly equal to the first cost of the machine. For ginning long-stapled cotton, such as Sea Island or good Egyptian, a roller covered with sea-horse leather is used; and from the fibre of the leather never being rubbed down, it stands well up, and takes in cotton very quickly. There being *no friction*, but only *pressure* on the roller of the "Lock-Jaw Gin," the leather will seldom require renewing; the steel plates forming the comb surfaces will last several years without being sharpened, and the nipping blade being subjected to pressure only, will also last for many years.

In consequence of the nipping blade lifting a little off the roller at every stroke, it is quite impossible that any part of it can become inoperative from small portions of seed or leaf becoming jammed or gagging in between the roller and the blade, as is the case every few minutes with a MacCarthy Gin, thus causing some four to eight inches of the roller to become useless until the gin is stopped and reversed, so as to clear it.

The amount of power required to drive this gin is also materially lessened, by the absence of friction, as compared with the ordinary roller gins.

The Report of the Commissioners appointed to examine and value the samples of cotton exhibited at the International Exhibition of 1862, states that the average loss through "bad ginning" amounts to the sum of 2·67*d.* per lb. on the cotton.

The well-known defect of the "Saw Gin" is that it chops up all tender or long-stapled fibre; and the only reason for its continued use for ginning the tough and short fibred New Orleans cotton, is that it turns out so much more cotton than other ordinary gins. As might be expected, from the construction of the "Lock-Jaw Gin," it is adapted for all kinds of cotton, whether long or short-stapled; and owing to the careful manner in which the fibre is treated, it is turned out uninjured by breakage &c., and worth fully a penny per lb. more than cotton from MacCarthy or Churka Gins, and twopence-halfpenny more than cotton from a Saw Gin.

A hand gin will turn out about 13 pounds of short-stapled Indian, or 27 pounds of

Digitized by Google

Egyptian cleaned cotton per hour, when working at the rate of fifty revolutions per minute.

This is from 1 to 2 lbs. per inch of width per hour, or from two to three times what an ordinary MacCarthy Gin will do.

COTTON AND COTTON SPINNING. *Filature de Coton*, Fr.; *Baumwollenspinnerie*, Germ.) Cotton is a filamentous down, which invests the seeds of the plant called *gossypium* by Linnæus, and placed by him in the class *monadelphia* and order *monandria*, but belonging to the natural family of *malvaceæ*. It has a cup-shaped calyx, obtusely five-toothed, inclosed in a three-cleft exterior calyx; the leaflets are united at their base, of a heart shape and toothed; stigmas three to five; capsule three to five-celled and many-seeded; seeds bearing a downy wool. Thirteen species are described by Decandolle, but their characters are very uncertain, and no botanist can assign to a definite species of the plant the very dissimilar staples of the cotton filaments found in commerce. The leaves are generally palmate and hairy; and the blossoms are large, and of a beautiful yellow. The *gossypium religiosum* of Tranquebar has white blossoms in some of its varieties, to which, probably, the white cotton of Rome, cultivated in the Jardin des Plantes at Paris, belongs. The filaments differ in length, flexibility, tenacity, and thickness, in different cottons, whence the great difference of their value to the cotton-spinner, as the prices current in the market show. Thus, at Liverpool, on the 1st of June, 1866, the following values were assigned to the following cottons:—

	d.		d.		d.		d.
Sea-island	24	to	70	Upland Georgia	7	„	15¼
Demerara and Berbice	10	„	15	West Indian	10	„	15
Pernambuco	11	„	16	Surat	5½	„	11½
Egyptian	11	„	27	Madras	8	„	10
New Orleans	11	„	17	Bengal	5	„	8½
Bahia	11	„	14½				

The filaments of cotton, when examined with a good microscope, are seen to be more or less ribbon-like, and twisted; having a breadth varying from $\frac{1}{500}$ of an inch in the strongest Smyrna or candle wick cotton of the Levant, to $\frac{1}{2500}$ of an inch in the finest Sea-island.

The main distinction between cottons in the pod, is that of the black seeded and the green seeded; for the former part with their downy wool very readily to a pair of simple rollers, made to revolve nearly in contact, by the power of the human arm; while the latter retain the wool with much force, and require to be ginned, as the operation is called, by a powerful revolving circular saw-mechanism, usually driven by horse or water power.

Fig. 579, A B, is a roller, about 9 inches in diameter, which revolves in the direction of the arrow. This cylinder consists of a parallel series of oblique pointed circular saws made fast to one axis, and parted from each other by wooden rings nearly one inch and a half in thickness. Above the cylinder is a kind of hopper E F, into which the ginner throws the seed cotton, which falls upon a grating, up through which small segments of the saw-teeth project, so as to lay hold of the fibres in their revolution and pull them through, while the seeds being thus separated, roll down the slope of the grid, to be discharged from the spout I K. M is a cylindrical brush placed below the grating, which revolves against the saw teeth, so as to clear them of the adhering cotton filaments.

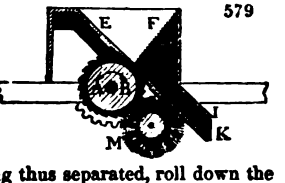

579

Fig. 580 is F. A. Calvert's patent toothed roller cotton gin. See COTTON GIN.

a is a perspective view, *b* is a sectional view. A is the box to hold seed cotton ready to be ginned; B is the top of the hopper; C is the fluted guard; D is the fine toothed roller; E the brush; F is the discharge pipe; and G is a suitable block on which the machine stands.

N.B. Over the handle in *fig. a* there is shown an arrow, indicating the direction of the motion. The handle should not be driven less than fifty turns per minute. The seed cotton should be fed into the hopper in small portions, and regularly throughout its whole length; at the same time care should be taken that a large quantity does not collect, as it will retard the operation. This gin is made from six inches to five feet wide; two persons can drive, with ease, a gin of this kind three feet wide, producing 200 lbs. of cleaned cotton per day, at the speed above stated. When driven by steam or water-power at the rate of 200 revolutions per minute, it will clean 400 lbs. each foot in length per day. It is well adapted for all classes of cotton, particu-

Digitized by Google

larly fast seed cotton, which has been valued at one penny per pound more when done on this gin than when done on the saw gin. It will be seen that there is no band or belt employed, hence the machine requires small power compared with other machines for like purposes.

After the cotton wool is thus separated from the seeds, it is packed in large canvas bags, commonly with the aid of a screw or hydraulic press, into a very dense bale, for the convenience of transport. Each of the American bags contains about 500 lbs. of cotton wool. When this cotton is delivered to the manufacturer, it is so foul and

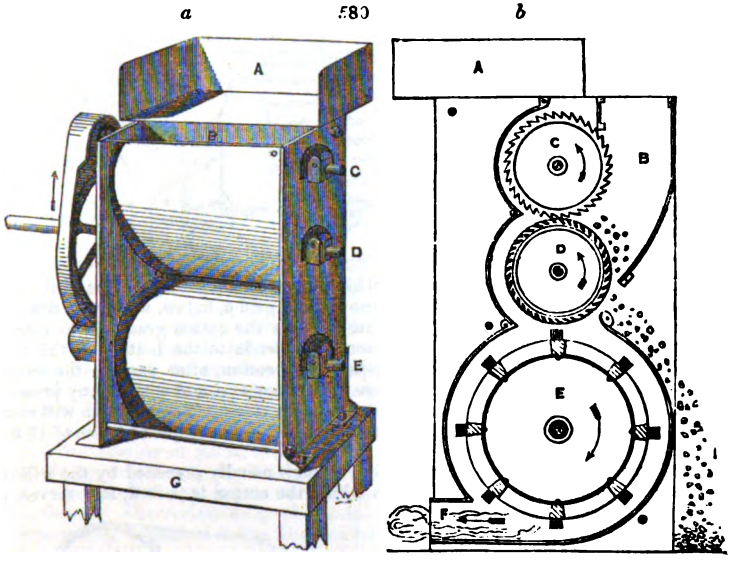

flocky, that he must clean and disentangle it with the utmost care, before he can subject it to the carding operation.

The *willow*, which was originally a cylindrical willow basket, whence its name, but is now a box made of wood or iron, with revolving iron spikes, is the first apparatus to which cotton wool is exposed, after it has been opened up, picked, and sorted by hand or a rake, in what is called a *bing*. The willow exercises a winnowing action, loosens the large flocks, and shakes out much of the dirt contained in them. The frame of the willow is about 4 feet wide, and turns with its spikes at the rapid rate of 400 revolutions per minute, whereby it tosses the cotton about with great violence. The heavy impurities fall down through the grid bottom. It is exposed, however, for only a few minutes to the action of this machine. For factories which work up chiefly the coarser and fouler cottons of India, and Upland Georgia, the conical self-acting willow, as constructed by Mr. Lillie at Manchester, is employed. In it, the cotton is put in at the narrow end of the truncated cone, which being spiked, and revolving rapidly within a nearly concentric case upon a horizontal axis wafts it on towards the wide end, while its impurities are partly shaken out through the grid or perforated bottom, and partly sucked up through revolving squirrel wire cages, by the centrifugal action of a fan. The cone of this huge machine makes from 400 to 600 turns per minute, and will clean 7200 pounds, or 24 bags, in a day.

After shaking out the grosser impurities by the willow, the cotton spinner proceeds to separate each individual filament of cotton wool from its fellow, so as to prepare it for carding, and to free it from every particle of foreign matter, whether lighter or heavier than itself. This second operation is performed by what are called batting (*beating*), scutching, and blowing machines, which are all now much the same, whatever difference of signification the name may have. Indeed, each machine not only beats and scutches, but blows.

Cotton Opener.

The most effective machine for this purpose is the recently patented cotton opener, by Crighton & Co., manufactured by them, and by Hethrington & Sons, Manchester, as from its peculiar arrangement it cannot damage the staple, whilst at the same time

Digitized by Google

its cleaning power is greater than that of any other machine in use at this period (1866). The engraving, *fig.* 580*a*, will clearly show the simple but effective nature of its construction. The cotton is fed down the open pipe *a*, to the bottom of the vertical beater *b*, without any intervening rollers; this beater, which is an inverted cone,

580*a*

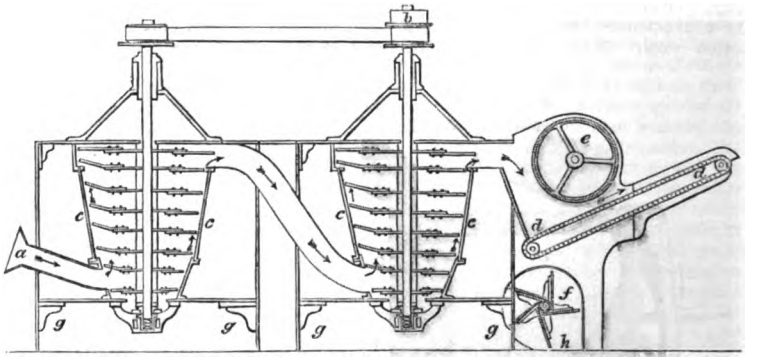

strikes the cotton against the grids *c c*, by which it is surrounded, and separates the dirt and leaf from the cotton, which freely fall into the dirt grid *g*, below, whilst the draught from the fan, aided by the shape of the beater, causes the cotton gradually to ascend, till it arrives at the discharge pipe, whence it descends to the bottom of the next beater, and is again similarly operated upon. The cotton, after passing the second beater, is discharged through a pipe to a cage *e*, and creeper *d*, and without any pressure leaves the machine in an open, well cleaned, fleecy state. The machine will clean 50,000 lbs. per week, requires about two horses' power, and occupies a space of 17 feet by 6 feet.

Fig. 581, the scutcher, or opening machine, though usually preceded by the willow, is often the first machine in a mill through which the cotton is passed, and serves, as

581

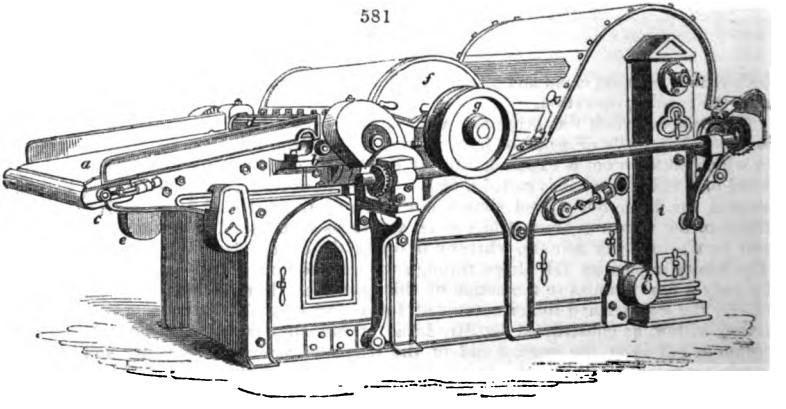

its name implies, to open the matted locks of cotton and separate its fibres, and at the same time to remove a large percentage of the seed and dirt which may have been packed with it.

The cotton is placed upon the travelling creeper marked *a*, which is made of a number of narrow slips, or laths, of wood, screwed to three endless bands of leather, the pivots of which are marked *b* and *c*. Motion is given to the roller *e*, by a wheel on the end of the feed roller, thus causing the creeper to advance, carrying with it the cotton to the feeding rollers *d*; these revolving slowly pass the cotton to the second smaller pair of fluted rollers, which serve it to the beater.

The top feeding rollers are weighted by levers and weights *e e*, and hold the cotton sufficiently tight for the beater to act upon it.

The beater is placed inside the machine at *f*, and extends quite across its breadth, its shaft or axis being shown with the speed fully upon it at *g*. The form of the beater

Digitized by Google

varies, but we give the following as an example:—On a shaft are placed four or five spiders, each having three or four arms; to the ends of these arms are attached steel blades, which pass along the whole length of the beater; two of the arms being shorter than the other arms of the spider, allows two of the blades to contain a double row of spikes in each, the points of the spikes being at the same distance from the axis as the other two blades. As the beater revolves about 800 turns per minute, the blades and spikes strike the cotton with considerable force as it is passed from the feeding rollers, and thus free it from many of its impurities.

582

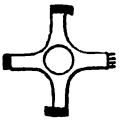

Immediately under the feed rollers and beater, are placed a number of wedge-shaped bars, which form a semi-circular grid, through the narrow openings of which the dirt and seeds fall to the floor, their removal being effected through the doors in the framing. To prevent the cotton passing with the dirt through the grid, a current of air, to draw the cotton from the beater to the cage, is produced by an exhaust fan (its axis being shown at *h*) receiving its motion from a pulley on the beater shaft. The projection *i* on the framing forms a pipe, through which the fan draws the air from the beater, passing on its way through a large revolving cage or cylinder, the periphery of which is formed of sheets of perforated metal, or wire gauze. Its axis is shown at K.

From the cage the cotton is delivered by a second travelling creeper and falls into a receptacle, from which it is weighed and made ready for the operations of the lap machine.

The operation of weighing the cotton, just referred to, being at all times an uncertain mode of producing strict regularity in the fleece, or lap of cotton, a beautiful little machine was invented by Messrs. Lord Brothers, machinists, Todmorden, for the purpose of dispensing with the operation of weighing, and yet securing perfect regularity. The invention is known as Lord's regulator, without which no lap machine may now be considered complete, as it not only saves wages, but insures regularity. In connection with this invention is another by the same firm, by means of which the trough or plate under the roller, or rollers, which supply cotton to the beater, instead of being in one piece as heretofore, is divided lengthwise into any convenient number of parts, each part being acted upon by a weight or spring, their object being to press the fibres between the trough, or plate, and the feed roller, so as to prevent them being drawn forward unevenly by the beater, and to prevent 'snatching.' The variations in the quantity of cotton fed to the machine produce corresponding variations in the distance between the divided trough or plate and the feed roller, and thus increase or diminish the quantity of cotton supplied to the machine, in such exact proportions as to secure (in combination with the regulator), one regular quantity being at all times supplied to the beater, and, therefore, an even lap.

There are few manufactures which require the aids of mechanical science more than the preparation, and subsequent spinning and weaving, of cotton. The material, beautiful as it is, as provided by nature, is not in a state which admits of any extensive practical use. Everything, after the cotton fibre has been gathered, depends upon the operations of the mind. Hence it is that we have to record so many machines of the most complicated, and at the same time the most ingenious character which are necessary in every stage of cotton manufacture. In describing the process of ginning, three forms of machine only have been named, and these have been selected because they are the best of the numerous class of gins which have been from time to time introduced. The same must be said with respect to the cotton-openers and the weighing machines. To give a full account of all the machines which have been introduced for these processes, which are merely preparatory, would occupy a large volume, therefore the typical machines only are described, and in every case the best type has been selected. It must be remembered that the cotton spinner is not likely to refer to this Dictionary to learn his trade. The purpose of the book is to convey to all, such descriptions of the Arts and Manufactures, as will give correct views of principles involved. If this purpose is fulfilled it will be felt by the Editor that he has achieved the end desired.

Fig. 583 exhibits a longitudinal section of another kind of blowing engine. The machine is about 18 or 19 feet long, and three feet across within the case. The whole frame is made of cast-iron, forming a close box, which has merely openings for introducing the raw cotton wool, for taking out the cleansed wool, and removing the dust as it collects at the bottom. These doors are shut during the operation of the machine, but may be opened at pleasure, to allow the interior to be inspected and repaired.

The introduction of the cotton is effected by means of an endless cloth or double apron, which moves in the direction of the arrow *a a*, at the left end of the figure,

Digitized by Google

by passing round the continually revolving rollers at *b* and *c*. The two rollers at *e*, being the ones which immediately introduce the cotton into the jaws, as it were, of the machine, are called the feed rollers. The batting arm, or revolving diameter, *f e*, turns in the direction of the arrow, and strikes the flocks violently as they enter so as to throw down any heavy particles upon the iron grating or grid at *n*, while the light cotton filaments are wafted onwards with the wind, from the rotation of the scutcher in the direction of arrow *a'*, along the second travelling apron, upon which the squirrel cage cylinder presses, and applies the cotton in the form of a lap. Above the cylindric cage *h*, which turns in the direction of its arrow, there is a pipe *k*, the continuation of the case *i*. This pipe, though broken off in the figure, communicates by a branch pipe with an air-sucking fan ventilator, not seen in this figure, but like the ordinary fans. The cage *h*, by its rotation, presses down, as we have said, the half-cleaned cotton upon the cloth *a'*, which carries it forward to the second scutcher *f'*, by the second set of feed rollers *e'*. The second scutcher throws down the heavy dust upon the second grid *n'*, through which it falls upon the bottom of the case. The first scutcher makes about 1350 strokes of each of its two arms in a minute; the second, 10,420. The feed rollers for each are fluted. The feed cloth is either sustained by a board, or is made of parallel spars of wood, to secure it against bagging, which would render the delivery of the cotton irregular. The feed rollers make 8 turns in a minute, and as their diameter is 1¼ inch, they will introduce 8 times their circumference, or 37·7 inches of the cotton spread upon the apron in that time. Upon every 12th part of an inch of the cotton, therefore, nearly 3 blows of the scutcher arm will be applied. The second feed rollers move relatively with more slowness, so that for every 2·4 blows of the scutcher, only one twelfth of an inch of cotton wool is presented.

583

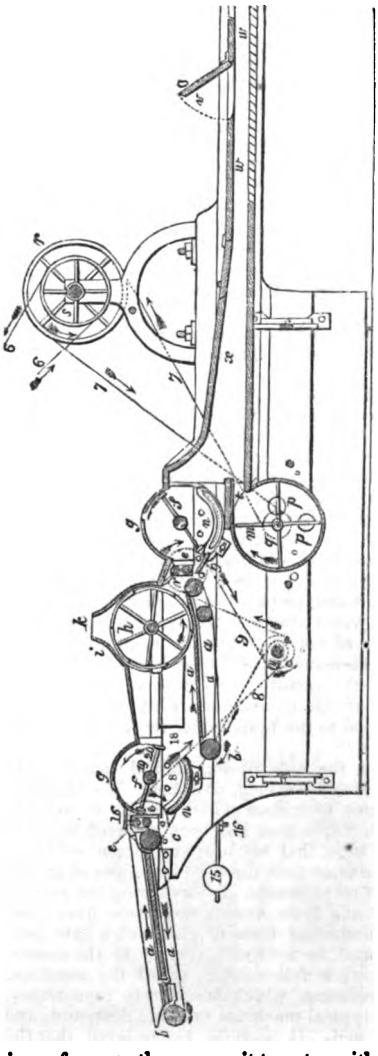

The fan is enclosed in a cylindrical case. The wings of vanes revolve from 120 to 150 times in the minute; and while they throw the air out with nearly this velocity at their excentric outlet in the circumference, they cause it to enter with equal velocity, at the centre. With this centre the squirrel cage is connected by a pipe, as above stated. The sound filaments of the cotton are arrested by the sieve surface of the cylindric cage, and nothing but the broken fragments and the light dust can pass through.

The cotton wool in the blowing machine is wafted by the second scutcher into the space *x w w*, provided with a fine grid bottom; or it is sometimes wound up there by rollers into a lap.

In *fig.* 583 an additional ventilator is introduced beneath at *m o o*, to aid the action of the scutchers in blowing the cotton onwards into the oblong trough *a*. The outlet of that fan is at *t*; and it draws in the air at its axis *q*. *u* and *v*, are two doors or lids for removing the cleaned cotton wool. This last fan is suppressed in many blowing machines, as the scutching arms supply a sufficient stream of air. The dotted lines show how the motion is transmitted from the first mover at *s*, to the

Digitized by Google

various parts of the machine. 6′ 6′ represent the bands leading to the main shafting of the mill. A machine of this kind can clean fully 1500 pounds of short-stapled cotton wool in a day, with the superintendence of one operative, usually a young woman, to distribute the cotton upon the first feed cloth.

The second blowing machine is usually called a *lap* machine, because, after blowing and scutching the cotton, as above described, it eventually coils the fleece upon a wooden roller at the delivering end of the apparatus. It is sometimes also called a *spreading machine*. A section of it is shown in *fig.* 584. The breadth of this machine is about 3 feet, as the lap formed is prepared for the usual breadth of the breaker cards, namely 3 feet. Where the cards are only 18 inches broad, the lap machine is also made of the same breadth. In the figure we see the feed-cloth, the scutching beater, the squirrel suction and spreading cage, and the rollers for coiling up the lap. The lever shown below is for removing the pressure weight from the axis of the lap rollers, when a full one is to be removed, and replaced by an empty one. *m*, at the top, is the commencement of the pipe which leads to the suction fan, or ventilator. The thickness of the lap in this machine must be nicely regulated, as it determines, in a great measure, the grist of the card ends, and even the rovings. In 60 hours such a lap machine will prepare 9000 lbs. of cotton.

584

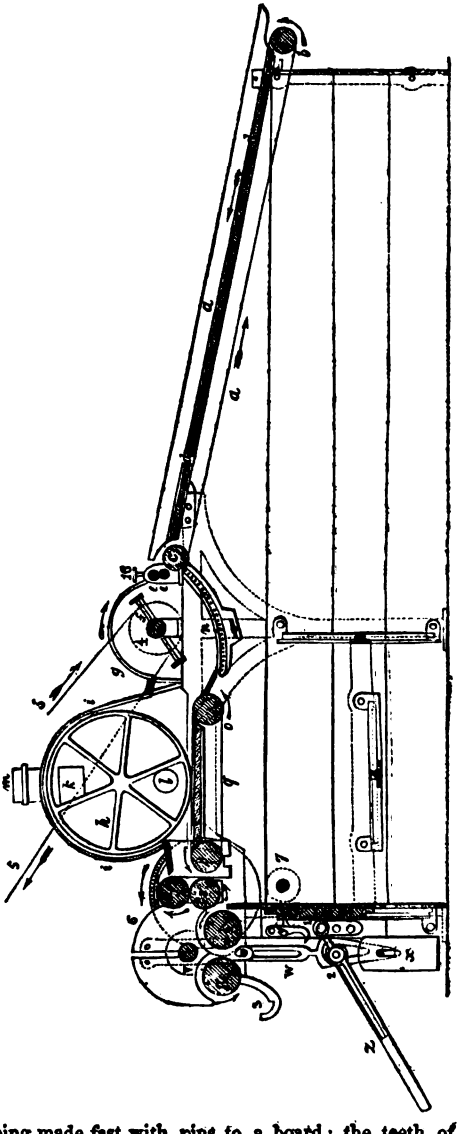

Fig. 585 is the first scutching machine, now never seen except in the oldest factories. A B is the feed cloth; G H and M N are the two scutcher frames.

Carding is the next operation in a cotton factory. Cards are destined to disentangle the individual filaments from each other, and to lay them lengthwise, instead of being doubled up and convoluted, as they usually are in leaving the blowing and lap machines. Carding consists in the mutual action of two opposite surfaces, which are studded thick with oblique angled hooks. The wires of which these hooks are made must be very hard drawn in order to render them stiff and elastic. The middle part of the figures shows one of the staples or double teeth, the structure of which has been partly explained under CARD. Suppose *a*, *fig.* 586, to be a piece of a card fillet, and *b* to be another piece, each being made fast with pins to a board; the teeth of these two cards are set in opposite directions, but are very near together, and parallel. Now suppose a flock or tuft of cotton placed between two such bristling surfaces. Let *a* be moved in the direction of its arrow, and let *b* be moved in the opposite direction, or even let it remain at rest. Every filament of the cotton will be laid hold of by each

Digitized by Google

set of teeth, when their surfaces are thus drawn over each other; the teeth of *a* will pull them in a forward direction, while those of *b* will tend to retain them, or to pull

585

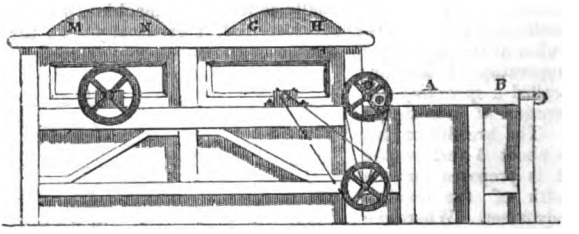

them backwards. The loops or doublings will, by both movements, be opened or drawn out, so that the flocks will be converted into rows of parallel filaments, lying

586

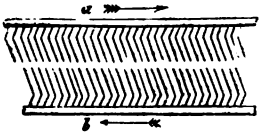

587

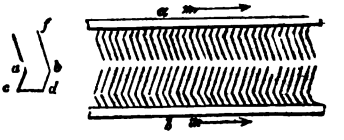

alongside or before each other. Each tooth will secure to itself one or more of them, and by the friction of its sides as well as the hooks of its points, will draw them to their utmost elongation. Though one stroke of the opposite cards be inadequate to produce this equable arrangement, yet many repeated strokes must infallibly accomplish the end in view, of laying the fibres parallel.

Let us suppose this end effected, and that all the fibres have been transferred to the card *a*, a transverse stroke of *b* will draw over to it a certain number of them, and indeed at each stroke there will be a new partition between the two cards, with increased parallelism, but still each card will retain a great deal of the cotton. To make one card strip another, the teeth of one of them must be placed in a reverse position, as shown in *fig.* 587.

If *a* be now drawn in the direction of its arrow along the face of *b*, it will inevitably comb out all, or almost all, the filaments from it, since the hooks of *b* have, in this position, no power of retaining them. Even the doubled fibres or loops will slip over the sloping point of *b*, in obedience to the traction of *a*. By considering these two relative positions of the cards, which take place in hand cards simply by reversing one of them, any person will be able to understand the play of a cylinder card against its flat top, or against another cylinder card, the respective teeth being in what we may call the teasing position of *fig.* 586; and also the play of a cylinder card against the doffer cylinder, in what may be called the stripping position of *fig.* 587.

Cylinder cards, so essential to the continuity and despatch of cotton factory labour, were the ingenious invention of Lewis Paul of Northampton, but were greatly improved and brought into nearly their present operative state by Sir Richard Arkwright. A carding engine consists of one or more cylinders, covered with card-leather (sometimes card-cloth), and a set of plain surfaces similarly covered, made to work against each other, but so that their points do not come into absolute contact. Some cards consist entirely of cylinders, the central main cylinder being surrounded by a series of smaller ones called urchins or squirrels. These are used solely for preparing the coarser stapled cotton, and sheep's wool for the wool spinner.

Fig. 588 represents a card of excellent construction, which may be called a *breaker* and *finisher*, as it is capable of working up the fleece roll of the lapping machine directly into a card-end or riband fit for the drawing machine. In fine spinning mills there are always, however, two cards; one coarser, called a breaker, which turns off the cotton in a broad fleece of extreme thinness, which constitutes the material presented to the finisher card, which has teeth of a finer construction.

a is one of the two upright slots, which are fixed at each side of the engine for receiving the iron gudgeons of the wooden rollers round which the fleece of the lapping machine is rolled. The circumference of this coil rests upon a roller *b*, which is made to turn slowly in such a direction as to aid the unfolding of the lap by the fluted cylinders *e*. The lap proceeds along the table seen beneath the letter *c*, in its progress

Digitized by Google

to the fluted rollers, which are 1⅛ inches in diameter, and have 28 flutings in their circumference. *g* is a weight which hangs upon the axis of the upper roller, and causes

588

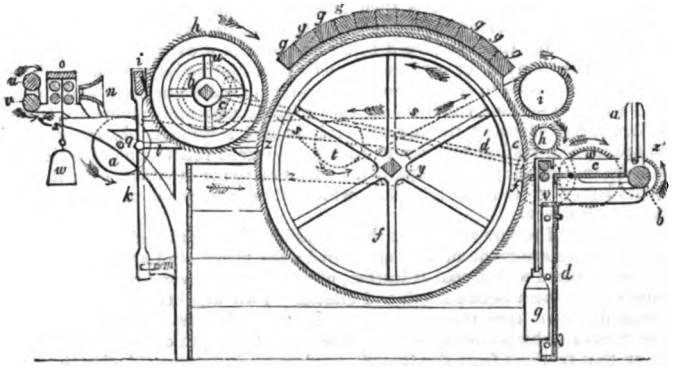

it to press upon the under one: *f* is the main card cylinder; *ggg*, the arch formed by the flat top cards; *h*, the small card cylinder for stripping off the cotton, and therefore called the doffer, as we have said; *i*, the doffer-knife or comb for stripping the fleecy web from the doffer; *klqm*, the lever mechanism for moving these parts. At *d* there is a door for permitting the tenter to have access to the interior of the engine, and to remove whatever dirt, &c. may happen to fall into it. In *fig.* 589 we see the manner of

589

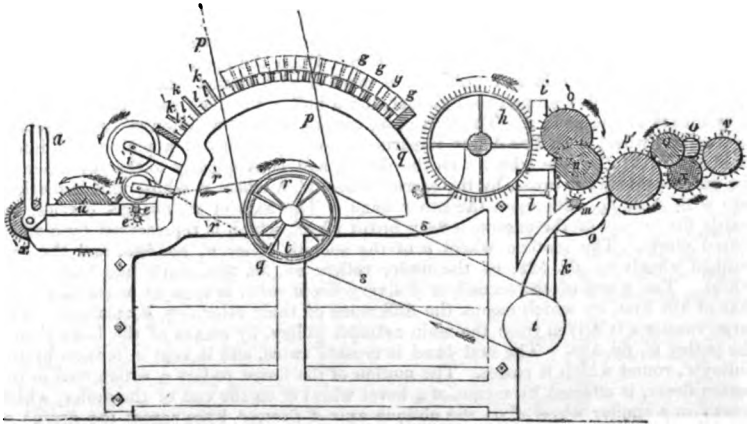

fixing the flat tops *g g* over the cylinder; and for making the matter clearer, three of the tops are removed. Upon the arched cast-iron side of the frame, a row of strong iron pins *k* are made fast in the middle line; and each top piece has, at each of its ends, a hole, which fits down upon two such opposite pins. *ll* are screws whose heads serve as supports to the tops, by coming into contact with the bottom of the holes, which are not of course bored through the wood of the tops. By turning the heads of these screws a little the one way or the other, the pins may be lengthened or shortened in any degree, so as to set the tops very truly in adjustment with the cylinder teeth revolving beneath them. *h'* is the small runner or urchin, and *i'* the large runner; both of which are spirally covered from end to end with narrow card fillets, in the same manner as the doffer. The main cylinder is on the contrary covered with card cloth, in strips laid on parallel to its axis, with interjacent parallel smooth leather borders. The teeth of these several cards are set as represented in the figure, and their cylinders revolve as the arrows indicate. The runners as well as the doffer cylinder may be set nearer to or further from the cylinder *f*; but the screws

Digitized by Google

intended for this adjustment are omitted in the drawings, to avoid confusion of the lines.

The card-end or fleece taken off the doffer *h* by the crank and comb mechanism *i k m* passes through the tin plate or brass funnel *n*, *fig.* 588, whereby it is hemmed in and contracted into a riband, which is then passed through between a pair of drawing rollers *o*. It is next received by the rollers *u v*, which carry it off with equal velocity, and let it fall into the tin cans placed below, or conduct it over a friction pulley, to be wound along with many other card-ends upon a lap roller or large bobbin. The latter mechanism is not shown in this figure. A sloping curved tin or brass plate, channeled or ridged along its surface, conducts the card ribands separately; there are two smooth iron rollers for condensing the several ribands, and a wooden pin round which the ribands are lapped, resting between two leather-covered rollers, one of which receives motion from mill gearing, and imparts it by friction to the lap roller over it. The iron ends of the lap roller lie in upright slots, which allow them freedom to rise as the roller gets filled with fleece.

The two pairs of rollers at *o*, effect the extension of the card-end, and reduce its size. The under rollers are made of iron and fluted; the upper ones are also made of iron, but they are covered with a coat of leather, nicely glued on over a coat of flannel, which two coats render them both smooth and elastic. Two weights, *w*, press the upper cylinder steadily down upon the under ones. Between the first and second pair there is a certain interval, which should be proportioned to the length of the cotton staple. The second, or that furthest from the funnel, revolves with greater velocity than the first, and therefore turns out a greater length of riband than it receives from its fellow; the consequence is a corresponding extension of the riband in the interval between the two pairs of rollers.

The motions of the several parts of the engine are effected in the following way. The band, *p p*, *fig.* 589, which comes down from the pulley upon the main shaft near the ceiling of the work-room, drives, by means of the pulley *q*, the cylinder *f*, *fig.* 588, with a velocity of from 120 to 140 revolutions in a minute. From another pulley, *r*, on the axis of the cylinder, the axis of *t* is driven by the band *s* working round the pulley *t* on its end. This shaft drives the crank and lever mechanism of the stripper knife *i*. A third pulley of the same size as *r* is fixed just within the frame to the other end of the cylinder, and from it a crossed or close band *r'* goes to a pulley upon the small runner *h'*, to give this its rapid rotation. Upon the opposite end of the engine in *fig.* 588, these wheels and pulleys are marked with dotted lines. Here we may observe, first, a pulley *y* upon the cylinder, and a pulley *a'*, which receives motion from it by means of the band *z*. The axis of *a'*, carries in front a pinion *m'*, which sets in motion the wheel *n'*. The latter imparts motion, by means of a pinion and intermediate wheel *o'*, to the wheel *h* on the doffer, and consequently to that cylinder on the one hand; and it turns, by the carrier wheel *p'*, a wheel *x*, whose axis is marked also with *x* in *fig.* 589, upon the other hand. The axis of *x'*, *fig.* 588, carries, towards the middle of the engine, a very broad wheel, which is represented by a small dotted circle. The toothed wheel *v* of the smooth roller *v'*, *fig.* 588, and the two toothed wheels *o o*, *fig.* 589, of the under rollers *o o*, *fig.* 588, work into that broad wheel. The wheel of the second or delivery fluted roller is seen to be smaller than that of the first, by which means the difference of their velocities is obtained. The large runner *i* is driven from the main cylinder pulley, by means of the band *s'*, and the pulley *u'*, *fig.* 588. The said band is crossed twice, and is kept in tension by the pulley *t'*, round which it passes. The motion of the fluted rollers *e*, which feed in the cotton fleece, is effected by means of a bevel wheel *b'* on the end of the doffer, which works in a similar wheel *c'* on the oblique axis *d'* (dotted lines across the drum) of the pinion *e'* upon the lower end of the same axis which turns the wheel *f'*, upon the under feed roller.

Each of the feed rollers, *fig.* 589, bears a pinion *e e* at one end, so that the upper roller turns round with the under one. The roller *b*, *fig.* 588, is set in motion by means of its wheel *x'*; which is driven by a wheel *v'* on the other end of the under feed roller, through the intervention of the large carrier wheel *w'*. The original or first motion of *b* must be as quick as that of the fluted feed rollers *e*, in order that the former may uncoil as much lap as the latter can pass on.

The annexed table exhibits the proper velocities of the different cylinders and rollers of the carding engine, which, however, are not invariable, but may be modified according to circumstances, by changing the pinions *e'*, *fig.* 588, and *w'*, according to the quality or length of the cotton staple. The velocities stated in the table will be obtained when the pulley *a'*, *fig.* 588, is made greater than *y* in the proportion of 3 to 2, and the wheels and pinions have the following number of teeth: *m'*, 18; *n'*, 50; its pinion, 18; *h*, 128; *x*, 24; the broad wheel upon the shaft of *x*, 37 teeth; the wheel *o* of the first fluted roller, 35; and that of the second, 21; *v*, 44; *b'* and *e'*, 54; *e'*, 10; *f'*, 63.

Digitized by Google

Names of the parts.	Diameter in inches.	Circumference in inches.	Revolutions in one minute.	Velocity.
Main cylinder *f* - -	35	109·9	130·	142·87
Doffer *h* - - -	14	43·96	4·38	192·5
Runner or urchin *i'* -	6·25	19·62	5·	98·1
Ditto *h'* - - -	3·5	11·	470·	5170·
Fluted feed roller *e* -	1·167	3·664	0·696	2·55
First drawing roller *o* -	1·	3·14	68·71	215·75
Second ditto - -	1·167	3·664	114·52	419·6
Smooth delivery roller *v*	2·5	7·85	54·66	429·08

The operation of the runners, *h'* and *i'*, becomes very plain on comparing their speed with one another and with that of the main cylinder, and taking into account the direction of the card teeth. The cotton wool, taken off from the feed-rollers by the cylinder, is caught by the opposite teeth of the large runner *i'*, which, on account of its slower surface rotation (98 inches per minute) may be considered to be at rest with reference to the cylinder, and therefore, by holding the cotton in its teeth, will commence its carding. The small runner *h'*, in consequence of its greater surface velocity (5170 inches per minute) will comb the cotton-wool back out of the teeth of the large runner, but it will give it up in its turn to the swifter teeth of the cylinder, which, in carrying it forwards, encounters the teeth of the top cards, and delivers up the filaments to their keeping for some time. We thus see how essential the runners are to the perfection as well as to the acceleration of the carding process for ordinary cotton wool, though for the slenderer and longer filaments of the sea-island kind they are not so well adapted. In cleaning the carding-engines the little runner must be looked to every time that the drum is examined. The large runner and the doffer require to be cleaned together. The quantity of cotton spread upon the feed-cloth, the velocity of it, and of the drawing-rollers, must all be carefully adjusted to the grist of the yarn intended to be spun.

Suppose the sizes and velocities to be as represented in the preceding table, that the engine is a double card 36 inches broad, and that it is furnished with a lap from the lap-machine of which 30 feet in length weigh 5 lbs.; in one minute the surface of the feed-rollers, *e*, passes 2·55 inches of that lap onwards; in the same time the main cylinder *f* will work it off. To card the whole 30 feet, therefore, 141 minutes, or 2 hours and 21 minutes will be required. In this time the circumference of the rollers, *u v*, moves through a space of 141 × 429·08 in. = 5042 ft., and delivers a card-end of that length, weighing 5 lbs. *minus* 6 per cent. for waste, that is 4 lbs. 11½ oz. One pound will form a riband 1072 feet long, being, according to the English mode of counting, about number ¼ or 0·357. The extension of the cotton-fleece to this degree proceeds as follows: — In the 141 minutes which the feed-rollers take to introduce the 30 feet of lap, the doffer *h* makes 617·58 revolutions, and the comb, or doffer knife *i*, detaches from the doffer teeth a thin fleecy web of 2262 feet in length. The first drawing pair of fluted rollers, by its quick motion, with the aid of the funnel *m*, converts this fleece into a riband 2535 feet long. The second pair of the fluted rollers extends this riband to 4390 feet, since their surface velocity is greater than the first pair in that proportion. The slight elongation (of only 112 feet, or about $\frac{1}{41}$) which takes place between the delivery fluted rollers and the smooth cylinders, *u v*, serves merely to keep the card-end steadily upon the stretch without folding. *Fig.* 590 is a plan of the card and the fleece, where *h* is the cylinder, *n* is the funnel, *u* the pressing rollers, and *h'* the card-ends in the can.

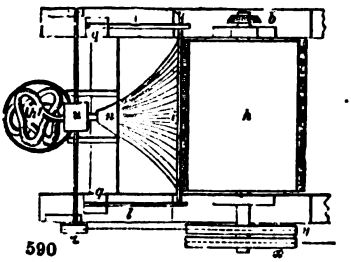

590

Figs. 591, 592 represent skeletons of the old cards to facilitate the comprehension of these complex machines. *Fig.* 591 is a plan; F is the main cylinder; MM is the doffer knife or comb; G, the carded fleece hemmed in by the funnel *a*, pressed between the rollers *b*, and then falling in narrow fillets into its can. *Fig.* 592, KL are the feed rollers; AB, the main cylinder; CD, the tops; EF, the doffer card; MN, the doffer knife; *d*, *b*, *c*, the card-end passing between compressing rollers into the can *a*.

Fig. 593 is a carding-engine without top flats, being entirely covered with rollers and clearers; it is suitable for all counts under forties and will card for 600 lbs. of twenties per week of 60 hours.

Digitized by Google

It is made by Hetherington and Sons, Manchester, entirely of iron, and may be looked upon as a very complete engine.

591

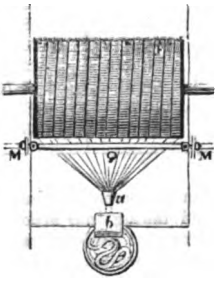

592

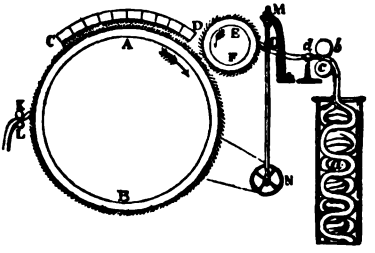

593

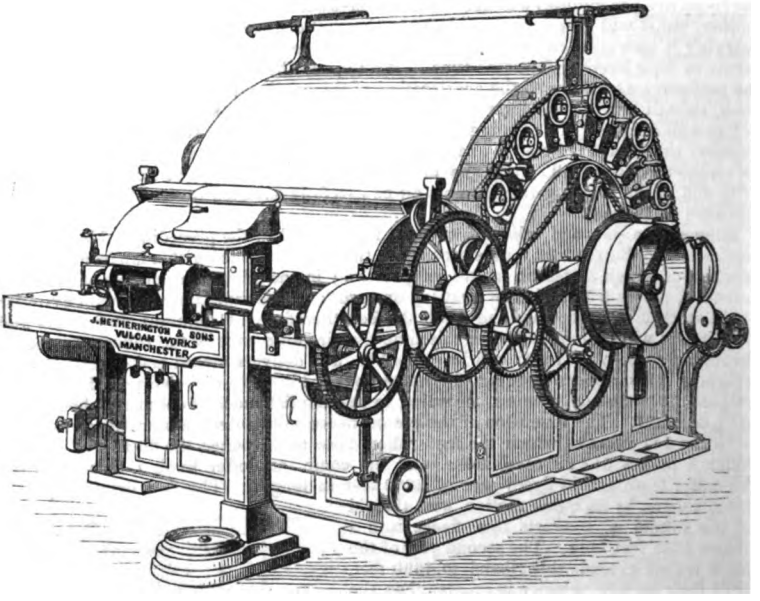

The same fig. (593) will serve to illustrate the most modern form of carding engine, if the reader will suppose two additional rollers placed under the licker-in; all three rollers being of the same size, clothed alike and revolving in the same direction, in close proximity to each other and to the main cylinder.

This engine is known as the Patent Automatic Carding Engine, is made by the patentees, Messrs. W. Higgins & Sons, Salford, and Messrs. Hethrington & Sons. Its action is as follows:—

The cotton is delivered by the feed rollers to the licker-in as usual; but before it reaches the main cylinder it is brought into contact with and is carded by the intermediate roller, which allows only the carded portions of cotton to pass through to the cylinder, the larger masses being taken hold of by the intermediate roller, and carried forward until they are brought into contact with the bottom roller, which still further cards and separates the fibres of cotton, allowing an additional portion to be delivered to the cylinder, the remainder being taken on by the bottom roller and likewise deposited on the cylinder. Thus, instead of the cotton being delivered in flaky masses upon the cylinder by the licker-in, as in the ordinary mode, it is first well opened and carded, separated from dirt and seeds at the most convenient point, and then dis-

Digitized by Google

tributed lightly and evenly over the surface of the main cylinder at three separate points.

In addition to the duties performed by the bottom roller, as just explained, it acts as a stripper to the main cylinder. To attain this object, it revolves at a greater surface speed than that of the main cylinder, by which means it strips the latter of any cotton resting on its surface; this cotton is carried forward by the stripping roller and brought into contact with the intermediate, which re-cards it, mixes it with the cotton coming forward from the licker-in, and delivers a portion of it to the cylinder, the remainder being returned to the cylinder by decreasing the velocity of the stripping roller to a less surface speed than that of the cylinder, which thus becomes a stripper to the roller. It will therefore be observed, that by the alternations of speed given to this roller, which occur about fifteen times per minute, the roller, first over-running the cylinder, strips the cylinder, and then the cylinder, over-running the roller, strips the roller; and so complete is the operation of this mutual stripping action, that the cylinder never requires stripping by hand, nor stopping except for grinding.

It will be observed that by placing these two rollers beneath the licker-in all these advantages are obtained without occupying any portion of the surface of the main cylinder, which has hitherto been appropriated for rollers or flats; and if the licker-in and intermediate rollers are covered with Garnett's patent metallic clothing, which never requires grinding, these results are obtained with very little additional labour or attention.

In illustration of the increased productive power of this engine, the patentees state that in a fine spinning mill the following results have been obtained:—

175 cards, 18 inches wide, which required 18 operatives, have been replaced by 13 patent cards, 36 inches wide, requiring only 4 operatives. The strippings and other waste, which previously amounted to 24 per cent., have been reduced to 4 per cent., the amount taken out by the combing machine remaining as before. The production of the 18-inch cards averaged about 25 lb. per week: the production of the patent cards averages 550 lb. for No. 130's, 430 lb. for No. 160's, and 350 lb. for No. 200's, the quality of the yarn produced by the latter being fully better than what was produced by the former.

This carding engine should be compared with that which was in general use thirty years since, to enable the spinner of this date (1866) to appreciate the greatly increased productive power which the new possess over the old engine. In 1830 the carding engine was small, mainly of wood, and covered by stripping flats (the latter causing the loss of much cotton, and that at a considerable cost in wages); while now the engines are chiefly of iron and larger; a main cylinder, for instance, instead of being 30 inches in diameter by 30 inches wide, with 2,700 square inches of carding surface, has now a diameter of 44 inches by 44 inches, giving a carding surface of 5,808 square inches, or more than as much again. In addition to that, the flats are now dispensed with (excepting for counts above 50's), rollers and clearers being employed instead, to the great saving of cotton, increased quantity, and less cost. As an illustration, take the case of a mill in Manchester, where recently have been taken out 189 engines of the old make, 24 inches on the wire, and replaced with combing machines and 15 engines 40 inches on the wire, which are now carding more cotton per week, of as good quality, and at an immense reduction in the cost of production.

Other improvements in the carding engine have had a share in this increase of production, viz. self-acting strippers, better clothing (especially india-rubber clothing), greater working surface by keeping low as possible the licker-in and doffer, metallic clothing for the former, a doffing knife motion making 2,000 strokes per minute, and the addition of a coiler.

Fig. 594 represents the combing machine, as seen at work in the mills of Thomas Bazley, Esq., M. P., Manchester, and other fine spinning concerns. The introduction of this beautiful machine, manufactured by Messrs. Hethrington and Sons, Manchester, having produced a complete revolution in the preparation of fine yarns, we give a brief history of its invention prior to describing it in detail:—

About the year 1844, Mr. Jean Jacques Bourcart, one of the partners of the eminent firm of Messrs. Nicolas Schlumberger & Co., of Guebwiller, in the department du Haut Rhin, in the kingdom of France, offered a prize of a considerable sum of money to any person who should invent a machine that would supersede the carding engine in the treatment of the fibres of cotton, suitable for fine numbers, such machine to be free from the objections urged against the carding engine of breaking the fibres of the cotton, and delivering them in the staple or hook form; and besides this, it was to possess the peculiar property of separating the long fibres from the short ones; and after laying the long fibres parallel to each other, pass them out of the machine in a perfectly cleaned state in the form of a sliver ready for the drawing frame.

Digitized by Google

In a short time after this announcement Mr. Bourcart was waited upon by Mr. Josaé Heilmann, of Mulhausen, in the department du Haut Rhin in the kingdom of France, machine maker, who informed him that he claimed the prize. Mr. Heilmann feeling satisfied that his invention was a valuable one, made application for a patent in England, which patent was sealed on the 25th of February, 1846.

594

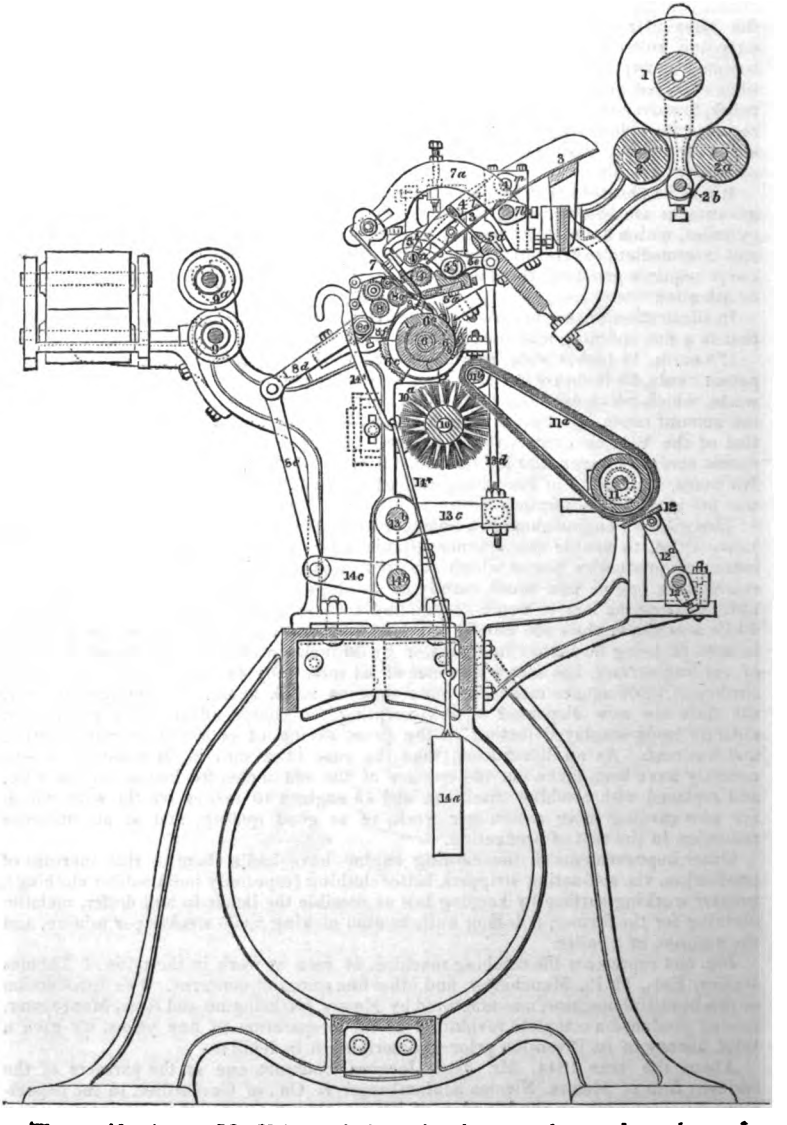

The specification of Mr. Heilmann's invention is very clear and concise, and a single extract from it will be sufficient to convey to the mind of the practical spinner the nature and object of his invention. He says, "My invention consists, secondly, in a new combination of machinery for the purpose of combing cotton, as well as wool and other fibrous materials, into which machine the fibres as they come from the dressing-machine are introduced in a lap sliver or fleece, which is broken asunder, and the

Digitized by Google

fibres are combed at each end, and the long and short fibres are separated, the long ones being united in one sliver, the short ones in another, and they are passed out of the machine thus separated ready for drawing, roving, and other subsequent operations."

Mr. Heilmann did not live long enough to reap the reward of his genius for inventing this and other important machines, and his son, Jean Jacques Heilmann, was under the necessity of bringing an action for the infringement of the combing machine patent against certain parties in Yorkshire; the trial took place before the Lord Chief Justice of the Queen's Bench and a special jury at the Guildhall, London, on the 27th and 28th of February, 1852, which resulted in a verdict for the plaintiff, thereby establishing the validity of the patent. Since that period a considerable number of machines have been set to work in this country; and although several patents have been taken out for certain improvements introduced into these machines, still the combination of a delivering, combing, and drawing apparatus, and their mode of action, is retained, as will be seen in the following description of *Cross Section of Combing Machine, fig.* 594.

1 is the lap of cotton resting upon the two wooden rollers 2, 2*a*. When motion is given to these rollers, they cause the lap to unwind and deliver the sheet of cotton down the inclined conductor 3, and between the fluted steel feeding roller 4, and the leather-covered pressure roller 4*a*; to these rollers an intermittent motion is given by means of a star wheel; they make $\frac{1}{19}$ of a revolution to one revolution of the cylinder 6, this motion being effected during the time the cushion plate 5*a* is forward, and the nipping plate 5 is lifted from it. The cushion plate 5*a* is hung upon the centre 5*b*, and the nipping plate upon the shaft 5*c*, and this shaft receives motion from a cam at the end of the machine through the lever 5*e*, the connecting rod 13*d*, lever 13*c*, and shaft 13*b*,—the parts being so arranged that the cushion plate 5*a* is pressed backward by the nipping plate 5, but as soon as the pressure is removed it is drawn forward by a spring until it arrives at the strap. Besides this movement, the nipping plate is caused to move on its own axis, which enables it to quit contact with the cushion, while the cotton is being fed in between them.

In the engraving (*fig.* 594) the cushion 5*a* is represented as thrown back by the nipping plate 5, and while in this position the cotton is held between them, until the combs on the cylinder pass between the fibres of cotton which protrude, and remove from them all impurities and the fibres which are too short to be held by the nipper. The combing cylinder 6*a* is attached to the shaft, or axis 6, by which it is caused to revolve. The periphery of this cylinder is divided into four unequal parts by the combs 6*b* on one side, and the fluted segment 6*c* on the other side; the spaces between them being plain to allow time for the nipper and leather detaching roller 8*a* to change their positions.

The combs on the cylinder are made with teeth at various distances, the coarser ones taking the lead, and finer teeth following, the last combs having more than 80 teeth in a lineal inch. All impurity or waste mixed with the fibres held by the nipper is carried away by these combs, which at every revolution are cleaned by the cylindrical brush 10*a*, stripping the waste from them, and depositing it upon the travelling creeper 11*a*, formed of wired cloth, which carries it down until the doffing knife, or steel blade 12 removes it in the usual manner; it then drops into a waste box, and is afterwards worked into coarser yarns. A cylinder covered with wired cloth is sometimes used instead of the travelling creeper, and acts in a similar way.

As soon as the combs have all passed the fibres held by the nipper, the cushion plate 5*a* is drawn forward, and the nipper plate 5 is lifted from it, and thus releases the fleece; the fluted segment 6*c* on the cylinder is at the same time passing immediately under the cushion plate 5*a*, the ends of the combed fibres lying upon it, and as the leather detaching roller 8*a* has been lowered into contact with the fluted segment, they are then drawn forward; but as it is necessary to prevent any fibres passing that have not been properly cleaned or combed, the top comb 7 is placed between the nipper and the roller, and as this comb falls and penetrates the fleece just in front of the part uncombed by the cylindrical combs it prevents any waste from being drawn forward with the tail end of the clean fibres.

The leather detaching roller 8*a*, in addition to its occasional contact with the fluted segment 6*c*, is always in contact with the fluted steel detaching roller 8, and participates in its movements.

These rollers are stationary while the cylinder combs are cleaning the fibres projecting from the nipper, but as soon as that operation is completed, they are put into

Digitized by Google

motion, and make part of a revolution backward, taking back with them the fibres previously combed, but taken out of the way to allow the cylinder combs to pass, in order for the next fibres coming forward to be joined or pieced to them, so as to form a continuous sliver or ribbon. As soon as the backward movement is completed, the leather-detaching roller 8*a* is made to approach the cylinder by the lever 8*f*, which receives motion from a cam at the end of the machine, through the lever 8*d*, connecting rod 8*e*, lever 14*e*, and shaft 14*b*. Before, however, it comes in contact with the fluted segment 6*c*, the movement of the fluted roller is reversed, and it is caused to turn forward, producing a corresponding movement of the detaching roller 8*a*, the speed being so arranged that, before they are allowed to touch each other, the peripheries of the fluted segment 6*c* and the roller 8*a* travel with an equal velocity. At this stage, the ends of the fibres cleaned by the cylinder combs and projecting from the nipper, are resting upon the fluted segment; and the roller 8*a*, in coming in contact with it, presses upon those fibres, and immediately draws them forward; the front ends are then lifted by the leather roller and placed on the top of those fibres previously cleaned, and brought back to receive them. The pressure of the rollers 8 and 8*a* completes the piecing of the fibres; the motion of the rollers being continued until the tail end of the fibres is drawn through the top comb, and a length of fibres is delivered to the callender rollers,—sufficient slack being left between to allow for the next backward movement. The roller 8*a* is then raised from the fluted segment and ceases to revolve.

From the callender rollers, the combed cotton passes along the front plate or conductor, where it joins the slivers from the other five heads of the machine, and with them passes through the drawing head, and is then deposited in a can ready to be removed to the drawing frame.

The movements above described being necessary for each beat of the combing machine, they must all recur each second of time, or sixty times each minute.

Recapitulation.—The combing machine is fed or supplied from 6 laps of cotton (each lap being formed from about 18 slivers from the breaker carding engines, and doubled into a lap in the lap machine). Each lap is 8 inches wide and about 12 inches diameter when full.

The following description of the manner in which the combing machine works is confined to one head supplied by 1 lap, as each of the 6 heads shown in *fig.* 594 is exactly like the others.

The lap of cotton having been placed on a pair of revolving lap rollers, the fleece, or sheet of cotton, is conducted down an inclined guide to a fluted steel feeding roller, which places the cotton between the open jaws of an iron nipper. The nipper is then closed and made to approach the comb cylinder, by means of a cam, where it holds the fibres in such a position that the combs of the revolving cylinder pass between and remove from the fibres all impurities and short or broken cotton, which are afterwards worked up into yarns of a coarser quality.

As soon as the combs have all passed through the cotton, the nipper recedes from the cylinder, and as soon as it has reached the proper distance, opens its jaws, and allows the partially combed fibres to be drawn out of the fleece, by means of a leather-covered roller, which works for this purpose in contact with the fluted segment on the comb cylinder, and with the fluted steel detaching roller. The drawing out of these fibres causes the ends of those fibres which were before held in the nipper to pass between the teeth of a fine top comb, thus completing the combing of each separate fibre. Previous to the movement for drawing out the fibres from the uncombed fleece, the detaching roller has made a partial revolution backwards, and taken with it the combed cotton previously delivered, in order to piece to it the fibres just combed.

The machine is so arranged that the forward movement of the detaching roller overlaps the ends, and brings out the cotton in a continuous sliver to the front of the machine, where it joins the other five slivers which have been simultaneously produced on the other heads of the machine. The united slivers then pass through the drawing head to the next operation — the drawing frame.

The drawing and doubling are the next process. The ends, as they come from the cards, are exceedingly tender and loose, but the filaments of the cotton are not as yet laid so parallel with each other as they need to be for machine spinning. Before any degree of torsion therefore be communicated, a previous process is required to give the filaments a level arrangement in the ribands. The drawing out and doubling accomplish this purpose, and in a manner equally simple and certain. The means employed are drawing-rollers, whose construction must here be fully explained, as it is employed in all the following machines; one example of their use occurred, indeed, in treating of the cards.

Digitized by Google

595

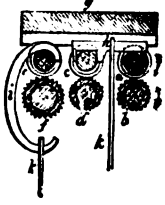

Let *a* and *b*, *fig.* 595, represent the section of two rollers lying over each other, which touch with a regulated pressure, and turn in contact upon their axes in the direction shown by the arrows. These rollers will lay hold of the fleecy riband presented to them at *a*, draw it through between them, and deliver it quite unchanged. The length of the piece passed through in a given time will be equal to the space which a point upon the circumference of the roller would have percursed in the same time; that is, equal to the periphery of one of the rollers multiplied by the number of its entire revolutions. The same thing holds with regard to the transmission of the riband through between a second pair of rollers, *c*, *d*, and a third, *e*, *f*. Thus the said riband issues from the third pair exactly the same as it entered at *a*, provided the surface speed of all the rollers be the same. But if the surface speed of *c* and *d* be greater than that of *a* and *b*, then the first-named pair will deliver a greater length of riband than the last receives and transmits to it. The consequence can be nothing else in these circumstances than a regulated drawing or elongation of the riband in the interval betwixt *a*, *b*, and *c*, *d*, and a condensation of the filaments as they glide over each other, to assume a straight parallel direction. In like manner the drawing may be repeated by giving the rollers *e*, *f* a greater surface speed than that of the rollers *c* and *d*. This increase of velocity may be produced, either by enlarging the diameter, or by increasing the number of turns in the same time, or finally by both methods conjoined. In general the drawing-machine is so adjusted, that the chief elongation takes place between the second and third pair of rollers, while that between the first and second is but slight and preparatory. It is obvious, besides, that the speed of the middle pair of rollers can have no influence upon the amount of the extension, provided the speed of the first and third pair remains unchanged. The rollers, *a*, *b*, and *c*, *d*, maintain towards each other continually the same position, but they may be removed with their frame-work, more or less, from the third pair, *e*, *f*, according as the length of the cotton staple may require. The distance of the middle point from *b* and *d*, or its line of contact with the upper roller, is, once for all, so calculated, that it shall exceed the length of the cotton filaments, and thereby that these filaments are never in danger of being torn asunder by the second pulling them while the first holds them fast. Between *d* and *f*, where the greatest extension takes place, the distance must be as small as it can be without risk of tearing them in that way; for thus will the uniformity of the drawing be promoted. If the distance between *d* and *f*, be very great, a riband passing through will become thinner, or perhaps break in the middle; whence we see that the drawing is more equable, the shorter is the portion submitted to extension at a time, and the nearer the rollers are to each other, supposing them always distant enough not to tear the staple.

The under rollers *b*, *d*, *f* are made of iron, and, to enable them to lay firmer hold of the filaments, their surfaces are fluted with triangular channels parallel to their axes. The upper rollers, *a*, *c*, *e*, are also made of iron, but they are smooth, and covered with a double coating, which gives them a certain degree of softness and elasticity. A coat of flannel is first applied by sewing or gluing the ends, and then a coat of leather in the same way. The junction edges of the leather are cut slanting, so that when joined by the glue (made of isinglass dissolved in ale) the surface of the roller may be smoothly cylindrical. The top rollers are sometimes called the *pressers*, because they press by means of weights upon the under ones. These weights are suspended to the slight rods *k' k*; of which the former operates on the roller *e* alone, the latter on the two rollers *a* and *c* together. For this purpose the former is hung to a c shaped curve, *i*, whose upper hook embraces the roller *e*; the latter to a brass saddle, *h*, which rests upon *a* and *c*. A bar of hard wood, *g*, whose under surface is covered with flannel, rests, with merely its own weight, upon the top rollers, and strips off all the loose hanging filaments. Similar bars with the same view are made to bear up under the fluted rollers *b*, *d*, *f*, and press against them by a weight acting through a cord passing over a pulley. Instead of the upper dust-covers, light wooden rollers covered with flannel are occasionally applied.

Were the drawing of a riband continued till all its fibres acquired the desired degree of parallelism, it would be apt, from excessive attenuation, to tear across, and thereby to defeat the purpose of the spinner. The dilemma is got rid of in a very simple way, namely, by laying several ribands together at every repetition of the process, and incorporating them by the pressure of the rollers. The practice is called *doubling*. It is an exact imitation of what takes place when we draw a tuft of cotton wool between our fingers and thumb in order to ascertain the length of the staple, and replace the drawn filaments over each other, and thus draw them forth again and again, till they are all parallel and of nearly equal length. The doubling has another advantage,

Digitized by Google

that of causing the inequalities of thickness in the ribands to disappear, by applying their thicker to their thinner portions, and thereby producing uniformity of substance.

The drawing frame, as shown in section in *figs.* 595, 597, and in a back view in *fig.* 596, will require, after the above details, little further explanation. *ll* are the weights

596

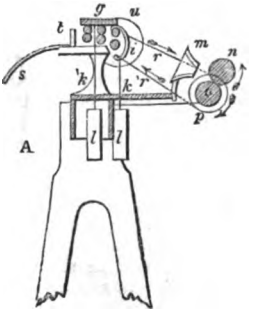

597

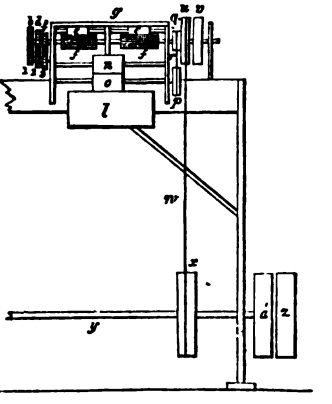

which press down the top rollers upon the under ones, by means of the rods *kk'* and hook *i*. Each fluted roller is, as shown at *f*, *fig.* 597, provided in the middle of its length with a thinner smooth part called the *neck*, whereby it is really divided into two fluted portions, represented by *e e* in the figure. Upon this middle neck in the pressure rollers, the hook *i*, and the saddle *h* immediately bear, as shown in the former *fig.* 595. The card-ends, to the number probably of six, are introduced to the drawing frame either from tin cans, placed at *ee*, *fig.* 597, and A, *fig.* 596, or from lap-bobbins; and, after passing through it, the ribands or slivers are received either into similar tin cans as *g*, or upon other lap-bobbins upon the other side. These appendages may be readily conceived, and are therefore not exhibited in all the drawings. Three of the slivers being laid together, are again introduced to the one fluted portion *a b*, *fig.* 595, and three other slivers to the other portion. The sloping curved tin or brass plate *s*, *fig.* 596, with its guide pins *t*, serves to conduct the slivers to the rollers. When the two threefold slivers have passed through between the three pairs of rollers, and been hereby properly drawn, they run towards each other in an oblique direction, behind the last roller pair *e f*, *fig.* 595, and unite, on issuing through the conical funnel *w*, *fig.* 596, into a single riband or spongy sliver; which is immediately carried off with equable velocity by two smooth cast-iron rollers, *n o*, *figs.* 596 and 597, and either dropped into a can, or wound upon a large bobbin. The surface speed of these rollers is made a trifle greater than that of the delivery drawing rollers, in order to keep the portion of sliver between them always in an extended state. Four fluted drawing portions are usually mounted in one drawing frame, which are set a-going or at rest together. To save all unnecessary carrying of the cans from the back to the front of the frame, the drawing heads are so placed, that the first and third discharge their slivers at the one side, and the second and fourth at the other. By this arrangement, the cans filled behind one head, are directly pushed aside in front of the next drawing head; by which alternate distribution the work goes on without interruption.

The *fast* pulley *u*, *fig.* 597, by which the whole machine is driven, derives its motion from the main shaft of the mill by means of the band *w*. The similar pulley *z*, which sits loose upon the axis, and turns independently of it, is called the loose pulley; both together being technically styled *riggers*. When the operative desires to stop the machine, he transfers the band from the fast to the loose pulley by means of a lever bearing a fork at its end, which embraces the band. Upon *y*, four pulleys such as *x* are fixed, each of which sets in motion a drawing head, by means of a band like *w* going round the pulleys *x* and *u*. On account of the inverted position of the heads, which requires the motion of *u* to be inverted, the bands of the first and third heads are open, but those of the second and fourth are crossed. Every head is provided with a loose pulley *v*, as well as the fast pulley *u*, in order to make the one stop or move without affecting the others. The shaft of the pulley *u* is the prolonged shaft of the backmost fluted roller *f*. It carries besides a small pulley *q*, which, by means of the band *r*, and the pulley *p*, *fig.* 596, sets in motion the undermost condensing roller *o*. The upper roller *n*, presses with its whole weight upon it, and therefore turns by friction.

Digitized by Google

The toothed wheel-work, by which the motions are communicated from the backmost fluted roller to the middle and front ones, are seen in *fig.* 597.

The wheel *f*, *fig.* 595, of 20 teeth, works in a 44-toothed carrier-wheel, on whose axis there are two smaller wheels; 2 with 26 teeth, and 1 with 22 teeth. The wheel *d*, *fig.* 597, of the middle roller, and the wheel *b* of the front roller, are set in motion by other carrier wheels; the first has 27 teeth, and the last 40. For every revolution of *b*, the roller *d* makes nearly $1\frac{3}{4}$ turns, and the roller *f*, 4 revolutions. The top rollers revolve as we have stated, simply by the friction of contact with the lower ones. Now suppose the diameter of the rollers *b* and *d* to be 1 inch or 12 lines, that of *f*, $1\frac{1}{4}$ inch, or 15 lines, the surface velocities of the three pairs of rollers in the series will be as 1, $1\frac{3}{4}$, and 5. Every inch of the cotton sliver will be therefore extended between the first and second pairs of rollers into $1\frac{3}{4}$ inches, and between the second and third or delivery pair into 5 inches; and after the sliver has passed through all the four drawing heads, its length will be increased 625 times $= 5 \times 5 \times 5 \times 5$.

The further the drawing process is pushed, the more perfectly will its object be accomplished: namely the parallelism of the filaments. The fineness of the appearance of the sliver after the last draught depends upon the number of doublings conjointly with the original fineness and number of drawings. The degree of extension may be increased or diminished, by changing the wheels in *fig.* 403, for others with a different number of teeth. Thus the grist or fineness of the sliver may be modified in any desired degree; for, when the subsequent processes of the mill remain the same, the finer the drawings the finer will be the yarn. For spinning coarse numbers or low counts for example, six card-ends are usually transmitted through the first drawing head, and converted into one riband. Six such ribands again form one in the second draught; six of these again go together into the third sliver; and this sliver passes five-fold through the last draught. By this combination 1080 of the original card-ends are united in the finished drawn sliver $= 6 \times 6 \times 6 \times 5$. The fineness of the sliver is, however, in consequence of these doublings, not increased but rather diminished. For, by the drawing, the card-end has been made 625 times longer, and so much smaller; by the doubling alone it would have become 1080 times thicker; therefore the original grist is to the present as 1, to the fraction $\frac{625}{1080}$; that is, supposing 1072 feet of the riband delivered by the card to weigh one pound, 625 feet, the sliver of the last drawing, will also weigh a pound, which corresponds in fineness to number 0·24, or nearly $\frac{1}{4}$.

The rearmost or last drawing roller has a circumference of nearly 4 inches, and makes about 150 revolutions per minute; hence each of these drawing heads may turn off 35,000 feet of sliver in 12 hours.

Fig. 598 is a drawing frame, by Hetherington & Sons, similar in principle of action to *fig.* 597 just described, but containing all the latest improvements, *i.e.* greater

598

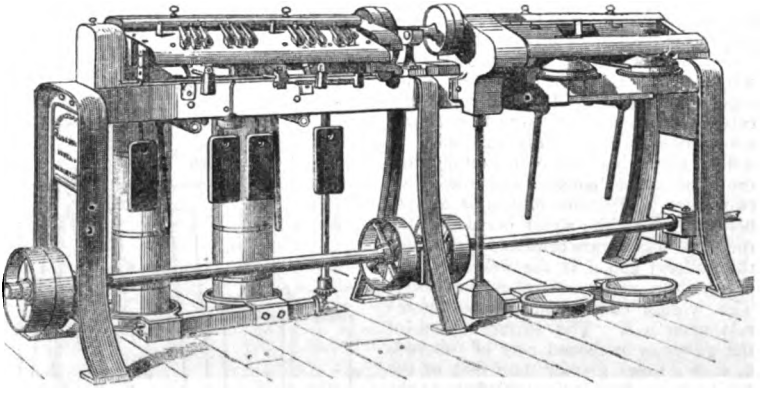

strength of materials; a stop motion to stop the frame, when a sliver breaks; a roller plate to prevent roller laps. The coiler motion, by means of which the sliver is placed in the can in circles overlapping each other on the principle described in *fig.* 599, the can roving frame; 4 rows of draught rollers instead of 3; and lastly, an apparatus for lifting all the roller weights from off the rollers at any time when the frame may be stopped.

The loss which the cotton suffers in the drawing frame is quite inconsiderable. It consists of those filaments which remain upon the drawing rollers, and collect, in a great

Digitized by Google

measure, upon the flannel facing of the top and bottom cleaner bars. It is thrown among the top cleanings of the carding engine. When from some defect in the rollers, or negligence in piecing the running slivers, remarkably irregular portions occur in the ribands, these must be torn off, and returned to the lap machine to be carded anew.

The fifth operation may be called the *first spinning process*, as in it the cotton sliver receives a twist; whether the twist be permanent, as in the bobbin and fly frame, or be undone immediately, as in the tube-roving machine. In fact, the elongated slivers of parallel filaments could bear little further extension without breaking asunder, unless the precaution were taken to condense the filaments by a slight convolution, and at the same time to entwine them together. The twisting should positively go no further than to fulfil the purpose of giving cohesion, otherwise it would place an obstacle in the way of the future attenuation into level thread. The combination of drawing and twisting is what mainly characterises the spinning processes, and with this fifth operation therefore commences the formation of yarn. As however a sudden extension to the wished-for fineness is not practicable, the draught is thrice repeated in machine spinning, and after each draught a new portion of torsion is given to the yarn, till at last it possesses the degree of fineness and twist proportioned to its use.

The slubbing frame (*fig.* 599) is the first machine which puts *twist* into the sliver, and prepares it for the roving frame, which in its principle it precisely resembles.

599

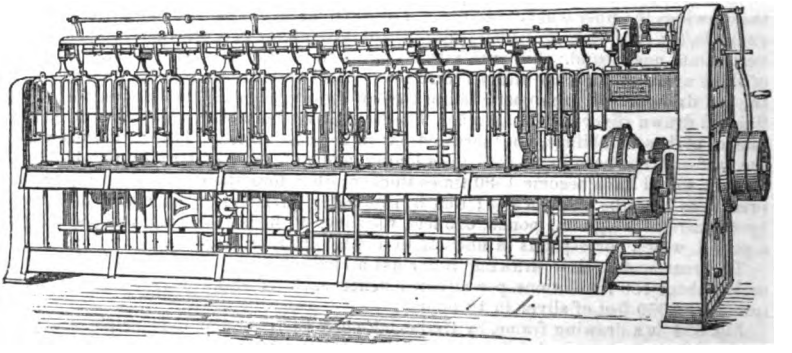

The preliminary spinning process is called *roving*. At first the torsion is slight in proportion to the extension, since the solidity of the still coarse sliver needs that cohesive aid only in a small degree, and looseness of texture must be maintained to facilitate to the utmost the further elongation.

Fig. 600 is a section of the can roving frame, the ingenious invention of Arkwright, which till within these 40 years was the principal machine for communicating the incipent torsion to the spongy cord furnished by the drawing heads. It differs from that frame in nothing but the twisting mechanism; and consists of two pairs of drawing rollers, *a* and *b*, between which the sliver is extended in the usual way; *c* are brushes for cleaning the rollers; and *d* is the weight which presses the upper set upon the lower. The wiping covers (not shown here) rest upon *a b*. The surface speed of the posterior or second pair of rollers is 3, 4, or 5 times greater than that of the front or receiving pair, according to the desired degree of attenuation. Two drawn slivers were generally united into one by this machine, as is shown in the figure, where they are seen coming from the two cans *e e*, to be brought together by the pressure rollers, before they reach the drawing rollers *a b*. The sliver as it escapes from these rollers, is conducted into the revolving conical lantern *g*, through the funnel

600

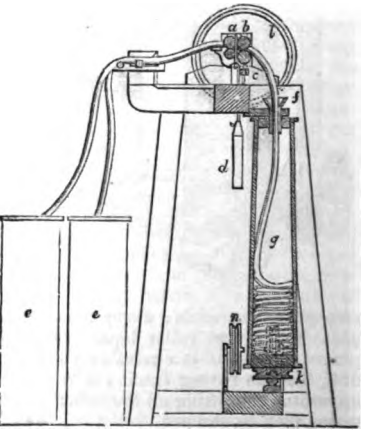

Digitized by Google

f at its top. This lantern-can receives its motion by means of a cord passing over a pulley *k*, placed a little way above the step on which it turns. The motion is steadied by the collet of the funnel *f*, being embraced by a brass busk. Such a machine generally contained four drawing heads, each mounted with two lanterns; in whose side there was a door for taking out the conical coil of roving.

601

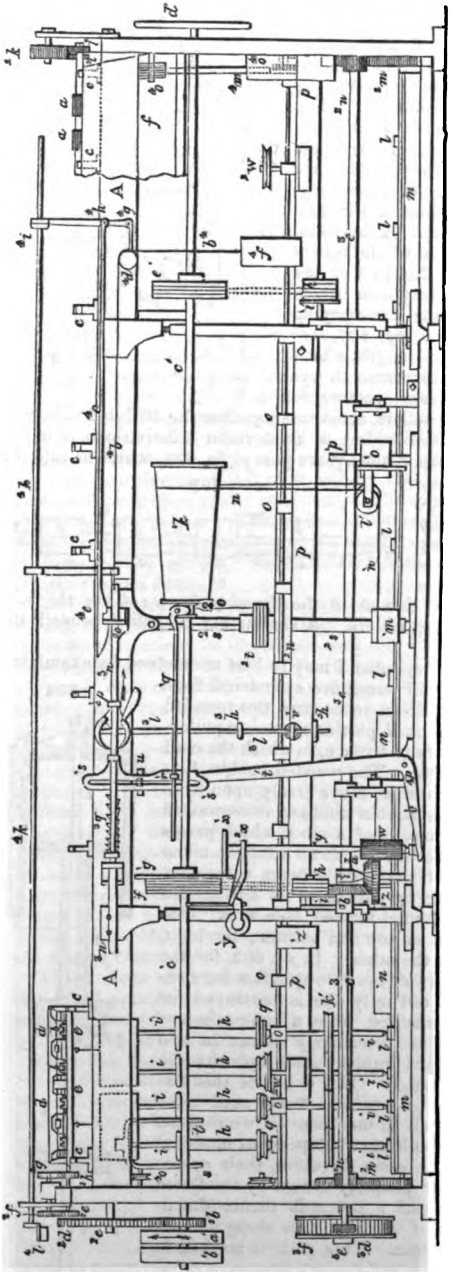

The motion imparted to the back roller by the band pulley or rigger *m*, was conveyed to the front one by toothed wheel-work.

The vertical guide pulley at bottom *n*, served to lead the driving band descending from the top of the frame round the horizontal whorl or pulley upon the under end of the lantern. The operation of this can-frame was pleasing to behold; as the centrifugal force served both to distribute the soft cord in a regular coil, and also to condense a great deal of it most gently within a moderate space. Whenever the lantern was filled, the tender carried the roving to a simple machine, where it was wound upon bobbins by hand. Notwithstanding every care in this transfer, the delicate texture was very apt to be seriously injured, so as to cause corresponding injuries in every subsequent operation, and in the finished yarn. Messrs. Higgins, of Salford, had the singular merit as we have said, of superseding that beautiful but defective mechanism, which had held a prominent place in all cotton mills from almost the infancy of the factory system, by the following apparatus.

The Bobbin and Fly frame is now the great roving machine of the cotton manufacture; to which may be added, for coarse spinning, the tube roving frame. Of such a complicated machine as the bobbin and fly frame, it is not possible to give an adequately detailed description in the space due to the subject in this Dictionary. Its mechanical combinations are however so admirable as to require such an account as will make its functions intelligible by the general reader.

Fig. 601 exhibits a back view of this machine; and *fig.* 602 a section of some of the parts not very visible in the former figure. The back of the machine is the side at which the cotton is introduced between the drawing rollers.

The cans, filled with slivers at the drawing frame, are placed in the situation marked B, *fig.* 601, in rows parallel with the length of the machine. The sliver of each can or the united slivers of two contiguous cans are conducted upwards along the

Digitized by Google

surface of a sloping board *f*, and through an ironstaple or guide *e*, betwixt the usual triple pair of drawing rollers, the first of which is indicated by *a b*. In *fig.* 600, for the purpose of simplifying the figure, the greater part of these rollers and their subordinate parts are omitted. After the slivers have been sufficiently extended and attenuated between the rollers, they proceed forwards, towards the spindles *i i i*, where they receive the twist, and are wound upon the bobbins *h*. The machine delineated contains thirty spindles, but many bobbin and fly frames contain double or even four times that number. Only a few of the spindles are shown in *fig.* 601, for fear of confusing the engraving.

602

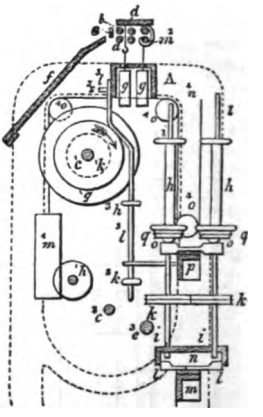

With regard to the drawing functions of this machine, we have already given abundant explanation, so far as the properties and operation of the rollers are concerned. The frame-work of this part of the machine, called the *roller beam*, is a cast iron bench, upon which nine bearers *c*, are mounted for carrying the rollers. The fluted rollers *a a a*, *fig.* 603, are constructed in four pieces for the whole length, which are parted from each other by thinner smooth cylindric portions *z*, called necks. Seven such partings for four rollers, and one parting for two rollers, constitute together the 30 fluted rollers of which the whole series consists. The coupling of these roller subdivisions into one cylinder, is secured by the square holes *x*, and square pins *y*, *fig.* 603, which fit into the holes of the adjoining subdivision. The top or pressure rollers *b*, are twofold over the whole set; and the weighted saddle presses upon the neck *w*, which connects every pair, as was already explained under *fig.* 596. These weights, *g g*, *fig.* 602, are applied in this as in the *drawing frame*; *d*, are the bars faced with flannel for cleaning the top rollers. A similar bar is applied beneath the rollers, to keep the flutings clean.

603

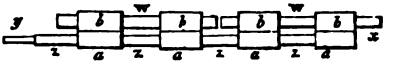

The structure and operation of the spindles *i* may be best understood by examining the section *fig.* 604. They are made of steel, are cylindrical from the top down to a^2, but from this part down to the steel tipt rounded points they are conical. Upon this conical portion there is a pulley, *k*, furnished with two grooves in its circumference, in which the cord runs that causes the spindle to revolve. The wooden bobbin *h*, is slid upon the cylindrical part, which must move freely upon it, as will be presently explained. To the bobbin another two-grooved pulley or whorl *g* is made fast by means of a pin *r*, which passes through it; by removing this pin, the bobbin can be instantly taken off the spindle. The upper end of the spindle bears a fork *s t*, which may be taken off at pleasure by means of its left-handed screw; this fork or flyer, has a funnel-formed hole at *v*. One arm of the fork is a tube *s*, *u*, open at top and bottom; the leg *t*, is added merely as a counterpoise to the other. In *fig.* 602, for the sake of clearness, the forks or flyers of the two spindles here represented are left out; and in *fig.* 601 only one is portrayed for the same reason, It is likewise manifest from a comparison of these two figures that the spindles are alternately placed in two rows, so that each spindle of the back range stands opposite the interval between two in the front range. The object of this distribution is economy of space, as the machine would need to be greatly longer if the spindles stood all in one line. If we suppose the spindles and bobbins (both of which have independent motions) to revolve simultaneously and in the same direction, their operation will be as follows: The sliver properly drawn by the fluted rollers, enters the opening of the funnel *v*, proceeds thence downwards through the hole in the arm of the fork, runs along its tube *u*, *s*, and then winds round the bobbin. This path is marked in *fig.* 604 by a dotted line.

604

The revolution of the spindles in the above circumstances effects the twisting of the sliver into a soft cord; and the flyer *s*, *t*, or particu-

Digitized by Google

larly its tubular arm *s*, lays this cord upon the bobbin. Were the speed of the bobbins equal to that of the spindles, that is, did the bobbin and spindle make the same number of turns in the same time, the process would be limited to mere twisting. But the bobbin anticipates the flyers a little, that is, it makes in a given time a somewhat greater number of revolutions than the spindle, and thereby effects the continuous winding of the cord upon itself. Suppose the bobbin to make 40 revolutions, while the spindle completes only 30; 30 of these revolutions of the bobbin will be inoperative towards the winding-on, because the flyers follow at that rate, so that the cord or twisted sliver will only be coiled 10 times round the bobbin, and the result as to the winding-on will be the same as if the spindle had stood still, and the bobbin had made $40 - 30 = 10$ turns. The 30 turns of the spindles serve, therefore, merely the purpose of communicating twist.

The mounting and operation of the spindles are obviously the same as they are upon the household flax wheel. In the bobbin and fly frame there are some circumstances which render the construction and the winding-on somewhat difficult, and the mechanism not a little complicated. It may be remarked in the first place, that as the cord is wound on, the diameter of the bobbin increases very rapidly, and therefore every turn made round it causes a greater length of roving to be taken up in succession. Were the motions of the bobbins to continue unchanged in this predicament, the increased velocity of the winding-on would require an increased degree of extension or it would occasion the rupture of the cord, because the front fluted rollers move with uniform speed, and therefore deliver always the same length of sliver in the same time. It is therefore necessary to diminish the velocity of the bobbins, or the number of their turns, in the same proportion as their diameter increases, in order that the primary velocity may remain unchanged. Moreover it is requisite for the proper distribution of the cord upon the bobbin, and the regular increase of its diameter, that two of its successive convolutions should not be applied over each other, but that they should be laid close side by side. This object is attained by the up and down sliding motion of the bobbin upon the spindle, to the same extent as the length of the bobbin barrel. This up and down motion must become progressively slower since it increases the diameter of the bobbin at each range, by a quantity equal to the diameter of the sliver. What has now been stated generally, will become more intelligible by an example.

Let it be assumed that the drawing rollers deliver, in 10 seconds, 45 inches of roving, and that this length receives 30 twists. The spindles must, in consequence, make 30 revolutions in 10 seconds, and the bobbins must turn with such speed, that they wind up the 45 inches in 10 seconds. The diameter of the bobbin barrels being $1\frac{1}{2}$ inches, their circumference of course $4\frac{1}{2}$ inches, they must make 10 revolutions more in the same time than the spindles. The effective speed of the bobbins will be thus $30 + 10 = 40$ turns in 10 seconds. Should the bobbins increase to 3 inches diameter, by the winding-on of the sliver, they will take up 9 inches at each turn, and consequently 45 inches in 5 turns. Their speed should therefore be reduced to $30 + 5 = 35$ turns in 10 seconds. In general, the excess in number of revolutions which the bobbins must make over the spindles is inversely as the diameter of the bobbins. The speed of the bobbins must remain uniform during the period of one ascent or descent upon their spindle, and must diminish at the instant of changing the direction of the up and down motion; because a fresh range of convolutions then begins with a greater diameter. When, for example, 30 coils of the sliver or rove are laid in one length of the bobbin barrel, the bobbin must complete its vertical movement up or down, within 30 seconds in the first case above mentioned, and within 60 seconds in the second case.

The motions of the drawing rollers, the spindles, and bobbins are produced in the following manner:—A shaft c', *figs.* 601 and 602, extending the whole length of the machine, and mounted with a fly-wheel d', is set in motion by a band from the running pulley upon the shaft of the mill, which actuates the pulley a'. b' is the loose pulley upon which the band is shifted when the machine is set at rest Within the pulley a', but on the outside of the frame, the shaft c' carries a toothed wheel b^2, with 50 teeth, which by means of the intermediate wheel c^2 turns the wheel d^2 upon the prolonged shaft of the backmost fluted roller (m^2, *fig.* 602). This wheel, d^2, has usually 54 teeth: but it may be changed when the roove is to receive more or less twist; for as the spindles revolve with uniform velocity, they communicate the more torsion the less length of sliver is delivered by the rollers in a given time. Upon the same shaft with d', a pinion, e^2, of 32 teeth is fixed, which works in a wheel, f^2, of 72 teeth. Within the frame a change pinion, g^2, is made fast to the shaft of f^2. This pinion, which has usually from 24 to 28 teeth, regulates the drawing, and thereby the fineness or *number* of the roving. It works in a 48-toothed wheel, h^2, upon the end of the backmost fluted roller *a*, *fig.* 602. The other extremity of the same roller, or, properly speaking, line of

Digitized by Google

rollers, carries a pinion, l^1, furnished with 26 teeth, which, by means of the broad intermediate wheel k^2, sets in motion the pinion l^2 of 22 teeth upon the middle roller. When the diameter of all the drawing rollers is the same, suppose 1 inch, their proportional velocities will be, with the above number of teeth in the wheel work, if q^2 have 24 teeth, as 1 : 1·18 : 4·5 ; and the drawn sliver will have 4½ times its original length. The front or delivery roller of the drawing frame is of late years usually made 1¼ or 1⅜ inches in diameter. If 625 feet of the sliver from the drawing frame weighed one pound, 2790 feet of the roving will now go to this weight, and the number will be 1·12 ; that is, 1 hank and 12 hundredths to the pound. The front pair of fluted rollers makes about 90 revolutions, and delivers 282·6 inches of roving in the minute, when of one inch diameter.

The spindles *i* (*figs.* 601 and 602) rest with their lower ends in steps, *l*, which are fixed in an immovable beam or bar *m*. To protect it from dust and cotton filaments, this beam is furnished with a wooden cover *n*, in which there are small holes for the passage of the spindles right over the steps. In *fig.* 602, two of the eight covers *n*, which compose the whole range *m*, are removed to let the steps be seen. The cylindrical part of each spindle passes through a brass ring *o* ; and all these 30 rings, whose centres must be vertically over the steps *l*, are made fast to the copping beam *p*. This beam is so called, because it is destined not merely to keep the spindles upright by the rings attached to it, but, at the same time, to raise and lower along the spindles the bobbins which rest on these rings ; for which purpose the two racks, or toothed bars, m^2 m^2, made fast to it, are designed, as will be presently explained. To effect the revolution of the spindles, there are attached to the main shaft *c* two whorls or pulleys, *e f'*, each bearing four grooves of equal diameter. Each of these pulleys puts one half of the spindles in motion, by means of a cord, which after going round the whorls *k*, turns four times about the pulleys of the shaft *c'*. Two guide pulleys, *h'*, each four-grooved, and two others, *i'*, with a single groove, which turn independently of the others upon the above shaft, serve to give the whorl cords the proper direction, as well as to keep them tight. The spindles revolve 200 times or thereby in the minute ; and therefore impart two turns or twists to every three inches of the roving.

The revolution of the bobbins is independent of that of the spindles, although it likewise proceeds from the shaft *c'*, and differs from it by being a continually retarded motion. The simplest method of effecting this motion, is by means of the wooden or tin plate cone *k'*, which revolves equally with the shaft *c'*, and at the same time slides along it.

The manner in which this operates is shown in section in *fig.* 605. Here we perceive the rod q^3, which extends from the base towards the narrow end of the truncated

606

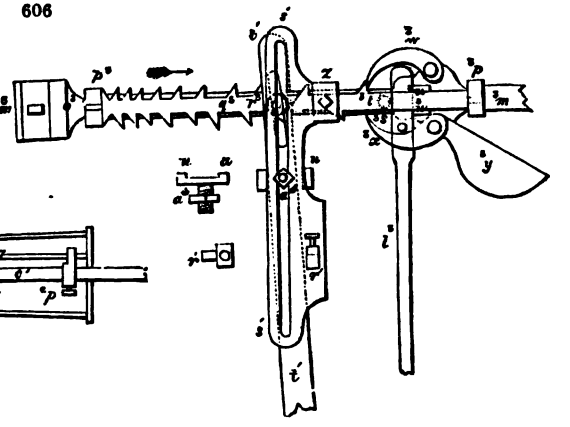

605

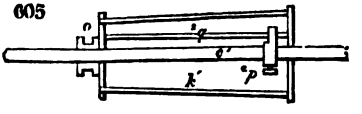

cone, and p^3 a forked bearer or carrier made fast to the shaft *c'* by a screw, which compels the cone by means of that rod to obey the movement of *c'*. In the large end of the cone there is an aperture, through which the bearer can be got at. The smaller end carries outside a projection o^2, provided with a groove, which is embraced by the forked end of the rod *q'*, *fig.* 605, that serves to shove the cone along upon the shaft *c'*. Directly under the cone, there is an upright round pillar *p'*, upon which the holder *o'* of the two guide pulleys *l'*, is adjustable, A bar r^2 placed alongside of the holder, prevents its turning round, but allows it to slide along *p'* by friction. The weight of the

Digitized by Google

holder and the pulley is sufficient to distend the endless band n', which runs from the cone k', through under the pulley l', and round the small drum m' on the shaft s^3. A pulley or whorl t^3 with four grooves, is made fast by means of a tube to this shaft, and slides along it backwards and forwards, without ever ceasing to follow its revolutions. The shaft possesses for this purpose a long fork, and the interior of the tube a corresponding tongue or catch. There is besides upon the tube beneath the pulley, at u^2, a groove that goes round it, in which the staple or forked end of an arm like v^2, *fig.* 601, made fast to the copping beam p, catches. By the up and down movement of that beam, the pulley t^3 takes along with it the arm that embraces the tube, which therefore rises and falls equally with the bobbins h', and their pulleys or whorls q. This is requisite, since the bobbins are made to revolve by the pulleys t^3 by means of 2 endless cords or bands.

The most intricate part of the mechanism is the adjustment, by which the revolution of the bobbins is continually retarded, and their up and down, or copping motion, along the spindles, is also retarded in like proportion. The vertical pulley f (towards the left end of the shaft c'), has at its right side a somewhat larger *disc* or sheave, g', with a perfectly uniform, but not a very smooth surface. Upon this sheave, a smaller horizontal pulley x' rubs, whose upper face is covered with leather to increase the friction. The under end of the shaft y^3 of the pulley x' turns in a step, which is so connected with the arm v' of the large bent lever t' v', that it always stands horizontally, whatever direction the arms of that lever may assume. The shaft y^3 is steadied at top by an annular holder or bush, which embraces the fast arm x^3 with its forked end. Upon i s opposite side, this arm carries a pulley y^3, upon which a cord goes, that is made fast to the holder of the shaft y^2, and loaded with the weight z'. The weight presses the pulley x' against the surface of g', in such wise as to effect the degree of friction necessary in order that the revolution of g' may produce an uninterrupted revolution in x'. A pinion w', whose length must be equal at least to the semi-diameter of the sheave g', is placed upon the under end of the shaft y^3. It has 22 teeth, and takes into a 62-toothed horizontal wheel z^3. Upon the upper end of this wheel the conical pinion a^3 is made fast, which may be changed for changing the speed, but usually has from 28 to 30 teeth, By this pinion the conical wheel b^3 is turned, which has 30 teeth, and whose shaft is c^3. This shaft carries upon its opposite end a six-leaved pinion, d^3, which takes into the calender wheel f^3, formed with cogs like a trundle, upon the long shaft e^3. In *fig.* 607 the wheel f^3 is exhibited with its pinion d^3. Here we may remark that in the circumference of the wheel there is a vacant place, g^3, void of teeth. When by the motion of the wheel, the pinion comes opposite to this opening, it turns round about the last tooth of the wheel, falls into the inside of the toothed circle marked by the dotted lines, and thus gives now an inverse movement to the wheel f^3, while itself revolves always in the same direction. This reverse motion continues till the opening g^3 comes once more

607

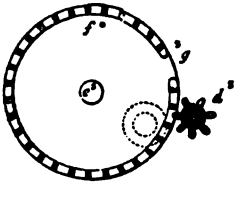

608

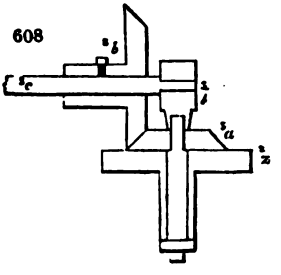

opposite to the pinion, when this turns round about the last tooth of that side, and begins again to work in the exterior teeth. Thus, by the uniform motion of d^3 and its dependent parts, the wheel f^3, with its shaft e^3, revolves alternately to the right hand and the left. That this result may ensue, the shaft c^3 of the pinion must be able to slide endwise, without losing its hold of a^3 and b^3. This adjustment is effected by placing the end of the said shaft, nearest b^3, in a box or holder i^3, in which it can turn, and which forms a vertical tube to this box, as a downward prolongation which is fixed to the tail of the conical pinion a^3. *Fig.* 608 shows this construction in section upon an enlarged scale. The second bearer of the shaft nearest d^3, must possess likewise the means of lateral motion. When therefore the pinion d^3 shifts through the opening of the wheel f^3 outwards or inwards, its shaft c^3, makes a corresponding small angular motion on the pivot of a^3, by means of the tube i^3; a^3 and b^3 remain thereby completely in gear with one another.

The above-described alternate revolutions of the wheel f^3 serve to produce the up

Digitized by Google

and down motions of the bobbins. The shaft e^3 has for this purpose two pinions, n^2 n^2, which work in the rack teeth m^2 m^2 of the copping rail p, and thus alternately raise and sink it with the bobbins which rest upon it. The weight of the copping beam and all its dependent part, is poised by two counterweights m^4, whose cords run over the pulleys o^4 o^4 o^4, *fig.* 601, and have their ends made fast to the frame, so as to make the upward motion as easy as the downward. The two upper pulleys out of the three of each weight are fixed to the frame; the under one, round which the cord first runs, is attached to the copping beam, rising and falling along with it.

As long as the friction disc x' remains at the same height, the pulley g' derives its motion from the same circle of the said disc, and the up and down motion of the copping beam is also uniform. But when that disc ascends so as to describe with its edge a small circle upon the face of g', its motion must become proportionally more slow. This is the method or principle of retarding the copping motions of the bobbins. It has been shown, however, that the rotation of the bobbins should be also retarded in a progressive manner. This object is effected by means of the cone k', which, as the band n' progressively approaches towards its smaller diameter, drives the pulleys or whorls q of the bobbins with decreasing speed, though itself moves uniformly quick with the shaft c'. To effect this variation, the cone is shifted lengthwise along its shaft, while the band running upon it remains continually in the same vertical plane, and is kept distended by the weight of the pulley o'. The following mechanism serves to shift the cone, which may be best understood by the aid of the figures 609, 610, and 606. A long cast iron bar m^3,

609

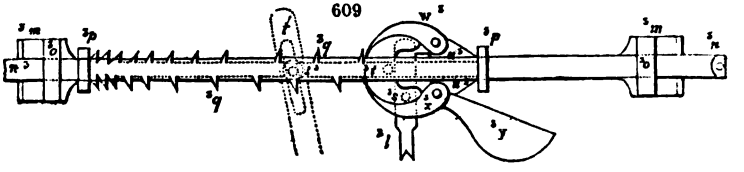

610

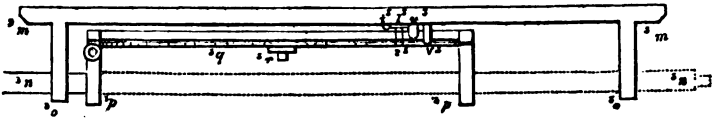

which bears two horizontal projecting puppets, o^3 o^3, is made fast to the front upright face of the copping beam A. Through the above puppets a cylindrical rod n^3 passes freely, which is left out in *fig.* 606, that the parts lying behind it may be better seen. Upon this rod there is a kind of fork, p^3 p^3, to which the alternating rack bars q^3 are made fast. The teeth of these racks are at unequal distances from each other, and are so arranged, that each tooth of the under side corresponds to the space between two teeth in the upper side. Their number depends upon the number of coils of roving that may be required to fill a bobbin; and consists in the usual machines of from 20 to 22. The rod n^3 may be shifted in the puppet o^3, like the fork p^3 of the rack-rod, upon the rod n^3 and along the surface of m^3, where two wings u^3 u^3 are placed to keep the fork in a straight direction. Upon the bar m^3, there are the pivots or fulcra of two stop catches w^3 x^3, of which the uppermost presses merely by its own weight, but the undermost by means of a counterweight y^3, against the rack, and causes them thus to fall in between the teeth. In *fig.* 610, v^3 shows the pivot of the catch or detent w^3 by itself, the detent itself being omitted, to render the construction plainer. A pushing rod l^3, upon which there is a pin above at s^3, that passes behind the rack rod, between this and the bar m^3, has for its object to remove at pleasure the one or the other of the two catches; the upper, when the upper end of the rod pushes against it; the under, by means of the above mentioned pin s^3. Both the catches are never raised at once, but either the under or the upper holds the rack bar fast by pressing against one of the teeth. The vertical motion up or down, which the rod l^3 must take to effect the lifting of the catches, is given to it from the copping beam p; since upon it a horizontal arm v^3, *fig.* 610, is fixed, that lays hold of that rod. Upon the pushing rod are two rings h^3 and k^3, each made fast by a screw. When the copping beam is in the act of going up, the arm v^3 at the end of this movement pushes against the ring h^3, raises up the rod l^3, and thus removes the catch w^3, *fig.* 606, from the teeth of the rod q^3, before which it lies flat. At the descent of the copping rail, v^3 meets the ring k^3, when the motion in this direction is nearly completed, draws down the rod l^3 a little, by means of the same, and thereby effects the removal of the catch x^3, *fig.* 610, from the rod q^3. Every time that one of the catches is lifted, the rack recovers its freedom to advance a

Digitized by Google

little bit in the direction of the arrow; so far, namely, till the other catch lays hold upon the tooth that next meets it. The reason is thus manifest why the teeth of the upper and under sides of the bar q^3 are not right opposite to each other, but in an alternate position.

From the rack-bar, the sliding of the cone k', and the raising of the shaft y^3, each by minute steps at a time, is produced as follows: —

A large rectangular lever t^1, v^1, whose centre of motion is at p^4, has at the upper end of its long arm t^1, a long slot through which a stud r^3 upon the rack q^3 goes (*figs.* 606, 609, 610,) so that the lever must follow the motions of the rack bar. The end of the short arm of the lever bears, as already mentioned, the step of the shaft y^2; hence the friction disc x^1 will be raised in proportion as the rack bar advances, and will come nearer to the middle point of g^1; consequently, its revolution and the shifting of the bobbins will become slower. Upon the cylindrical rod n^3, the piece s^1 s^1 furnished with a long slot is made fast, by means of a tube z^3 (*fig.* 606), and a screw. A fork u u, which by means of the screw nut a^4 is made fast in the slot, embraces the arm t^1 of the bent lever; and a tube r^1 riveted to the surface of s^1, is destined to take up the draw rod q^1 of the cone k^1, *fig.* 606. A weight f^4, whose cord b^4 is made fast to the cylindrical rod n^3 endeavours to draw this rod continually in the direction of the arrow. In consequence of this arrangement, every time that the pushing bar l^3 lifts up one of the catches, the cone k^1, the lever t^1 v^1, and by it the rack bar q^3, are set in motion. It is obvious that the motion of the cone may be made greater or less, according as the fork u u is fixed further up or down in the slot of s^1.

The number of the teeth upon the bar q^3, is so ordered, that the bobbins are quite full when the last tooth has reached the catch and is released by it. The rack bar, being restrained by nothing, immediately slides onwards, in consequence of the traction of the weight f^4, and brings the machine to repose by this very movement, for which purpose the following construction is employed. A rectangular lever which has its centre of motion in g^4 is attached to the side face of the beam A, and has at the end of its horizontal arm a pulley d^4, over which the cord b^4 of the counterweight f^4 is passed. The end of the perpendicular arm is forked, and embraces the long and thin rod k^4, to whose opposite end the fork l^3 is made fast. Through this fork the band which puts the machine in motion passes down to the pulley a^1. With the bent lever another rod c^4 is connected at h^4, which lies upon the puppet e^3 with a slot at e^4, and hereby keeps the lever g^4 in its upright position, notwithstanding the weight f^4. In the moment when, as above stated, the rack bar q^3 becomes free, the arm p^3 of its fork pushes in its rapid advance against the under oblique side of e^4, raises this rod, and thereby sets the lever g^4 free, whose upright arm bends down by the traction of the weight, drives the rod k^4 before it into the ring i^4 fastened to it, and thus by means of the fork l^3 shifts the band upon the loose pulley b^1. But the machine may be brought to repose or put out of gear at any time merely by shifting the rod k^4 with the hand.

The operation of the bobbin and fly frame may be fully understood from the preceding description. A few observations remain to be made upon the cone k^1, the rack-bar q^3, and the speed of the work.

When we know the diameter of the empty bobbins, and how many turns they should make in a given time in order to wind on the sliver delivered by the fluted rollers and the spindles; when we consider the diameters of the spindle pulleys q, and t^2, as also the drum m^1, *fig.* 606, we may easily find the diameter which the cone must have for producing that number of turns. This is the diameter for the greatest periphery of the base. The diameter of the smaller is obtained in the same way, when the diameter of the bobbins before the last winding-on, as well as the number of turns necessary in a given time, are known.

A bobbin and fly-frame of the construction just described delivers from each spindle in a day from 6 to 8. lbs of roving of the fineness of 1½ English counts. One person can superintend two frames, piece the broken slivers, and replace the full bobbins by empty ones. The loss of cotton wool in this machine consists in the portions carried off from the torn slivers, and must be returned to the lapping machine.

The fine bobbin and fly frame does not differ essentially from the preceding machine. The rovings from the coarse bobbin and fly frame are placed in their bobbins in a frame called the *creel*, behind and above the roller beam, two bobbins being allowed for one fluted portion of the rollers. These rovings are united into one, so as to increase the uniformity of the slivers.

The invention of the beautiful machine above described is due to Messrs. Higgins of Manchester, and as improved by Henry Houldsworth, Esq., it may be considered the most ingeniously combined apparatus in the whole range of productive industry.

In the fine roving frame the sliver is twisted in the contrary direction to that of the coarse roving frame. For this reason the position of the cone is reversed, so as to present in succession to the band or strap, diameters continually greater, in order that the rotation of the bobbins may be accelerated in proportion as their size is increased,

Digitized by Google

because here the flyer and the bobbin turn in the same direction, and the winding-on is effected by the precession of the bobbin; but if the winding-on took place by its falling behind, as in the coarse bobbin and fly frame, that is, if the flyer turned less quickly than the bobbin, the rotatory speed of the bobbin would be uniformly retarded; in which case the cone would be disposed as in the coarse frame.

When by any means whatever an uniform length of thread is delivered by the rollers in a given time, the bobbin must wind it up as it is given out, and must therefore turn with a speed decreasing with the increase of its diameter by successive layers of thread. Hence proceeds the proposition, that the velocity of the bobbin must be in the inverse ratio of its diameter, as already explained.

With respect to the bobbin and fly frame, the twist is given to the sliver by means of a spindle or flyer which turns in the same direction with the bobbin, but quicker or slower than it, which establishes two predicaments. The first case is where the flyer turns faster than the bobbin. Here the winding-on goes in advance, as in the coarse roving frame, or as in throstle spinning, where the yarn is wound on merely in consequence of the friction of the lower disc or washer of the bobbin upon the copping rail, and of the drag of the yarn. The second case is where the flyer revolves more slowly than the bobbin. Here the winding goes on in arrear, and as the bobbin turns faster, it must receive a peculiar motion, which is uniformly retarded in the ratio of its increase of diameter. This is the case with the fine bobbin and fly frame. When the cone is placed as in *fig.* 601, the winding-on, in either the coarse or fine frame, results from the difference, whether greater or less, between the rotatory speed of the flyer and bobbin.

The motion of the bobbin and spindle is simultaneous, and takes place in the same direction, with a difference varying more or less with the varying diameters of the bobbins. To render the matter still clearer, suppose for a moment the spindle to he motionless, then the bobbin must revolve with such a speed as to lap-on the roving as fast as the rollers deliver it. The sliver comes forward uniformly; but the bobbin, by its increase of diameter, must revolve with a speed progressively slower. Now, suppose the spindle set a-whirling, it is obvious that the bobbin must add to the movement requisite for winding-on the sliver, that of the spindle in the case of winding-on in arrear, or when it follows the flyers, and subtract its own motion from the twisting motion of the spindles in the case of winding-on in advance, that is, when the bobbin precedes or turns faster than the flyers; for the diameter of the bobbin being $1\frac{1}{2}$ inch, 10 turns will take up 45 inches, Deducting these ten turns from the 30 made by the spindle in the same time, there will remain for the effective movement of the bobbin only 20 turns; or when the diameter of the bobbin becomes 3 inches, 5 turns will take up the 45 inches, if the spindle be at rest; but if it makes 30 turns in the time, the effective velocity of the bobbin will be 25 turns, $= 30 - 5$. Hence in the fine bobbin and fly frame, the number of turns of the spindle, *minus* the number of turns made by the bobbin in equal times, is in the inverse ratio of the diameter of the bobbin. We thus perceive, that in the coarse frame the bobbin should move faster than the spindle, and that its speed should always diminish; whilst in the fine frame the bobbin should move slower than the spindle, but its speed should always increase. It is easy to conceive, therefore, why the cones are placed in reverse directions in the two machines. Not that this inversion is indispensably necessary; the cone of the fine roving frame might, in fact, be placed like that of the coarse roving frame; but as the torsion of the roving becomes now considerable, and as on that account the bobbin would need to move still faster, which would consume a greater quantity of the moving power, it has been deemed more economical to give its movement an opposite direction.

We mentioned that the twist of the sliver in the fine roving frame was the reverse of that in the coarse; this is a habit of the spinners, for which no good reason has been given.

The divisions of the rack-bar, and the successive diameters of the cone, must be nicely adjusted to each other. The first thing to determine is how much the rack should advance for every layer or range of roving applied to the bobbin, in order that the cone may occupy such a place that the strap which regulates the pulley barrel may be at the proper diameter, and thus fulfil every condition. The extent of this progressive movement of the rack depends upon the greater or less taper of the cone, and the increase which the diameter of the bobbin receives with every transverse, that is, every layer of roving laid on. But care should be taken not to taper the cone too rapidly, especially in the fine roving frame, because in its progress towards the smaller end the strap would not slide with certainty and ease. We have already shown that the number of effective turns of the bobbin is, inversely, as the diameter of the bobbin, or directly, as the successive diameters of the different points of the cone.

H. Houldsworth, Esq., has introduced a capital improvement into the bobbin and fly frame, by his differential or equation-box mechanism, and by his spring fingers, which, by pressing the soft sliver upon the bobbin, cause at least a double quantity to

Digitized by Google

be wound upon its barrel, With the description of his patent equation-box, we shall conclude the description of the bobbin and fly frame.

Fig. 611 represents a portion of a fly frame with Mr. Houldsworth's invention. *a a a* are the front drawing rollers, turning upon bearings in the top of the machine, and worked by a train of toothed wheels, in the way that drawing rollers are usually actuated.

From the drawing rollers, the filaments of cotton or other material, *b b*, are brought down to, and passed through the arms of the flyers *c c*, mounted on the tops of the spindles *d d*, which spindles also carry the loose bobbins *e e*. In the ordinary mode of constructing such machines, the spindles are turned by cords or bands passing from a rotatory drum round their respective pulleys or whorls *f*, and the loose bobbins *e*, turn with them by the friction of their slight contact to the spindle, as before said; in the improved machine, however, the movements of the spindles and the bobbins are independent and distinct from each other, being actuated from different sources.

The main shaft of the engine *g*, turned by a band and rigger A as usual, communicates motion by a train of wheels *h*, through the shaft *i*, to the drawing rollers at the reverse end of the machine, and causes them to deliver the filaments to be twisted. Upon the main shaft *g*, is mounted a cylindrical hollow box or drum-pulley, whence one cord passes to drive the whorls and spindles *f* and *d*, and another to drive the bobbins *e*.

This cylindrical box pulley is made in two parts, *k* and *l*, and slipped upon the axle with a toothed wheel *m*, intervening between them. The box and wheel are shown detached in *fig.* 612, and partly in section at *fig.* 613. That portion of the box with

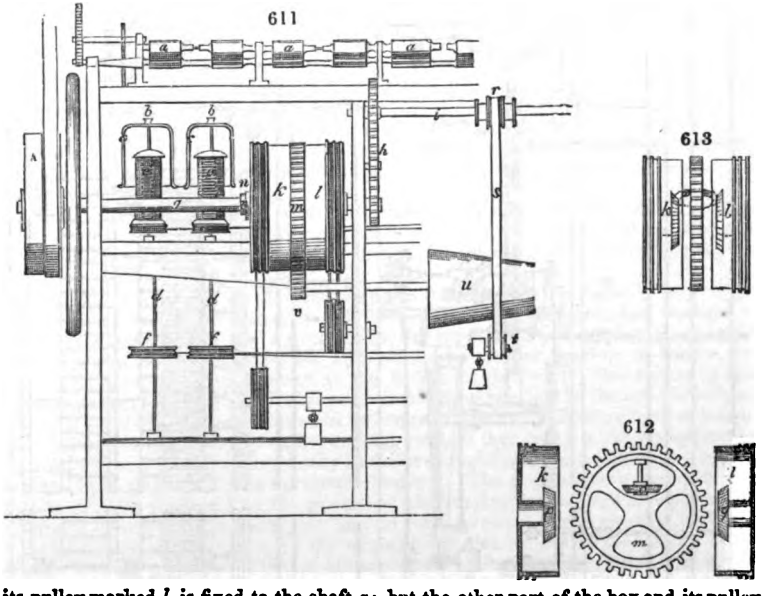

its pulley marked *l*, is fixed to the shaft *g*; but the other part of the box and its pulley *k*, and the toothed wheel *m*, slide loosely round upon the shaft *g*, and when brought in contact and confined by a fixed collar *n*, as in the machine shown at *fig.* 611, they constitute two distinct pulleys, one being intended to actuate the spindles, and the other the bobbins.

In the web of the wheel *m*, a small bevel pinion *o*, is mounted upon an axle standing at right angles to the shaft *g*, which pinion is intended to take into the two bevel pinions *p* and *q*, respectively fixed upon bosses, embracing the shaft in the interior of the boxes *k* and *l*. Now it being remembered that the pinion *q*, and its box *l*, are fixed to the shaft *g*, and turn with it, if the loose wheel *m* be independently turned upon the shaft with a different velocity, its pinion *o*, taking into *q*, will be made to revolve upon its axle, and to drive the pinion *p* and pulley box *k*, in the same direction as the wheel *m*; and this rotatory movement of the box *k* and wheel *m*, may be faster or slower than the shaft *g*, and box *l*, according to the velocity with which the wheel *m* is turned.

Having explained the construction of the box pulleys *k* and *l*, which are the peculiar features of novelty claimed under this patent, their office and advantage will be seen describing the general movements of the machine.

Digitized by Google

The main shaft *g*, being turned by the band and rigger A, as above said, the train of wheels *h*, connected with it, drives the shaft *i*, which at its reverse end has a pinion (not seen in the figures) that actuates the whole series of drawing rollers *a*. Upon the shaft *i* there is a sliding pulley *r*, carrying a band *s*, which passes down to a tension pulley *t*, and is kept distended by a weight. This band *s*, in its descent, comes in contact with the surface of the cone *u*, and causes the cone to revolve by the friction of the band running against it. The pulley *r* is progressively slidden along the shaft *i*, by means of a rack and weight not shown, but well understood as common in this kind of machines, and which movement of the pulley is for the purpose of progressively

614

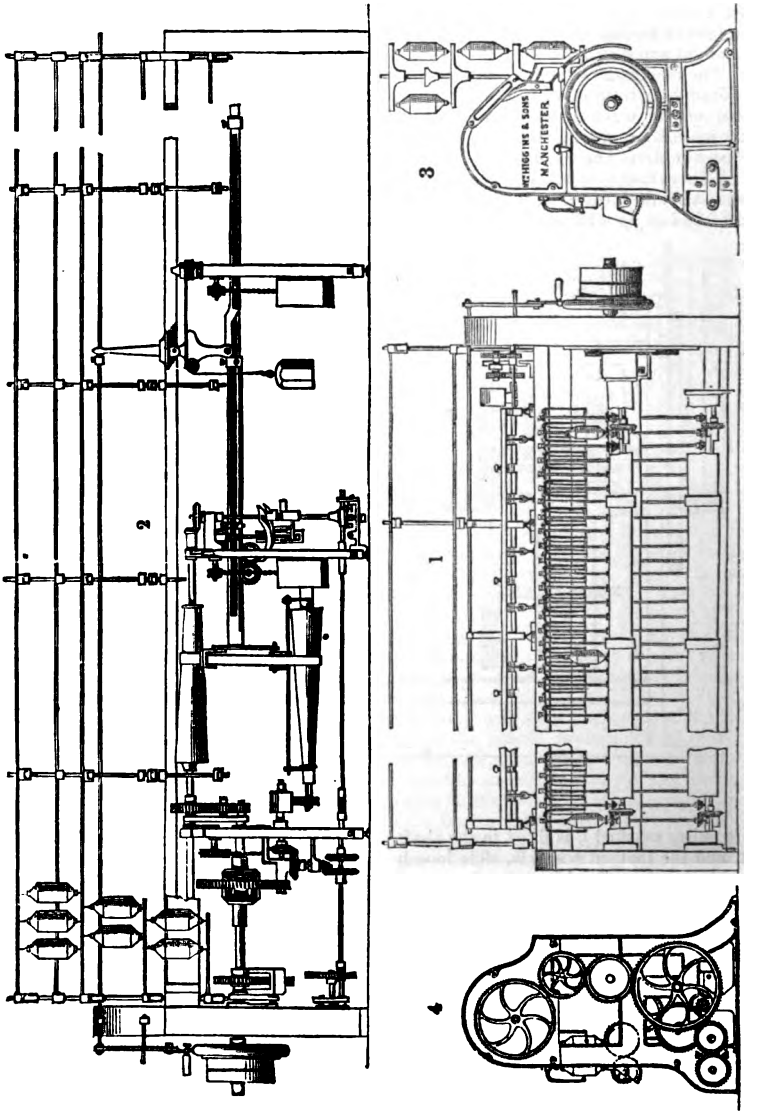

shifting the band *s* from the smaller to the larger diameter of the cone, in order that the speed of its rotation may gradually diminish as the bobbins fill by the winding-on of the yarns.

Digitized by Google

At the end of the axle of the cone *u* a small pinion *v* is fixed, which takes into the teeth of the loose wheel *m*, and as the cone turns, drives the wheel *m* round upon the shaft *g*, with a speed dependent always upon the rapidity of the rotation of the cone. Now the box pulley *l*, being fixed to the main shaft *g*, turns with one uniform speed, and by cords passing from it over guides to the whorls *f*, drives all the spindles and flyers, which twist the yarns with one continued uniform velocity; but the box pulley *k*, being loose upon the shaft, and actuated by the bevel pinions within, as described, is made to revolve by the rotation of the wheel *m*, independent of the shaft, and with a different speed from the pulley box *l*; cords passing from this pulley box *k*, over guides to small pulleys under the bobbins, communicate the motion, whatever it may be, of the pulley box *k*, to the bobbins, and cause them to turn, and to take up or wind the yarn with a speed derived from this source, independent of, and different from, the speed of the spindle and flyer which twist the yarn.

It will now be perceived, that these parts being all adjusted to accommodate the taking up movements to the twisting or spinning of any particular quality of yarn intended to be produced, any variations between the velocities of the spinning and taking up, which another quality of yarn may require, can easily be effected by merely changing the pinion *v* for one with a different number of teeth, which will cause the wheel *m*, and the pulley box *k*, to drive the bobbins faster or slower, as would be required in winding-on fine or coarse yarn, the speed of the twisting or spinning being the same.

The rovings or spongy cords, of greater or less tenuity, made on the bobbin and fly, or tube roving frame, are either spun immediately into firm cohesive yarn, or receive a further preparative process in the stretching frame, which is, in fact, merely a mule-jenny, without the second draught and second speed, and therefore need not be described at present, as it will be in its place afterwards.

Fig. 614 shows the latest construction of a bobbin and fly frame, as made by Messrs. Higgins and Sons, of Manchester. As the *principle* of action is similar to that already described it only needs to add that many improvements have been introduced by the makers, as will be seen on reference to the engraving. 1 represents a front view of the frame; 2 a view of the back of the frame; 3 shows the driving pulley and gearing end; and 4 the same end with the iron casing removed, so as to exhibit the works inside.

The spindles and bobbins being now driven by gearing instead of by bands as formerly, and greater strength of materials being introduced throughout the frame, it is capable of producing a better quality with an increased quantity of rovings than was possible formerly.

Fig 614*a* shows a section of their patent slubbing and roving frame.

By reference to this machine, it will be observed that the principal features of novelty are embodied in the arrangements for supporting and driving the spindle. The spindle is effectually supported by a stationary tubular bearing or bolster, extending from the lower spindle rail to the bottom of the flyer. This bolster is suspended on two joints at right angles to each other, attached to the spindle rail, on which it oscillates, and is supported at its upper extremity by a sliding bush or bolster attached by two similar joints to the copping rail; so that owing to the compensation afforded by these joints, whatever may be the irregularities in the action of the copping rail, the bush slides freely on the tubular bearing. The spindle revolving inside this tube is entirely unaffected by the traverse of the copping rail, so that it is impossible to bind it in any position of the rail, an evil very prevalent in the common frame.

Attention is also directed to the arrangement for attaching the pinion to its spindle without set-screw. This is accomplished by squaring the lower end of the spindle, which thus fits easily into a square hole in the pinion. This pinion is supported in an independent bearing, so that the spindle can be withdrawn from the frame and replaced without affecting the position of the pinion, rendering it easy to clean and oil the frame in half the usual time.

Another feature of novelty is contained in the improved cone frame. By this arrangement the tension of the strap can be regulated with great precision, and increased facilities obtained for doffing and commencing a new set of bobbins. It will be observed also that Preston's Patent Centrifugal Presser, suspended on an incline, has been adopted, by the action of which the presser is kept in contact with the bobbin, and prevented from flying off and breaking the roving when the frame is stopped, avoiding in this manner the defect of other centrifugal pressers.

By means of these improvements, which give a permanent and independent support to each spindle, as far up as the bottom of the flyer, or even to the socket, if considered necessary, no difficulty is found in maintaining perfect steadiness of action at a much higher velocity than has hitherto been attained by the common frame, and the spindles of slubbing frames, making a bobbin 10 × 5, revolve with

Digitized by Google

ease at 1,000 revolutions per minute; intermediate frames, making a bobbin 8 × 4, at 1,200 revolutions; roving frames, producing a bobbin 7 × 3½, at from 1,500 to 1,600

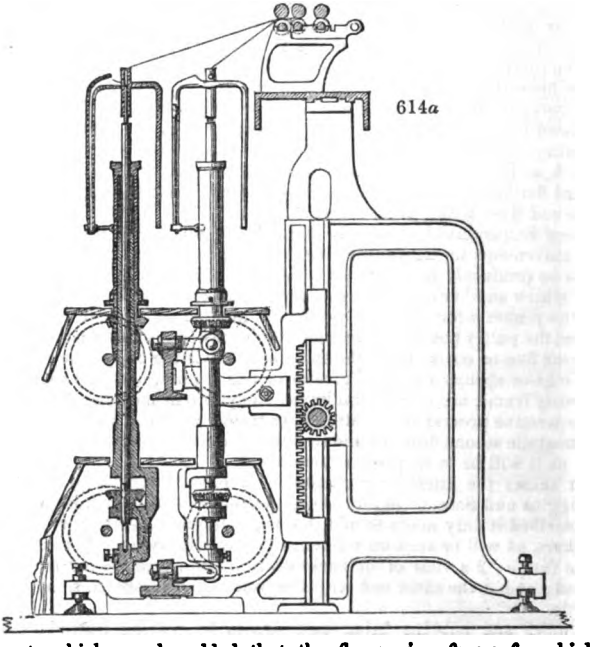

revolutions; to which may be added that the fine roving frame, for which a prize medal was given at the Exhibition of 1862, produced a 50-hanks roving with a presser on a bobbin 5 × 2¼, at a velocity of 2,000 revolutions per minute, a result which had never hitherto been attained.

Fig. 615 also represents a similar frame for rovings, made by Hethrington and Sons. Its action is the same as that already described.

615

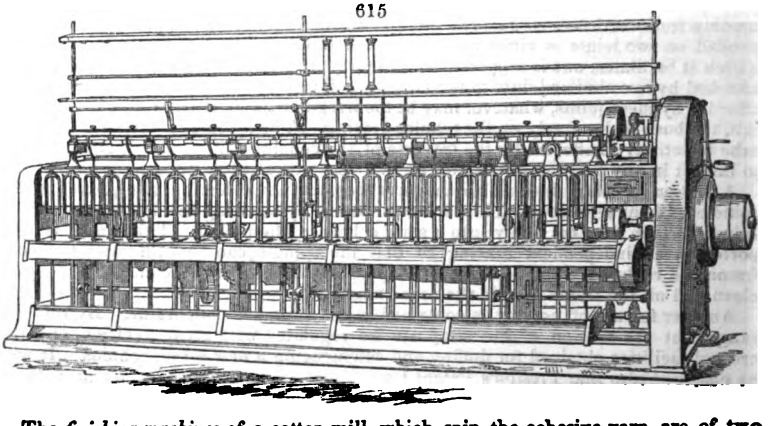

The *finishing machines* of a cotton mill, which spin the cohesive yarn, are of two classes; 1, the water-twist or throstle, in which the twisting and winding are performed simultaneously upon progressive portions of the roving; and, 2, the mule, in which the thread is drawn out and stretched, with little twist, till a certain length of about 5 feet is extended, then the torsion is completed, and the finished thread is immediately wound upon the spindles into double conical coils called cops.

The water-twist frame, so called by its inventor, Sir R. Arkwright, because it was first driven by water, is now generally superseded by the throstle frame, in which the

Digitized by Google

mechanical spinning fingers, so to speak, are essentially the same, but the mode of communicating the motion of the mill-gearing to them is somewhat different. *Fig.* 616 exhibits a vertical section of the throstle. This machine is double, possessing upon each side of its frame, a row of spindles with all their subsidiary parts. The bobbins filled with rovings from the bobbin and fly, or the tube frame, are set up in the creel *a a*, in two ranges. *b*, *c*, *d*, are the three usual pairs of drawing rollers through which the yarn is attenuated to the proper degree of fineness, upon the principles already explained. At its escape from the front rollers, every thread runs through a guide eyelet *e* of wire, which gives it the vertical direction down towards the spindles *f*, *g*. The spindles, which perform at once and uninterruptedly the twisting and winding-on of the thread delivered by the rollers, are usually made of steel, and tempered at their lower ends. They stand at *g* in steps, pass at *v* through a brass bush or collar which keeps them upright, and revolve with remarkable speed upon their axes. The bobbins *h*, destined to take up the yarn as it is spun, are stuck loosely upon the spindles, and rest independently of the rotation of the spindles upon the copping-beam *l*, with a leather washer between. Upon the top of the spindles, an iron wire fork, called a fly or flyer, *i*, *k*, is made fast by a left-hand screw, and has one of its forks turned round at the end into a little ring. The branch of the flyer at *f* is tubular, to allow the thread to pass through, and to escape by a little hole at its side, in order to reach the eyelet at the end of that fork. From this eyelet *i*, it proceeds directly to the bobbin. By the twirling of the spindle, the twisting of the portion of thread between the front roller *d*, and the nozzle *f*, is effected. The winding-on takes place in the following way:—Since the bobbin has no other connection with the spindle than that of the thread, it would but for it remain entirely motionless, relatively to the spindle. But the bobbin is pulled after it by the thread, so that it must follow the rotation of the spindle and fly. When we consider that the thread is pinched by the front roller *d*, and is thereby kept fully upon the stretch, we perceive that the rotation of the bobbin must be the result. Suppose now the tension to be suspended for an instant, while the rollers *d* deliver, for example, one inch of yarn. The inertia or weight of the bobbin, and its friction upon the copping beam *l*, by means of the leather washer, will, under this circumstance, cause the bobbin to hang back in a state of rest, till the said inch of yarn be wound on by the whirling of the fly *i*, and the former tension be restored. The delivery of the yarn by the drawing rollers, however, does not take place, inch after inch, by starts, but at a certain continuous rate; whence results a continuous retardation or loitering, so to speak, of the bobbins behind the spindles, just to such an amount that the delivered yarn is wound up at the same time during the rotation.

This process in spinning is essentially the same as what occurs in the fine bobbin and fly frame, but is here simplified, as the retardation regulates itself according to the diameter of the bobbin by the drag of the thread. In the fly frame the employment of this tension is impossible, because the roving has too little cohesion to bear the strain; and hence it is necessary to give the bobbins that independent movement of rotation which so complicates this machine.

The up and down motion of the bobbins along the spindles, which is required for the equal distribution of the yarn, and must have the same range as the length of the bobbin barrels, is performed by the following mechanism. Every copping rail *l*, is made fast to a bar *m*, and this, which slides in a vertical groove or slot at the end of the frame, is connected by a rod *n*, with an equal-armed, movable lever *o*. The rod *p* carries a weight *r*, suspended from this lever; another rod *q*, connects the great lever *o*, with a smaller one *s*, *t*, upon which a heart-shaped disc or pulley *u*, works from below at *t*. By the rotation of the disc *u*, the arm *t*, being pressed constantly down upon it by the reaction, the weight *r* must alternately rise and fall; and thus the copping rail *l* must obviously move with the bobbins *h* up and down; the bobbins upon one side of the frame rising, as those upon the other sink. Strictly considered, this copping motion should become slower as the winding-on proceeds, as in the fly-roving frame; but, on account of the smallness of the finished thread, this construction, which would render the machine complicated, is without inconvenience neglected, with the result merely that the coils of the yarn are successively more sparsely laid on, as the diameter of the bobbin increases.

The movement of the whole machine proceeds from the shaft of a horizontal drum, which drives the spindles by means of the endless bands *x x*. Each spindle is mounted with a small pulley or wharf *w*, at its lower part, and a particular band, which goes round that wharf or whorl, and the drum *y*. The bands are not drawn tense, but hang down in a somewhat slanting direction, being kept distended only by their own weight. Thus every spindle, when its thread breaks, can readily be stopt alone, by applying a slight pressure with the hand or knee, the band meanwhile gliding loosely round the whorl.

Digitized by Google

The velocities of rotation of the three drawing rollers are, according to this arrangement, in the proportion of 1 : 1½ : 8 ; and as their diameters are the same, namely, one inch, the elongation of the yarn in spinning is eight-fold. If, for example, the roving was of the number 4½, the yarn would become No. 36. The extension of the thread may be changed by changing the wheels of the drawing rollers. To perceive the power of this change, let us put, for example, in the place of the 18-toothed wheel of the back rollers, a wheel with 16 teeth; we shall find that the elongation will amount, in that case, only to 7½ times, whence the number of the yarn would come out 32 = 7½ × 4½. The extension by the throstle is extremely various; it amounts, in some cases, to only 4 times; at others to 10, 12, or even 15.

The copping motion of the bobbins is produced in consequence of a bevel pinion working in a small bevel wheel upon an upright shaft; while this wheel gives a slow motion by means of a worm screw to the wheel of the heart-shaped pulley *u*, *fig.* 616.

The driving pulley makes about 600 turns in a minute; and as the diameter of the drum *y*, *fig.* 616, is six times the diameter of the spindle wharves *w*, it will give 3600 turns to the spindle in that time. If the pulley be driven faster, for example, 700 times in a minute, it will increase the revolutions of the spindles to 4200. The degree of twist which will be thereby imparted to the yarn, depends, with like speed of spindles, upon the rate at which the soft yarn is delivered by the drawing rollers; for the quicker this delivery, the quicker is the winding-on, and the less twist goes into a given length of yarn. If, for example, the front rollers *d*, turn 24 times in a minute, giving out of course 72 inches of yarn in this time, upon which the 3600 revolutions of the spindle are expended, there will be 50 twists to every inch of yarn, By changing the wheel-work of *fig.* 615, or by sticking greater or smaller wharves upon the spindles, the proportion between their velocity and that of the drawing rollers, and thence the degree of twist, can be modified at pleasure.

616

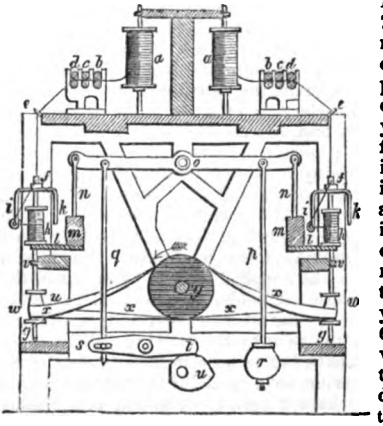

The number of spindles in a throstle frame 12 feet long, is about 60 on each side. The drawing rollers are coupled together as in the bobbin and fly frame, so that each row forms one continuous cylinder. There is a complete roller beam on each side; each of the rollers of the front row is pressed by its top rollers with a weight of ten or twelve pounds; but those of the middle and back rows bear weights of only one pound. In the throstles, there is a guide bar which traverses a small way horizontally to the

617

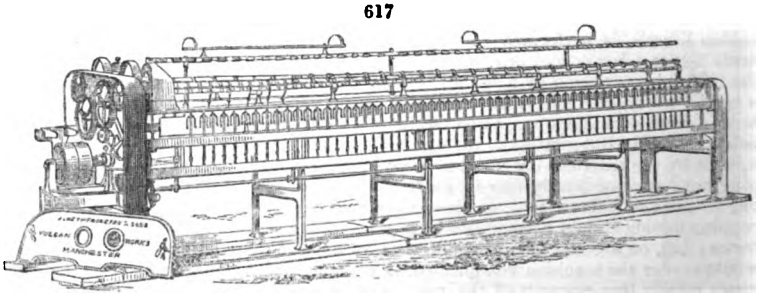

left and right, in front of the roller beam, to lead the thread along different points of the rollers, and thus prevent the leather of the top ones from being grooved by its constant pressure in one line.

For the service of 240 spindles, in two double frames, one young woman, and an assistant piecer are sufficient. They mend the broken ends, and replace the empty bobbins in the creel with full ones, and the full bobbins of the throstle by empty ones. The average quantity of yarn turned off in a week of 69 hours is about 24 hanks per spindle of 30's twist. Throstle yarn is of a firm wiry quality, adapted to the warps

Digitized by Google

of fustians and other strong stuffs, as well as to the manufacture of stockings and sewing thread.

There are many modifications of the throstle system besides the one above described; the most celebrated of which are Danforth's, called the American throstle, Montgomery's, and Gore's. We must refer for an account of them to *Morris* on "*The Cotton Manufacture of Great Britain*," where they are minutely described and illustrated with accurate figures.

Fig. 617 is a view of one of the most improved forms of the throstle frame by Messrs. Hetherington and Sons, Manchester.

Mule-spinning.—The general principles of the mule have been already stated. This machine is so named because it is the offspring, so to speak, of two older machines, the jenny and the water-frame. A mule is mounted with from 240 to 1000 spindles, and spins of course as many threads.

Fig. 618 represents the original *jenny* of Hargreaves, by which one person was enabled to spin from 16 to 40 threads at once. The soft cords of rovings wound in double conical cops upon skewers were placed in the inclined frame at C; the spindles for first twisting and then winding-on the spun yarn were set upright in steps and bushes at A, being furnished near their lower ends with whorls, and endless cords, which were driven by passing round the long-revolving drum of tin plate, E. D is the clasp or clove, having a handle for lifting its upper jaw a little way, in order to allow a few inches of the soft roving to be introduced. The compound clove D being now pushed forward upon its friction wheels to A, was next gradually drawn backward, while the spindles were made to revolve with proper speed by the right hand of the operative turning the flywheel B. Whenever one *stretch* was thereby spun, the clove frame was slid home towards A; the spindles being simultaneously whirled slowly to take up the yarn, which was laid on in a conical cop by the due depression of the faller wire at A, with the spinner's left hand.

618

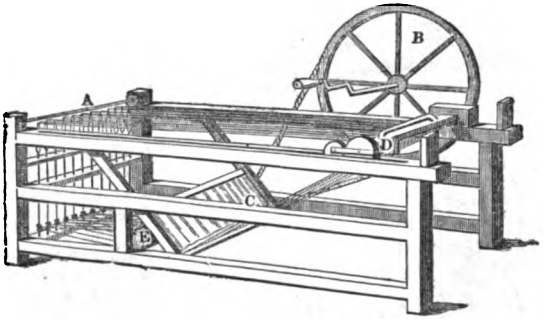

Fig. 619 is a diagram of Arkwright's original *water-frame* spinning machine, called afterwards the *water twist frame.* The rovings mounted upon bobbins in the creel A A, have their ends led through between the three sets of twin rollers below B B, thence down through the eyelet hooks upon the end of the flyers of the spindles C, and finally attached to their bobbins. The spindles being driven

619

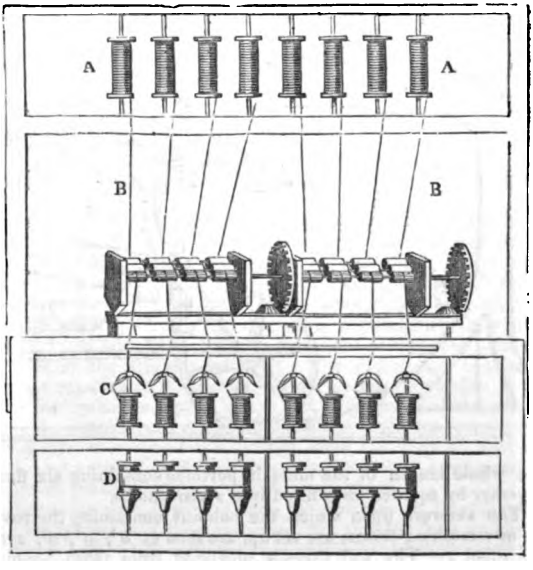

Digitized by Google

by the band D D upon their lower part, continuously twist and wind the finished yarn upon the bobbins; constituting the first unremitting automatic machine for spinning which the world ever saw.

Contrast with the above admirable system, the primitive cotton wheel of India, as represented in the annexed figure, 620. By the aid of mechanical fingers, one Englishman at his mule can turn off daily more yarn and of far finer quality than 200 of the most diligent spinsters of Hindostan.

620

Fig. 621 is a transverse section of the mule, in which its principal parts are shown.

The machine consists of two main parts; a fixed one corresponding in some measure to the water frame or throstle, and a movable one corresponding to the jenny. The first contains in a suitable frame the drawing roller-beam and the chief moving machinery; the second is called the carriage, in which the remainder of the moving mechanism and the spindles are mounted.

The frame of the fixed part consists of two upright sides, and two or more intermediate parallel bearings, upon which the horizontal roller beam *a*, the basis of the drawing rollers is supported. *b, c, d* are the three ranges of fluted iron rollers; *e, f, g* are the upper iron rollers covered with leather; *h*, the wooden wiper-rollers covered with flannel, which being occasionally rubbed with chalk, imparts some of it to the pressure rollers beneath, so as to prevent the cotton filaments adhering to them. The rollers are made throughout

621

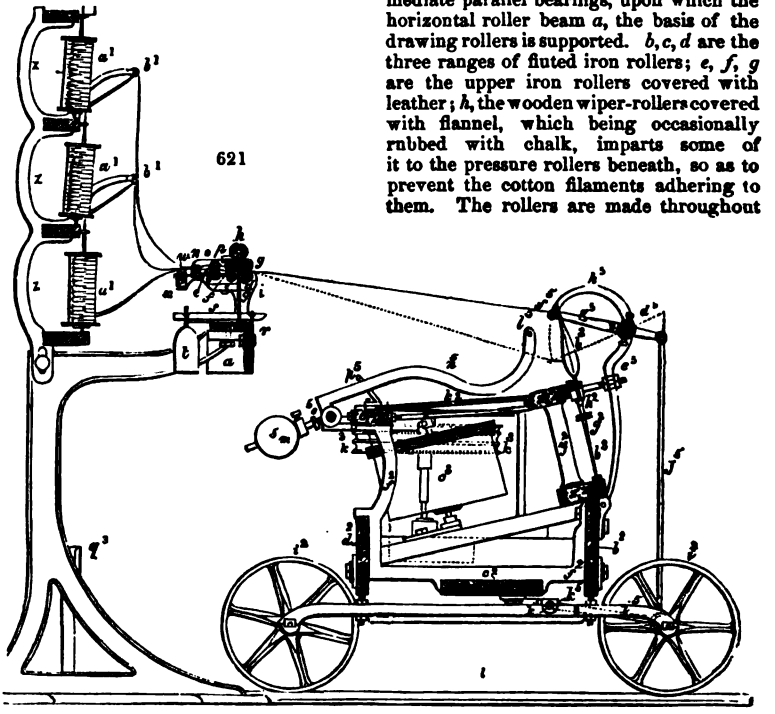

the whole length of the mule in portions containing six flutings, which are coupled together by squared ends fitted into square holes.

The skewers upon which the bobbins containing the rovings from the bobbin and fly or stretching frame, are set up, are seen at a^1, a^1, a^1, arranged in three rows in the creel *z*. The soft threads unwound from these bobbins, in their way to the drawing rollers, pass first through eyelets in the ends of the wire arms b^1, then through the rings or eyes of the guide bar *w*, and enter between the back pair of rollers. The

Digitized by Google

number of these bobbins is equal to the number of spindles in the mule, and twice as great as the number of fluted portions of the rollers; for two threads are assigned to each portion.

The carriage consists of two cast-iron side pieces, and several cast-iron intermediate similar pieces, such as f^3, which altogether are made fast to the planks b^3, c^3, d^3. The top is covered in with the plank k^3. The carriage runs by means of its cast-iron grooved wheels, upon the cast-iron railway l, which is fixed level on the floor.

The spindles stand upon the carriage in a frame, which consists of two slant rails x^3, x^3, connected by two slender rods y^3, and which frame may be set more or less obliquely. The lower rail carries the brass steps for the points of the spindles b^3; upon the upper rail brass slips are fixed pierced with holes through which the tops of the spindles play. The spindles are as usual made of steel, perfectly straight, turned truly round, and are all arranged in one plane. To each of them a small wooden or cast-iron whorl g^3 is made fast. They are distributed into groups of 24, and the whorls are arranged at such different heights, that only two of them in each group are upon a level with each other. A small brass head h^3, which every spindle has beneath the upper slant rail of the frame x^3, prevents their sitting down into the step during their rotation, or sliding off their cop of yarn.

c^3 are drums, mounted in the carriage in a plane at right angles to the plane in which the spindles are placed. At top they have a double groove for a cord to run in, and the motion which they receive from the great fly wheel, or rim of the mule (not visible in this view) they impart to the spindles. Such a drum is assigned to every 24 spindles; and therefore a mule of 480 spindles contains 20 drums. In the middle of the carriage is seen the horizontal pulley k^3, furnished with three grooves which stands in a line with the drums c^3.

The motion is given to the drums c^3, upon the right hand half of the carriage, by a single endless band or cord which proceeds from the middle groove of the pulley k^3. The rotation of the spindles is produced by a slender cord, of which there are 12 upon each drum c^3; because every such cord goes round the drum, and also every two wharves which stand at the same level upon the spindles. It is obvious that the drums, and consequently the spindles, must continue to revolve as long as the main rim of the mule is turned, whether the carriage be at rest or in motion upon its railway.

If we suppose the carriage to be run in to its standing point, or to be pushed home to the spot from which it starts in spinning, its back plant d^3 will strike the post q^3 upon the fixed frame, and the points of the spindles will be close in front of the roller beam. The rollers now begin to turn and to deliver threads, which receive immediately a portion of their twist from the spindles; the carriage retires from the roller beam with somewhat greater speed than the surface speed of the front rollers, whereby the threads receive a certain degree of stretching, which affects most their thicker and less twisted portions and thereby contributes greatly to the levelness of the yarn. When the carriage has run out to the end of its course, or has completed a stretch, the fluted rollers suddenly cease to revolve (and sometimes even beforehand, when a second stretch is to be made), but the spindles continue to whirl till the fully extended threads have received the proper second or after-twist. Then the carriage must be put up, or run back towards the rollers, and the threads must be wound upon the spindles.

This is the order of movements which belong to the mule. It has been shown how the rotation of the spindles is produced.

For winding-on the yarn the carriage has a peculiar apparatus, which we shall now describe. In front of it, through the whole extent to the right hand as well as the left, a slender iron rod, d^3, runs horizontally along, in a line somewhat higher than the middle of the coping portion of the spindles, and is supported by several props, such as e^3. Upon each end of the two rods, d^3, there is an arm, g^3; and betwixt these arms an iron wire, called the copping wire, f^3, is stretched, parallel with the rod d^3. For the support of this wire, there are several slender bent arms h^3 extended from the rod d^3 at several points betwixt the straight arms g^3. The rod d^3 has, besides, a wooden handle at the place opposite to where the spinner stands, by which it can be readily grasped This movement is applied at the left division of the machine, and it is communicated to the right by an apparatus which resembles a crane's bill. The two arms, y^3, in the middle of the machine, project over the rods d^3, and are connected by hinges with two vertical rods j^3, which hang together downwards in like manner with two arms i^3, proceeding from a horizontal axis k^3.

By means of that apparatus the yarn is wound upon the spindles in the following manner. As long as the stretching and twisting go on, the threads form an obtuse angle with the spindles, and thereby slide continually over their smooth rounded tips during their revolution, without the possibility of coiling upon them. When, however, the spinning process is completed, the spinner seizes the carriage with his left hand and pushes it back towards the roller beam, while with his right hand he turns

Digitized by Google

round the handle of the rim or fly wheel, and consequently the spindles. At the same time, by means of the handle upon the rod d^3, he moves the copping-wire f^3, so that it presses down all the threads at once, and places them in a direction nearly perpendicular to the spindles; as shown by the dotted line y^3. That this movement of the copping wire, however, may take place without injury to the yarn, it is necessary to turn the rim beforehand a little in the opposite direction, so that the threads may get uncoiled from the upper part of the spindles, and become slack; an operation called in technical language the *backing off*. The range upon which the threads should be wound, in order to form a conical cop upon the spindle, is hit by depressing the copping wire to various angles, nicely graduated by an experienced eye. This faller wire alone is not, however, sufficient for the purpose of winding-on a seemly cop, as there are always some loose threads which it cannot reach without breaking others.

Another wire called the *counter-faller*, f^3, must be applied under the threads. It may be raised to an elevation limited by the angular piece p^3; and is counterpoised by a very light weight m^3, applied through the bent lever n^3, which turns upon the fulcrum b^3. This wire, which applies but a gentle pressure, gives tension to all the threads, and brings them regularly into the height and range of the faller f^3. This wire must be raised once more, whenever the carriage approaches the roller beam. At this instant a new stretch commences; the rollers begin again to revolve, and the carriage resumes its former course. These motions are performed by the automatic machinery.

There is a little eccentric pulley mechanism for moving the guide beam to and fro with the soft yarns, as they enter between the back rollers. On the right hand end of the back roller shaft, a worm screw is formed which works into the oblique teeth of a pinion attached to the end of the guide beam, in which there is a series of holes for the passage of the threads, two threads being assigned to each fluted roller. In the flat disc of the pinion, an eccentric pin stands up which takes into the jointed lever upon the end of the guide beam, and as it revolves, pushes that beam alternately to the left and the right by a space equal to its eccentricity. This motion is exceedingly slow, since for each revolution of the back roller, the pinion advances only by one tooth out of the 33 which are cut in its circumference.

After counting the number of teeth in the different wheels and pinions of the mule, or measuring their relative diameters, it is easy to compute the extension and twist of the yarns; and when the last fineness is given to ascertain their marketable value. Let the ratio of speed between the three drawing rollers be $1 : 1\frac{3}{13} : 7\frac{1}{2}$; and the diameter of the back and middle roller three quarters of an inch: that of the front roller one inch; in which case the drawing is thereby increased $1\frac{1}{3}$ times, and $7\frac{1}{2} \times 1\frac{1}{3} = 10$. If the rovings in the creel bobbins have been No. 4, the yarn, after passing through the rollers, will be No. 40. By altering the change pinion (not visible in this view) the fineness may be changed within certain limits, by altering the relative speed of the rollers. For one revolution of the great rim or fly wheel of the mule, the front roller makes about 6-tenths of a turn, and delivers therefore 22·6 lines or 12ths of an inch of yarn, which, in consequence of the tenfold draught through the rollers, corresponds to 2·26 lines of roving fed in at the back rollers. The spindles or their whorls make about 66 revolutions for one turn of the rim. The pulleys or grooved wheels on which the carriage runs, perform 0·107 part of a turn while the rim makes one revolution, and move the carriage 24·1 lines upon its rails, the wheels being 6 inches in diameter.

The 22·6 lines of soft yarn delivered by the front rollers, will be stretched $1\frac{1}{2}$ lines by the carriage advancing 24·1 lines in the same time. Let the length of the railway, or of each stretch be 5 feet, the carriage will complete its course after 30 revolutions of the rim wheel, and the 5 feet length of yarn (of which $56\frac{1}{2}$ inches issue from the drawing rollers, and $3\frac{1}{2}$ inches proceed from the stretching) is, by the simultaneous whirling of the spindles, twisted 1980 times, being at the rate of 33 twists for every inch. The second twist, which the threads receive after the carriage has come to repose, is regulated according to the quality of the cotton wool, and the purpose for which the yarn is spun. For warp yarn of No. 40 or 50, for example, 6 or 8 turns of the rim wheel, that is, from 396 to 528 whirls of the spindles for the whole stretch, therefore from 7 to 9 twists per inch, will be sufficient. The finished yarn thus receives from 40 to 42 twists per inch.

One spinner attends to two mules, which face each other, so that he needs merely turn round in the spot where he stands, to find himself in the proper position for the other mule. For this reason the rim wheel and handle, by which he operates, are not placed in the middle of the length of the machine, but about two-fifths of the spindles are to the right hand and three-fifths to the left; the rim wheel being towards his right hand. The carriage of the one mule is in the act of going out and spinning, while that of the other is finishing its twist, and being put up by the spinner.

The quantity of yarn manufactured by a mule in a given time, depends directly

Digitized by Google

upon the number of the spindles, and upon the time taken to complete every stretch of the carriage. Many circumstances have an indirect influence upon that quantity, and particularly the degree of skill possessed by the spinner. The better the machine, the steadier and softer all its parts revolve, the better and more abundant is its production. When the toothed wheels do not work truly into their pinions, when the spindles shake in their bushes, or are not accurately made, many threads break, and the work is much injured and retarded. The better the staple of the cotton wool, and the more careful has been its preparation in the carding, drawing, and roving processes, the more easy and excellent the spinning will become: warmth, dryness, cold, and moisture have great influence on the ductility, so to speak, of cotton. A temperature of 65° F., with an atmosphere not too arid, is found most suitable to the operations of a spinning mill. The finer the yarn, the slower is the spinning. For numbers from 20 to 36, from 2 to 3 stretches of warp may be made in a minute, and nearly 3 stretches of weft; for numbers above 50 up to 100, about 2 stretches; and for numbers from 100 to 150 one stretch in the minute. Still finer yarns are spun more slowly, which is not wonderful, since in the fine spinning mills of England, the mules usually contain upwards of 500 spindles each, in order that one operative may manage a great number of them, and thereby earn such high wages as shall fully remunerate his assiduity and skill.

In spinning fine numbers, the second speed is given before the carriage is run out to the end of its railway; during which course of about 6 inches, it is made to move very slowly. This is called the second stretch, and is of use in making the yarn level by drawing down the thicker parts of it, which take on the twist less readily than the thinner, and therefore remain soft and more extensible. The stretch may therefore be divided into three stages. The carriage first moves steadily out for about 4 feet, while the drawing rollers and spindles are in full play; now the rollers stop, but the spindles go on whirling with accelerated speed, and the carriage advances slowly, about 6 inches more; then it also comes to rest, while the spindles continue to revolve for a little longer, to give the final degree of twist. The acceleration of the spindles in the second and third stages, which has no other object but to save time, is effected by a mechanism called the *counter*, which shifts the driving band, at the proper time, upon the loose pulley, and, moreover, a second band, which had, till now, lain upon its loose pulley, upon a small driving pulley of the rim-shaft. At length, both bands are shifted upon their loose pulleys, and the mule comes to a state of quiescence.

The SELF-ACTING MULE, or the IRON MAN, as it has been called in Lancashire, is an invention to which the combinations among the operative spinners obliged the masters to have recourse. It now spins good yarn up to 40's with great uniformity and promptitude, and requires only juvenile hands to conduct it, to piece the broken yarns, to replace the bobbins of rovings in the creel, and to remove the finished cops from the spindles.

The self-acting mules were first constructed, we believe, by Messrs. Eaton, formerly of Manchester, who mounted ten or twelve of them in that town, four at Wiln, in Derbyshire, and a few in France. From their great complexity and small productiveness, the whole were soon relinquished, except those at Wiln. M. de Jong obtained two patents for self-acting mules, and put twelve of them in operation in a mill at Warrington, of which he was part proprietor; but with an unsuccessful result.

The first approximation to a successful accomplishment of the objects in view, was an invention of a self-acting mule, by Mr. Roberts, of Manchester; one of the principal points of which was the mode of governing the winding-on of the yarn into the form of a cop; the entire novelty and great ingenuity of which invention was universally admitted, and proved the main step to the final accomplishment of what had so long been a desideratum. For this invention a patent was obtained in 1825, and several headstocks upon the principle were made, which are still working successfully.

In 1830, Mr. Roberts obtained a patent for the invention of certain improvements; and by a combination of both his inventions, he produced a self-acting mule, which is generally admitted to have exceeded the most sanguine expectations, and which has been extensively adopted. There are, probably, at present, upwards of half a million of spindles of Messrs. Sharp, Roberts, and Co.'s construction, at work in the United Kingdom, and giving great satisfaction to their possessors. The advantages of these self-actors are the following: —

The saving of a spinner's wages to each pair of mules, piecers only being required, as one overlooker is sufficient to manage six or eight pairs of mules. The production of a greater quantity of yarn, in the ratio from 15 to 20 per cent. The yarn possesses a more uniform degree of twist, and is not liable to be strained during the spinning, or in winding-on, to form the cop; consequently fewer threads are broken in these processes, and the yarn from having fewer piecings is more regular.

Digitized by Google

The cops are made firmer, of better shape, and with undeviating uniformity; and, from being more regularly and firmly wound, contain from one third to one half more yarn than cops of equal bulk wound by hand; they are consequently less liable to injury in packing or in carriage, and the expense of packages and freight (when charged by measurement) is considerably reduced.

From the cops being more regularly and firmly wound, combined with their superior formation, the yarn intended for warps less frequently breaks in winding or reeling, consequently there is a considerable saving of waste in those processes.

Secondly, the advantages connected with weaving.

The cops being more regularly and firmly wound, the yarn, when used as weft, seldom breaks in weaving; and as the cops also contain a greater quantity of weft, there are fewer bottoms, consequently there is a very material saving of waste in the process of weaving.

From those combined circumstances, the quality of the cloth is improved, by being more free from defects caused by the breakage of the warp or weft, as well as the selvages being more regular.

The looms can also be worked at greater speed; and, from there being fewer stoppages, a greater quantity of cloth may be produced.

That the advantages thus enumerated, as derivable from the use of self-acting mules, have not been overrated, but, in many instances, have been considerably exceeded, I have, by extensive personal inquiry and observation, had ample opportunity of ascertaining.

Statement of the quantity of yarn produced on Messrs. Sharp, Roberts, and Co.'s self-acting mules, in twelve working hours, including the usual stoppages connected with spinning, estimated on the average of upwards of twenty mills:—

No. of Yarn.	No. of Twist.	No. of Weft.
16	4¼ hanks	4⅞ hanks per spindle.
24	4¼ —	4⅝ —
32	4 —	4⅜ —
40	3¾ —	4⅛ —

Of the intermediate numbers the quantities are proportionate.

The following are particulars of the results of trials made by Messrs. Sharp, Roberts, and Co., at various mills, to ascertain the comparative power required to work self-acting mules, in reference to hand-mules, during the spinning, up to the period of backing-off:—

At what Mill, and the Description of Mule.	No. and kind of Yarn.	Diameter of Pulley or Rim Wheel.	Revolutions of Pulley or Rim Wheel.	Required Force for Motion.	Total Force Employed in Spinning.
Messrs. Birley and Kirk.	*Weft.*	*Ins.*		*lbs.*	*lbs.*
Self-acting mule, 360 sps. -	30 to 34	12	58	30	5463
* Hand mule, 180 sps. -	ditto	15	36	26	3669 × 2 = 7338
Messrs. Leech and Vandrey.	*Twist.*				
† Self-acting mule, 324 sps.	36	12	70	36	7912
Hand mules, 324 sps. -	36	29	58	16½	7273
Messrs. Duckworth & Co.	*Twist.*				
Self-acting mule, 324 sps.	40	12	62	33	6421
Hand-mule, 324 sps. -	40	47	36	15½	6645

The mode adopted to make the trials was as follows, viz.:

A force, indicated by weight in pounds, was applied to the strap working upon the driving-pulley of the respective mules, sufficient to maintain the motion of the mule whilst spinning, which weight, being multiplied by the length of strap delivered by each revolution of the pulley, and again by the number of revolutions made by the pulley whilst spinning, gave the total force in pounds applied to the respective mules whilst spinning; for instance, suppose a mule to be driven by a pulley 12 inches diameter (3·14 ft. in circumference), such pulley making 58 revolutions during the spinning as above, and that it required a force equal to 30 lbs. weight to maintain the motion of the mule, then 33 lbs. × 3·13 feet circumference of pulley × 58 revolutions in spinning = 5·463 lbs. of force employed during the spinning, to the period of backing-off.

Mr. James Smith, of Deanstone cotton works in Scotland, obtained a patent for the

* The trial was disadvantageous for the hand mules, being two for 360 spindles.

† The trial was disadvantageous for the self-acting mules, being driven by a very short and light vertical strap, the hand-mule having a long horizontal strap.

Digitized by Google

invention of a *self-actor*, in February, 1834. He did not perform the backing-off by reversing the rotation of the spindle, as in common mules, or as in Mr. Roberts's, but by elevating the counterfaller wire, which, being below the ends of the yarn or thread, along the whole extent of the carriage, thereby pulls off or strips the spiral coils at the point of the spindle, instead of unwinding them, as of old. This movement he considered to be of great importance towards simplifying the machinery for rendering the mule self-acting; and the particular way in which he brought the stripper into action is no doubt ingenious, but it has been supposed by many to strain the yarn. He claimed as his invention the application and adaptation of a mangle wheel or mangle rack to the mule, for effecting certain successive movements, either separately or in conjunction; he claimed that arrangement of the carriages of a pair of mules, by which the stretch is caused to take place over part of the same ground by both carriages, and thereby the space required for the working of the pair of mules is greatly diminished; and he also claimed the application of a weight spring, or friction, for balancing the tension of the ends of the threads.

A patent was granted, in April, 1835, to Mr. Joseph Whitworth, engineer in Manchester, for some ingenious modifications of the mechanism of the mule, subservient to automatic purposes. His machinery is designed, first, to traverse the carriage in and out, by means of screws or worm-shafts, which are placed so as to keep the carriage parallel to the drawing rollers, and prevent the necessity of squaring bands, hitherto universally employed; secondly, his invention consists in an improved manner of working the drums of a self-acting mule by gear; thirdly, in the means of effecting the backing-off; fourthly, in the mechanism for working the faller-wire in building the cops; and fifthly, in the apparatus for effecting the winding of the yarns upon the spindles. As regards the throstles and doubling frames, his improvements apply, first, to the peculiar method of constructing and adapting the flyers and spindles, and producing the drag; and, secondly, to the arrangement of the other parts of the doubling machinery.

The Self-acting Mule. – In a previous edition of this work mention was made of the patent self-acting mules of Mr. Roberts, of Manchester, and of Mr. Smith, of Deanstone. Since the period when that notice was written a great number of patents have been obtained for improvements on the original patents, by Mr. Potter, of Manchester, Messrs. Higgins and Whitworth, of Salford, Mr. Montgomery, of Johnstone, Messrs. Craig and Sharp, of Glasgow, and many others.

Mr. Roberts's self-acting mule, which was practically the first introduced, has maintained its ground against all competitors, and is still the mule which is most extensively used and approved in the cotton trade.

As might be expected, it has undergone a variety of improvements and alterations by the various machine workers who have made it since the expiration of the patent, but by none more than by Messrs. Parr, Curtis, & Madely, of Manchester, who have devoted a large amount of time and expense in its perfection.

They are the proprietors of six patents for this mule, the invention of Mr. Curtis, of the manager Mr. Lakin, and of Messrs. Rhodes & Wain, the combination of which has enabled that firm to produce a very superior self-acting mule, and given them a decided lead as makers.

The following are some of the principal improvements they have effected: viz., substituting a catch box with an eccentric box, in lieu of a cam shaft, to produce the required changes; an improved arrangement of the faller motion, which causes the fallers to act more easily upon the yarn, and not producing a recoil in them when the "backing-off" takes place, thus preventing "snarls" and injury to the yarn; in applying a spiral spring for the purpose of bringing the backing-off cones into contact, by which the operation of "backing-off" can be performed with the greatest precision. The backing-off movement is also made to stop itself, and to cause the change to be made which affects the putting-up of the carriage, which it does in less time than if an independent motion was employed. They have also an arrangement for driving the back, or drawing-out, shaft by gearing in such a manner that in the event of an obstruction coming in the way of the carriage going out, the motion ceases and prevents the mule being injured.

By means of a friction motion, the object of which is to take the carriage in to the rollers, the carriage will at once stop in the event of any obstruction presenting itself. For the want of an arrangement of this nature, lives have been lost and limbs injured, when careless boys have been cleaning the carriage whilst in motion, and have been caught between it and the roller beam, and thus killed or injured.

Another improvement consists in connecting the drawing-out shaft and the quadrant pinion shaft by gearing, instead of by hands, thereby producing a more perfect winding-on, as the quadrant is moved the same distance at each stretch of the carriage. They have also made a different arrangement of the headstock — or self-

Digitized by Google

acting portion of the mule—causing its height to be much reduced, which makes it more steady, offers less obstruction to the light, enables the spinner to see all the spindles from any part of the mule, and allows a larger driving strap, or belt, to be used, which in low rooms is of considerable importance. The result of these various improvements is the production of one of the most perfect spinning machines now in the trade.

For spinning very coarse numbers, say 6's, they have patented an arrangement, by which the rotation of the spindles can be stopped, and the operation of backing-off performed, during the going out of the carriage, thus effecting a considerable saving of time.

622

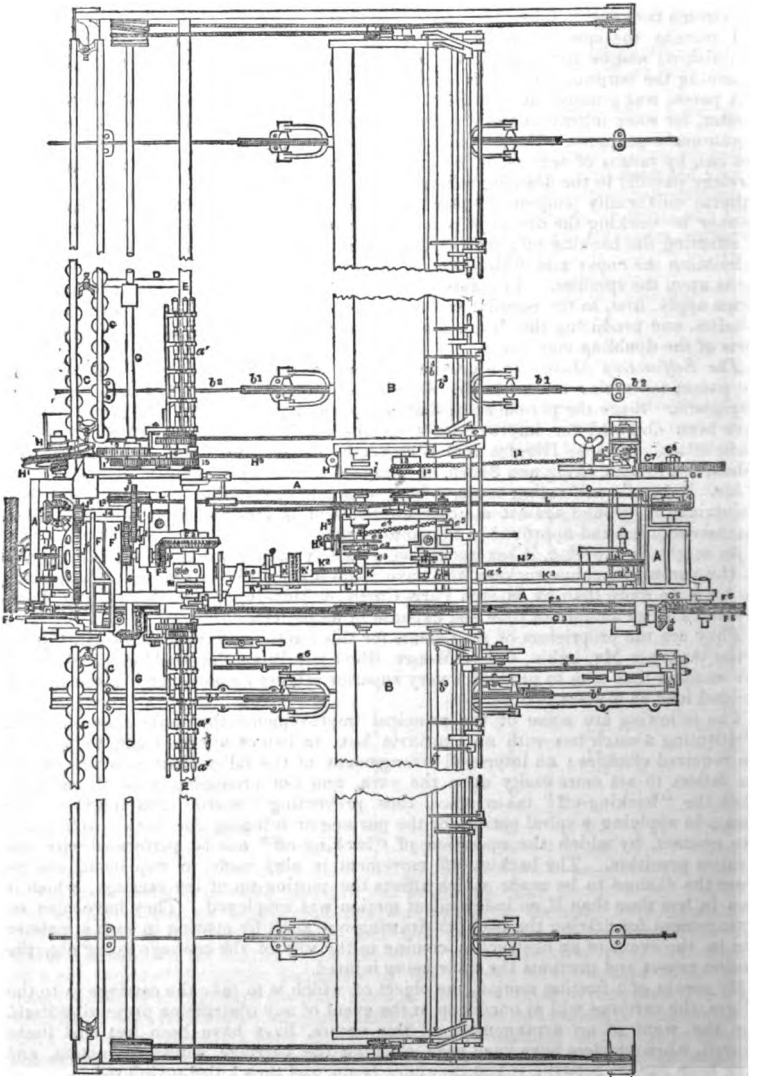

Some of their mules are working in the mills of Messrs. Thomas Mason & Son, Ashton-under-Lyne, and are making five to five and a half draws per minute, the length of the stretch being 67 inches; a speed and length of stretch never previously attained.

Digitized by Google

The following is a description of one of those excellent mules:—

Fig. 622 is a plan view, *fig.* 623 a tranverse section, and *fig.* 624 an end view of so much of a mule as is requisite for its illustration here.

623

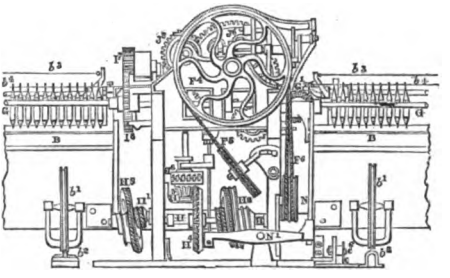

As there are many parts which are common to all mules, most of which have been previously described in the notice of the hand mule, we shall therefore only notice the more prominent portions of the self-acting part of the mule. Among such parts are, the framing of the headstock A; the carriage B; the rovings C; the supports D,

624

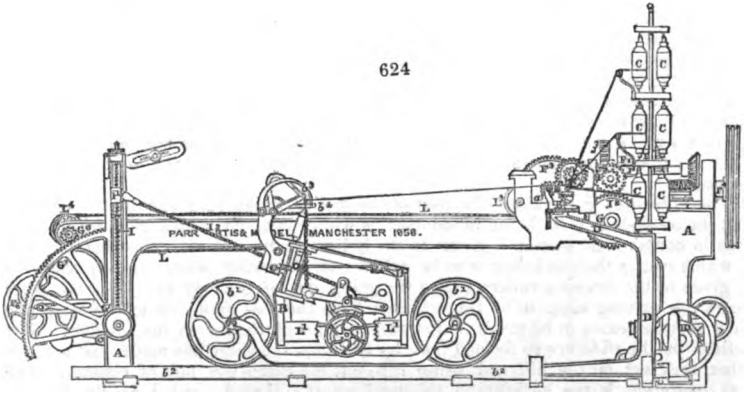

of the roller beam E; the fluted rollers a; the top rollers a^1; the spindles b; the carriage wheels b^1; the slips, or rails, b^2, on which they move; the faller wire b^3; the counter-faller wire b^4. The following are the parts chiefly connected with the self-acting portion of the mule. The fast pulley F, the loose pulley F^1, the bevels F^2 and F^3, which give motion to the fluted rollers: the back, or drawing-out shaft G, wheels G^1 and G^2, by which through the shaft G^3 and wheels G^4 and G^5, motion is communicated to the pinion G^6 on the shaft G^8, and thence to the quadrant G^7. The scroll shaft H, the scrolls H^1 and H^2, the catch box H^3, for giving motion through the bevel wheels H^3 and H^4 to the scroll shaft. Drawing-in cord H^5. Screw in radial arm I, nut on same I^1, winding-on chain I^2, winding-on band I^3, drawing-out cord I^4. Pinion I^5 on front roller shaft, to give motion through the wheels I^6, I^7, and I^8, to drawing-out shaft G. Pinion J, and wheels J^1, J^2, and J^3 for giving motion to shaft J^4, pinion J^5, giving motion to backing-off wheel J^6. On the change shaft K is keyed a pinion which gears with the wheel J^6, and receives motion therefrom. One half of the catch-box K^1 is fast to one end of a long hollow shaft on which are two cams, one of which is used to put the front drawing roller catch-box M into and out of contact, the other is used for the purpose of traversing the driving strap on or off the fast-pulley F as required. The other half of the catch-box K^1 is placed on the shaft K, a key fast on which passes through the boss of the catch-box, and causes it to be carried round by the shaft as it rotates. Though carried round with the shaft, it is at liberty to move lengthwise, so as to allow it to be put into and out of contact with the other half when required. The spiral spring K^2 is also placed on the shaft K, and continually bears against the end of the catch-box next to it, and endeavours to put it in contact with the other, which it does when per-

Digitized by Google

mitted and the changes are required, The change lever K³ moves on a stud which passes through its boss a^2: near which end of this lever are the adjustable pieces a. When the machine is put in motion, supposing the carriage to be coming out, the driving strap is for the most part on the fast pulley F when motion is given through the bevel wheels F² and F³ to the drawing rollers a, which will then draw the rovings C off the bobbins, and deliver the slivers so drawn at the front of the rollers, and the same being fast to the spindles, as the carriage is drawn out the slivers are taken out also, and as the spindles at this time are turned round at a quick rate (say 6,000 revolutions per minute), they give twist to the slivers and convert them into yarn or twisted threads. Motion is communicated to the spindles from the rim pulley F⁴, through the rim band F⁵, which passes from the rim pulley to a grooved pulley on the tin roller shaft, round which it passes and thence round the grooved pulley F⁶ back to the rim pulley, thus forming an endless band. It will be seen that the rim band pulley and the other pulleys, over or round which the rim band passes, are formed with double grooves, and the band being passed round each, it forms a double band, which is found of great advantage, as it will work with a slacker band than if only one groove was used; there is consequently less strain on the band, and it is longer. A string or cord passes round the tin roller to a wharve on each spindle, round which it passes, and thence back to the tin roller, and thus, when the tin roller receives motion from the rim band, it gives motion to the spindles. The carriage is caused to move outwards by means of the cord L, one end of which is attached to a ratchet pulley fixed on the carriage cross, or square L¹, and is then passed over the spiral grooved pulley L² fast on the drawing out shaft G, and passes thence under the guide pulley L³ round the pulley L⁴ to another ratchet pulley, also on the carriage square where the other end is then fastened. The cord receives motion from the pulley L², round which it passes and communicates the motion it receives to the carriage, the carriage wheels b^1 moving freely on the slips b^2.

When the carriage has completed its outward run, the bowl a^4 on the counter faller shaft comes against the piece a^5, depresses it and the end of the lever K² to which it is attached, and raises the other end, and with it the slide c, on which are two inclines. A round pin (not seen) passes through the boss of the catch-box next to the slide, and bears against the sliding half of the catch-box, and holds it out of contact.

When the slide c is raised, the part of the incline which bore against the pin and kept the catch-box from being in contact is withdrawn, on which the spring puts them in contact, and motion is given to the hollow shaft, and the cams thereon; one of which causes the catch-box M to be taken out of contact when motion ceases to be given to the drawing rollers and to the going out of the carriage; and the other causes the driving strap to be traversed off from the fast pulley on to the loose one when motion ceases to be given to the rim pulley and thence to the spindles. The inclines on the slide are so formed that, by the time the shaft has made half a revolution, they act on the pin and cause it to put the catch-box out of contact. The next operation is the backing-off or uncoiling the threads coiled on the spindle above the cop, which is effected by causing the backing-off cones attached to the wheel J⁶ to be put into contact with one formed in the interior of the fast pulley F, when a reverse motion will be given to the rim pulley and thence to the tin roller and the spindles.

The backing-off cones are put into contact by means of a spiral spring, which, when the strap fork is moved to traverse the strap on to the loose pulley, it is allowed to do. Simultaneously with the backing-off the putting down of the faller wire takes place, which is effected through the reverse motion of the tin roller shaft, which causes the catch c^1 to take into a tooth of the ratchet wheel c^2, when they will move together, and with them the plate c^3, to a stud in which one end of the chain c^4 is fastened, the other end of which is attached to the outer end of the finger c^5, fast on the faller shaft. When this chain is drawn forward by the plate, it draws down the end of the figure c^3 to which it is attached, and thereby partially turns the faller shaft and depresses the faller wire b^3, and, at the same time, raises the lever c^5, the lower part of which bears against a bowl attached to a lever which rests on the builder rail c^6. As soon as the lever c^5 is raised sufficiently high to allow the lower end to pass over, instead of bearing against the bowl, it is drawn forward by a spiral spring, which causes the backing-off cones to be taken out of contact, when the backing-off ceases, and the operations of running the carriage in and winding the yarn on to the spindles must take place. When the cones are taken out of contact the lower end of the lever N is withdrawn from being over the top of the lever N¹, leaving that lever at liberty to turn, and the catch-box H⁶ thereupon drops into gear, and motion is communicated to the scrolls H¹ and H², and to the

Digitized by Google

cords H^6 and H^7. The cord H^6 is at one end attached to the scroll H^1, and passes thence round the pulley H^8 to the ratchet pulley H^9 fixed to the back of the carriage square. The cord H^7 is at one end attached to the scroll H^2, and passes thence round the pulley H^{10} to the ratchet pulley H^{11} fixed to the front of the carriage square. It will thus be seen that the carriage is held in one direction by one band, and in another by the other band, and that it can only be moved in either direction by the one scroll giving off as much cord as the other winds on. When the catch-box H^6 drops in gear, the scroll H^1 winds the cord H^6 on and draws the carriage in. It will thus be seen that the carriage is drawn out by means of the back or drawing-out shaft G, and is drawn in by the scroll H^1. The winding on of the thread in the form of a cop is effected by means of Mr. Roberts's ingenious application of the quadrant or radial arm G^7, screw I, and winding-on chain I^2 and band I^3. The chain I^2 is at one end attached to the nut I^1 and at the other to the band I^3. During the coming out of the carriage the drawing-out shaft through the means of the wheels G^1, G^2, G^4, and G^5, shafts G^3 and G^6, and pinion G^6, moves the quadrant which, by the time the carriage is quite out, will have been moved outwards a little past the perpendicular. The chain is wound on to the barrel by means of the cord O, which being fixed and lapped round the barrel as the carriage moves outward causes it to turn. On the barrel is a spur wheel which gears into a spur pinion on the tin roller shaft (these wheels being under the frame side are not seen in the drawing). The spur pinion is loose on the tin roller shaft, and as the carriage comes out it turns loosely thereon, but as the carriage goes in the chain I^2 turns the barrel round, and with it the spur pinion. A catch on a stud fixed in the side of the pinion, at that time taking into a tooth of the ratchet wheel *i* fast on the tin roller shaft, the motion of the spur pinion is communicated to the tin roller shaft, and thence to the spindles, causing the thread or yarn spun during the coming out of the carriage to be wound on the spindles, in the form of the cop, while the carriage goes in. At the com-

625

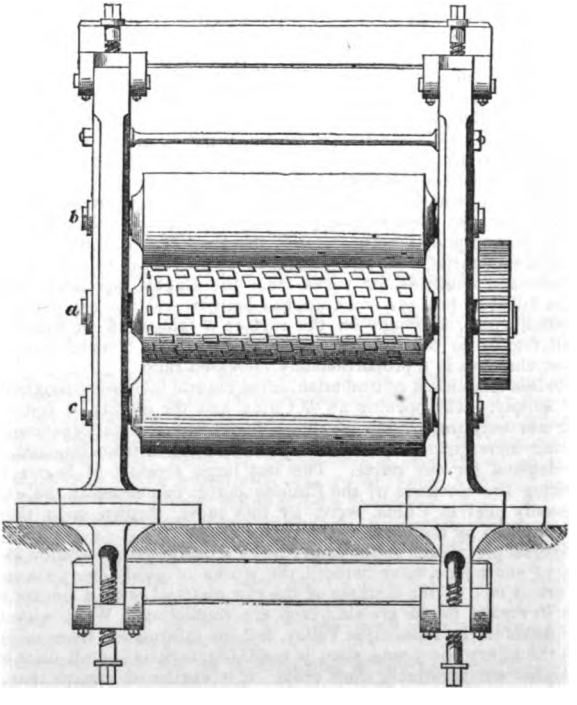

mencement of the formation of a set of cops, when the yarn is being wound on the bare spindles, the spindles require to have a greater number of turns given to them

Digitized by Google

than they do when the cop bottom is formed; to produce this variation the following means are employed. At the commencement of each set, the screw in the radial arm is turned so as to turn the nut I^1 to the bottom of the screw, where it is near to the shaft on which the quadrant moves; consequently little or no motion is given to the chain, and the carriage, as it goes in, causes the chain to be drawn off the band. As the formation of the cop bottom proceeds, the screw is turned and the nut is raised; by which means a less quantity of chain is drawn off the barrel; the chain, at the point of attachment gradually following the carriage as it goes in.

During the going in of the carriage the quadrant is drawn down or made to follow the carriage by the chain pulling it, the speed at which it is allowed to descend is regulated by the motion of the carriage; the quadrant, during the going in of the carriage, through the pinion G^6, shafts G^3 and G^5, and wheels, G^1, G^2, G^4, and G^3 driving the drawing-out shaft.

When the carriage has completed its inward run, the bowl A^4 comes in contact with the piece A^6, and depresses it and the end of the lever K^2 to which it is attached, and also the slide C, which then allows the catch box K^1 to be put in contact, and causes the cam shaft to make another half revolution. During this half revolution of the cam shaft, the cams cause the catch box M to be put in contact, and the driving strap to be traversed on to the fast pulley, and, by the latter movement, the catch box H^6 is taken out of gear and the winding-in motion of the scrolls ceases, and the carriage will again commence its outward run, and with it the spinning of the thread.

Fig. 625 is a view of a beetling machine, made by Mr Jackson, of Bolton, for the firm of Messrs. Bridson, Son, and Co., of that town. A is the beetling roller, and B, C, are the rolls of cloth which are to receive the peculiar finish, which beetling alone can give to cotton cloths.

Although this is a very simple machine, yet it is questionable if it or any other modern invention can effectually take the place of the old fashioned but useful upright wooden beetle.

COTTON TRADE. The following extracts from the circular of Messrs. Learing & Co. present so complete a view of the state of the cotton trade, that they continue to be of much interest and importance:—

"Mobile, September 1st, 1858.

"The close of the commercial year, ending the 31st of August, gives the total receipt of cotton at all the American ports as 3,113,962 bales, against 2,939,679 bales of the year previous. Of the past year's receipts England took 1,809,966 bales, the rest of Europe 780,489 bales, while the United States bought 595,562 bales. This shows an increase to Great Britain, a falling off in the exportations to the Continent and other parts, and a diminished consumption in the United States.

"It is important to remark, that this falling off in the exportation to the Continent of Europe, and also the home consumption, does not necessarily involve any actual diminution in consumption; because, what the Continent of Europe failed to take direct of the raw material, will be represented by increased re-exports from Liverpool, and increased demands for yarns from the English spinner; and what the United States failed to buy and work up, has been bought and will be worked up by others. Consequently, although on the surface a falling off in consumption may appear as in regard to the Continent and America, the demand will be supplied through other channels in a proportionately increased ratio.

"Added to this established consumption, is the natural increase throughout the world in excess of supply. The opening up of China, and the mutiny in India, which, by interrupting not only the growth of cotton there, but also the weaving industry of the natives, has increased the demand for yarns and cloths from England, conspire to add to the demand for our staple. The last large receipts of Surats from India occurred during the blockade of the Chinese ports; consequently the exports from Bombay, usually sent to China, were, by this cause, thrown upon the Liverpool market, induced also by the attraction of high prices.

"The universal prevalence of the panic, the long continued prostration in trade, and the working of short time, have reduced the stocks of goods everywhere; and this special feature is met in the markets of the raw material with a similar exhaustion. The reports in regard to the growing crop are conflicting. What with the certain effect of the floods in the Mississippi Valley, and the information from various sources in regard to the injury the young plant is receiving, serious apprehensions are entertained of another comparatively short crop. It is worthy of remark that conflicting interests generally take opposite views in regard to the future prospects of the growing crop. The hopes and apprehensions of the buyer and seller, combined with the natural disposition to embrace that view which is dictated by self-interest, must continue to characterise all the reports upon cotton, either from Europe or this side.

Digitized by Google

But it is well for our European friends to have clearly before them the utmost cotton crop America can yield under the best possible conditions embraced in a wide area under cultivation, an early spring, a good stand in the field, a propitious summer, and a favourable autumn. Accepting these rare conditions as embraced within any one year, it is simply impossible for the United States to produce for commercial purposes, with the present supply of labour, beyond a certain amount of cotton. As the best standard by which to arrive at this capacity for 'utmost production' in America, we select the year 1855–56. The commercial crop that season was 3,527,845 bales, from which must be deducted for cotton remaining over from the year previous, on hand in the interior, or in stock on the sea-board, say 250,000 bales. This leaves as the 'actual' or 'new' crop of 1855–56 the reduced amount of 3,277,845 bales. The season here taken, will be remembered as the most favourable ever known to a large production. It was also stimulated in its growth by previously ruling high prices. Accepting as correct the generally received data that the negro labour force in the cotton states increases at the rate of five per cent. per annum, would give fifteen per cent. increase for the three years, from 1856 to 1858–59. This increase of labour thrown into the cotton yield would seem to indicate 3,760,000 bales (more or less) as the utmost possible capacity of production for the year ending 1st September, 1859. In explanation, it is worthy of remark that the increase upon the increase, which we have not estimated, in the three years, would make the production even larger. Yet we see in the succeeding years a falling off from the production of 1855–56 instead of an advance. The total commercial crop of 1856–57 was only 2,939,519 bales, while the season just closed gives the limited yield of 3,113,962 bales.

"The production of cotton in America is not therefore limited by soil. It is a question of labour, the negroes being almost exclusively the producers. Now a negro can only 'pick' so many pounds of cotton a day, and no more. There is a certain number of negroes; and these cannot be added to otherwise than by the natural increase of population already estimated. They cannot be increased by immigration. The cotton picking season—that is, the cotton harvest—cannot extend beyond a certain number of days. Estimating, therefore, the largest number of negro labourers, the greatest amount of cotton per day to the hand, and the longest possible extension of the harvest or picking season, and we have the utmost possible production of the new crop. As before stated the cotton year of 1855–56 presented all these favourable characteristics. Since then, the crop has been reduced in exact proportion as either of these features were affected. In illustration, the following statement is instructive.

"In 1844 the first receipt of 'new Cotton' on the sea board was on the 23rd of July, the receipts at New Orleans on the 1st of September being 5,720 bales. The crop that year was considered large, being 2,394,503 bales.

"In 1846 the first receipt of 'new cotton' was on the 7th of August, and the receipts at New Orleans on the 1st of September only 140 bales! Here notice the falling off in the total crop that year, the same being only 1,778,651 bales.

"In 1848 we have a receipt on the 1st of September at New Orleans of 2,864 bales, and a total crop of 2,728,596 bales.

"In 1849 (the succeeding year) we find the receipts at New Orleans on the 1st of September to be only 477 bales, and the crop for that year falling off to 2,096,706 bales!

"In 1851 we find an unusually early receipt of the 'first bale,' and a receipt of new cotton at New Orleans on the 1st of September of over 3,000 bales! The crop that year was the largest ever grown up to that period, being over 3,000,000 bales!

"In 1852 (the succeeding year) we find the receipts at New Orleans on the 1st of September to be 5,077 bales, being the largest receipt ever known up to that time; followed in exact ratio by the largest crop ever grown, being 3,262,882 bales.

"In 1853 we have a late receipt, followed by a diminished crop.

"In 1854 we have another small receipt on the 1st of September, with a small total crop.

"In 1855 we find an unusually early receipt of cotton, with the receipts at New Orleans on the 1st of September amounting to the unexampled figure of 23,382 bales! An increased crop follows this early heavy receipt, being over 3,500,000 bales.

"In 1856 (the next year) the receipts at New Orleans on the 1st of September were only 1,166 bales, and the crop, true to the principle of LABOUR, on which it depends so much, fell to 2,933,781 bales.

"In 1857 the receipts on the 1st of September of new cotton at New Orleans was only 33 bales, followed by a short crop.

"In this year the receipts up to date at New Orleans figure up 4,834 bales, embracing, of course, the flooded districts.

"Referring to our annual tabular statement, it will be found that the ratio of increase in consumption keeps pace with increase of production, if indeed it does not exceed the latter."

Digitized by Google

Growth and Consumption of the United States.

Years.	New Orleans.	Florida.	Alabamba.	Texas.	Georgia.	South Carolina.	North Carolina.	Virginia.	Total Growth of United States.	Consumed and in Spinners' hands.
1839–40	953,672	136,257	445,725	- -	292,693	313,194	9,394	26,900	2,177,835	291,279
1840–41	814,680	93,552	320,701	- -	148,947	227,400	7,865	21,800	1,634.945	297,288
1841–42	727,658	114,416	318,315	- -	232,271	260,164	9,737	21,013	1,683,574	267,850
1842–43	1,060,246	161,088	481,714	- -	299,491	351,658	9,039	15,639	2,378,875	325,129
1843–44	832,172	145,562	467,990	- -	255,597	304,870	8,618	15,6 0	2,030.409	346,744
1844–45	929,126	118,693	517,196	- -	295,440	426,361	12,487	25,200	2 394,503	389,006
1845–46	1,037,144	141,184	421,966	27,008	194 911	251,405	10,637	16,282	2,100 537	422,597
1846–47	705,979	127,852	323,462	9,317	242,789	350,200	6,061	13,991	1.778,651	427,597
1847–48	1,190,733	153,776	436,336	39,742	254.825	261,752	1,518	8,952	2,347,634	531,772
1848–49	1,093.790	200,186	518,706	38,827	391,372	458,117	10,041	17,550	2,728,596	518,089
1849–50	781,886	181,344	350.962	31,263	343.635	384,265	11,861	11,500	2,096,706	487,769
1850–51	933,369	161,204	451,748	45,820	327,376	387,075	12.928	20,737	2,345,257	404,108
1851–52	1,373,464	188,499	549,449	64,052	325 714	476,614	16,242	20,995	3,015,029	603.029
1852–53	1,560.878	179,476	545,029	85,790	349,490	463.203	23,496	25 523	3.262,882	671,009
1853–54	1,346,925	155,444	538,684	110,325	316,005	416,754	11,524	34.366	2.930,027	610,571
1854–55	1,232,644	136.597	454,595	80,737	378.694	490,272	26,139	38,661	2,847,339	593,584
1855–56	1,661,433	144,404	659,738	116,078	389,445	485,976	25,098	34,673	3,517,845	
1856–57	1,435,000	136,344	503,177	89,882	322,111	397,331	27,147	28,827	2,939,519	
1857–58	1,576,409	122,251	522,364	145,286	282,973	406,251	23,999	34,329	3,113,962	

Stock in Ports, and Price of "Middling" New Orleans, at the Close of each Year.

Years.	American.	Brazil.	East Indies.	West Indies.	Egyptian, &c.	Total.	Equal to Week's Consumption.	Price of Middling, 31st Dec.
						Bales.		d.
1840	305,000	23,700	98,500	14,300	22,500	464,000	19	6
1841	279,600	46,100	187,600	24,700	31,400	539,400	24	5 3/4
1842	283,400	58,700	179,900	20,200	22,200	564.400	25	4 1/2
1843	483,200	68,300	193,200	12,200	28,800	783,700	29	5 1/4
1844	544,900	62,700	289,200	13,700	41,400	901,900	33	4 1/2
1845	693,100	52,300	241,000	6.100	67,900	1,060,400	35	4
1846	302,800	23,700	187,400	4,500	57,400	545,800	18	7 1/2
1847	239,200	59.300	125,100	2,200	26,100	451,900	20	4 1/2
1848	273,300	68,700	137.200	2,600	16.800	498,600	18	4
1849	316,400	95,200	107,800	2,000	38,000	559,400	18	6 1/4
1850	273.900	68,700	143,400	1,300	35,100	522,400	18	7 1/2
1851	245,800	49,500	172.000	1,300	25.900	494,500	15	4 1/2
1852	360,700	54,600	133.100	5,800	103,200	657,400	18	5 1/4
1853	308,900	48,900	270,600	4,000	85,100	717.500	20	6 1/8
1854	311,800	47,500	204,000	4,000	59,000	626.300	17	5
1855	236,300	63,100	133,100	3,500	50,500	486,500	12	5 1/8
1856	178,130	27,170	99,400	700	27,170	332.740	8	7 1/2
1857	202,430	36,180	191,330	5,020	17,5 0	452,550	12	6 1/2

The Growth, Consumption, and Export of Cotton from the United States during the Fifteen Years ending 1858.

Years.	Crop of the United States.	Consumption in the United States.	Exported to				
			Great Britain.	France.	North of Europe.	Other F. Countries	Total.
1844–45	2,394.503	389,006	1,439,306	359.357	134,501	150,592	2,083,756
1845–46	2,100,537	422.597	1,102,369	359,703	86,692	118,028	1,666.792
1846–47	1,778.651	427,597	830,909	241,486	75,689	93,138	1,241,222
1847–48	2,347,634	616,044	1,324,265	279,172	120,348	134,476	1,858,261
1848–49	2,728,596	642,285	1,537,901	368,259	165,458	156,226	2.227,844
1849–50	2,096,706	613.498	1,106,771	289.697	72,256	121.601	1,590.155
1850–51	2.355,257	485,614	1,418,265	301,258	129.492	129,595	1,988,710
1851–52	3.015,029	669,603	1,668,749	421,275	168,875	184,647	2.443,645
1852–53	3.262,882	803,725	1,736,860	426,728	171.176	193,636	2.528,490
1853–54	2.930,027	737,236	1,603,750	374,058	165,172	176,168	2.319,148
1854–55	2,847,339	706,412	1,549,716	409,931	135,200	149,267	2,344.309
1855–56	3,527,845	770,739	1,921,386	480,637	304.005	248,578	2,954.606
1856–57	2,939,519	819,936	1,428,870	413,357	245,798	164,622	2 242,647
1857–58	3,113,962	595,562	1,809,968	384,002	215,145	181,242	2,589,968

Digitized by Google

Cotton Crop of the United States.

	1857.	1858.
New Orleans	1,435,000	1,576,409
Mobile	503,177	522,364
Florida	136,344	122,351
Georgia	322,111	282,273
South Carolina	397,331	406,251
North Carolina	27,147	23,959
Virginia	23,733	24,705
Texas	89,882	145,286
Tennessee, &c.	9,624	4,754
Total crop	3,113,962	2,939,519
Total crop of 1858 as above	3,113,962	
Crop of last year	2,939,519	
Crop of year before	3,527,845	
Increase from last year	174,443	
Decrease from year before	413,883	

Exports to Foreign Ports in 1857–58.

	Great Britain.	To France and the Continent.	Total.
New Orleans bales	1,016,716	478,354	1,495,070
Mobile "	365,464	121,868	387,032
Texas "	33,933	16,404	50,338
Florida "	25 771	— —	25,771
Savannah "	149,346	18,356	167,700
Charleston "	192,251	107,153	299,404
North Carolina "	—	—	—
Virginia "	495	— —	495
Baltimore "	164	— —	164
Philadelphia "	995	— —	995
New York "	110,721	37,100	147,821
Boston "	14,110	1,553	15,663
Total "	1,809,966	780,489	2,590,455
Total last year "	1,428,870	823,787	2,252,657
Increase "	381,096	16,710	397,806

Consumption.			Growth. Total Crop of Bales.		Quantity consumed by, and in the hands of Manufacturers. Bales.
Total crop of United States, 1858		3,113,962	1857—8	3,113,962	
Add Stocks on hand at the commencement of the year 1st September, 1857:—			1856—7	2,939,519	819,936
In the southern ports	23,380		1855—6	3,527,845	770,789
In the northern ports	25,678		1854—5	2,847,339	906,412
	49,258		1853—4	2,930,027	737,236
			1852—3	3,262,882	803,725
Makes a supply of		3,163,220	1851—2	3,015,029	699,603
Deduct the export to foreign ports	2,590,455		1850—51	2,355,257	404,108
Less foreign included	723		1849—50	2,090,706	487,769
	2,589,732		1848—9	2,728,596	518,039
Stocks on hand at the close of the year 1st September, 1858:			1847—8	2,347,634	531,772
In the southern ports	57,604		1846—7	1,778,651	427,967
In the northern ports	45,322		1845—6	2,100,537	422,597
	102,926		1844—5	2,394,503	389,006
Burnt at New York and Baltimore, and manufactured in Virginia	18,377		1843—4	2,030,409	346,744
		2,711,035	1842—3	2,378,875	325,129
			1841—2	1,683,574	267,850
Taken for home use		595,562	1840—41	1,634,945	297,288
			1839—40	2,177,835	295,193
			1838—9	1,360,532	276 018
			1837—8	1,801,497	246,063
			1836—7	1,422,930	229,540
			1835—6	1,360,725	236,733
			1834—5	1,254 328	216,888
			1833—4	1,205,394	196,413
			1832—3	1,070,438	194,412

— D .M.

Digitized by Google

Import into Great Britain, and Quantity taken for Export and Home Consumption.

Years.	Import.							Export.	Annual Consumption.	Weekly Consumption.					
	American.	Brazil.	East India.	Egyptian, &c.	West Indies.	Total.	Average Weight of Import.			American.	Brazil.	Egyptian, &c.	East India.	Demerara, West Indies, &c.	Total, Weekly.
						Bales.	Lbs.	Bales.	Bales.						Bales.
1840	1,237,500	85,300	216,300	38,000	22,300	1,599,500	365	119,700	1,251,300	19,592	1,444	540	2,227	260	24,063
1841	902,432	94,298	273,637	40,720	32,935	1,344,022	365	116,300	1,192,300	17,575	1,344	608	2,996	406	22,929
1842	1,013,314	87,090	255,437	19,681	17,372	1,392,894	379	134,400	1,160,400	17,178	1,340	544	2,940	313	22,315
1843	1,396,839	98,697	182,065	48,809	17,687	1,744,097	382	120,200	1,367,800	21,355	1,496	744	2,237	462	26,294
1844	1,246,924	112,869	237,596	66,721	17,474	1,681,584	383	136,800	1,428,600	21,654	2,146	1,054	2,319	300	27,473
1845	1,499,600	110,200	155,100	82,000	8,800	1,855,700	386	122,880	1,574,400	24,804	2,192	1,062	1,888	331	30,277
1846	991,000	84,200	94,700	60,600	13,000	1,243,500	386	194,200	1,585,960	24,623	2,048	1,338	2,189	300	30,498
1847	874,100	110,200	222,800	20,700	4,900	1,232,700	377	221,800	1,157,800	16,683	1,258	994	3,194	136	22,265
1848	1,375,400	100,200	227,500	29,000	7,900	1,740,000	395	189,600	1,463,700	22,875	1,419	725	2,077	150	28,146
1849	1,477,700	163,800	182,200	72,600	9,100	1,905,400	396	254,200	1,590,400	24,688	2,260	969	2,442	187	30,546
1850	1,184,200	171,080	307,900	79,700	5,700	1,749,930	302	271,800	1,514,500	20,767	3,310	1,542	3,385	121	29,125
1851	1,393,700	108,700	328,800	67,400	4,900	1,903,500	399	268,500	1,662,900	24,316	2,421	1,458	3,686	98	31,979
1852	1,789,200	144,200	221,400	189,900	12,800	2,357,500	392	282,800	1,861,800	28,202	2,404	1,877	3,162	159	35,804
1853	1,532,000	132,400	485,300	105,400	9,100	2,264,200	398	350,200	1,903,900	27,871	2,325	2,425	3,804	188	36,613
1854	1,665,800	106,900	308,300	81,100	10,400	2,172,500	408	316,600	1,947,100	29,225	1,925	2,100	3,996	198	37,444
1855	1,623,600	134,700	396,100	114,800	8,900	2,278,100	396	316,900	2,101,000	30,356	2,192	2,321	5,351	181	40,404
1856	1,758,208	122,311	463,932	113,111	11,400	2,468,982	406	358,670	2,204,044	31,574	2,850	5,221	2,477	263	42,385
1857	1,479,610	168,349	680,466	75,598	11,467	2,415,481	404	337,200	2,028,515	27,071	2,956	7,079	1,768	136	39,010

Digitized by Google

Description.	1849.	1850.	1851.	1852.	1853.	1854.	1855.	1856.	1857.
	d. d.	d. d.	d. d.	d. d.	d. d.	d. d.	d. d.	d. d.	d.
Sea Island -	9 @ 24	11½ @ 24	10½ @ 24	16 @ 30	9½ @ 34	8 @ 32	7½ @ 32	10½ @ 32½	25
Stained ditto -	6 9	7 12	4 10	5½ 14	4 10	4 9	4 8	6 9½	5 8½
Upland - -	5¼ 6⅜	7 8¼	4 5¼	4⅜ 6¼	4 6⅜	3⅝ 6	4⅛ 6⅛	6 8	4 6⅜
Mobile - -	5⅜ 6⅜	7 8¼	4 5¼	4⅜ 6¼	4 6⅜	3⅝ 6	4⅛ 6	6 8	4 6⅜
New Orleans -	5⅜ 8	7 9¼	4 6¼	4⅜ 7¼	4 7⅜	3⅝ 7	4⅛ 7⅛	6 8⅛	4 7⅛
Pernambuco -	6⅜ 7	8¼ 9	5⅛ 7	6⅜ 7⅛	6½ 7	6 8	6 7⅛	7⅛ 8½	6½ 7⅛
Bahia & Macelo	6⅜ 6¼	8⅛ 8¼	5⅜ 6⅜	6⅜ 6⅜	6 6⅜	5⅛ 6¼	5⅛ 6⅜	7⅛ 7⅜	5⅛ 6⅛
Maranham -	6 6⅜	7⅛ 9¼	4⅛ 7⅛	5¼ 7⅛	5⅛ 8	5 7⅛	5⅛ 7	7⅛ 8½	6½ 7⅛
Peruvian -	- -	- -	- -	- -	- -	6¼ 6⅜	5⅛ 7	7⅛ 7⅛	6½ 7
Egyptian -	6 9	7⅜ 11	5 9	5½ 13	5½ 13	5 10	5½ 9	6⅜ 11	7 9½
Demerara, &c. -	5⅛ 7¼	7⅜ 9¼	5½ 9	5½ 12	6 11	5½ 9	5⅛ 7⅜	6⅜ 9½	6 9
Common W. In.	5⅜ 6⅜	7 9	4⅛ 6¼	5½ 9	5½ 9	4⅛ 8	5 8	6½ 9	5 6½
Laguira, &c. -	6 6½	7¼ 7¾	4⅛ 5⅛	5⅛ 5⅛	5⅛ 6	5 5⅛	5⅛ 6	7 7⅛	5⅛ 6⅜
Carthagena -	4¼ 5⅛	5½ 6	3 4	3⅜ 5⅛	3¼ 7⅛	2⅛ 3¼	3¼ 4½	3⅜ 4⅜	3¼ 4⅛
Smyrna -	- -	- -	3⅛ 4¼	4 4½	- -	- -	- -	- -	- -
Surat - -	4 5	4⅛ 6¼	2¼ 4⅛	3⅛ 5	2¼ 4⅛	2¼ 4¼	3¼ 4⅜	4⅛ 5⅛	3¼ 5
Bengal - -	- -	- -	2⅛ 3¼	3⅛ 4	2¼ 3⅛	2¼ 3⅛	3 3⅜	4¼ 4⅞	3¼ 3⅞
Madras - -	4¼ 5	4⅛ 6¼	2⅛ 4	3⅛ 4⅛	2¼ 4¼	2¼ 4	3¼ 4⅜	4⅛ 5⅛	3¼ 5

Price of Water and Mule Twist, in Manchester, on the 31st of December in each Year.

	No.	1840	1841	1842	1843	1844	1845	1846	1847	1848	1849	1850	1851	1852	1853	1854	1855	1856	1857
Mule Twist.																			
Common Seconds -	6																		
	8	8½	7½	6⅜	6⅝	6⅜	6⅝	8½	6	5½	6⅝	8½	6⅜	6⅝	6⅝	6½	6½	7⅝	7
	10																		
	12																		
	20	8½	8½	7⅝	7⅝	8	7⅝	9	7	6½	7⅝	10	7⅜	8	8½	7½	7⅝	9½	8
	30	10½	9⅝	9½	9	9	8⅞	10⅜	8	7½	9	11	8⅝	9⅝	9⅝	8⅜	8⅝	10⅜	9
	40	14	13	12⅝	12½	12⅛	12⅝	14	11⅛	9⅜	12⅛	13	10⅝	11⅞	12	11	11	12⅝	12¼
Best Seconds -	6																		
	8	9	8⅜	7⅝	7⅝	7⅛	7⅛	9½	6⅛	5⅝	7⅛	9	7	7⅛	7⅛	6⅝	6⅝	8⅛	7⅛
	10																		
	12																		
	20	10⅛	9⅛	10⅛	9	8⅛	8⅛	10⅛	7⅛	6⅝	8⅛	10⅛	8	8⅛	8⅝	7⅝	8⅝	9⅝	8⅛
	30	12	12	13	12	10	9⅝	11⅝	9	7⅛	9⅛	11⅝	9⅝	10⅝	10⅝	9⅝	9⅝	11	9⅝
	40	16⅛	15⅛	-	15⅛	13⅛	13⅝	15⅝	12⅛	11	13	13⅛	11⅝	12	12⅝	11⅛	11⅛	13	13
Water Twist.																			
Common Seconds -	6																		
	8	8	6½	6½	6⅛	6⅛	6⅝	7⅝	5⅝	5	6⅛	8½	5½	5⅝	5⅝	5½	5⅝	6⅝	6½
	10																		
	12																		
	20	9	8½	7½	7½	7½	7⅝	8⅝	6⅝	6	7½	9½	6⅝	7⅝	7½	6⅝	6⅝	8	7
	30	10½	9½	8⅝	8½	8½	8⅝	10	7½	6⅜	8⅛	10⅝	7⅝	8½	8½	7⅛	8	9⅛	7⅝
	40	10⅝	9⅜	9	9	9⅛	9⅜	10½	7⅝	7½	9⅛	12½	8	9½	9⅝	8½	8½	10½	9⅜
	50	12	11	11	10½	11	10⅝	12½	8⅝	8½	10⅝	13⅝	9⅝	11	11	10	10	11½	10⅜
	60	14⅜	12⅜	12	12⅛	13⅛	12⅝	13½	10	9½	12½	15⅜	10⅝	12⅜	12	11	11	12½	11
	70	16⅜	15	13⅜	14⅛	16	14½	15⅝	12	11	13⅜	17½	12⅜	14	14⅜	13	13	14⅜	12
	80	18⅜	17	15⅜	16⅜	18⅛	18½	19⅝	14½	13	17	19½	14⅜	16⅜	17	15½	15	16	16
Best Seconds -	6																		
	8																		
	10	9	7½	7⅛	7⅛	7½	7⅝	9⅛	6⅝	5⅛	7	8⅝	5⅝	6⅛	6	5⅝	6	7½	6⅝
	12																		
	20	9⅝	9½	8⅛	8½	8⅝	8⅝	10½	7⅝	6⅛	8	10	7⅛	8½	7⅝	7	7½	8½	7⅛
	30	12	10⅝	9⅛	10	9⅝	9⅝	11½	8½	7	9	11⅛	8	9½	8⅝	8	8½	10	8⅝
	40	12⅛	11⅛	10⅝	11½	10	10⅝	11⅝	9	7⅛	10	12½	8⅛	10	9⅝	8⅝	9⅝	11	10⅛
	50	13⅝	12	12	11⅝	12	11⅛	13⅜	11	8½	11⅛	14⅜	10	10	11⅛	10⅛	10⅛	11⅝	11
	60	16	16	15	14½	16⅛	13⅜	15½	13	10	12⅝	16	11⅛	13	12⅝	11⅛	11⅛	12⅝	11⅛
	70	18⅛	18	17	17⅛	18⅛	16⅝	18½	14½	12	14	17⅝	13	15	14	12⅝	13⅛	15	14⅛
	80	21	20⅛	19	19⅛	20⅛	21⅛	22½	16	14	18	20	15⅛	17	17⅛	16	15⅝	16⅛	16⅝

The following table, showing some of the variations in the prices of cotton during the early months of the present year (1866) will, in contrast with the table given above, be instructive:—

	Jan. 17.	Feb. 15.	Feb. 27.	March 2.	March 28.	April 9.	April 18.
	d. d.	d. d.	d. d.	d. d.	d. d.	d. d.	d. d.
American - -	18½ to 21	17½ to 21½	17 to 21	17½ to 20½	17 to 21	16½ to 19½	14 to 17½
Pernam, &c. -	20½ — 21½	19½ — 20½	19 — 20½	19½ — 20	18½ — 21½	19 — 19½	18 — 19
Maranham - -	20½ — 21	20½ —	19½ — 20½	19½ — 20	19½ — 20½	19½ — 20	19 — ....
Macelo and Bahia	18½ —	.... —	18 —	.... —	18½ —	17 —	18 — 18½
Egyptian - -	23 — 28	21½ — 26	19½ — 26	21 — 28	21 — 28	22½ — 25½	21 — 26
Smyrna - - -	16½ — 18½	15 — 17½	14½ — 18	15 — 17½	14½ — 17½	14 — 15½	13 — 16½
Surat - - -	13½ — 18	11 — 17	13 — 16	9 — 17½	9 — 16½	10½ — 16½	9 — 16
Madras - - -	15½ — 16½	14 — 15½	14½ — 15½	14½ — 16	14 — 15½	13½ — 15	12½ — 15
Bengal, Scinde, &c.	12½ — 14½	11½ — 13½	12 — 13	12 — 13½	10½ — 13	10½ — 11	11 — 11½
China - - -	17½ —	.... —	18 —	.... —	.... —	16½ —	.... — ....
Japan - - -	.... —	.... —	.... —	.... —	.... —	.... —	.... — ....
Peru - - -	21 — 21½	20 — 20½	19 — 21	.... —	19 — 21	19 —	18 — 19

Digitized by Google

The following extracts from the Report of Messrs. Ellison and Heywood, of Liverpool, show in a satisfactory manner the present state of the cotton trade (1865–6):

"The new year opens with the promise of a healthier and more remunerative trade than has been experienced for several years past. The doubt and uncertainty that still surround the future of supply will tend to repress excessive speculation, and lead to a cautious and steady legitimate business. As to supply, we look for a moderate increase upon the total import of 1865; less from the Mediterranean, but more from other quarters. We are yet so completely in the dark as to the quantity of cotton remaining in the Southern States, that any estimate of supply from America must be more than usually conjectural. We have assumed 800,000 bales, but should not be surprised to see that figure exceeded. Much will depend upon the amount of the next crop and the proportion which we shall receive before the close of the present year. The stimulus of high prices, and the proverbial energy of the American people, will, perhaps, produce a larger yield than seems at present to be generally anticipated, but yet one that will fall very far short of the requirements of the world, and therefore render any important decline from present rates improbable The monetary disturbances of the past year, and the high prices of cereals, have exercised a prejudicial influence upon the Indian crop, more grain and less cotton having been put into the ground than in the previous season. As, however, we have about 160,000 bales more afloat than at this time last year, and which, but for the great depression experienced in the spring, would have been shipped in time to have been included in the import of 1865, we think it highly probable that the import of 1866 will reach from 1,250,000 to 1,300,000 bales, against 1,266,000 bales last year—due allowance being made for shipments to China. Should the arrivals from America show any important excess upon our estimate, no doubt prices would be depressed, and the shipments from India curtailed, as was the case last year. The Egyptian crop accounts are very unfavourable. Opinion differs as to the probable deficiency, compared with the yield of last year; some authorities place it as high as 50 per cent., others as low as 25 per cent. Taking the least unfavourable view of the matter, Great Britain's share of the crop would be about 250,000 bales, against 334,000. A similar reduction for Turkey, whence the advices are equally discouraging, would give us 60,000 bales against 80,000 bales. From the Brazils the news is very cheering, and we anticipate an import thence of about 100,000 bales more than last year—say 440,000 bales against 340,000. The West Indies, Peru, and miscellaneous sources will most likely send us 150,000 bales, against 131,000 bales.

"A recapitulation of the foregoing gives the following total, as compared with the actual figures of 1865 and 1864:—

Import into Great Britain.

	1864.	1865.	1866.
America - - - -	198,000	462,000	800,000
Brazils - - - -	212,000	340,000	440,000
Egypt - - - -	257,000	334,000	250,000
Turkey - - - -	62,000	80,000	60,000
West Indies &c. - -	60,000	131,000	150,000
East India - - -	1,399,000	1,266,000	1,300,000
China - - - -	399,000	142,000	Nil
Total - - - -	2,587,000	2,755,000	3,000,000
Ditto in bales of 400lb.	2,242,000	2,414,000	2,660,000

"Direct shipments from America to the Continent will probably reduce the export from this country to 15,000 bales per week against 17,000 bales last year, or a total of 780,000 bales against 890,000 bales. This would leave 2,220,000 bales of all kinds for home consumption, or only 42,700 bales per week against 39,100 bales last year, and a present average of 45,000 bales.

"There is, therefore, nothing to warrant the expectation of any material average decline in prices. The anticipated increased supply in actual packages is 245,000; but in bales of the uniform weight of 400lb., only 146,000. Considerable fluctuations may be anticipated arising out of the varying relations of supply and demand, as well as from the changes of feeling and opinion which must ever attend the market until the trade has resumed its normal character. The exceedingly low state of the stocks of all kinds of cotton goods will be a great source of strength to the Manchester market, and enable producers to maintain, if not to increase, the present margin between the prices of raw cotton and the manufactured article. The probability of dear money and constantly varying rates of discount, will curb speculation, and have a tendency to keep business within safe bounds.

Digitized by Google

"Subjoined we give a comparative statement of the supply and stocks for six years, reduced to bales of the uniform weight of 400lb. (in thousands of bales):—

	1866.	1865.	1864.	1863.	1862.	1861.
Import - - - -	2,660	2,439	2,241	1,729	1,333	3,153
Stock in Ports, Jan. 1 - -	374	486	299	411	698	626
Ditto, held by the trade -	82	79	45	45	92	21
Total of cotton - -	3,116	3,004	2,585	2,185	2,123	3,800
Add stock of goods Jan. 1 -	76	102	180	381	734	605
Total of cotton and goods	3,192	3,106	2,765	2,566	2,857	4,405

"The cotton famine being virtually at an end, we have thought that a comparative statement of the economic vicissitudes of the trade during the past ten years would not be uninteresting to our friends. For some time past, therefore, we have been occupied in the examination of a great number of facts on the subject, obtained from the most competent practical authorities in the manufacturing dirtricts. The results of our investigations are given in the two concluding tables of this report:—

"1. An estimate of the weight and value of the total production of cotton manufactures in Great Britain, with the cost of production, and the balance remaining for interest of capital and profits for each of the past ten years.

"2. The weight of yarns and goods produced, the quantities exported and consumed at home, and the stock on hand at the close of each year.

"In drawing attention to these tables we shall, for the present, content ourselves with offering a few merely explanatory remarks. In estimating the amount of yarn produced we have deducted from the cotton consumed, for waste in spinning, 10½ per cent. for the six years ending with 1861; 17 per cent. for 1862; 15 per cent. for 1863, and 14 per cent. for 1864 and 1865. Assuming the loss in working East India descriptions to be 25 per cent., and that in other kinds 10½ per cent., the apparent net loss was 19¾ per cent. in 1862, 18 per cent. in 1863, and 17 per cent. in 1864 and 1865; but from these figures we have deducted 2¾ per cent. for 1862, and 3 per cent. for each of the subsequent years, for increased economy in spinning. In reducing the yarn and piece goods exported in the years 1862 to 1865 to weight we have allowed 5 per cent. for extra sizing. A close examination of the Board of Trade values of yarns and goods exported in 1862, 1863, and 1864, convinced us that the figures fell considerably short of the real value at the time of shipment; this deficiency we place at 5,201,080*l.* for 1862, 5,493,000*l.* for 1863, and 2,799,000*l.* for 1864. Messrs. John Pender and Co. estimated the deficiency for 1862 alone at 13,042,000*l.*; but this, we think, too much. The value of goods consumed at home is assumed to be one-third more than the same weight of manufactures exported. The cost of cotton consumed is based upon the average prices of each year. The estimated amount paid for wages and expenses is the result of an elaborate series of calculations relating to each department of the trade, and is placed upon data supplied by practical spinners, manufacturers, &c. Our impression is that the computation is a very liberal one, and more likely to be over than under the actual outlay. The balance left for interest of capital, &c., agrees with the general tenour of the annual trade reports published by the principal Manchester houses. Apparently the trade of last year was as profitable as that of 1856; but in reality it was not so, inasmuch as there is one-third more fixed, and perhaps one-half more floating, capital employed now than there was ten years ago.

"As a starting point for the second table, we have assumed the stock of goods in first hands at the beginning of 1856 to be equal to 130,000,000lb. of yarn. Our estimate is based upon the most reliable information, and is at least not over the mark. The actual home consumption of cotton goods we estimate at 5½lb. per head in 1856, 1857, and 1858; at 6lb. per head in 1859, 1860, and 1861; at 3½lb. per head in 1862, with a reduction of 10 per cent. in 1863, and a recovery of 20 per cent. in 1864; and at 5lb. per head in 1865, including the extra stocks held by the retail shopkeepers, who purchased largely at the low prices current in the spring and summer months. In the calculations for each year due allowance has been made for the annual increase in population. The stocks on hand gradually increased from about two months' production at the beginning of 1856, until the close of 1861, when they were equivalent to about three months' production, since which period they have rapidly dwindled down to about a fortnight's production. The present stock, as compared with the annual out-turn of our spindles and looms, is probably the smallest ever known.

Digitized by Google

"After a careful analysis of the figures contained in the first table, we estimate the losses of the trade during the past four years as follows:—

Loss of interest of capital and profits to employers -	£37,000,000 to	£40,000,000
Loss of wages to operatives, &c. - - - - -	28,000,000 —	30,000,000
Total loss - - - - - - -	65,000,000 —	70,000,000

About three-fifths of the loss in wages fell upon operatives engaged in spinning and weaving. Of the total amount perhaps about one-fourth was recovered in the form of relief, and remuneration received for permanent or occasional employment in other branches of industry. The total sum distributed in charity alone amounted to about 3,000,000*l.* A good portion of the employing class obtained a set-off in the enhanced prices gained for the heavy stocks of yarns and goods held at the close of 1861. Fortunate speculation during the course of the famine was a prolific source of assistance to many, though, as regards the trade at large, it is probable that these profits were counterbalanced by the heavy losses of others. Spinners gained about 360,000*l.* upon the stock of raw cotton held at the close of 1860, and this sum we have deducted from the cost of cotton used in 1861. Very little beyond the cost price was obtained for the stock they held at the end of 1861, as there was only a slight advance in values during the first six months of 1862.

"Assuming that if the total stock of cotton in the ports at the close of 1861 (279,000,000lb.) two-thirds or 186.000,000lb. were sold in 1862 at an advance of 6d. per lb., and one-third or 93,000,000lb. in 1863, at an advance of 12d. per lb.—the total amount of profit realised was about 9,300,000*l.* A similar calculation for the yarns and goods on hand at the same date (293,000,000lb.) shows a total gain of 9,800,000*l.*, making the aggregate profit on the raw and manufactured article of 19,100,000*l.* We have no means of estimating the gains and losses of importers during the past four years. Many shipments have, of course, shown a very handsome margin; but, on the other hand, a vast number have ruined their consignees. The fluctuations in prices have been so frequent and so great, that it would not be easy to put the result of the four years' transactions into figures; but if such an account could be made up, we should not be surprised to find the balance on the wrong side."

One of the tables referred to above professes to be "an estimate of the weight and value of the total production of cotton manufactures in Great Britain, with the cost of production and the balance remaining for interest of capital and profit for each of the past ten years." We select three out of its ten columns as giving an abstract possessing sufficient interest for our readers:—

	1860.	1862.	1865.
	lb.	lb.	lb.
Cotton consumed - - - - -	1,079,321,000	449,821,000	718,651,000
Less waste in spinning - - -	113,328,000	76,469,000	100,611,000
Yarn produced - - - -	965,993,000	373,352,000	618,040,000
Exported in yarn - - - - -	197,343,000	88,554,000	98,460,000
Ditto in piece goods, apparel, &c. -	542,770,000	324,128,000	379,780,000
Retained for home consumption and Stock - - - - - - -	225,880,000	*39,330,000	139,800,000
Total as above - - - -	965,993,000	373,352,000	618,040,000
		£	£
Declared value of yarn exported -	9,87 ,000	7,523,000	10,277,000
Ditto, piece goods, apparel, &c. do.	46,248,000	38,616,000	52,330,000
Estimated value of home consumption, &c. - - - - - -	24,470,000	*3,413,000	21,000,000
Total value of goods produced -	80,588,000	42,726,000	83,607,000
Cost of cotton consumed - - -	28,910,000	26,734,000	47,257,000
Paid in wages and other expenses -	33,600,000	14,520,000	23,850,000
Total expenditure - - - -	62,510,000	41,254,000	71,107,000
Balance left for interest of capital and profits - - - - - -	18,078,000	1,472,000	12,500,000

* Excess of export over production to be deducted.

Digitized by Google

The Weight of Yarns and Goods Produced, the Quantities Exported and Consumed at Home, and the Stock on Hand at the Close of each Year.

	1860.	1862.	1865.
	lb.	lb.	lb.
Stock on hand 1st of January - -	189,120,000	293,770,000	40,810,000
Yarn and manufactures produced -	965.993,000	373,352,000	618,040,000
Total supply - - - - -	1,155,113,000	667,122,000	658,850,000
Yarns and goods exported - -	740,113,000	412,682,000	478,240,000
Estimated actual home consumption -	173,000,000	102,000,000	150,000,000
Total deliveries - - -	913,113,000	514,682,000	628,240,000
Stock on hand December 31 - -	242,000,000	152,440,000	30,610,000
Do. of cotton held by the trade December 31 - - - - -	86,100,000	18,600,000	32,868,000
Ditto, in the ports, December 31 -	250,549,000	104,599.000	149,776,000
Estimated total weight of yarns, goods, and cotton, December 31 -	578,649,000	335,639,000	213,254,000

The following is the estimate of cotton in the United States on February 1st 1866:—

	Bales.
Cotton in New York city - - - - - - - -	327,000
Cotton in other cities—viz. Boston, Providence, Philadelphia, Baltimore, Wilmington, Charleston, Mobile, New Orleans, Florida, and other Texas ports, St. Louis, and other Mississippi river ports - - - - - - - - -	600,000
Estimated to come forward from the interior (the estimates are made by commission merchants and others, who have agents throughout the South where there is a probability of cotton being for sale) - - - - - - -	550,000
Total number of bales - - - - - - -	1,477,000

The amount gone into consumption and exported during the nine months from May 1st, 1865, to February 1st, 1866, is thus shown:—

	Bales.
Supply in the United States, May 1st, 1865 - - - -	2,255,000
„ „ February 1st, 1866 - - - -	1,477,000
Consumed and exported in nine months - - - - -	778,000

Of a total supply of 2,255,000 bales on May 1st, 1865, we have up to February 1st, 1866, shipped and taken into consumption at home, 778,000 bales, and have 1,477 000 bales for supplying foreign and domestic spinners until the new crop comes to market. The home consumption and export combined, averaged for the nine months ending February 1st, 87,555 bales per month; the stock on hand, after deducting 500,000 bales for stock at the ports, will yield, from February 1st to September 1st, an average monthly supply of 139,571 bales, or 60 per cent. more than the average during the former period. At the same time, New England is largely supplied with cotton. The stock held at the mills of that section is estimated at 185,000 bales, which, upon an average weekly consumption of 12,000 bales, is equal to a four months' supply. Such are the facts connected with the supply of cotton, as nearly as it is possible to estimate.

It was the small increase last year in the quantity of cotton available for British consumption which enabled prices to be so well maintained after the termination of the American war. Thus in 1859 cotton averaged 6·76*d.* per lb.; in 1860, 7·17*d.* per lb.; in 1861, 7·89*d.* per lb.; in 1862, 14·24*d.* per lb.; in 1863, 21·97*d.* per lb.; in 1864, 21·01*d.* per lb.; and in 1865, 16·20*d.* per lb.

The statistical abstract of the United Kingdom gives the following very complete table, showing the position of the cotton trade from 1850 to 1864, inclusive. Although in the previous table the imports and exports are given to the end of 1857, it is thought, the form of the tables being different, advisable to repeat, for completeness, this portion:—

Digitized by Google

Quantities of Raw Cotton Imported into the United Kingdom from various Countries, and Total Exported, and Excess of Imports.

Years.	The United States.	Bahamas and Bermudas.	Mexico.	British West India Islands (exclusive of Bahamas) and British Guiana.	New Granada and Venezuela.	Brazil.	The Mediterranean, exclusive of Egypt.	Egypt.	British Possessions in the East Indies.	China.	Japan.	Other Countries.	Total Imported.	Total Exported.	Excess of Imports.
	Lbs.	Lbs.	Lbs.	Lbs.	Lbs.	Lbs.	Lbs.	Lbs.	Lbs.	Lbs.	Lbs.	Lbs.	Lbs.	Lbs.	Lbs.
1850	493,153,112	3,360	—	225,553	180,880	36,299,982	162,006	18,769,408	118,872,742	—	—	1,909,818	663,576,861	102,469,717	561,107,144
1851	596,638,962	8,512	1,568	436,017	134,736	19,389,104	2,234,509	14,716,016	122,626,976	—	—	1,241,349	757,379,749	111,980,394	645,399,355
1852	765,630,544	96,992	—	606,704	335,440	26,506,144	2,235,072	45,823,568	84,922,432	—	—	3,625,552	929,782,448	111,884,321	817,898,127
1853	658,451,796	—	—	350,428	159,936	24,190,628	285,591	28,067,984	181,848,160	18,592	—	1,905,634	895,278,749	148,569,721	746,709,028
1854	722,151,346	5,376	—	403,734	229,040	19,703,600	149,883	23,353,120	119,836,009	1,344	—	1,499,697	887,333,149	123,326,112	764,007,037
1855	681,629,424	114,688	—	353,764	237,216	24,577,952	281,465	32,622,688	145,179,216	900,704	—	5,854,835	891,751,952	124,368,160	767,383,792
1856	780,040,016	—	—	462,784	134,512	21,830,704	217,840	34,399,008	180,496,624	2,688	—	6,302,128	1,023,886,304	146,660,864	877,225,440
1857	654,758,048	1,113,392	336	360,176	215,376	29,910,832	349,888	24,532,256	250,388,144	2,352	—	7,768,096	969,318,896	131,927,600	837,391,296
1858	833,237,776	—	—	367,808	74,144	18,617,872	15,792	38,282,320	132,722,576	—	—	11,073,888	1,034,342,176	149,609,600	884,732,576
1859	961,707,264	—	—	592,256	6,496	22,478,960	439,040	37,667,056	192,330,880	—	—	10,767,120	1,225,989,072	175,143,136	1,050,845,936
1860	1,115,890,608	585,984	—	464,800	225,120	17,266,864	82,544	43,954,064	204,141,168	3,920	—	8,303,680	1,390,938,752	250,339,040	1,140,599,712
1861	819,500,528	10,864	—	485,520	154,896	17,290,336	587,104	40,992,096	369,040,448	—	—	9,022,944	1,256,984,736	298,287,920	958,696,816
1862	13,524,224	5,403,328	3,131,520	722,736	1,170,736	23,339,008	6,225,856	59,012,464	292,654,528	1,766,016	224	17,022,656	523,973,296	214,714,528	309,258,768
1863	6,394,080	29,771,392	19,278,112	2,556,848	2,623,600	22,603,168	13,896,576	93,552,368	434,420,784	30,856,336	711,424	13,008,576	669,363,264	241,362,496	428,230,768
1864	14,148,064	42,117,264	25,539,024	1,223,264	6,500,368	36,617,504	21,595,840	125,493,648	500,527,392	86,157,008	9,404,304	16,581,040	893,304,720	244,702,304	648,602,416
1865	136,822,480	17,763,984	36,664,880	—	—	55,408,152	24,990,896	176,838,144	445,947,900	35,855,792	—	48,681,360	977,978,288	302,908,928	675,069,360

Digitized by Google

COTTON FIBRE—*injurious action of alkalies on.* Messrs Caro and Danser have recently called attention to this subject in a paper read before the Philosophical Society of Manchester. "A remarkable instance of the deleterious action of alkali on cotton fibre has lately come under our notice, when examining some indigo prints, which had been stiffened or finished with silicate of soda, and kept in bales during about two years. The strength of the fibre of the greater part of these goods had decreased to about one-third of the strength of some pieces which had been packed in the same bales, and which differed in no other respect from the others except in their having been finished with starch.

"Some of the sound pieces had been packed between the silicated goods, and had abstracted soda from them which had penetrated from the places of contact into the interior of the pieces to a considerable depth. In the same ratio in which the pieces had taken up soda it was found that they had diminished in strength. On the other hand, it was found that in such places of contact the silicate of soda of the silicated goods had suffered a partial decomposition, extending to the depth of four or five layers of the pieces. The silicate of soda in the middle of the pieces contained from 70 to 74 per cent. of silicic acid, combined with from 30 to 26 per cent. of soda; whilst the analysis of the silicate of soda contained in the contact layers showed that from one-third to two-thirds of its soda had been abstracted. This loss of soda was accompanied by a change of strength of the cloth which appeared to bear some proportion to it; the layers or folds of the cloth *decreasing* in strength as they were removed from contact with the starched goods until the silicate of soda attained the same composition as that found in the most rotten parts of the piece, this generally taking place about the fourth or fifth layer or fold of the piece, as before stated.

"The following table shows the changes in strength produced by this decomposition of the silicate of soda:—

	Finished with Starch.		Finished with Silicate of Soda.					
	Middle.	Contact layer.	Contact layer.	2nd.	3rd.	4th.	5th.	Middle.
Strength	100	81	89	68	62	54	48	35

"The silicate of soda had evidently been decomposed with the formation of free alkali and an acid silicate which appears to have very little action on the cotton fibre. In some places the decomposition had gone further, and free silicic acid had separated out in the form of a white powder upon the surface of the cloth. The same decomposition, accompanied by the same changes in the strength of the cloth, was observed upon all pieces which had been in contact with the paper used for wrapping the bales. In this instance the paper had absorbed the liberated soda, and the cloth in contact with it had almost entirely retained its original strength.

"The white portions of the patterns were in a further advanced state of decay than the blue ones, in most instances retaining only 10 per cent. of their original strength. In the goods finished with starch only, the whites were equally as strong as the blues. In the goods finished with silicate of soda, the whites were almost as strong as the blues in all places where the before-mentioned decomposition of the silicate of soda had been accompanied by an abstraction of soda; but in the interior of the goods, where the silicate of soda had retained its original composition, the strength of the whites had decreased to about one-third of that of the blues. It was therefore evident that this excessive decay of the whites was due to some cause which had assisted the action of the alkali upon them, and we believe to have found an explanation of this in the action of the silicate of soda upon the sulphate of lead contained in them to the amount of about 10 per cent. of the mineral ash.

"Sulphate of lead has been an ingredient of the resist paste printed on the places intended to remain white, and by the subsequent action of lime and sulphuric acid it has become fixed in the fibre. We have noticed that sulphate of lead decomposes solutions of silicate of soda very rapidly, with formation of sulphate of soda, free silicic acid, and silicate of lead. These changes give rise to the production of a crystallisable and strongly efflorescent salt, and to an increase in bulk; and we think that the mechanical effect produced by the crystallisation of the sulphate of soda formed may have caused a further and final disintegration of the fibre, already weakened by the action of the alkali. Under the microscope the fibre of the white portions of the pattern presented the appearance of *cylindrical* tubes, partly covered with minute crystals (soluble in water); in some places these tubes appeared to be split longitudinally."

COURT PLASTER is a considerable object of manufacture. Silk, sarcenet, fine muslin and prepared skins, usually receive preparations of isinglass or paste, to be

Digitized by Google

again covered by spirituous solutions of gum resins; in some cases flour-paste and isinglass alone are employed, in others isinglass in spirit of wine on oiled silk. It is made as follows (according to Dr. Paris): Black silk is strained and brushed over ten or twelve times with the following preparation :—Dissolve ½ an ounce of balsam of benzoin in 6 ounces of rectified spirits of wine; and in a separate vessel dissolve 1 ounce of isinglass in as little water as may be. Strain each solution, mix them, and let the mixture rest, so that any undissolved parts may subside; when the clear liquid is cold it will form a jelly, which must be warmed before it is applied to the silk. When the silk coated with it is quite dry it must be finished off with a coat of a solution of four ounces of Chian turpentine in 6 ounces of tincture of benzoin, to prevent its cracking. The application of collodion has tended to limit the uses of this manufacture. Gold-beaters'-skin or prepared membrane are coated with isinglass, and this again with solutions of gutta-percha or caoutchouc in chloroform or other solvents. Court plasters are also prepared transparent, flesh-coloured, &c. &c.

COW DUNG, employed in the processes of dunging in CALICO PRINTING, which see.

COW DUNG SUBSTITUTE. Sulphate, carbonate, and phosphate of lime and soda. See CALICO PRINTING.

COW TREE. One of the *Apocynaceæ* or Dogbanes. The hya-hya or milk tree of Demerara. Many of these plants are poisonous.

CRANBERRY. The acid red fruit of *Oxycoccus palustris*. It is a native of Great Britain, Norway, Sweden, and Russia. The *oxycoccus macrocarpus* is the American cranberry; but it is thought to be of inferior quality to the cranberry of northern Europe. Both varieties are largely imported, preserved in spring water.

CRANES, *Tubular*. Among the many applications of the hollow-girder system, this is one of the most ingenious.

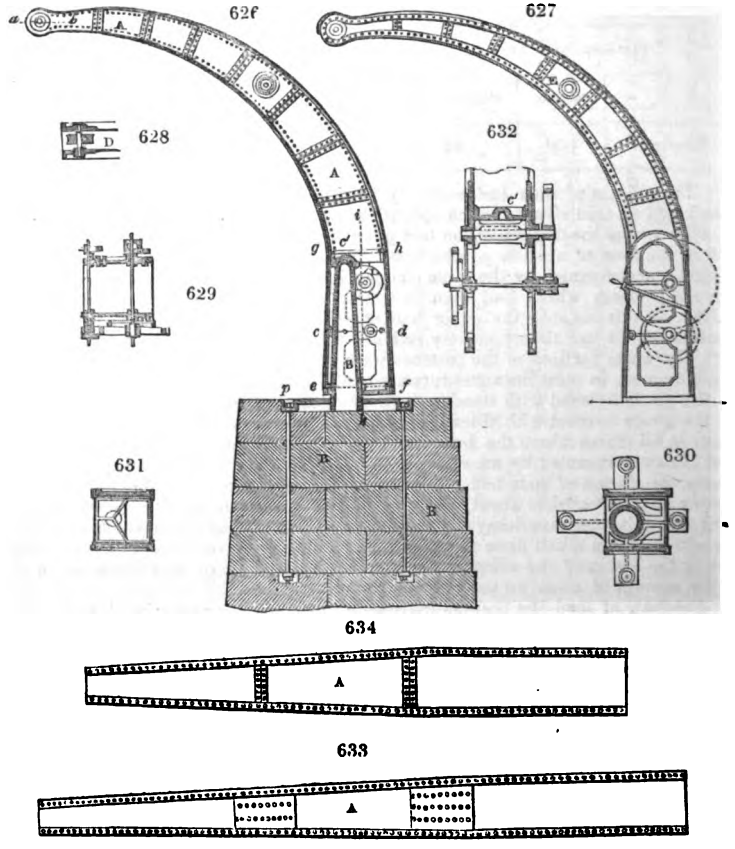

Fig. 626 is a vertical section of a crane, constructed according to a recent invention, and calculated for lifting or hoisting weights up to about 8 tons. *Fig.* 627, is an

Digitized by Google

elevation of the same; *figs.* 628, 629, 630, and 631, are cross sections, on the lines *a b*, *c d*, *e f*, *g h*; and *fig.* 632, a transverse vertical section on the line *i k*. A A is the jib, which in its general outline, is of a crane neck form, but rectangular in its cross-section, as particularly shown in *figs.* 629, 630, and 631. The four sides are formed of metal plates, firmly riveted together. Along the edges the connection of the plates is effected by means of pieces of angle iron. The connections of the plates at the cross-joints on the convex or upper side of the jib, are made by the riveting on of a plate, which covers or overlaps the ends of the two plates to be joined; the rivets at this part are disposed as represented in *fig.* 633 (a plan of the top plates), and known as "chain riveting"; B B is the pillar, which is firmly secured by a base plate *p*, to a stone foundation B; and fits at top into a cup-shaped bearing C, which is so firmly secured to the side plates of the jib, at or near to the point where the curvature commences, and on which bearing the jib is free to revolve. *Fig.* 632 is a transverse vertical section of the lower part of the jib, showing the manner of fitting the bearings for the chain-barrel (which is placed in the interior), and the spindles and shafts of the wheel gearing, by which the power is applied there to D, is the chain pulley, which is inserted in an aperture formed in the top of the jib. The chain passing over this pulley enters the interior of the crane, and is continued down to the chain barrel. E is a pulley or roller, which is interposed about half-way between the chain-pulley and the chain-barrel, for the purpose of preventing the chain rubbing against the plates. *Fig.* 634 is a plan of the lower plates.

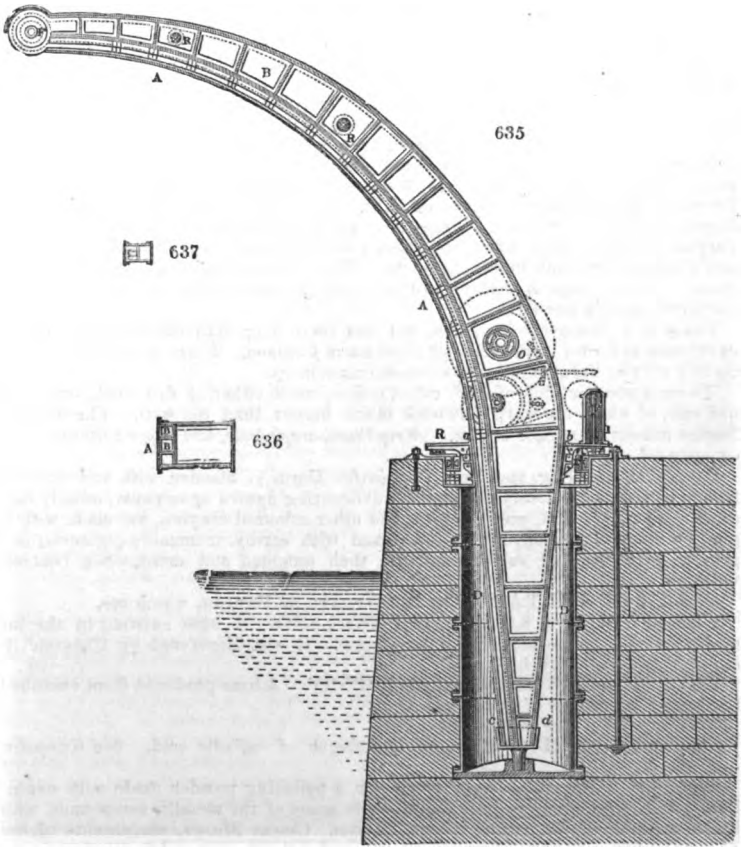

Fig. 635 is a vertical section of another crane constructed upon the same principle as that just described, but calculated for lifting much greater weights (say 20 tons);

Digitized by Google

it differs in having the lower or concave side A A, of the jib strengthened by means of three additional plates B B B, whereby the interior is divided into one large and three smaller cells, as shown in *figs.* 636 and 637, which are cross sections upon the lines *a b*, and *c d* of *fig.* 635. This arrangement of the cells to strengthen the lower or concave side is advisable, in order to obtain sufficient resistance to the compression exerted by the load lifted, without unnecessarily increasing the weight of the other parts. The tension exerted upon the upper or convex plates does not require so much materials to withstand it; C, is the toe of the jib, which rests in a step formed in the bottom of the cylindrical castings D, which is built into the masonry forming the basis of the machine. E E are two of a set of pulleys, which are mounted between two rings F F, and serve as anti-friction rollers for the upper bearing of the jib. The lowermost of the rings F F, rests upon a set of rollers G G, which are fitted into the top of the casting D, so that as the jib is turned round, the rings F F, and the anti-friction rollers which they carry, have perfect freedom to move along with it; H is a platform, upon which the persons working the machine may stand, and which supports a column I, within which there is mounted a spindle K, the lower end of which has keyed to it a pinion L, which gears into a circular rack M M, bolted to the top of the cylindrical casing D. N is a worm-wheel keyed to the top of the spindle K, into which an endless screw, worked by a hand-wheel, is geared, so that, by turning the hand-wheel, the jib of the crane is made to move round in any required direction. O is the chain-barrel; P the chain-wheel; R R pulleys or rollers which support the chain, and prevent its rubbing against the plates of the jib.

In the cranes and hoisting machines described, the chain barrels are inclosed within the jib, and the spindles of the wheel-gearing are also inside; and this is the disposition of these parts preferred; but it will be obvious that they may be also placed outside of the jib, in a manner similarly to that generally followed in the construction of ordinary cranes.

CRAPE. (*Crépe*, Fr.; *Krepp*, Germ.) A transparent textile fabric, somewhat like gauze, made of raw silk, gummed, and twisted at the mill. It is woven with any crossing or tweel. When dyed black, it is worn by ladies as a mourning dress. Crapes are crisped (*crépes*) or smooth; the former being double, are used in close mourning; the latter in less deep. The silk destined for the first is spun harder than for the second; since the degree of twist, particularly for the warp, determines the degree of crisping which it assumes after being taken from the loom. It is for this purpose steeped in clear water, and rubbed with prepared wax. Crapes are all woven and dyed with the silk in the raw state. They are finished with a stiffening of gum water. White crape is appropriated to young unmarried females, and to virgins on taking the veil in nunneries.

Crape is a Bolognese invention, but has been long manufactured with superior excellence at Lyons in France, and Norwich in England. There is now a large manufactory of it at Yarmouth, by power-loom machinery.

There is another kind of stuff, called *crépon*, made either of fine wool, or of wool and silk, of which the warp is twisted much harder than the weft. The *crépons* of Naples consist altogether of silk. *Ærophanes*, *crape-lesse*, and *gauze* are either white or coloured crapes.

CRAYONS. (Eng. and Fr.; *Pastelstifte*, Germ.) Slender, soft, and somewhat friable cylinders, variously coloured for delineating figures upon paper, usually called chalk drawings. Red, green, brown, and other coloured crayons, are made with fine pipe or china clay paste, intimately mixed with earthy or metallic pigments, or in general with body or surface colours, then moulded and dried.—See DRAWING CHALKS.

CREAM OF TARTAR. The BITARTRATE OF POTASH, which see.

CREATINE (Syn. Kreatine), $C^8H^9N^3O^4 + 2HO$. A base existing in the juice of flesh and in urine along with creatinine. It was discovered by Chevreul, but chiefly investigated by Liebig.

CREATININE (Syn. Kreatinine), $C^8H^7N^3O^2$. A base produced from creatine by the loss of two atoms of water.—C. G. W.

CREOSOTE. See KREOSOTE.

CRESYLIC ACID, $C^{14}H^8O^2$.—A homologue of carbolic acid. See KREOSOTE.—C. G. W.

CROCUS. The commercial name for a polishing powder made with oxide of iron. The older chemists gave this name to many of the metallic compounds, which had something of the nature of rust of iron. *Crocus Martis*, sesquioxide of iron; *Crocus Metallorum*, liver of antimony, glass of antimony, oxysulphide of antimony; *Crocus Veneris*, oxide of copper.

CROCUS. A genus of plants belonging to the natural order of *Tridaceæ*. The *Crocus Sativus* is the species from which the saffron of commerce is produced. The

Digitized by Google

stigmata of the flowers are of a deep orange colour, and these, when dried in the loose state, form *hay saffron;* when compressed it forms the *cake saffron.* Saffron is cultivated in Cambridgeshire; it is also imported from Sicily, France, and Spain; but English saffron is always preferred.

CROSS COURSE. A mining term. See MINING.

CROSS CUT. A mining term. See MINING.

CROSS-FLUCKANS or FLOOKANS. The name given by the Cornish miners to clay veins crossing the mineral lodes. See FLOOKAN.

CROTTLES. A name given to certain lichens in Scotland which are used for dying woollen stuffs brown.

CROWN GLASS. See GLASS.

CRUCIBLES (*Creusets*, Fr.; *Schmelztiegel*, Germ.) are small conical vessels, narrower at the bottom than the mouth, for reducing ores in docimasy by the dry analysis, for fusing mixtures of earthy and other substances, for melting metals, and compounding metallic alloys. They ought to be refractory in the strongest heats, not readily acted upon by the substances ignited in them, not porous to liquids, and capable of bearing considerable alternations of temperature without cracking; on which account they should not be made too thick.—See MELTING POTS.

CRUSHING AND GRINDING MACHINERY. See GRINDING AND CRUSHING MACHINERY.

CRYOLITE. The mineral from which the metal Aluminium was obtained. It derives its name from κρυος *ice*,—from the circumstance of its being fusible in the flame of a candle. Its composition is—aluminium 13·00; sodium 32·8; fluorine 54·2. It was discovered at Arksutfiord in West Greenland, by Giesécke, associated in gneiss with galena, pyrites, and spathic iron. It is now obtained in large quantities. See ALUMINIUM.

CRYPTIDINE, $C^{22}H^{11}N$. A volatile base homologous with chinoline, found by Greville Williams in the less volatile portion of coal tar.—C. G. W.

CRYSTAL. A crystal is a body which has assumed a certain geometric form. It is produced by nature, and may be obtained by art.

The ancients believed quartz to be water converted into a solid by intense cold, and hence they called that mineral *crystal* from κρυσταλλος, *ice*. This belief still lingers, many persons thinking that *rock crystal* is, in fact, congealed water. The term *crystal* is now applied to all solid bodies which assume certain regular forms. A crystal is any solid bounded by plane surfaces symmetrically arranged. Each mineral has its own mode of crystallisation, by which it may be distinguished, and also its own peculiarity of *internal structure*.

We may have a mineral in a considerable variety of external forms, as *pyrites*, in cubes, octohedrons, dodecahedrons, &c.; but these are all resolvable into a simple single type—the cube. Thus *galena*, whatever external form it may assume, has an internal cubical structure. Fluor spar, usually occurring in cubical forms, may be cleaved into a regular octohedron. A little reflection, will enable the student to see that nature in her simple arrangements maintains an unvarying internal type, upon which she builds up her varying and beautiful geometric forms. There are certain imaginary lines which are called the axes of the crystal: these may be

Rectangular and equal, as in the cube.

Rectangular and one unequal, as in the right square prism.

Rectangular amd three unequal, as in the right rectangular prism.

The three axes unequal, vertical inclined to one of the lateral, at right angles to the other, two lateral at right angles with one another, as in the oblique rhombic prism.

The three axes unequal and all the intersections oblique, as in the oblique rectangular prism.

Three equal lateral axes intersecting at angles of 60° *and a vertical axis of varying length at right angles with the lateral*, as in the hexagonal prism.

Upon these simple arrangements of the axial lines all the crystalline forms depend, the particles of matter arranging themselves around these axes according to some law of polarity which has not yet been developed.

CRYSTAL. A name given to FLINT GLASS, which see.

CUBE ORE. A variety of native arseniate of copper, found sometimes in Cornwall and in Cumberland.

CUDBEAR. This colouring matter was first made an article of trade by Dr. Cuthbert Gordon, from whom it derived its name; and was originally manufactured on a great scale by Mr. G. Mackintosh, at Glasgow, nearly 80 years ago.

It is prepared in the same manner as archil, from the same varieties of lichen (see ARCHIL); only, towards the end of the process, the substance is dried in the air, and is then ground to a very fine powder. See LITMUS.

Digitized by Google

CULM, a term applied to anthracite or stone coal in some districts. It is still used in parliamentary returns. See ANTHRACITE.

CUMIDINE, $C^{18}H^{13}N$. An alkali homologous with aniline, formed by Nicholson by the action of reducing agents on nitrocumole. Its density is 0·9526, and its boiling point 437°.—C. G. W.

CUMIN SEED. The fruit of the *Cuminum Cyminum*. This plant is much cultivated in Sicily and Malta for the sake of the seeds. These have a warm aromatic taste, and a strong and rather agreeable smell. The Dutch sometimes flavour their cheese with cumin seed. In Germany they are put into bread; and in this country they are employed to flavour curries.

CUMOLE, $C^{18}H^{12}$ (Syn. Cumène), Hydruret of Cumenyle. A hydrocarbon found in coal naptha; it is also produced by the destructive distillation of cuminic acid with caustic baryta. See NAPHTHA, COAL, and CARBURETTED HYDROGEN.—C. G. W.

CUPEL. A shallow cup made of bone ashes.

CUPELLATION. See ASSAYING and SILVER REFINING.

CUPREOUS MANGANESE. See MANGANESE.

CURACOA. A Dutch liqueur flavoured with Seville orange peel, cinnamon, and mace. See LIQUEURS.

CURARINE. An alkaloid existing in a black resinous matter called curari, used by the American Indians for poisoning their arrows. It is singular that while the curari poison is absolutely fatal when introduced, even in small doses, into a wound, it is inert when swallowed. Its composition is unknown, but it appears to be produced from one of the *Strychneæ*.—C. G. W.

CURCUMA ANGUSTIFOLIA. *The narrow leaved Turmeric.* (East Indian Arrow Root.) This plant is found in the forests, extending from the banks of the Lona to Nagpore. At Bhagulpore the root is dug up and rubbed on a stone or bed in a mortar, and afterwards rubbed in water with the hand and strained through a cloth; the fecula having subsided, the water is poured off, and the tikor (fecula) dried for use. The East Indian arrow root is a fine white powder, readily distinguishable, both by the eye and the touch, from West Indian arrow root. To the eye it somewhat resembles a finely powdered salt (as bicarbonate of soda or Rochelle salt). When pinched or pressed by the fingers, it wants the firmness so characteristic of West Indian arrow root, and it does not crepitate to the same extent when rubbed between the fingers.—*Pereira.*

At Travancore this starch forms a large portion of the diet of the inhabitants.

CURLING STONE. A stone used in Scotland in playing the national game of *curling*, which is practised upon the ice during the winter. The stone is made of some hard primary rock. That of Ailsa Craig, in the Firth of Clyde, is very celebrated. Ailsa Craig consists of a single rock of greyish compact felspar, with small grains of quartz, and very minute particles of hornblende.—*Bristow.*

CURRANT. The fruit of the *Ribes rubrum* and *Ribes nigrum*. The name currant is derived from the similarity of the fruit to that of the Corinth raisins, or small grape of Zante, which are commonly called *corinths* or *currants*.

CURRY. A seasoning originally prepared in the East Indies. The following are excellent recipes for curry:—

Coriander seeds powdered	- - - - - -	3 ounces
Black pepper	„ - - - - - -	5 „
Cayenne pepper	„ - - - - - -	1 „
Fenegric seeds	„ - - - - - -	3 „
Cumin seeds	„ - - - - - -	3 „
Turmeric root	„ - - - - - -	6 „

To be thoroughly well mixed together.

Coriander seeds powdered	- - - - - -	½ a pound
Fenegric seeds	„ - - - - - -	
Cumin seeds	„ of each - - - - -	2 ounces
Black pepper	„ - - - - -	
Turmeric root	„ of each - - - - -	4 ounces
Cayenne pepper	„ - - - - -	6 drachms
Ginger root	„ - - - - -	1 ounce

Well mix.

CURRYING OF LEATHER (*Corroyer*, Fr.; *Zurichten*, Germ.,) is the art of dressing skins after they are tanned, in order to render them fit for the purposes of the shoe-maker, coach-maker, harness-maker, &c. See LEATHER, CURRYING OF.

CUSCUS ROOT. A grass which yields a fragrant essential oil, called vitever.

CUSPARIA BARK. The bark of a South American tree, the *Galipea Cusparia*, much esteemed for its medicinal properties.

CUTTLE FISH. See SEPIA.

Digitized by Google

CUTLERY. (*Coutellerie* Fr. ; *Messerschmidwaare*, Germ.) Three kinds of steel are made use of in the manufacture of different articles of cutlery, viz., common steel, shear steel, and cast steel. Shear steel is exeeedingly plastic and tough. All the edge tools which require great tenacity without great hardness are made of it, such as table knives, scythes, plane-irons, &c.

Cast steel is formed by melting blistered steel in covered crucibles, with bottle glass, and pouring it into cast-iron moulds, so as to form it into ingots: these ingots are then taken to the tilt, and drawn into rods of suitable dimensions. No other than cast steel can assume a very fine polish, and hence all the finer articles of cutlery are made of it, such as the best scissors, penknives, razors, &c.

Formerly cast steel could be worked only at a very low heat; it can now be made so as to be welded to iron with the greatest ease. Its use is consequently extended to making very superior kinds of chisels, plane-irons, table-knives, &c.

Forging of table knives.—Two men are generally employed in the forging of table knives ; one called the foreman or maker, and the other the striker.

The steel called common steel is employed in making the very common articles; but for the greatest part of table knives which require a surface free from flaws, shear steel and cast steel are generally preferred. That part of the knife termed the blade is first rudely formed and cut off. It is next welded to a rod of iron about ½ inch square, in such a manner as to leave as little of the iron part of the blade exposed as possible. A sufficient quantity of the iron now attached to the blade is taken off from the rod to form the bolster or shoulder, and the tang.

In order to make the bolster of a given size, and to give it at the same time shape and neatness, it is introduced into a die, and a swage placed over it; the swage has a few smart blows given it by the striker. This die and swage are, by the workmen, called prints.

After the tangs and bolster are finished, the blade is heated a second time, and the foreman gives it its proper anvil finish : this operation is termed smithing. The blade is now heated red hot, and plunged perpendicularly into cold water. By this means it becomes hardened. It requires to be tempered regularly down to a blue colour: in which state it is ready for the grinder.

Mr. Brownill's method of securing the handles upon table knives and forks, is, by lengthening the tangs, so as to pass them completely through the handle, the ends of which are to be tinned after the ordinary mode of tinning iron ; and, when passed through the handle, the end of the tang is to be spread by beating, or a small hole drilled through it, and a pin passed to hold it upon the handle. After this, caps of metal, either copper plated, or silver, are to be soldered on the projecting end of the tang, and while the solder is in a fluid state, the cap is to be pressed upon the end of the handle and held there until the solder is fixed, when the whole is to be cooled by being immersed in cold water.

Mr. Thomason's patent improvements consist in the adaptation of steel edges to the blades of gold and silver knives. These steel edges are to be attached to the other metal, of whatever quality it may be, of which the knife, &c., is made, by means of solder, in the ordinary mode of effecting that process. After the edge of steel is thus attached to the gold, silver, &c., it is to be ground, polished, and tempered by immersion in cold water, or oil, after being heated. This process being finished, the other parts of the knife are then wrought and ornamented by the engraver or chaser, as usual.

A patent was obtained in 1827, by Mr. Smith of Sheffield, for rolling out knives at one operation.

In the ordinary mode of making knives, a sheet of steel being provided, the blades are cut out of the sheet, and the backs, shoulders, and tangs, of wrought iron, are attached to the steel blades, by welding at the forge. The knife is then ground to the proper shape, and the blade polished and hardened.

Instead of this welding process, the patentee proposes to make the knives entirely of steel, and to form them by rolling in a heated state between massive rollers ; the shoulders or bolsters, and the tangs for the handles being produced by suitable recesses in the peripheries of the rollers ; just as railway rails are formed. When the knife is to be made with what is called a scale tang, that is, a broad flat tang, to which the handle is to be attached in two pieces, riveted on the sides of the tang, the rollers are then only to have recesses cut in them, in a direction parallel to the axis for forming the bolster.

The plate of steel having been heated, is to be pressed between the two rollers, by which the blades and the parts for the scale tangs will be pressed out flat and thin, and those parts which pass between the grooves or recess will be left thick or protuberant, forming the bolster for the shoulder of the blade. But if the tangs are to be round in order to be fixed into single handles, then it will be necessary also to form

Digitized by Google

transverse grooves in the rollers, that is, at right angles to those which give shape to the bolsters, the transverse grooves corresponding in length to the longth of the intended tang. When the plates of steel have been thus rolled, forming three or more knives in a breadth, the several knives are to be cut out by the ordinary mode of what is called slitting, and the blades and shoulders ground, hardened, and polished in the usual way.

Forks are generally a distinct branch of manufacture from that of knives, and are purchased of the fork makers by the manufacturers of table knives, in a state fit for receiving the handles.

The rods of steel from which the forks are made, are about $\frac{3}{8}$ths of an inch square. The tang and shank of the fork are first roughly formed. The fork is then cut off, leaving at one end about 1 inch of the square part of the steel. This part is afterwards drawn out flat to about the length of the prongs. The shank and tang are now heated, and a proper form given to them by means of a die and swage. The prongs are afterwards formed at one blow by means of the stamp; this machine is very similar to that used in driving piles, but it is worked by one man. It consists of a large anvil fixed in a block of stone nearly on a level with the ground. To this anvil are attached two rods of iron of considerable thickness, fixed 12 inches asunder, perpendicularly to the anvil, and diagonally to each other. These are fastened to the ceiling The hammer or stamp, about 100 lbs. in weight, having a groove upon either side corresponding to the angles of the upright rods, is made to slide freely through its limited range, being conducted by its two iron supporters. A rope is attached to the hammer, which goes over a pulley on the floor of the room above, and comes down to the person who works the stamp: two corresponding dies are attached, one to the hammer, and the other to the anvil. That part of the fork intended to form the prongs, is heated to a pretty white heat and placed in the lower die, and the hammer containing the other die is made to fall upon it from a height of about 7 or 8 feet. This forms the prongs and the middle part of the fork, leaving a very thin substance of steel between each prong, which is afterwards cut out with an appropriate instrument called a fly-press. The forks are now annealed by surrounding a large mass of them with hot coals, so that the whole shall become red hot. The fire is suffered gradually to die out, and the forks to cool without being disturbed. This process is intended to soften, and by that means to prepare them for filing. The inside of the prongs are then filed, after which they are bent into their proper form and hardened. When hardened, which is effected by heating them red-hot and plunging them into cold water, they are tempered by exposing them to the degree of heat at which grease inflames.

Penknives are generally forged by a single hand, with the hammer and the anvil simply.

The hammer in this trade is generally light, not exceeding $3\frac{1}{2}$ lbs. The breadth of the face, or the striking part, is about one inch; if broader, it would not be convenient for striking so small an object. The principal anvil is about 5 inches, and 10 upon the face, and is provided with a groove into which a smaller anvil is wedged. The smaller anvil is about 2 inches square upon the face. The blade of the knife is first drawn out at the end of the rod of steel, and as much more is cut off along with it as is thought necessary to form the joint. The blade is then taken in a pair of tongs, and heated a second time to finish the joint part, and at the same time to form a temporary tang for the purpose of driving into a small haft used by the grinder. Another heat is taken to give the blade a proper finish. The small recess called the nail hole, used in opening the knife, is made while it is still hot by means of a chisel, which is round on one side, and flat upon the other.

Penknives are hardened by heating the blade red hot, and dipping them into water up to the shoulder. They are tempered by setting them side by side, with the back downwards upon a flat iron plate laid upon the fire, where they are allowed to remain till they are of a brown or purple colour.

The blades of pocket knives, and all that come under the denomination of spring knives, are made in the same way.

The forging of razors is performed by a foreman and striker, as in making table knives.

They are generally made of cast steel. The rods, as they come from the tilt, are about $\frac{1}{2}$ inch broad, and of a thickness sufficient for the back of a razor.

There is nothing peculiar in the tools made use of in forging razors: the anvil is a little rounded at the sides, which affords the opportunity of making the edge thinner, and saves an immense labour to the grinder.

Razors are hardened and tempered in a similar manner to penknives. They are, however, left harder, being only let down to yellow or brown colour.

The forging of scissors is wholly performed by the hammer, and all the sizes are

Digitized by Google

made by a single hand. The anvil of the scissor-maker weighs about 1½ cwt.; it measures, on the face, about 4 by 11 inches. It is provided with two gates or grooves for the reception of various little indented tools termed by the workmen bosses: one of these bosses is employed to give proper figure to the shank of the scissors; another for forming that part which has to make the joint; and a third is made use of for giving a proper figure to the upper side of the blade. There is also another anvil placed on the same block, containing two or three tools called beak-irons, each consisting of an upright stem about 6 inches high, at the top of which a horizontal beak projects; one of these beaks is conical, and is used for extending the bow of the scissors; the other is a segment of a cylinder with the round side upwards, containing a recess for giving a proper shape and smoothness to the inside of the bow.

The shank of the scissors is first formed by means of one of the bosses, above described, leaving as much steel at the end as will form the blade. A hole is then punched about ¼ inch in width, a little above the shank. The blade is drawn out and finished, and the scissors separated from the rod a little above the hole. It is heated a third time, and the small hole above mentioned is extended upon the beak-irons so as to form the bow. This finishes the forging of scissors. They are promiscuously made in this way, without any other guide than the eye, having no regard to their being in pairs. They are next annealed for the purpose of filling such parts of them as cannot be ground, and afterwards paired.

The very large scissors are made partly of iron, the blades being of steel.

After the forging, the bow and joints, and such shanks as cannot be ground, are filed. The rivet hole is then bored, through which they are to be screwed or riveted together. This common kind of scissors is only hardened up to the joint. They are tempered down to a purple or blue colour. In this state they are taken to the grinder.

Grinding and polishing of cutlery.—The various processes which come under this denomination are performed by machinery, moving in general by the power of the steam-engine or water-wheel.

Grinding wheels or grinding mills are divided into a number of separate rooms; every room contains six places called troughs; each trough consists of a convenience for running a grindstone and a polisher at the same time, which is generally occupied by a man and a boy.

The business of the grinder is generally divided into three stages, viz. grinding, glazing, and polishing.

The grinding is performed upon stones of various qualities and sizes, depending on the articles to be ground. Those exposing much flat surface, such as saws, fenders, &c, require stones of great diameter, while razors, whose surface is concave, require to be ground upon stones of very small dimensions. Those articles which require a certain temper, which is the case with most cutting instruments, are mostly ground on a wet stone; for which purpose the stone hangs within the iron trough, filled with water to such a height that its surface may just touch the face of the stone.

Glazing is a process following that of grinding: it consists in giving that degree of lustre and smoothness to an article which can be effected by means of emery of various degrees of fineness. The tool on which the glazing is performed, is termed a glazer. It consists of a circular piece of wood, formed of a number of pieces in such a manner that its edge or face may always present the endway of the wood. Were it made otherwise, the contraction of the parts would destroy its circular figure. It is fixed upon an iron axis similar to that of the stone. Some glazers are covered on the face with leather, others with metal, consisting of an alloy of lead and tin; the latter are termed caps. In others, the wooden surface above is made use of. Some of the leather-faced glazers, such as are used for forks, table knives, edge tools, and all the coarser polished articles, are first coated with a solution of glue, and then covered with emery. The surfaces of the others are prepared for use by first turning the face very true, then filling it with small notches by means of a sharp-ended hammer, and lastly filling up the interstices with a compound of tallow and emery.

The pulley of the glazer is so much less than that of the stone, that its velocity is more than double, having in general a surface-speed of 1500 feet in a second.

The process of polishing consists in giving the most perfect polish to the different articles. Nothing is subjected to this operation but what is made of cast steel, and has been previously hardened and tempered.

The polisher consists of a circular piece of wood covered with buff leather, the surface of which is covered from time to time, while in use, with the crocus of iron, called also colcothar of vitriol.

The polisher requires to run at a speed much short of that of the stone, or the glazer. Whatever may be its diameter, the surface must not move at a rate exceeding 70 or 80 feet in a second.

Digitized by Google

CYANATES. The combinations of the various bases with cyanic acid (C^2HNO^2). The cyanate of potash, C^2NKO^2 is employed for the preparation of artificial urea. There are two modes of preparing cyanate of potash, both of which yield a good product. The first is that of Clemm, the second of Liebig. 1. 8 parts of ferrocyanide of potassium and 3 parts of carbonate of potash are intimately mixed and fused, care being taken not to urge the heat too much. The fluid mass is allowed to fall somewhat in temperature, but not to such an extent as to solidify; 15 parts of red lead are then added by small portions. The crucible is now to be reheated with stirring, then removed, and the contents poured on to a clean iron plate. 2. The cyanide of potassium of commerce (prepared by the method described in the article under that head) is to be melted in an iron crucible or ladle, and 3¼ parts of dry litharge in fine powder are to be added with constant stirring. When the lead has all collected at the bottom, the whole is poured on to an iron plate. The mass obtained by either of the above processes is to be reduced to powder, and boiled with repeated quantities of alcohol, until no more cyanate is extracted. This may be known when the alcohol filtered from the residue no longer yields crystals of cyanate in cooling. —C. G. W.

CYANHYDRIC ACID. See HYDROCYANIC ACID.

CYANIDES. The combinations of cyanogen with metals or other bodies. It has been remarked in the article HYDROCYANIC ACID that cyanogen, C^2N, is a compound salt radical, analogous to the halogens chlorine, iodine, and bromine. Like the latter it unites with metals without the intervention of oxygen, and with hydrogen to form a hydracid corresponding to the hydrochloric, hydriodic, and hydrobromic acids. The cyanides are both an important and interesting class of salts. The most important is the cyanide of potassium. The latter is formed under a great variety of circumstances, especially where carbonate of potash is heated in contact with carbonaceous matters. The nitrogen to form the cyanide in the greater number of instances is principally, and in a few entirely, derived from the atmosphere. Many chemists have experimented on this subject, and their results are by no means in harmony; but thus much is certain, that success or failure depends solely upon the circumstances under which the experiments are conducted. It has been shown that, when carbonate of potash mixed with charcoal prepared from sugar (see CARBON) is exposed to a very high temperature in a current of nitrogen gas, the potash in the carburet is, at times, absolutely converted into cyanide, not a trace of carbonic acid remaining. Experiments of this class, when made with animal charcoal or coal, are less conclusive because those matters contain nitrogen. But even then the amount of cyanogen found is out of proportion to the quantity of nitrogen in the coal or other carbonaceous matters. In fact it would seem that the presence of a certain quantity of nitrogen in the coal, &c., exercises a predisposing tendency on the nitrogen of the air so as to induce its combination with carbon with greater facility than would be the case if pure carbon were employed. Cyanide of potassium has been found on more than one occasion oozing from apertures in iron smelting furnaces. In fact it is produced in such abundance at one furnace in Styria as to send into the market for sale to electro-platers. Cyanide of potassium is largely prepared for the use of electro-platers and gilders. The proportions of the materials used are those of Liebig, who first made known the process. The modes of munipulation, however, differ in the details in all laboratories. The following method can be recommended from the experience of the author of this article as giving a white and good product. It can, moreover, be worked on a very large scale. The ferrocyanide of potassium and salt of tartar are to be separately dried, pulverised, and sifted through cane sieves. The salt of tartar must be free from sulphates. To 8 parts of dry ferrocyanide of potassium 3 of dry salt of tartar are to be added, and the two are to be incorporated by sifting. A large and strong iron pot is then to be suspended by a chain from a crane in such a position that it can be lowered into the furnace and raised with ease; there must also be an arrangement to enable the pot to be arrested at any desired height. The pot being heated to redness, the mixture is to be thrown in by small portions until the vessel is half full; the heat being allowed to rise gradually until the whole flows pretty quietly. During the fusion the contents are to be stirred with a clean iron rod to promote the aggregation of the spongy sediment As soon as the rod, on being dipped into the fused mass and removed, brings with it a pure white porcelain like product, the operation may be regarded as terminated, and the pot is to be raised from the fire by means of the crane and sling in a slightly inclined position. One of the operators now holds a large clean iron ladle under the edge of the pot, while another elevates the latter with the aid of tongs, so that the ladle becomes filled. The contents of the first ladle are then poured off into another held by the assistant who tilted the pot. The latter then pours the contents of his ladle into a large shallow and brilliantly clean brass basin standing in another containing a little water so as to cool the fused cyanide rapidly. Extreme care must

Digitized by Google

be taken to prevent even the smallest drop of water from finding its way into the brass vessel, because on the hot cyanide coming in contact with it an explosion would occur, scattering it in every direction to the great danger of the persons in the vicinity. The two ladles are to be kept very hot, by being held over the fire until wanted, in order to prevent the cyanide from chilling until it is poured into the brass basin. The latter should be about 18 inches in diameter and 1½ deep. It should be quite flat bottomed. The object of so many pourings off is to prevent any of the sediment from finding its way into the product, and thus causing black specks in it. The pot on being emptied as far as convenient, is to have the sediment removed and a fresh charge inserted. As soon as the coke of cyanide is cool, it is to be broken up into moderate sized pieces and placed in dry and well closed jars.

The cyanide of potassium possesses great points of interest for the technical and theoretical chemist. It is the salt from which an immense number of compounds of importance may be obtained. Very large quantities are made for the purpose of preparing the auro- and argento- cyanides of potassium for the electro-platers and gilders.

Auro-cyanide of potassium is capable of being formed in several ways. The following are convenient processes. The selection of a mode of preparing it will depend upon the circumstances under which the operation is situated. 1. By the battery. This process is perhaps the most generally convenient and economical for the electro-gilder. A bath is prepared by dissolving the best commercial cyanide of potassium in good filtered or distilled water. The best salt is that sold under the name of "gold cyanide." A Daniell's battery of moderate size being charged, two plates of gold are attached to wires and connected with it. The larger, which is to be dissolved, is attached to the positive, and the smaller, which need be but the size of a flattened wire, to the negative pole. The action of the battery is kept up until the desired amount is dissolved. It is easy to remove the plate used, dry and weigh it at intervals so as to know the proper time to stop the operation. 2. Teroxide of gold (prepared with magnesia) is to be dissolved in a solution of cyanide of potassium.

Argento-cyanide of potassium. This solution is easily prepared for the electro-plater by the following process. Metallic silver is dissolved in nitric acid and the solution evaporated to dryness. The residue is dissolved in distilled water and filtered. To the solution cyanide of potassium, dissolved in distilled water, is added as long as precipitation takes place, but no longer. The precipitate is filtered off on calico strainers, and well washed with distilled water. It is then to be dissolved in solution of cyanide of potassium and diluted to the desired strength. The solution is frequently dark coloured at first, but it becomes colourless in a few hours, and should then be filtered from a small black precipitate which will be obtained. Many operators neglect the filtration and washing of the precipitated cyanide of silver, and merely continue the addition of the solution of cyanide of potassium to the nitrate of silver until the precipitate at first formed is re-dissolved. The first method is however to be preferred. Some, instead of precipitating with cyanide of potassium, do so with solution of common salt, and then, after washing off the precipitated chloride of silver, dissolve it in cyanide of potassium. Argento-cyanide of potassium can also be prepared with the battery by the process mentioned under auro-cyanide of potassium; this method is so convenient where the proper apparatus is at hand, that few professional electro-platers would use any other method. Daguerreotype artists who silver their plates, or, rather, re-silver them, would find the battery process too cumbersome, and should therefore use a solution of argento-cyanide of potassium prepared by the first method.

637*

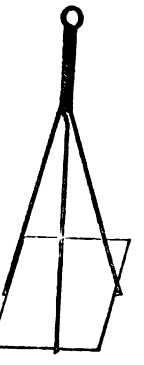

In order to suspend Daguerreotype plates in the bath, the little contrivance figured in the margin, *fig.* 637*, will be found most convenient. It merely consists of pieces of copper wire twisted together and formed into a grapnell at the lower end. It acts like a spring, and holds the plates so firmly that there is no fear of its falling out even if the apparatus be subjected to severe vibration.—C. G. W.

CYANIDES (FERRO). See FERROCYANIDES.

CYANIDE OF POTASSIUM. See CYANIDES.

CYANINE. A name given to *Chinoleine blue*: which see.

CYANOGEN, C^2N. A compound salt radical, analogous in its character to chlorine and the other halogens. It was the first body discovered possessing the characters of a compound radical, and the investigations made upon it and its derivations have thrown more light upon the constitution and proper mode of classifying organic substances than any other researches whatever. In consequence of its acting in all its compounds as if it were a simple body or element,

Digitized by Google

chemists generally have acquired the habit of designating it by the symbol Cy. Like the haloids it combines with hydrogen to form an acid, and with metals, without the necessity for the presence of oxygen. For a few illustrations of its analogies with chlorine, &c., see HYDROCYANIC ACID. In the article CYANIDES several of the conditions under which it is formed have also been pointed out. The modern French chemists of the school of Gerhardt very justly regard cyanogen in the light of a double molecule, thus, Cy Cy, or C^4N^2. The reason of this is because most of the phenomena of organic chemistry are more easily explained by the use of four-volume formulæ than any others. This latter mode of condensation has been shown by M. Wurtz, in his admirable work on the compound radicals, to undoubtedly exist in the case of radicals belonging to the strict hydrogen type, not as ethyle and its homologues; and numerous theoretical and experimental results are in favour of the supposition that all radicals in the free state are binary groups.

If we assume the truth of the above hypothesis, we shall regard cyanogen in the free state as a cyanide of cyanogen, analogous to hydrocyanic acid, which is a cyanide of hydrogen.

Cyanogen may very conveniently be prepared by heating cyanide of mercury in a retort of hard glass. A considerable quantity of the gas is given off, but a portion remains behind in the state of paracyanogen. The latter substance is a black matter, the constitution of which is by no means understood. It has, however, the same composition in the hundred parts as cyanogen itself, and is therefore isomeric with it.

Cyanogen is a colourless combustible gas with a sharp odour. Its density is 1·81. Hauy requires for two volumes 1·80. If cooled to a temperature of between —13° and —22° F., it liquefies into a transparent, colourless, and very mobile fluid having a specific gravity of 0·866. A little below 22° the fluid congeals to a mass resembling ice. The flame of cyanogen is of a pale purple or peach blossom colour.

Some of the properties of cyanogen are very remarkable, and quite distinct from those of the true halogens. For instance, it combines directly with aniline to produce a body having basic properties. The latter is called cyaniline, and is formed by the coalescence of two molecules of cyanogen with two of aniline, the resulting formula being, consequently, $C^{28}H^{14}N^4$. There are a variety of singular compounds produced by the action of cyanogen and its halogen compounds upon aniline; they have been studied with remarkable skill by Hofmann.—C. G. W.

CYDER (*Cidre*, Fr.; *Apfelwein*, Germ.); the vinous fermented juice of the apple. The ancients were acquainted with cyder and perry, as we learn from the following passage of Pliny the naturalist: "Wine is made from the Syrian pod, from pears and apples of every kind." (Book xiv. chap. 19.) The term cyder or *cidre* in French, at first written *sidre*, is derived from the latin word *sicera*, which denoted all other fermented liquors except grape wine. Cyder seems to have been brought into Normandy by the Moors of Biscay, who had preserved the use of it after coming into that country from Africa. It was afterwards spread through some other provinces of France, whence it was introduced into England, Germany, and Russia. It is supposed that the first growths of Normandy afford still the best specimens of cyder. Devonshire and Herefordshire are the counties of England most famous for this beverage.

Strong and somewhat elevated ground, rather dry, and not exposed to the air of the sea, or to high winds, are the best situations for the growth of the cyder apple. The fruit should be gathered in dry weather. The juice of apples is composed of a great deal of water; a little sugar analogous to that of the grape; a matter capable of causing fermentation with contact of air; a pretty large proportion of mucilage, with malic acid, acetic acid, and an azotised matter in a very small quantity. The seeds contain a bitter substance and a little essential oil; the pure parenchyma or cellular membrane constitutes not more than two per cent. of the whole. After the apples are gathered, they are left in the barn-loft for fifteen days or upwards to mellow; some of them in this case, however, become soft and brown. This degree of maturation diminishes their mucilage, and developes alcohol and carbonic acid; in consequence of which the cyder suffers no injury. There is always, however, a little loss; and if this ripening goes a little further it is very apt to do harm, notwithstanding the vulgar prejudice of the country people to the contrary. Too much care, indeed, cannot be taken to separate the sound from the spoiled apples; for the latter merely furnish an acid leaven, give a disagreeable taste to the juice, and hinder the cyder from fining, by leaving in it a certain portion of the parenchyma, which the gelatinous matter or the fermentation has diffused through it. Unripe apples should be separated from the ripe also, for they possess too little saccharum to be properly susceptible of the vinous fermentation.

Where cyder-making is scientifically practised, it is prepared by crushing the apples in a mill with revolving edge-stones, turned in a circular stone cistern by one or two horses. When the fruit is half mashed, about one-fifth of its weight of river water is added.

Digitized by Google

In some places a mill composed of two cast-iron fluted cylinders placed parallel to each other under the bottom of a hopper, is employed for crushing the apples. One of the cylinders is turned by a winch, and communicates its motion in the opposite direction by means of the flutings working into each other. Each portion of the fruit must be passed thrice through this rude mill in order to be sufficiently mashed; and the same quantity of water must be added as in the edge stone mill.

After the apples are crushed they are usually put into a large tub or tun for 12 or 24 hours. This steeping aids the separation of the juice, because the fermentative motion which takes place in the mass breaks down the cellular membranes; but there is always a loss of alcohol carried off by the carbonic acid disengaged, while the skins and seeds develope a disagreeable taste in the liquid. The vatting might be suppressed if the apples were so comminuted as to give out their juice more readily.

After the vatting, the mashed fruit is carried to the press and put upon a square wicker frame or into a hair bag, sometimes between layers of straw, and exposed stratum super stratum to strong pressure till what is called a cheese or cake is formed. The mass is to be allowed to drain for some time before applying pressure, which ought to be very gradually increased. The juice which exudes with the least pressure affords the best cyder; that which flows towards the end acquires a disagreeable taste from the seeds and the skins. The must is put into casks with large bungholes, where it soon begins to exhibit a tumultuous fermentation. The cask must be completely filled, in order that all the light bodies suspended in the liquid when floated to the top by the carbonic acid may flow over with the froth; this means of clearing cyder is particularly necessary with the weak kinds, because it cannot be expected that these matters in suspension will fall to the bottom of the casks after the motion has ceased. In almost every circumstance besides, when no saccharine matter has been added to the must, that kind of yeast which rises to the top must be separated, lest by precipitation it may excite an acid fermentation in the cyder. The casks are raised upon gauntrees or stillions, in order to place flat tubs below them to receive the liquor which flows over with the froth. At the end of 2 or 3 days for weak cyders, which are to be drunk somewhat sweet, of 6 or 10 days or more for stronger cyders, with variations for the state of the weather, the fermentation will be sufficiently advanced, and the cyder may be racked off into other casks. Spirit puncheons preserve cyder better than any other, but in all cases the casks should be well seasoned and washed. Sometimes a sulphur match is burned in them before introducing the cyder, a precaution to be generally recommended, as it suspends the activity of the fermentation, and prevents the formation of vinegar.

The cyder procured by the first expression is called cyder without water. The cake remaining in the press is taken out, divided into small pieces, and mashed anew, adding about half the weight of water, when the whole is carried back to the press and treated as above described. The liquor thus obtained furnishes a weaker cyder which will not keep, and therefore must be drunk soon.

The cake is once more mashed up with water, and squeezed, when it yields a liquor which may be used instead of water for moistening fresh ground apples.

The processes above described, although they have been long practised, and have therefore the stamp of ancestral wisdom, are extremely defective. Were the apples ground with a proper rotatory rasp which would tear all their cells asunder, and the mash put through the hydraulic press in bags between hurdles of wicker-work, the juice would be obtained in a state of perfection fit to make a cyder superior to many wines. An experimental process of this kind has been actually executed in France upon a considerable scale, with the best results. The juice had the fine flavour of the apple, was fermented by itself without any previous fermentation in the mash, and afforded an excellent strong cyder which kept well.

When the must of the apples is weak or sour, good cyder cannot be made from it without the addition of some saccharine matter. The syrup into which potato farina is convertible by *diastase* (saccharine ferment, see STARCH and SUGAR), would answer well for enriching poor apple juice.

The value of apples to produce this beverage of good quality is proportionate to the specific gravity of their juice. M. Couverchel has given the following table, illustrative of that proposition:—

Juice of the green renette, queen apple (*reinette verte*)	1094
English renette	1080
Red renette	1072
Musk renette	1069
Fouillet rayé	1064
Orange apple	1063
Renette of Caux	1060
Water	1000

Digitized by Google

Cyder apples may be distributed into three classes, the sweet, the bitter, and the sour. The second are the best; they afford a denser juice, richer in sugar, which clarifies well, and when fermented keeps a long time; the juice of sweet apples is difficult to clarify; but that of the sour ones makes bad cyder. Late apples are in general to be preferred. With regard to the proper soil for raising apple trees, the reader may consult with advantage an able essay upon "The Cultivation of Orchards and the making of Cyder and Perry," by Frederick Falkner, Esq., in the fourth volume of the Royal Agricultural Journal. He adverts judiciously to the necessity of the presence of alkaline and earthy bases in the soils of all deciduous trees, and especially of such as produce acid fruits.

CYMOLE. $C^{21}H^{14}$. Syn. Camphogen. A hydrocarbon found in oil of cuminine in coal naphtha. See CARBURETTED HYDROGEN.

CYMOPHANE. A variety of Chrysoberyl, which exhibits a peculiar milky or opalescent appearance. When cut *en cabochon*, it shows a white floating band of light, and is much prized as a ring stone.—H. W. B.

END OF THE FIRST VOLUME.

LONDON
PRINTED BY SPOTTISWOODE AND CO.
NEW-STREET SQUARE

Digitized by Google

Digitized by Google

Digitized by Google

HB 1PAW 4

Digitized by Google